RUSSIAN MARITIME REGISTER OF SHIPPING

RULES

FOR TECHNICAL SUPERVISION DURING CONSTRUCTION OF SHIPS AND MANUFACTURE OF MATERIALS AND PRODUCTS FOR SHIPS

PART IV

TECHNICAL SUPERVISION DURING MANUFACTURE OF PRODUCTS

ND No. 2-020101-139-E

St. Petersburg
2021

Rules for Technical Supervision during Construction of Ships and Manufacture of Materials and Products for Ships have been approved in accordance with the established approval procedure and come into force on 1 January 2021.

The present edition is based on the latest version of the Rules, 2020.

The Rules are published in the following parts:

Part I "General Regulations for Technical Supervision";

Part II "Technical Documentation";

Part III "Technical Supervision during Manufacture of Materials";

Part IV "Technical Supervision during Manufacture of Products".

The Rules are published in electronic format in Russian and English.

REVISION HISTORY[1]

(Purely editorial amendments are not included in the Revision History)

Amended paras/chapters/sections	Information on amendments	Number and date of the Circular Letter	Entry-into-force date
Para 3.5.1.6	Requirements have been specified regarding A1.4.4.2, IACS UR A1 (Rev.6 Oct 2016) (Corr.2 Mar.2017)	314-18-1533c of 25.03.2021	01.05.2021
Para 3.6.1	Requirement has been aligned with the Nomenclature of Items of the Register Technical Supervision	314-18-1533c of 25.03.2021	01.05.2021
Para 3.7.6	Requirement has been aligned with the Nomenclature of Items of the Register Technical Supervision	314-18-1533c of 25.03.2021	01.05.2021
Appendix 3 to Section 3	Text of Appendix has been amended in accordance with A1.4.4, IACS UR A1 (Rev.6 Oct 2016) (Corr.2 Mar.2017)	314-18-1533c of 25.03.2021	01.05.2021
Para 6.1.8	The scope of the delivered blanks and components has been specified	313-67-1515c of 04.03.2021	01.05.2021
Para 7.1.8	The scope of the delivered components has been specified	313-67-1515c of 04.03.2021	01.05.2021
Table 10.1.2-1	Requirements for transformators have been specified, requirements for radio-frequency interference filters have been deleted	315-05-1492c of 29.12.2020	01.01.2021
Table 10.1.2-2	Requirements for transformators have been specified, requirements for radio-frequency interference filters have been deleted	315-05-1492c of 29.12.2020	01.01.2021
Para 10.2.1.1	The reference to the non-existing para has been deleted	315-05-1492c of 29.12.2020	01.01.2021

[1] Amendments and additions introduced at re-publication or by new versions based on circular letters or editorial amendments.

Amended paras/chapters/sections	Information on amendments	Number and date of the Circular Letter	Entry-into-force date
Para 10.2.1.5	The wording of the para has been specified	315-05-1492c of 29.12.2020	01.01.2021
Para 10.4.3.3	Note 3 has been specified	315-05-1492c of 29.12.2020	01.01.2021
Table 10.4.6.2.1	Requirements for transformators have been specified	315-05-1492c of 29.12.2020	01.01.2021
Para 10.4.6.2.3	The para has been deleted	315-05-1492c of 29.12.2020	01.01.2021
Para 10.4.6.4	The para has been renamed	315-05-1492c of 29.12.2020	01.01.2021
Para 10.4.6.4.1	Requirements for the lighting accessories have been deleted	315-05-1492c of 29.12.2020	01.01.2021
Para 10.4.6.5.2	The para has been amended for the application of tachometers	315-05-1492c of 29.12.2020	01.01.2021
Para 10.4.6.8.1	The reference to the para of the Rules has been replaced	315-05-1492c of 29.12.2020	01.01.2021
Para 10.5.1.1	Requirements for radio-frequency interference filters have been deleted	315-05-1492c of 29.12.2020	01.01.2021
Para 10.5.1.2	The reference to the applicable standards has been supplemented	315-05-1492c of 29.12.2020	01.01.2021
Para 10.5.4.1.1	New para specifying requirements regarding tests for heat stability has been introduced	315-05-1498c of 14.01.2021	15.02.2021
Table 10.5.5.1.3	The reference to the applicable requirements has been replaced	315-05-1492c of 29.12.2020	01.01.2021
Chapter 10.7	Paras 10.7.13 — 10.7.13.4 have been deleted. Paras 10.7.14 — 10.7.19.4 and Tables 10.7.14.1, 10.7.15.1, 10.7.16.1, 10.7.17.1 and 10.7.19.1 have been renumbered accordingly	315-05-1492c of 29.12.2020	01.01.2021
Para 10.7.1.10.5	The measuring units of the electric machines power have been amended	315-05-1492c of 29.12.2020	01.01.2021

Amended paras/chapters/sections	Information on amendments	Number and date of the Circular Letter	Entry-into-force date
Table 10.7.2.1	Item 2 has been deleted	315-05-1492c of 29.12.2020	01.01.2021
Table 10.7.6.1	The requirements for electromagnetic brakes of electric motors, brake electromagnets, electro-hydraulic pushers. Footnote "12" has been deleted. Existing footnote "13" has been renumbered. New footnote "13" has been introduced	315-05-1492c of 29.12.2020	01.01.2021
Table 10.7.13.1 (renumbered)	The requirements for tachometers of propeller shafts have been deleted. The footnotes have been amended and renumbered	315-05-1492c of 29.12.2020	01.01.2021
Table 10.7.14.1 (renumbered)	The requirements for coaxial cables and mounting wires have been deleted. The footnotes have been renumbered	315-05-1492c of 29.12.2020	01.01.2021
Table 10.7.16.1 (renumbered)	The requirements for boilers and water heaters (including the flowing ones), as well as cooking ranges, boilers and units have been deleted. The footnotes have been amended and renumbered	315-05-1492c of 29.12.2020	01.01.2021
Table 10.8.4-1	Footnote "4" as to the electric motors measuring units has been amended	315-05-1492c of 29.12.2020	01.01.2021
Table 10.8.4-2	Requirement for limit switches, electromagnetic brakes of electric motors, brake electromagnets, electrohydraulic pushers and radio-frequency interference filters have been deleted. The footnotes have been amended and renumbered	315-05-1492c of 29.12.2020	01.01.2021
Para 10.8.5	The wording has been specified	315-05-1492c of 29.12.2020	01.01.2021

Amended paras/chapters/sections	Information on amendments	Number and date of the Circular Letter	Entry-into-force date
Para 1 of Appendix 1	The power measuring units of electric machines have been amended	315-05-1492c of 29.12.2020	01.01.2021
Items 1 and 2 of Table 1, Appendix 2	The power measuring units of electric machines have been amended	315-05-1492c of 29.12.2020	01.01.2021
Appendix 4	The Appendix has been renamed. The requirements for electromagnetic brakes have been deleted.	315-05-1492c of 29.12.2020	01.01.2021
Appendices 10 — 17	Existing Appendix 10 has been deleted. Existing Appendices 11 — 18 have been renumbered 10 — 17, accordingly	315-05-1492c of 29.12.2020	01.01.2021

1 GENERAL

1.1 APPLICATION

1.1.1 The provisions of this Part apply in the technical supervision during manufacture of products subject to the technical supervision of the Register according to the RS Nomenclature given in Appendix 1 to Part I "General Regulations for Technical Supervision".

1.1.2 The provisions of this Part may be applied with due regard for details and distinctions in the processes of products manufacture, which are inherent in the country wherein the Register carries out technical supervision.

1.2 TERMS AND DEFINITIONS, ABBREVIATIONS

1.2.1 Terms and their definitions, abbreviations are given in Part I "General Regulations for Technical Supervision".

1.3 THE SCOPE OF TECHNICAL SUPERVISION

1.3.1 The scope of supervisдion is specified according to the provisions given below in this Section. The scope of supervision for specific types of products is given in Sections 3 to 17.

1.3.2 In the process of product design and production launching, the Register generally carries out supervision during the following:

.1 development of technical and normative-technical documentation;

.2 manufacture and tests of production prototypes (pilot specimens) of the product.

1.3.3 In supervision performance, the Register takes into account the requirements of the current standards establishing the procedure for development of technical documentation and testing of products at stages of their manufacture.

The Register does not form part of inspection boards and carries out its functions in the course of tests according to the test program approved and technical documentation keeping under control the fulfillment of the RS requirements. The Register relevant documents are executed according to the supervision results.

1.3.4 In development of a product and launching its production, some particular stages of design documentation development or work stages may be ignored (depending on product complexity or novelty), this is generally to be agreed in the technical documentation for the product.

1.3.5 Considering the possibility of use on ships the products manufactured without the RS technical supervision, 5.7, Part I "General Regulations for Technical Supervision" shall be single approval shall be made in compliance with. When the product was manufactured without the RS technical supervision, but the documents of another classification society, issued without the RS authorization, are provided, 2.16, Part I "General Regulations for Technical Supervision" shall be followed.

1.4 TECHNICAL DOCUMENTATION

1.4.1 General.

1.4.1.1 General provisions on the Register technical supervision during development of technical documentation, including the provisions on the execution of its review results, validity periods of approval and on amendments to the technical documentation approved, are set forth in Part II "Technical Documentation".

1.4.1.2 This Chapter specifies the procedure for submitting technical documentation for products to the Register, as well as the procedure for the Register reviewing separate types of documents at various stages of technical documentation development.

1.4.1.3 The technical documentation for products is submitted to the Register for review and approval according to 5.1, Part II "Technical Documentation" in the scope specified in the relevant parts of the RS rules (for the list of the Register rules, refer to 1.3, "General Regulations for the Classification and Other Activity").

1.4.1.4 The product names "production prototype (first lot)" and "pilot specimen (pilot lot)" are introduced by a developer under the agreement with a customer and the Register.

1.4.1.5 When engines are produced under a license according to the licensor's documentation approved by the Register, a licensee shall submit for the Register reviewing the list of drawings according to 1.2, Part IX "Machinery" of the Rules for the Classification and Construction of Sea-Going Ships specifying the drawing numbers assigned and the licensor's relevant drawing numbers.

Where the licensor introduces minor changes in a design, the relevant documents about this shall be submitted to the Register for approval. In the event of major changes in the design, the licensor's confirmation shall additionally be submitted to the Register. In any case, the licensee shall submit the full set of approved documents to the Register.

1.4.2 Performance specification, concept design, sketch design.

1.4.2.1 These documents are reviewed by the Register at its discretion only when radically new structural designs are implemented. However these documents need neither approval nor agreement. Proceeding from the review results, the Register draws up a written conclusion (reference) with the recommendations or requirements (if needed) to be taken into account by a designer in the following development of a product (refer to 3.6, Part II "Technical Documentation").

1.4.3 Technical design.

1.4.3.1 Proceeding from the technical design review, a conclusion letter is drawn up wherein the following shall be specified:

.1 technical requirements (if any) to be met and taken into account by a designer at the following stages of working documentation development and product manufacture;

.2 the RS Branch Office authorized to review and approve the working documentation, as well as to verify the implementation of comments and requirements on the technical design;

.3 the RS Branch Office authorized to supervise the manufacture of the prototype (pilot specimen) and first (pilot) lot production;

.4 participation of the RHO representative (if needed) in acceptance tests of the product prototype (pilot specimen);

.5 deviations (if any) from the rules requirements permitted by the Register according to 1.4.3.2.

The conclusion letter copies shall be sent to the RS Branch Offices specified in 1.4.3.1.2 and 1.4.3.1.3.

1.4.3.2 Deviations from the rules requirements are considered by the RHO if formally addressed by a developer with the justification of the deviations made and proposals for implementing pertinent structural measures or alternative decisions.

1.4.3.3 With the positive conclusion on the technical design including the comments and requirements available whose implementation can be permitted by the Register at the subsequent stages of product development (refer to 1.4.3.1.1), the technical design documentation is approved and the appropriate Register stamps are put on the documents according to Section 8, Part II "Technical Documentation".

1.4.3.4 With the negative conclusion, i.e. the engineering design cannot be approved due to a failure to meet the Register requirements on key issues, the technical design documentation is returned to a designer for modification (for taking into account the Register requirements set forth in the conclusion letter whose implementation cannot be rearranged to other stages of product development).

1.4.4 Detailed (design) documentation.

1.4.4.1 The detailed (design) documentation for a product is submitted to the Register for review and approval at the stage of pilot specimen/production or prototype (if pilot specimen development is not provided for) development.

Hereinafter, only those detailed (design) drawings are submitted for the Register approval which were amended according to the results of manufacturing and testing the production prototype (pilot specimen) or products of the first-off production batch, as well as in case of the change of a serial products design.

1.4.4.2 The detailed (design) documentation is submitted to the RS Branch Office authorized by the RHO for its approval (refer to 1.4.3.1.2).

If manufacturing the product prototype (pilot specimen) is supervised by another RS Branch Office, one set of the approved detailed (design) documentation shall be forwarded to that RS Branch Office (refer to 1.4.3.1.3).

1.4.4.3 The detailed (design) documentation shall be approved with no outstanding comments, i.e. all the requirements of the RS rules and the requirements set forth in the conclusion letter on the technical design (refer to 1.4.3.1.1) shall be taken into account in the detailed (design) documentation.

1.4.5 Technical specification.

1.4.5.1 Technical specification shall generally be submitted for review as part of the product technical design. In the absence of design documentation (if not developed), the technical specification shall include the full package of the Register requirements for the given product.

1.4.5.2 Generally, the content of technical specification is determined by the adopted standardization system, but in any case, for the Register supervised products they shall include the following instructions on:

.1 product conformity with the RS requirements;

.2 necessity of the Register approval for the technical documentation for products including test programs;

.3 necessity of the Register supervision during products manufacture and tests.

1.4.5.3 The technical specification shall be approved with no outstanding comments, i.e. all the findings identified in the technical specification review shall be taken into account in the text of the technical specification prior to their approval. With the outstanding comments, the conclusion letter is drawn up without approval stamping the technical specification.

1.4.5.4 The technical specification amended according to the results of testing the product prototype (pilot specimen) shall be submitted again for the Register approval, or a notice shall be issued approved by the Register concerning the alterations made in the technical specification.

1.4.5.5 The technical specification absence, while the necessary information is available, does not impede the review and approval of documentation for a set number of products.

In such cases the documentation is subject to the single approval (refer to 8.7, Part II "Technical Documentation").

1.4.6 Test program.

1.4.6.1 The program of product prototype (pilot specimen) testing is reviewed and approved by the RHO or RS Branch Office (refer to 5.1, Part II "Technical Documentation").

1.4.6.2 The program of product operational testing onboard ship is generally reviewed and approved by the RHO.

In particular cases, the RHO can delegate the review and approval of the program of product operational testing to the RS Branch Office.

1.4.6.3 The programs of first-off production batches and serial products testing are reviewed and approved by the RS Branch Office supervising products manufacture.

1.4.6.4 The test programs shall generally provide for the following:

.1 verification of product conformity with the Register approved drawings, technical conditions and standards;

.2 determining product quality indices regulated by the Register;

.3 functional tests;

.4 duration and conditions of tests, including measurements in testing;

.5 means of control and limiting deviation values;

.6 examinations and inspections;

.7 check tests after inspection (if needed);

.8 methodical instructions on test performance (test procedure may be submitted as a separate document which shall be indicated in the test program).

1.4.6.5 With the positive review results, the Register appropriate approval stamp is put on the front page of the test program.

1.4.6.6 The test programs reviewed by the RHO may be approved with the outstanding comments or requirements given in the conclusion letter wherein the RS Branch Office in charge of their implementation control is also specified.

1.5 PRODUCT PILOT SPECIMEN

1.5.1 This Chapter contains the regulations on supervision during manufacture and testing pilot specimens (batches) or single products.

1.5.2 Use of pilot specimens on ships, if agreed with a shipowner, shall be approved by the Register.

1.5.3 Tests of pilot specimens and single products are carried out under the Register supervision according to the approved program.

1.5.4 The technical supervision during manufacture and testing pilot specimens is carried out by the RS Branch Office. The participation of the RHO representative is agreed in the reviewing of the test program.

1.5.5 Prior to testing product pilot specimen, a firm (manufacturer) submits to the Register:

.1 pertinent technical documentation approved by the Register, the test program inclusive;

.2 the Register documents confirming the manufacture of components under the Register supervision;

.3 item under test;

.4 test, measuring and inspection equipment;

.5 results of preliminary tests of a pilot specimen at the firm (manufacturer); procedure for the above tests if needed;

.6 document of a firm's (manufacturer's) control body on readiness for testing.

1.5.6 Based on the outcome of the familiarization with the documents and equipment specified in 1.5.5, the Register takes decision on a possibility to supervise product specimen testing.

1.5.7 If the check of a pilot specimen according to an approved program is not deemed feasible, separate items of the bench test program for the pilot specimen, if agreed with the RHO, may be carried over to the extended program of the ship mooring and sea trials. Tests performance onboard the ship shall be pre-arranged by the product manufacturer with the shipyard and its customer.

1.5.8 If the product has failed any test and its design has been properly modified, the tests shall be repeated. The conclusion of a firm (manufacturer) on causes of unsatisfactory tests shall be submitted to the Register.

When justified, only those tests affected by the modifications made may be repeated.

1.5.9 If pilot specimen tests have not adequately confirmed the product conformity with the Register approved technical documentation, the product is not approved for use onboard.

1.5.10 On tests completion, a report on survey of the pilot specimen on an established form is drawn up. The following shall be indicated in the report conclusion:

.1 conformity (non-conformity) of the given product specimen with the RS requirements;

.2 approval (disapproval) of the given product specimen for use onboard ship if intended for this purpose;

.3 requirements (if needed) on the relevant updating of technical documentation;

.4 necessity to carry cut operational tests of the specimen if those are specified in 1.8.

1.5.11 The Register issues certificates for product pilot specimens approved for use onboard ship. In this case:

.1 if the pilot specimen is subject to operational tests (refer to 1.5.10.4), the report is a mandatory appendix to the certificate which shall be duly noted in the latter;

.2 where the tests are carried out in two stages (test bench-ship: refer to 1.5.7), on completing the first stage, the report on pilot specimen survey is drawn up with a conclusion on the approval of the specimen for the second stage of test onboard ship. In this case, the report is a mandatory appendix to the certificate which shall be duly noted in the latter.

The report on pilot specimen tests onboard ship is drawn up with due regard for the report on the results of the first stage of tests. With the positive results of tests at the second stage, the fulfillment of requirements at this stage is specified in the certificate.

1.5.12 With the positive results of the firm's (manufacturer's) bench tests for product (batch) pilot specimens other than those, which are independent functional units, the report on (batch) pilot specimen survey is drawn up with a conclusion on the approval of the (batch) specimen for further testing as part of the equipment the product is intended for.

In this case, the final conclusion is made on completing tests of the main product fitted with the specimen.

1.6 PRODUCT PROTOTYPE

1.6.1 This Chapter contains the regulations on supervision during manufacture of a product prototype.

1.6.2 The necessity in supervision of the prototype is determined in review and approval of documentation.

1.6.3 If the mandatory drawing up of Type Approval Certificate is specified in column 4 of the RS Nomenclature, the technical supervision of the prototype of such product is carried out by the RHO or RS Branch Office as authorized by the RHO.

1.6.4 Prior to the beginning of prototype testing, the firm (manufacturer) submits to the Register:

.1 documentation specified in 1.5.5;

.2 product prototype test results, if any;

.3 data on the product previous use, if relevant.

1.6.5 According to the results of the technical supervision of the prototype with due regard to the mandatory Type Approval Certificate, the latter is drawn up taking into account the provisions of 1.6.3 or Certificate of Conformity, in single approval.

1.6.6 With the unsatisfactory results of testing the product prototype to be provided with Type Approval Certificate, the Report is drawn up to state that the product has failed the tests and is not approved for use onboard ship. The requirements are put forward in the Report, which shall be met for product retesting approval.

1.7 SERIAL PRODUCTS AT ESTABLISHED PRODUCTION

1.7.1 This Chapter contains the regulations on supervision during manufacture and tests of serial products at established production.

1.7.2 The Register supervision during manufacture and tests of serial products at established production is carried out in accordance with the requirements of the relevant Sections of this Part of the Rules and the RS Nomenclature.

1.7.3 Serial products are tested according to the Register approved normative and technical documentation or the Register approved test program.

1.7.4 In the course of serial production, products can be periodically tested in accordance with the requirements of the normative and technical documentation agreed.

1.7.5 According to the Register supervised periodical tests results, the Report is drawn up to confirm the conformity of the product with the RS requirements, the stability of the Register regulated properties and characteristics.

If the product periodical tests were carried out without the Register supervision due to its decision, a firm (manufacturer) shall submit test results to the Register for review.

1.7.6 If the serial product is modified so that the Register regulated properties and characteristics are affected, the first product modified shall be tested according to the Register approved program. These tests may be combined with the firm's (manufacturer's) type tests of the product.

The scope of tests is specified by the Register in each case with due regard to the specific character and scope of the changes made, and for the production conditions.

1.7.7 According to the results of testing after the modification (refer to 1.7.6), the Report is drawn up to confirm the conformity of the modified product with the Register requirements and feasibility of its further manufacture under the Register technical supervision.

1.7.8 Following the results of the technical supervision of serial products, the RS documents are drawn up according to the RS Nomenclature and the provisions of Part I "General Regulations for Technical Supervision".

1.8 OPERATIONAL TESTS OF PRODUCTS

1.8.1 Operational tests of a product onboard ship are carried out to confirm the product conformity with the RS requirements for operational conditions.

The product tests onboard ship according to the program of mooring and sea trials are not considered as operational tests.

1.8.2 The following products are subject to operational tests:

.1 as specified by a developer or shipowner for checking in the course of the trial operation on ships;

.2 as required by the Register;

.3 according to the RS rules requirements.

1.8.3 Product operational tests are specified in cases when comprehensive test bench trials of the ultimately new design product specimen is not deemed feasible and therewith there is no reliable operational experience in use of similar products on ships. In this case, the test bench trials cannot be replaced by calculations.

1.8.4 The conditions to be observed in operational tests onboard ship shall be specified in the test program developed by the product designer (manufacturer), agreed with a shipyard and shipowner, and approved by the RHO or RS Branch Office as authorized by RHO.

The program shall include the following:

product name and its purpose onboard ship;

name of the ship engaged in test performance;

number of products onboard the ship;

test objective;

tests conditions and duration;

types of measurements, surveys and their frequency;

instructions on product submitting for the Register survey.

1.8.5 The necessity of product operational tests performance in accordance with the approved program shall be specified in the relevant report while drawing up Register ship's documents after completion of mooring and sea trials.

1.8.6 On completion of operational tests, a designer (manufacturer) submits to the Register, according to the location of a product survey onboard ship, the records on these tests wherein the accomplishment of the tests program approved shall be confirmed and the following shall be specified:

test results;

number, nature and causes of failures;

designer's and customer's opinion on the product according to the operational test results.

The total duration of operational tests shall not include the time when the ship was out of service.

1.8.7 On completion of operational tests, a report on product survey is drawn up to specify the results of operational tests and to infer on the product further application feasibility onboard in accordance with the product designated purpose.

1.8.8 With the unsatisfactory results of intermediate product surveys at any stage of operational tests performance, the Register discontinues the supervision of tests and in each particular case takes a final decision on the given product specimen after reviewing the operational tests materials submitted in accordance with 1.8.6, as well as on the conditions of the ship further operation.

2 HULL

2.1 GENERAL

2.1.1 The provisions of this Section apply in the technical supervision during design and manufacture of parts, units, panels and other hull components, if they are manufactured as separate products for delivery to the shipyard where the ship's hull is built, including hull structures being independent assembly units or parts thereof in modular (modular and unit- type) construction of ships.

2.1.2 Supervising the manufacture of hull products, the requirements of Section 2 of the Guidelines on Technical Supervision of Ships under Construction.

2.1.3 Concluding the contract on the Register supervision during manufacture of hull products, the contract between a shipyard – customer and supplier of products shall be submitted to the RS Branch Office, as well as other documentation on the terms of the order. If these latter do not ensure proper continuity in ensuring hull construction quality or performing supervision functions by the Register, the right to impose the additional requirements upon order terms in the supervision contract is reserved to the RS Branch Office.

2.1.4 Products for ship's hulls at the firm (manufacturer) are considered as finished product. They shall be fully checked by the firm's (manufacturer's) technical control body and provided with the documents issued.

2.1.5 The Surveyor effects the survey or products according to the list of supervision items[1] drawn up to fit the conditions of the firm (manufacturer) (refer to 12.2, Part I "General Regulations for Technical Supervision").

2.1.6 Additionally to agreeing with the Register, changes and deviations from the approved technical documentation for products shall be agreed with a ship-yard and a document about this shall be submitted to the Surveyor.

2.1.7 The firm's (manufacturer's) technical control body shall issue the document of an established form for a finished product.

The product shall be provided with the Register certificate or firm's (manufacturer's) document confirmed by the surveyor wherein the essentials of the product are given: name, purpose, characteristics including dimensions and other data on materials, drawings and other technical documentation. Additionally, the pertinent technical materials are attached: expansion, margin diagram, results of weld control and necessary tests, as well as the documents on deviations and replacements made and agreed with the Register, etc. To be also attached for castings and forgings are the results of a chemical composition analysis, testing mechanical properties of material, and the data on heat treatment. The document form for the product and the list of appendices thereto shall be agreed with the Register for each type of products.

1 Hereinafter referred to as "the list of items".

3 EQUIPMENT, ARRANGEMENTS AND OUTFIT

3.1 GENERAL

3.1.1 The provisions of this Section apply in technical supervision during design and manufacture of equipment, arrangements and outfit listed in the RS Nomenclature.

3.1.2 The Section contains the technical supervision requirements during manufacture of preproduction and serially produced articles of equipment, arrangements and outfit in steady production.

3.1.3 The materials used for manufacture of products shall comply with the requirements of Part III "Equipment, Arrangements and Outfit" and Part XIII "Materials" of the Rules for the Classification and Construction of Sea-Going Ships.

3.1.4 The general provisions on the organization of technical supervision during manufacture of articles specified in 3.1.1 are given in Part I "General Regulations for Technical Supervision", on technical documentation, in Part II "Technical Documentation".

3.2 REGISTER SUPERVISION

3.2.1 The technical Supervision during manufacture of equipment, arrangements and outfit products is carried out at the firm (manufacturer) in case a contract has been made between the Register and manufacturer or the applications according to Section 4, Part I "General Regulations for Technical Supervision".

3.2.2 The Register issued documents are specified in the RS Nomenclature.

3.2.3 The technical supervision is effected by surveying according to the list of items being the main working document of the supervision.

3.2.4 The list of items is developed by the manufacturer based on the RS Nomenclature and Table 3.2.4 for each preproduction (one-off) article of equipment, arrangements and outfit, and also for serially-produced articles, and is agreed with the RS Branch Office.

Table 3.2.4

Nos.	Item of technical supervision	Verification of technical documentation	Control of material		Visual examination	Measurements control	Control of flow detection	Tests				Control of operation
			Register certificates and/or other documents	Marking, stamping				hydraulic	dropping	breaking	proof load	
1	**Rudder and steering gear:**											
1.1	rudder stocks including their flanges	+	+	+	+	+	+[1]					
1.2	rudder shafts including their flanges	+	+	+	+	+						
1.3	rudder blade and steering nozzle in assembly	+	+	+	+	+	+	+				
1.4	rudder and steering nozzle pintles	+	+	+	+	+						
1.5	tillers, rudder quadrants	+	+	+	+	+	+[2]					
1.6	emergency steering gear	+	+	+	+	+						+
1.7	active means of ship's steering	+	+	+	+	+						+
2	**Anchor arrangement:**											
2.1	Anchors	+	+	+	+	+	+		+[3]		+	+
2.2	anchor chains and parts of their coupling	+	+	+	+	+				+	+	+
2.3	anchor stoppers	+	+	+	+	+						+
2.4	device for securing and releasing the inboard end of the chain cable or rope	+	+	+	+	+						+
2.5	anchor hawses[4]											
3	**Towing and emergency towing arrangement:**											
	Tow hooks and rails with fastenings for their securing to ship's hull, tow line releasing device, chain devices, tow lines, tow securing arrangements	+	+	+	+	+					+	+

Nos.	Item of technical supervision	Verification of technical documentation	Control of material		Visual examination	Measurements control	Control of flow detection	Tests				Control of operation
			Register certificates and/or other documents	Marking, stamping				hydraulic	dropping	breaking	proof load	
4	**Openings in hull, 1st and 2nd tiers of superstructures and deckhouses, and their closing appliances:**											
4.1	side and flush deck scuttles, round and rectangular wheel house windows	+	+	+	+	+		+				+
4.2	doors in outside plating	+	+	+	+	+	+	+[4]				+
4.3	outside doors in superstructures and deckhouses	+	+	+	+	+		+				
4.4	covers of companion hatches, skylights and ventilation trunks	+	+	+	+	+	+	+				+
4.5	doors in subdivision bulkheads	+	+	+	+	+	+	+				+
4.6	hatch covers of dry cargo holds fitted for alternate carriage of bulk liquid and dry cargoes, of tweendecks, and also of cargo tanks	+	+	+	+	+						+
5	**Arrangements for securing decks, platforms, ramps and other similar structures when unused**	+	+	+	+	+						+
6	**Ship's steel, fiber and synthetic wires of all applications**	+	+	+	+	+				+	+	
7	**Studless chains used in ship's arrangements the anchor ones**	+	+	+	+	+				+	+	

[1] For welded flanges.
[2] At tiller mass over 100 kg.
[3] Not applicable for welded and forged anchors
[4] Technical supervision is effected according to Section 2 of this Part and Section 2 of the Guidelines on Technical Supervision of Ships under Construction.

The RS Branch Office can change the list of items to extend the scope of control or for its cutting being guided therewith by production conditions and products quality, as well as by the results of supervision during the ship construction and operation.

3.2.5 Surveys according to the list of items are carried out by the surveyor after the firm's (manufacturer's) technical control body presents the technical supervision item finished and provided with the documents issued therefore or the completed scope of works finally checked by the firm (manufacturer) and ready to be presented to the Register.

The main objective of surveys according to the list is the final check of the technical supervision item in the condition of full readiness and its approval for subsequent fitting in an arrangement and for use for equipment and outfit.

The scope of technical supervision and the prescribed types of checks, examinations and inspections performed by the surveyor in surveying technical supervision items according to the list are given in Table 3.2.4.

Depending on the conditions of the Register technical supervision, the surveys as per Table 3.2.4 are effected by the surveyor or personnel of the firm's (manufacturer's) technical control body.

Moreover, the checks, examinations and inspections specified in the Table are carried out by the surveyor in surveys of manufacturers.

To control the observance of the Register technical supervision conditions by a firm (manufacturer) or to check the terms of Agreement on Supervision or Contract on Supervision, the provisions of Section 4, Part I "General Regulations for Technical Supervision" shall be followed.

3.2.6 Periodical inspections are carried out by the surveyor irrespective of the list of items and not related to the formal presentation by the manufacturer's technical control body. Special consideration in their performance shall be given to the identification of drawbacks and flaws that cannot be detected in surveys as per the list after completing the relevant works.

The instructions on periodical inspections performance are given in appropriate Chapters of the Section. However, they may be extended proceeding from specific conditions.

In surveying, the following shall be effected:

.1 review of technical documentation, i.e. availability of:

approved (agreed) technical documentation relating to the technical supervision item under survey (working drawings, technological processes, standards and other normative and technical documents);

permits or other documents allowing deviations from drawings or other technical documentation agreed with the Register;

documents of the technical control department for the products presented, which include pertinent data on the operational control performed in accordance with the technical documentation requirements;

.2 inspection of material: verification of availability of the Register certificates and stamping in the cases specified in the RS Nomenclature, and/or of other documents for the material and marking; establishing the correspondence of material brands with those specified in technical documentation;

.3 visual examination: verification of products conformity with technical documentation, of absence of external defects whose character and permissible value exceed those specified in appropriate chapters of this Section; when necessary, the examination with disassembly in a scope agreed with the surveyor is carried out; for welded structures, welds are checked;

.4 control of measurements: verification of main dimensions using devices and instruments ensuring the necessary measurement accuracy (with the main dimensions are classed the product dimensions regulated by the RS Rules and requirements specified in technical documentation); for welded structures, weld dimensions are checked;

.5 control of flaw detection: verification of the weld flaw detection results obtained in use of X-ray, gamma-ray, ultrasonic and other approved methods;

.6 tests: hydraulic, dropping, breaking and proof load;

.7 inspection in operation: functional check-out of products, as well as the check of mobility of product parts in compliance with the requirements of technical documentation and the instructions of relevant chapters of this Section.

3.2.7 In addition to surveys (as per the list of items), the surveyor effects inspections not associated with the formal presentation of a finished technical supervision item by the firm's (manufacturer's) technical control body.

Periodical inspections are carried out in the course of production at intermediate stages of products manufacture.

In so doing, special consideration shall be given to the identification of drawbacks and flaws that cannot be detected in surveying (as per the list of items) the finished product.

Instructions on periodical inspections performance are given in appropriate chapters of this Section. The RS Branch Office can extend them or specify with due regard for specific conditions of production.

Additionally to the requirements of 3.2.4, the results of periodical inspections are used in handling the problems of concluding Agreement on Supervision and of keeping the terms of its validity.

3.2.8 In performance of periodical inspections, the Surveyor determines the character and number of samples, specimens and check inspections proceeding from specific production conditions, quality of work performance, details and importance of the technical supervision item and its components, provided the requirements of rules and this document are met.

3.2.9 Prior to the beginning of serial production of arrangements, equipment and outfit products under the surveyor's technical supervision, the production prototype and the first-off production series of products in amounts agreed between the manufacturer and the RS Branch Office shall be manufactured and tested.

In manufacturing the production prototype (first-off production series), detailed periodical inspections are carried out. Separate checks, examinations and inspections carried out periodically in serial manufacture of products shall be included for the preproduction series (production prototype) in the list and to be presented to the Surveyor in survey according to the list.

The Surveyor shall make sure that the firm (manufacturer) has mastered the procedure adopted for manufacturing products, and with the positive results of specified surveys, to settle the question of potential supply of products under steady production for the ships being subject to the Register technical supervision.

3.3 DOCUMENTATION

3.3.1 Prior to the beginning of manufacture of arrangements, equipment and outfit products, the firm (manufacturer) delivers to the RS Branch Office the Register approved (-agreed) technical documentation for the technical supervision item according to 3.2.4, Part I "Classification" and 1.3.4, Part III "Arrangements, Equipment and Outfit" of the Rules for the Classification and Construction of Sea-Going Ships.

3.3.2 Approval of technological processes for manufacture of products at large, as well as for welding, heat treatment and assembly of essential parts and units is effected by the RS Branch Office.

3.4 RUDDER AND STEERING GEAR

3.4.1 Manufacture of products and the related parts specified in Table 3.2.4 is subject to the Register supervision.

3.4.2 In survey according to the list, in addition to the requirements of Table 3.2.4, attention shall be drawn to the following.

3.4.2.1 In a rudder blade or steering nozzle manufacture, the following is checked:

.1 fastening to the rudder blade of the flange for coupling with the rudder stock, and of hinges for pintles;

.2 fastening to the steering nozzle of the flange, welded-in bush and other welded-in parts for coupling of the nozzle with the rudder stock and pintle, as well as fastening of the fin to the nozzle;

.3 absence of abrupt changes for structure cross-sections;

.4 tightness of the structure according to Appendix 1 to Part II "Hull" of the Rules for the Classification and Construction of Sea-Going Ships;

.5 anticorrosive protection of products according to instructions or their filling with a filler if the Register imposes special requirements.

3.4.2.2 In rudder stock, rudder shafts and pintles manufacture, the following is checked:

.1 quality in making keyways, of keys adjustment, shank thread, nuts, tapered ends and fixing devices;

.2 fastening to the rudder stock of the flange for coupling with the rudder blade flange;

.3 material of rudder stock, rudder shaft and pintle liners, absence of liner defects and quality of their fit to mounting surfaces after cooling down; in built-up welding of bearing journals – quality of the built- up welding;

.4 sealing liner ends.

3.4.2.3 In shop assembly of flange and cone couplings of rudder blades or steering nozzles with rudder stocks and pintles, as well as of rudder post and stern frame couplings, the following is checked:

.1 quality of rudder stock and pintle cones fitting to mounting places in rudder blades or steering nozzles by means of the bluing check; in so doing, any area of 25 mm by 25 mm shall have at least two spots;

.2 quality of keys fitting to keyways in parts being matched;

.3 quality of flanges fitting in couplings of rudder stocks with rudder blades or steering nozzles, as well as of rudder shafts;

.4 quality of machining holes for templet bolts;

.5 alignment of rudder stocks and pintles, rudder blade bearing holes for the rudder shaft after their final assembly with rudders or steering nozzles;

.6 fit of bolt heads and nuts to the flange surface in flange couplings of rudder stocks with rudder blades or steering nozzles, and in rudder shaft couplings, locking of bolts and nuts, fit of pintle and rudder stock nuts to the surface of rudder blade or steering nozzle parts in cone couplings.

3.4.3 The Register technical supervision during manufacture of bushes of pintels and rudder stock bearings, parts for couplings of rudder stocks, of rudder stocks with rudder blades or steering nozzles, a rudder shaft with a stern frame, a tiller or quadrant with a rudder stock, of limiters of putting a rudder blade or steering nozzle over either side with their parts, of parts of roller laying of steering gear and chains of steering ropes is limited to the examination of the relevant technical documentation including firm's (manufacturer's) quality certificates for the above products and certificates for materials thereof.

3.4.4 The periodical inspection of welded metal structures of a rudder blade or steering nozzle is effected according to Section 2 of this Part and Section 2 of Part V "Technical Supervision during Construction of Ships".

3.4.5 Active means of the ship's steering are considered by the Register only in terms of their design, fitting, etc. impact on the ship's general safety. In the event specified in 2.1.3.2, Part III "Equipment, Arrangements and Outfit" of the Rules for the Classification and Construction of Sea-Going Ships, the machinery and propellers of active means of the ship's steering are checked as per 3.2.4, and also proceeding from the additional instructions given by the RS Branch Office depending on the design details and manufacture procedure.

3.5 ANCHOR ARRANGEMENT

3.5.1 Anchors.

3.5.1.1 The manufacture of forged, cast and welded anchors is subject to the Register technical supervision according to Table 3.2.4.

The technical supervision during manufacture of forgings and castings for anchor parts, i.e. flukes, shanks, pin and shackle axles, is carried out according to the Rules requirements.

3.5.1.2 In survey according to the list, the following shall be verified in addition to those specified in Table 3.2.4:

.1 documents on dropping tests;

.2 quality of welded anchors welding;

.3 quality of anchor parts welding: welding-on around the perimeter of anchor shackle pins, stop pins of a Hall's anchor, etc.;

.4 curvature of an anchor shank which shall not be more than 3 mm per 1 m of length;

.5 anchor mass by weighing; in this case, the deviation of a theoretical anchor mass as a unit shall range between – 4 to +7 per cent; in individual cases, the weighing may be selective numbering 5 per cent of all anchors, but not less than two anchors of the same standard size provided the proved models are used.

3.5.1.3 The proof load tensile tests of an anchor and cast anchor shackle are carried out in accordance with Appendix 3.

3.5.1.4 In periodical inspection, the following is checked:

.1 manufacture of anchor parts. In so doing, attention is drawn to absence of cracks, pits, scabs, sand marks and other flaws on the surface of parts, which may impact the anchor strength. Acceptable flaws on cast parts are given in Appendix 1, on forged and welded ones, in the technical requirements of drawings;

.2 observance of the firm (manufacturer) technology for machining and heat treatment of parts for the purpose of detecting possible hidden flaws, and also the causes impairing mechanical properties of metal;

.3 assembly of welded anchors: edge preparation for welding and welding gaps, welding consumables and observance of the basic requirements of welding according to the Rules requirements;

.4 conditions of heat treatment if specified in a production process;

.5 performance procedure and the results of dropping tests of cast and welded anchors or their parts in accordance with Appendix 2.

3.5.1.5 In technical supervision during manufacture of the production prototype and first-off production batch of anchors (refer to 3.2.9), additionally to the surveys specified in 3.5.1.2 to 3.5.1.3, the following is checked:

.1 manufacture of parts;

.2 assembly of welded anchors;

.3 heat treatment;

.4 dropping tests;

.5 validity of sampling to check mechanical properties of metal;

.6 preparation of casting flaws for welding.

3.5.1.6 To admit a high holding power (HHP) or super high holding power (SHHP) anchor as such, comparative tests are carried out in accordance with Section 2 of Appendix 3.

3.5.1.7 With the positive results of an anchors survey, the surveyor checks the marking, puts the Register stamp and issues certificates.

3.5.2 Chain cables and parts of their connections.

3.5.2.1 The manufacture of chain cables, units and parts thereof are subject to the Register technical supervision.

Units and parts of chain cables include:

chain lengths;

common link and enlarged stud link;

end link;

swivel;

end shackle;

connecting shackle;

connecting link.

Studs shall be reliably secured in links by the careful adjustment of touching surfaces. Studs securing by welding is permitted in compliance with the standards approved by the Register. In this case, studs are welded on at one end only that is opposite to the link weld and weld dimensions and welding consumables used shall ensure joint dependability. Flaws may be rectified by welding using the processes and procedure agreed with the RS Branch Office. The welding shall be carried out before the final heat treatment of a chain cable. Technical supervision during the manufacture of hot-rolled and drawn rounds for the fabrication of welded chain cables is carried out according to the Rules requirements.

3.5.2.2 In survey (according to the list), the following shall be verified additionally to the requirements of Table 3.2.4:

.1 certificates of conformity and/or reports with the results of testing the chemical composition and mechanical properties of metal for castings, the presence of a welding procedure approved, certificates of conformity for welding consumables, the RS certificates of approval test for a welder;

.2 results of additional sample tests for macrostructure carried out on surveyor's demand, longitudinal microsections of forged links for checking a seal in the joint zone, etc.;

.3 charts of permit for the deviations made and of flaws elimination;

.4 document on products mass[1];

.5 mating of unit parts in locations of their contiguity to one another and their intermobility when arranged along a straight line, and also at a right angle;

.6 free rotation of the swivel pin in its link;

.7 alignment of holes in the eyes of end and connecting shackles and passage of the pin;

.8 shots length, which shall be within 25 m to 27,5 m;

.9 limiting deviation of a chain cable diameter from a nominal value which shall not exceed those specified in Table 7.1.3.9.1 of Part XIII "Materials" of the Rules for the Classification and Construction of Sea-Going Ships.

The limiting deviations of other geometric dimensions of chain cable links, units and parts shall not exceed ±2,5 per cent of their nominal dimensions. The cross-section area of a link along its longitudinal axis therewith shall be not less than the theoretical cross-section corresponding to a nominal diameter, and a length of any chain cable section consisting of five links, not more than ±2,5 per cent of the nominal length equal to $L = 5l - 8d$, in mm, where l = nominal unit length, in mm, d = gauge, in mm, of this section (a lesser section length is not accepted).

3.5.2.3 In survey according to the list, the following is verified:

in manufacturing welded products:

.1 absence of cracks, segregations, fissures and other defects on the surface of parts after bending;

.2 quality of rag removal in welding locations;

---

[1] Not needed if products mass stability meets the standard.

.3 quality of arc welds (cracks and segregations are not accepted);

.4 securing of studs in links (checked by a hammer test), welding-in of studs (permitted if heat treatment follows);

.5 mating of the link and stud surfaces;

.6 deflection in a longitudinal plane after welding which shall not exceed 2 mm;

.7 butt displacement of ends being welded which shall not exceed:

for chain cables having a diameter

13.....0,7
44 – 62 2,0
14 – 26.....1,0
68 – 81.....2,5
28 – 40 1,5
87 – 102 3,5
over 102 .....4,0;

.8 height of a bead over the outer surface of a link, in mm, which shall not exceed after rag cutting:

for chain cables having a diameter

13 0,8
44 – 62 2,5
14 – 26.....1,0
68 – 81 3,0
28 – 40 1,5
87 – 107 3,5

provided the link width is kept in-tolerance. In this case, the inner rag at studless links shall not exceed 1,5 mm;

.9 locations of welding machine electrodes sticking to a link which shall be dressed. A local recess in dressing over 5 per cent of a link diameter or body thickness is unacceptable;

in manufacturing cast products:

.10 cleaning from moulding materials (gate runners, seams, flashes and other irregularities due to moulding shall be removed, and their locations on castings shall be cleaned);

.11 absence of pinhole porosity, cracks, segregation and other flaws;

.12 depth of gradual fettling as the result of head removal or the height of bulges which shall not exceed 0,05 a chain cable diameter or 1 mm respectively. Casting flaws for products at a depth and of extent of 5 per cent of a part diameter or thickness, as well as pits within one cross-section if their total depth and extent are over 5 per cent of a part diameter or thickness are unacceptable if not welded up;

.13 link displacement in the plane of a joint, in mm, along the transverse axis, which shall not exceed:

for chain cables having a diameter

44 – 50 1,5
78 – 107 3,5
54 – 73 2,5
111 – 152.....4,0

Excessive shoulders therewith shall be fettled, but the cross-section dimensions shall remain unchanged;

in manufacturing stampings:

.14 absence of scale, flashes, cracks, dents, scabs, hair-line cracks and other defects;

.15 absence of gaps between connecting half-links;

.16 fairness of transitions from one half-link to another;

.17 value of a butting plane displacement for the link half-stud from the link axis, which shall not exceed 0,1 its diameter;

.18 local gaps between half-studs, in mm, which shall not exceed:

0,5 for links of 13 – 34 in diameter;

1,0 for links of 37 – 49 in diameter;

2,0 for links of 58 – 62 in diameter.

For chain cables over 62 mm in diameter the gap values are taken according to national and international standards approved by the Register.

3.5.2.4 The tests of anchor chains are subject to the Register technical supervision (refer to 3.6, Part XIII "Materials" of the Rules for the Classification and Construction of Sea-Going Ships).

Prior to the tests beginning, the surveyor shall make sure that: chain-testing presses are recognized by the Register and certified by a competent body; the dimensions of press grippers where they mate with the specimens being tested are close to the dimensions of parts and units the specimens are connected with in the chain cable; the chain-testing presses ensure the gradual and uniform elevation of specimen loading.

3.5.2.5 In periodical inspections, the following is verified:

in manufacturing welded products:

.1 billets, prepared for welding, for the absence of flaws, presence of a shrinkage tolerance, proper edge preparation for welding, quality and finish of the surface of the edges to be welded;

.2 conditions and progress of the welding process;

.3 conditions of products heat treatment;

in manufacturing cast products:

.4 pre-chipping-out of defects to sound metal;

.5 weld preparation of casting flaws over 5 per cent of a part diameter or thickness in depth and extent;

.6 welding consumables used for defects rectification;

.7 process of defects welding up;

.8 conditions of castings heat treatment given the defects (these latter are rectified prior to the heat treatment);

in manufacturing stampings:

.9 dimensions and quality of surfaces of recesses and branches with ring bulges;

.10 percent reduction of the link joint.

3.5.2.6 In technical supervision during manufacturing the first-off production batch (production prototype) of anchor chain cables and parts of their connecting (refer to 3.2.9), additionally to the surveys specified in 3.5.2.2 and 3.5.2.3, are verified:

.1 half-link weld preparation;

.2 heat treatment;

.3 pre-chipping-out of defects and casting flaws weld preparation;

.4 dimensions and quality of surfaces of recesses and branches with ring bulges of stampings.

3.5.2.7 With the positive results of surveying shots and parts of their connecting, the surveyor checks the marking, puts the Register stamp and issues the Certificate of Conformity.

3.5.3 Anchor equipment.

3.5.3.1 The manufacture of anchor or chain cable stoppers and devices for securing and releasing the inboard end of the chain cable is subject to the Register technical supervision.

3.5.3.2 In survey according to the list, the surveyor shall follow the requirements of Table 3.2.4.

3.5.3.3 In test of functioning, the ease of mutual movements of parts, absence of misalignments and seizures (handwheel force shall not exceed 160 N) are checked. Additionally, the trial laying of the chain cable in a friction stopper and locking, the bringing of the first shot link in the device for chain cable securing and releasing are performed.

3.6 MOORING ARRANGEMENT

3.6.1 The Register technical supervision during manufacture of bollards, cleats, fairleads, hawses, rollers and other devices shall include the examination and approval of technical documentation for these products, the survey of the specified products, and the issuance of the relevant certificates.

3.7 TOWING ARRANGEMENT

3.7.1 The Register technical supervision of products and all the related parts is executed according to the requirements of Table 3.2.4.

3.7.2 In test of functioning, the operation of the tow line-releasing device for each tow hook with no pull is checked. The force to open the mechanical lock lever (not to exceed 50 N) is measured.

3.7.3 Testing of tow hooks is carried out according to Appendix 4.

3.7.4 In periodical inspection, a recognized firm (manufacturer) shall ensure the quality control at the relevant stages of product manufacture following the technical documentation approved.

3.7.5 The first towing hook of each standard size made at a given firm (manufacturer) is considered as a production prototype. In technical supervision during manufacture of the production prototype of the towing hook and tow line releasing device (refer to 3.2.9), the provisions set forth in Appendix 4 shall be followed.

3.7.6 The Register technical supervision during manufacture of bitts, bollards, fairleads, hawses, stoppers, rollers, cleats, towing notch blocks and tow rails shall include the examination of the relevant technical documentation for these products, the survey of the specified products and the issuance of the relevant certificates.

3.7.7 The products being part of the emergency towing arrangement are tested according to the Register approved program (refer to 5.7, Part III "Equipment, Arrangements and Outfit" of the Rules for the Classification and Construction of Sea-Going Ships).

3.8 SIGNAL MASTS

3.8.1 The Register supervision during manufacture of masts, metal, wooden and glass-reinforced plastic masting, irremovable parts of masts and their standing rigging is limited to the examination of the relevant technical documentation.

3.9 OPENINGS IN HULL, SUPERSTRUCTURES AND DECKHOUSES AND THEIR CLOSING APPLIANCES

3.9.1 The Register technical supervision during manufacture of products is effected according to the requirements of Table 3.2.4. In surveys performance as per the list, the surveyor also carries out inspections according to the requirements of Table 3.9.1.

3.9.2 In survey during manufacture of product prototypes, additionally to the surveys specified in 3.9.1, the tests according to the program approved, which includes the verification of strength, rigidity and watertightness shall be carried out.

3.9.2.1 The tests of side scuttles, doors, companion hatches, skylights and ventilating trunks for strength and watertightness are carried out by a hydrostatic head according to Appendix 5.

3.9.2.2[1] The hatch covers of dry cargo holds are tested for strength and rigidity by the loads increased by 25 per cent as compared with the design ones.

1 Strength and rigidity test may not be carried out in cases when scantling have been determined according to the approval procedures.

Table 3.9.1

Nos.	Types of closing appliances	Suttles					Side doors	Outer doors in superstructures and deckhouses	Hatches			Doors in watertight subdivision bulkheads			Doors in bulkheads of vehicle carrying ships			Cargo hatch covers of:			
																		Dry cargo holds tightness is ensured by:		Holds for dry and bulk liquid cargoes using gaskets for tightness	Compart-ments of oil tankers
		heavy	normal	light	Rectangular (deckhouse windows)	deck scuttles			companion	skylights	ventilating trunks	hinged	sliding	rolling	hinged	sliding	rolling	tarpaulins	packing gaskets		
	To be verified:																				
1	Absence of defects on metal products surface[1]	+	+	+	+	+	+	+	+	+	+	+	+	+	+	+	+[2]	+	+[2]	+[2]	+
2	Absence of defects and damages on working surfaces of seals[3]	+	+	+	+	+	+	+	+	+	+	+			+		+		+	+	+
3	Presence of rounding off working edges of packing collars	+	+	+	+	+	+	+	+	+	+	+			+	+	+		+	+	+
4	Fit of packing gaskets to working edges of collars in the closed, but not secured position[4]	+	+	+	+	+	+	+	+	+	+	+			+	+	+		+	+	+
5	Alignment of working edges with the middle of packing gaskets[5]	+	+	+	+	+	+	+	+	+	+	+			+	+	+		+	+	+
6	Evenness of packing gaskets fit in the secured position												+	+[6]			+[6]				
7	Compactness of packing gaskets fitting in recesses	+	+	+	+	+	+	+	+	+	+	+			+	+	+		+	+	+
8	Flatness of frames, covers, plates according to instructions of the agreed procedure	+	+	+	+	+	+	+	+	+	+	+	+	+	+	+	+		+	+	+

Nos.	Types of closing appliances	Suttles					Side doors	Outer doors in superstructures and deckhouses	Hatches			Doors in watertight subdivision bulkheads			Doors in bulkheads of vehicle carrying ships			Cargo hatch covers of:			
																		Dry cargo holds tightness is ensured by:		Holds for dry and bulk liquid cargoes using gaskets for tightness	Compart-ments of oil tankers
		heavy	normal	light	Rectangular (deckhouse windows)	deck scuttles			companion	skylights	ventilating trunks	hinged	sliding	rolling	hinged	sliding	rolling	tarpaulins	packing gaskets		
9	Depth of packing gaskets indentation when secured[7]	+	+	+	+	+	+	+	+	+	+	+		+	+	+	+		+	+	+
10	Ease and smoothness of opening, closing and securing	+	+	+	+	+	+[8]	+	+	+	+	+	+	+	+	+			+	+	+
11	Tightness by a hose test	+[9]	+[9]	+[9]	+[9]	+[9]		+	+	+	+	+[10]	+[10]	+[10]		+[11]			+[8]	+[8]	+[12]
12	Weld tightness testing															+	+		+	+	
13	Structural measures preventing sparking																		+[13]	+	+

[1] Cracks, burrs, sharp edges, dents, cavities and other defects are unacceptable.
[2] Metal structures are checked according to Section 2.
[3] Cracks, cavities, stratifications, paint, and oil are unacceptable.
[4] Fit continuity is checked by a chalk test and shall be ensured at the indentation depth not over 1 mm excepting the closures, specified in columns 7, 19, 20, having an area of 15 m^2 and over.
[5] Displacement of packing collars relative to the gasket axis shall meet the technical documentation requirements.
[6] Gaps are checked by feelers or using other Register-agreed methods.
[7] The denting value shall not exceed the dimensions specified in technical documentation.
[8] Where side doors and cargo hatch covers are opened at sea, the Register supervision of a drive manufacture is effected according to Section 5.
[9] The hydrostatic head value for serial products shall be determined by the approved technical documentation.
[10] Testing on a stand with a head of water at the pressure specified in technical documentation; for doors fitted with non-metal seals, no down flows are followed; for doors fitted with metal seals, the standard of water filtering shall not exceed 1 l/min.
[11] Testing on a stand with a head of water at the pressure specified in technical documentation; the standard of water filtering in such test shall not exeed 10 l/min.
[12] Cockings and seizures are unacceptable; a hand wheel force in manual cover hoisting/lowering using additional tools and devices shall not exeed 157 N.
[13] Only for cargo hatches of dry cargo holds designed for the carriage of dangerous cargoes (refer to 7.10.8.6, Part III "Equipment, Arrangements and Outfit" of Rules for the Classification and Construction of Sea-Going Ships).

Watertightness is checked by a hose test without hatch cover loading according to Appendix 1 to Part II "Hull" of the Rules for the Classification and Construction of Sea-Going Ships.

3.9.2.3 The covers of oil tankers are tested for strength, rigidity and tightness by a hydrostatic pressure according to Appendix 1 to Part II "Hull" of the Rules for the Classification and Construction of Sea-Going Ships.

3.9.2.4 The hatch covers of holds intended for the carriage of both dry and bulk liquid cargoes are tested for strength by the load increased by 10 per cent as compared with the design one determined according to 7.13.4, Part III "Equipment, Arrangements and Outfit" of the Rules for the Classification and Construction of Sea-Going Ships.

Watertightness is checked by a hose test according to Appendix 1 to Part II "Hull" of the Rules for the Classification and Construction of Sea-Going Ships and by an air test at the air pressure equal to the maximum one for breathing valves actuation.

3.9.2.5 After testing, product parts shall be free from residual deformations and failures detected in surveying by visual examination with products disassembly when needed.

3.10 ARRANGEMENT AND EQUIPMENT OF SHIP'S SPACES, VARIOUS EQUIPMENT AND ARRANGEMENTS, EMERGENCY OUTFIT

3.10.1 The Register technical supervision is limited to the examination of the relevant technical documentation for manufacturing the following products:

.1 plating, sparring, cargo hold planking, doors of ship's spaces along escape routes, stairways and vertical ladders, guardrails, bulwark and catwalks, guides in containership's holds;

.2 knockdown temporary separating longitudinal and transverse bulkheads and feeders used for holds (tweendecks) separating and bounding in longitudinal and transverse directions during the carriage of grain cargoes dangerous due to their shifting; stanchions, spacers, stay ropes, non-detachable and detachable parts of stays;

.3 soft and hard mats with outfit, tools and inventory, emergency outfit materials;

.4 strengthenings of the bulwark or guardrails, sockets and other fixtures for securing uprights and stanchions for securing the deck timber cargo, eyes, lashings.

The types of checks, inspections and examinations in surveys are specified by the manufacturer in compliance with the technical documentation approved.

3.10.2 Essential parts of arrangements for securing movable decks, platforms, ramps and other similar structures, as well as for lifting gear of ship's lighters being hoisted aboard the barge carrier (lugs, eyebolts, eyes, shackles, clamps, etc.) shall be specified by the firm (manufacturer) relying on the technical documentation approved, and included in the list of items.

Besides, additional checks shall be taken in account if needed. According to the results of the Surveyor's supervision of product prototypes, the scope and details of serial products surveys and checks are specified.

3.11 STUDLESS CHAINS USED IN SHIP'S (OTHER THAN ANCHOR) ARRANGEMENTS

3.11.1 Studless chains used in the cargo handling gear, rudder and steering gear and other ship's (other than anchor) arrangements are subject to the Register technical supervision. They shall be manufactured according to the standards or other technical documentation approved by the Register.

3.11.2 The Register technical supervision of chains including all the related parts is effected according to Table 3.2.4. Additionally to the Table requirements and with due regard to the procedure of chains manufacturing and for their design, the checks prescribed by the requirements of 3.5.2.2 – 3.5.2.4 are carried out. If some requirements of these items are unlike those of the standards approved (or technical documentation), these latter shall be followed.

3.11.3 The test loads and instructions on sampling for tests are specified in 7.1.4, Part XIII "Materials" of the Rules for the Classification and Construction of Sea-Going Ships.

3.12 WIRE ROPES

3.12.1 The survey of wire ropes included in the list of items shall be carried out taking into account the technical requirements of the valid state standard for wire ropes.

3.12.2 Critical-purpose wire ropes for hoisting, lowering and moving people and cargoes are subject to a compulsory break test at large.

Such tests shall be carried out in surveying production prototypes and periodically once in two years, or in executing and periodical confirming Agreement on Supervision (once in two years) unless the demand for an extraordinary test arises during the supervision.

3.12.3 Wire ropes ignored in 3.12.2 and included in the list of items may be subjected to the break tests at large only in supervising the manufacture of their specimens.

3.12.4 The determination of the actual breaking strength of a wire rope shall be carried out on testing machines properly checked what is confirmed by the relevant documents of competent bodies.

3.12.5 The requirements of the Register agreed national standards may be used instead of those specified in 3.12.1 to 3.12.3.

3.13 NATURAL FIBRE AND SYNTHETIC FIBRE ROPES (CABLES)

3.13.1 In survey (according to the list of items), the following is verified in addition to the requirements of Table 3.2.4:

.1 competent body documents for testing machines;

.2 correctness of completing a set of batches and of sampling for tests performance;

.3 absence of ropes of brown spots, mould, the smell of rot or burning, and also of melted parts;

.4 colour of ropes, which shall be the same over their entire length, and correspond to the colour of the yarn or synthetic material the rope is made of;

.5 presence of distinctive colourful threads or yarns indicating the strength group and treatment if specified by a standard;

.6 circumference of rope;

.7 lay of ropes;

.8 actual breaking strength;

.9 documents on mass and moisture content;

.10 elongation in breaking a synthetic fibre rope.

3.13.2 Supervising the manufacture of rope production prototypes, excepting the surveys specified in 3.13.1, rope specimens are tested according to the program approved by the RS Branch Office. The experimental determination of the factor shall be included in the program (refer to Appendix 6).

APPENDIX 1

ACCEPTABLE VALUES OF FLAWS ON CAST PARTS OF ANCHORS

1. Gentle dents and roughness less than 3 per cent of a casting thickness in length, but not over 5 mm.

2. Single sand holes, blow-holes and slag blow-holes less than 5 mm in diameter and less than 5 per cent of a casting body thickness in depth, but not over 8 mm with their number not more than 3 pcs within an area of 100 cm^2.

3. Scabs below 200 mm in length and 2 mm in depth.

4. Displacements of surfaces without a fair transition from one surface to another for anchors having mass up to 500 kg – below 3 mm, for anchors having mass over 500 kg and up to 5000 kg – below 5 mm, and for anchors over 5000 kg – below 8 mm.

5. The total area of holes and blow-holes, dents, scabs, etc. shall not exceed 5 per cent of the area of a part surface.

APPENDIX 2

DROPPING TESTS OF ANCHORS AND THEIR PARTS

1. Each anchor fluke and shank shall withstand their drop onto a steel platform from a height of 4 m without failure. The plate shall be made of steel suitable for such tests of the anchor components and the corresponding thickness. Not applicable for welded and forged anchors.

The flukes of Hall's, Gruson's, super high and high holding power anchors are dropped onto the plate the crown downwards; the shanks of Hall's, Gruson's, super high and high holding power anchors, and also the shanks with the flukes of an admiralty anchor are dropped in a horizontal position.

2. Moreover, each cast or welded shank with flukes of an admiralty anchor shall be suspended in a vertical position, the flukes down wards, and dropped on two steel blocks put on the plate in such a manner that the distance between them is half the span of the flukes (refer to Figure). The blocks thickness shall be such as to prevent the anchor crown from striking against the plate.

3. After the drop test, the anchors or their parts shall be suspended and subjected to a hammer test with the hammer having mass of at least 3 kg; in so doing, they must give out a clear ringing sound.

If the sound is not clear, the part shall be tested for defects using non-destructive methods of testing. If needed, the defects shall be rectified and the test shall be repeated.

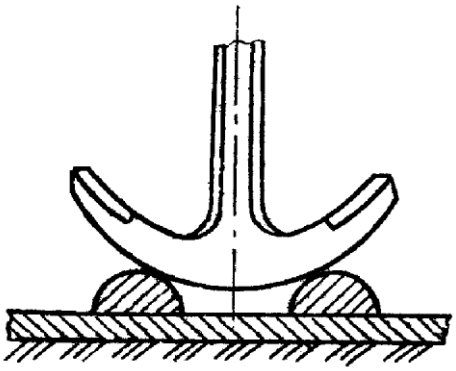

Fig. 1

APPENDIX 3

TENSILE TEST OF ANCHORS AND ANCHOR SHACKLES BY PROOF LOAD

1 Proof testing of anchors.

1.1 Testing of ordinary anchors.

1.1.1 Anchors of all sizes shall be proof tested with the test loads stipulated in the Table.

1.1.2 The proof load shall be applied on the arm or on the palm at a spot which, measured from the extremity of the bill, is one-third of the distance between it and the centre of the crown (refer to Figs1 and 2).

In the case of stockless anchors, both arms shall be tested at the same time, first on one side of the shank, then reversed and tested on the other.

1.1.3 Before application of proof test load the anchors shall be examined to be sure that castings are reasonably free of surface imperfections of harmful nature. After proof load testing the anchors shall be examined for cracks and other defects. On completion of the proof load tests the anchors made in more than one piece shall be examined for free rotation of their heads over the complete angle.

In every test the difference between the gauge lengths (as shown in figs.1 and 2) where one-tenth of the required load was applied first and where the load has been reduced to one-tenth of the required load from the full load may be permitted not to exceed 1 %.

1.2 Testing of HHP anchors.

The HHP anchor shall be proof tested with load required by the Table for an anchor mass equal to 1,33 times the actual mass of the HHP anchor. The proof loading procedure and examination procedure for HHP anchors shall comply with those for ordinary anchors (refer to 1.1).

1.3 Testing of SHHP anchors.

1.3.1 The SHHP anchor shall be proof tested with the load required by the Table for an anchor mass equal to twice the actual mass of the SHHP anchor. The proof loading procedure and examination procedure for SHHP anchors shall comply with those for ordinary anchors (refer to 1.1).

1.3.2 After the proof load test, all SHHP anchors shall be surface inspected by the dye penetrant method or by the magnetic particle method. All surfaces of cast steel anchors shall be surface inspected. All cast steel anchors shall be examined by UT in way of areas where feeder heads and risers have been removed and where weld repairs have been carried out. The surface inspections and UT inspections shall follow 2.5.3, Part III "Technical Supervision during Manufacture of Materials". Welded steel anchors shall be inspected at the welds. At sections of high load or at suspect areas, the Register may impose volumetric non- destructive examination, e.g., ultrasonic inspection or radiographic inspection.

1.3.3 The hammering test and the drop test may be additionally applied to cast steel anchors.

2 Anchor holding power tests for HHP and SHHP anchors.

2.1 Full scale tests shall be carried out at sea on various types of bottom, normally, soft mud or silt, sand or gravel and hard clay or similar compounded material. The tests shall be applied to anchors of mass which are as far as possible representative of the full range of sizes proposed.

2.2 For a definite group within the range, the two anchors selected for testing (ordinary stockless anchor and HHP anchor, or ordinary stockless anchor and SHHP anchor,

respectively) shall be of approximately the same mass and tested in association with the size of chain required for that anchor mass. Where an ordinary stockless anchor is not available, for testing of HHP anchors a previously approved HHP anchor may be used in its place. For testing of SHHP anchors, a previously approved HHP or SHHP anchor may be used in place of an ordinary stockless anchor. The length of the cable with each anchor shall be such that the pull on the shank remains horizontal. For this purpose, a scope of 10 is considered normal but a scope of not less than 6 may be accepted. Scope is defined as the ratio of length of cable to depth of water.

2.3 Three tests shall be taken for each anchor and each type of bottom. The stability of the anchor and ease of breaking out shall be noted where possible. Tests shall be carried out from a tug but alternatively shore based tests may be accepted. The pull shall be measured by dynamometer. Measurements of pull, based on the RPM/bollard pull curve of the tug may be accepted as an alternative to a dynamometer.

2.4 For approval and/or acceptance for a range of HHP anchor sizes, tests shall be carried out for at least two anchor sizes. The mass of the maximum size approved shall not be more than 10 times the mass of the largest size tested.

2.5 For approval and/or acceptance for a range of SHHP anchor sizes, at least three anchor sizes shall be tested, indicative of the bottom, middle and top of the mass range.

2.6 The holding power test load shall not exceed the proof load of the anchor.

3 Each cast anchor shackle shall be tested without an anchor with the non-standard pin secured in it applying a proof load F_2, in N:

$$F_2 = 2F_1$$

where F_1 = proof load for the anchor determined according to the Table and specified in the technical requirements of a drawing.

In some cases, this test may be carried out selectively in amounts of 5 % of a batch, but not less than two shackles.

The batch is taken as the shackles made of one steel brand after the joint heat treatment or heat treatment as per the same conditions with the compulsory fixing of temperatures. In proof load testing, no cracks and permanent set are acceptable.

If satisfactory results of the abovementioned tests by proof load for particular type of product have been received and the Recognition Certificate for Manufacturer has been issued, the following is admitted:

.1 to conduct tests of anchor shackles by proof load together with the anchor (refer to item 2);

.2 to conduct tensile tests of anchor shackles by proof load equal to double proof load for anchors only when endorsed by the Recognition Certificate for Manufacturer.

4 Each anchor, irrespective of the method of its manufacture, shall be made subject to the tensile test by applying a proof load on a special chain-testing machine or by a load suspended to the flukes. The anchors shall not be made subject to loading prior to testing.

5 After proof load testing NDT for all anchors shall be tested in accordance with 8.4.2.5 and 8.4.2.6 of Part XIII "Materials" of the Rules for the Classification and Construction of Sea-Going Ships as well as weighing, which is allowed to carry out selectively in the amount of 5 % from each batch but not less than two anchors.

Table

Anchor mass, kg	Proof load, kN	Anchor mass, kg	Proof load, kN	Anchor mass, kg	Proof load, kN	Anchor mass, kg	Proof load, kN
50	23,2	1250	239	5000	661	12500	1130
55	25,2	1300	247	5100	669	13000	1160

Anchor mass, kg	Proof load, kN	Anchor mass, kg	Proof load, kN	Anchor mass, kg	Proof load, kN	Anchor mass, kg	Proof load, kN
60	27,1	1350	255	5200	677	13500	1180
65	28,9	1400	262	5300	685	14000	1210
70	30,7	1450	270	5400	691	14500	1230
75	32,4	1500	278	5500	699	15000	1260
80	33,9	1600	292	5600	706	15500	1270
90	36,3	1700	307	5700	713	16000	1300
100	39,1	1800	321	5800	721	16500	1330
120	44,3	1900	335	5900	728	17000	1360
140	49,0	2000	349	6000	735	17500	1390
160	53,3	2100	362	6100	740	18000	1410
180	57,4	2200	376	6200	747	18500	1440
200	61,3	2300	388	6300	754	19000	1470
225	65,8	2400	401	6400	760	19500	1490
250	70,4	2500	414	6500	767	20000	1520
275	74,9	2600	427	6600	773	21000	1570
300	79,5	2700	438	6700	779	22000	1620
325	84,1	2800	450	6800	786	23000	1670
350	88,8	2900	462	6900	794	24000	1720
375	93,4	3000	474	7000	804	25000	1770
400	97,9	3100	484	7200	818	26000	1800
425	103	3200	495	7400	832	27000	1850
450	107	3300	506	7600	845	28000	1900
475	112	3400	517	7800	861	29000	1940
500	116	3500	528	8000	877	30000	1990
550	124	3600	537	8200	892	31000	2030
600	132	3700	547	8400	908	32000	2070
650	140	3800	557	8600	922	34000	2160
700	149	3900	567	8800	936	36000	2250
750	158	4000	577	9000	949	38000	2330
800	166	4100	586	9200	961	40000	2410
850	175	4200	595	9400	975	42000	2490
900	182	4300	604	9600	987	44000	2570
950	191	4400	613	9800	998	46000	2650
1000	199	4500	622	10000	1010	48000	2730
1050	208	4600	631	10500	1040		
1100	216	4700	638	11000	1070		
1150	224	4800	645	11500	1090		
1200	231	4900	653	12000	1110		

N o t e 1. Proof load for intermediate values of the anchor mass is determined by linear interpolation.

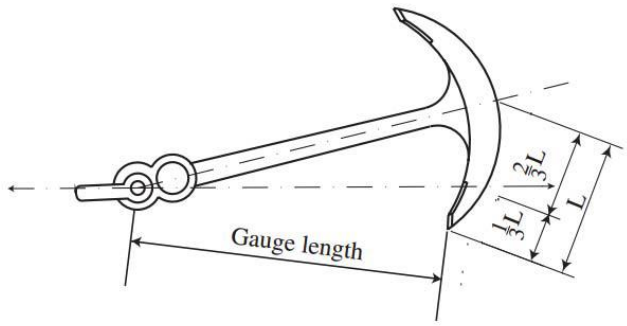

Stockless Anchor

Fig. 1

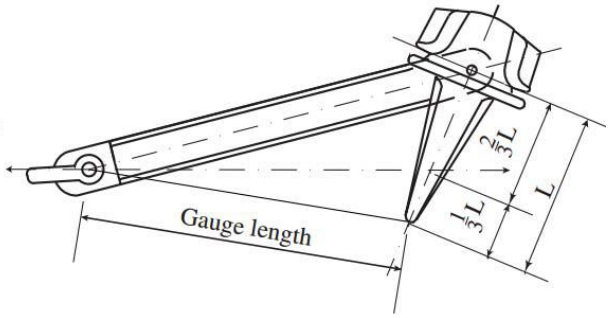

Stocked Anchor

Fig. 2

APPENDIX 4

TOW HOOK TESTS

1. The specimen of a tow line releasing device shall be tested for the reliability of actuation within the hook loading range from zero to a threefold rated pull at any feasible deviation of the tow line from the ship's centreplane.

With hook loads equal to the rated, twofold and threefold pull, the force on the release lever of the mechanical lock shall not exceed 117 N, 176 N and 392 N respectively.

The strength tests of hooks shall be carried out at the proof load equal to the actual breaking strength of the towline.

The above may be performed in testing pilot specimens, which shall be conducted according to the Register approved program. The hook and their parts tested are not fitted on ships.

2. Production prototypes of tow hooks shall be tested for:

.1 strength by a proof load equal to a twofold rated pull;

.2 reliability of the opening of the tow line releasing device under loading; testing is carried out at loads equal to a rated and twofold pull.

The forces on the release lever of the mechanical lock shall not exceed the values recorded in specimens testing.

The hook so tested may be fitted in a ship. If the forces on a lever exceed the values recorded in testing, but less than the limiting ones, the reliability of the tow line releasing device opening is checked at the load equal a threefold pull. In this case, the preproduction hook is not approved for fitting onboard ship;

.3 shock absorber actuation; the limiting load of absorbing effect shall be at least 1,3 the rated pull.

3. Each tow hook prior to its fitting onboard ship shall be tested for strength by the load equal to the twofold rated one, and for the reliability of the tow line releasing device opening under the load equal to the rated one. The force on the release lever of the mechanical lock shall not exceed the value recorded in testing the production prototype and specified in technical documentation.

4. Deformations and failures of any hook components in testing are unacceptable.

APPENDIX 5

TESTING PRODUCTION PROTOTYPES OF SIDE SCUTTLES, SUPERSTRUCTURE AND DECKHOUSE DOORS, COMPANION HATCHES, SKYLIGHTS AND VENTILATING TRUNKS

1. The above products shall be tested under a hydrostatic head to check watertightness and mechanical strength.

2. The tests are carried out as follows:

a product is installed on a test bed and secured in a working position; the test bed chamber is gradually pressurized up to a design and test level using a mechanical or manual pump, and a pressure gauge for control. Water supply regulation and test pressure fixing in the chamber are carried out with a stop valve.

3. Side scuttles are tested under a head determined by the formulae:

for round scuttles

$$P = 1{,}6 \cdot 10^2 t^2/d^2; \qquad (3\text{-}1)$$

for rectangular scuttles (deckhouse windows)

$$P = 1{,}25 \cdot 10^4 t^2/(k^2 b^2), \qquad (3\text{-}2)$$

where d = clear diameter of a round scuttle, in mm;
P = hydrostatic head, in MPa;
b = the least clear dimension of a rectangular scuttle, in mm;
t = thickness of the hardened glass of a scuttle, in mm;
a = the largest clear dimension of a rectangular scuttle, in mm;
k = factor according to the Table.

For intermediate values of *a/b,* the factor *k* is determined by linear interpolation.

Round scuttles are tested with the glass and with the deadlight opened, and also without the glass and with the deadlight closed.

4. The specimens of hardened glasses for scuttles shall be tested either by a punch method according to ISO 614 or by a hydrostatic head equal to the two fold head value.

a/b	1,0	1,1	1,2	1,3	1,4	1,5	1,6	1,7	1,8	1,9	2,0 and above
k	8,45	9,18	9,66	10,4	10,62	11,02	11,35	11,7	11,94	12,16	12,32

5. Outer doors of superstructures and deckhouses are tested under a head by 15 per cent larger than the design one assumed for a given door (refer to 7.5.2.3, Part III "Equipment, Arrangements and Outfit" of the Rules for the Classification and Construction of Sea-Going Ships) in the Register approved technical documentation.

6. Companion hatches, skylights and ventilating trunks are tested under a head by 15 per cent larger than the design (permissible) one specified in the Register approved technical documentation.

7. The product is considered tight if no leak like jets, runs and drops are detected within 5 min in testing under the design hydrostatic head.

8. The product is considered sound if no residual deformations and failures are detected after test head release.

APPENDIX 6

TESTING NATURAL FIBRE AND SYNTHETIC FIBRE ROPES

1. The specimens for the breaking test of a rope as a whole shall be withdrawn from the batch of ropes having a length of not more than 2000 m and 5000 m for natural fibre and synthetic fibre ropes respectively.

The rope end of at least 2 m long is removed from each batch and the test specimens are cut off. Prior to testing, the rope specimens are kept unrolled during 24 h under atmospheric conditions.

2. The rope circumference, if 500 mm and over, is measured with a tape measure having the steel tape no more than 5 mm wide, if under 500 mm, it is determined by measuring the cross-section with a caliper.

In order to determine the rope circumference, measurements are made in 10 different locations along the rope length. The arithmetic mean of 10 measurements is taken as the rope circumference.

3. Natural fibre ropes shall be twisted of yarns made of the same material. Exception is admitted for Manila ropes, which may include up to 50 per cent of sisal fibre yarns.

4. Determination of breaking load of a rope as a whole.

4.1 The distance between grips on a breaking machine for natural fibre ropes of up to 65 mm in circumference and synthetic fibre ropes shall be 0,5 m, for ropes of over 65 mm in circumference, 1 m.

The rate of breaking machine grips movement shall not exceed 250 mm/min for synthetic fibre ropes, and 300 mm/min for natural fibre ropes.

Marks shall be applied to the test specimen symmetric about the specimen centre and spaced at least 300 mm apart.

The result obtained in breaking the rope between the marks is assumed as the breaking load.

If the rope specimen fails in the grips of a breaking machine or in splices of an eye (if used), the test shall be repeated.

The breaking load of a rope as a whole shall correspond to the approved technical documentation requirements.

4.2 With the consistent positive test results of determining the breaking load of natural and synthetic fibre ropes as a whole, the Register can waive the test performance and allow determining that load *F,* in N, by the formula

$$F = c(\sum_1^z \Delta F)n/z, \qquad (4.2)$$

where n = total number of yarns in a rope;
z = number of yarns tested for breaking; that number shall be at least 0,5n for a rope circumference of up to 80 mm, 0,3n for a rope circumference from 80 mm to 115 mm and 0,1n, over 115 mm; yarns shall be taken from each strand in the same amounts;
ΔF = breaking load of each yarn tested, in N;
c = factor determined relying on the results of rope production prototype tests, and periodically confirmed.

In testing, an initial twist in yarns shall be retained. To determine the breaking load, the yarns from rope strands are taken up by untwisting the strand clamped at its ends until the yarns are parallel. The total breaking load of a rope across the yarns making up the rope

is determined by testing 50 per cent of yarns, taken up from all the strands, for the breaking machine grips shall be equal to 1,0 m.

The rate of breaking machine grips movement shall not exceed 300 mm/min. If the yarns being tested break in the grips or the result is below a mean value specified in technical documentation, the test is considered invalid.

4.3 In testing synthetic fibre ropes, elongation at break is determined at a time. The rope elongation at break δ_m, in per cent, is determined by the formula

$$\delta_m = \frac{l_{br} - l}{l} \cdot 100 \qquad (4.3)$$

where l = initial length of the rope specimen section being tested, in cm;
l_{br} = length of the above section loaded with the actual breaking strength of the rope specified in a standard, in cm.

4 FIRE PROTECTION MATERIALS, STRUCTURES AND PRODUCTS

4.1 GENERAL

4.1.1 The provisions of this Section apply in technical supervision during manufacture of fire protection materials, structures and products listed in the RS Nomenclature.

4.1.2 This Section defines the extent of and procedure for technical supervision during manufacture of fire protection materials, structures and products, and covers:

.1 materials, structures and products for structural fire protection;

.2 items of fire extinguishing systems and fire-fighting outfit, fire extinguishing media.

4.1.3 General provisions on the organization of technical supervision during manufacture of fire protection materials, structures and products are given in Part I "General Regulations for Technical Supervision", and on the technical documentation, in Part II "Technical Documentation".

4.1.4 Technical supervision during manufacture of fire protection materials, structures and products is carried out at the firm (manufacturer) given an application according to Section 4, Part I "General Regulations for Technical Supervision" or an agreement between the Register and firm (manufacturer).

4.1.5 Terms, definitions and abbreviations are given in Part I "General Regulations for Technical Supervision" of the Rules and in Part VI "Fire Protection" of the Rules for the Classification and Construction of Sea-Going Ships.

4.1.6 The Register issues Type Approval Certificates for fire protection materials and products, and Type Approval Certificates for Fire-Proof Division according to Section 6, Part I "General Regulations for Technical Supervision".

4.1.7 The IMO Guidelines on Alternative Design and Arrangements for Fire Safety (refer to 1.7, Part VI "Fire Protection" of the Rules for the Classification and Construction of Sea-Going Ships) may be used in technical supervision during manufacture of fire protection materials, structures and products.

4.2 FIRE PROTECTION MATERIALS, STRUCTURES AND PRODUCTS

4.2.1 Technical supervision during manufacture of structural fire protection materials and products is carried out to confirm their compliance with the applicable requirements of 1.6 and 2.1, Part VI "Fire Protection" of the Rules for the Classification and Construction of Sea-Going Ships and the Fire Test Procedures Code with sup-plements (refer to 1.2, Part VI "Fire Protection" of the Rules for the Classification and Construction of Sea-Going Ships).

4.2.2 In addition to fire tests, structural fire protection products (like doors, fire dampers of ventilation systems, automatic closing devices of fire doors) are checked for operability according to the Register-approved program.

4.2.3 In approval of materials, structures and products for structural fire protection, the Register, as a minimum, shall consider the following:

.1 technical documentation including the material description/structure or product drawings;

.2 instructions on use of the material/fabrication of the structure/installation of the product;

.3 test reports of fire tests carried out at the Register-recognized testing laboratories, or when the test laboratory is not recognized by the Register, test reports of fire tests witnessed by the surveyor to the Register. The contents of test reports shall be like that specified in the relevant test procedures. The test report usually belongs to the customer of test performance.

4.2.4 The RS approval becomes invalid after any essential material/structure/ product modification. Approval of material/structure/product after major conversion is performed according to the RS established procedure shall be retested.

4.2.5 Manufacturers of materials/structures/products for structural fire protection shall have a quality control system audited by competent bodies to ensure permanent conformity to type approval conditions. As an alternative, the Register may use procedures for the final verification of the material/structure/ product for conformity to the type approval prior to their installation onboard a ship.

4.2.6 In certain cases, the RS may approve the material/structure/product for one-time use only without issuing Type Approval Certificate/Type Approval Certificate for Fire-Proof Division. Such one-time approval is valid only for a particular ship.

4.2.7 Type Approval Certificate/Type Approval Certificate for Fire-Proof Division associated with materials, structures and products for structural fire protection shall include, as a minimum, the following:

.1 name or trade name of the material/structure/product;

.2 detailed description of the material/structure/product, in particular:

.2.1 for fire-proof divisions the following shall be clearly indicated:

type, thickness, density and number of layers of insulation material;

size, types, materials and fixing methods of pins and washers;

spacing between pins;

maximum spacing between pins and adjacent joints;

stepping of joints for multi-layers if applicable;

insulation and pinning details on and around stiffeners;

details of wire mesh, alu tape etc., if used in the test;

drawing number of the test sample;

.2.2 Type Approval Certificate for non-combustible materials shall indicate the organic content;

.2.3 Type Approval Certificate for surface materials shall state what substrate was applied for the test, as well as information on the colour, organic content and thickness of the material. The application and restriction shall be determined considering para 3, Appendix 4, Part 5, Annex 1 of the Fire Test Procedures Code, 2010, as well as calorific value determined

in accordance with ISO 1716 : 2010 "Reaction to fire tests for building products – Determination of the heat of combustion;

.2.4 Type Approval Certificate for windows shall state which side of the window was exposed to the heating condition during the test, and also a reference to optional tests such as hose test and/or thermo radiation test;

.3 classification of the material/structure/product and any restrictions on its use;

.4 test procedure(s) used in accordance with the Fire Test Procedures Code;

.5 test report number and date of its issue, name and address of the test laboratory.

4.3 ITEMS OF FIRE EXTINGUISHING SYSTEMS AND FIRE-FIGHTING OUTFIT, FIRE EXTINGUISHING MEDIA

4.3.1 Technical supervision during manufacture of items of fire extinguishing systems and fire-fighting outfit, fire extinguishing media is carried out to confirm their compliance with the requirements of Sections 3 and 5, Part VI "Fire Protection" of the Rules for the Classification and Construction of Sea-Going Ships.

4.3.2 Technical supervision during manufacture of items of fire extinguishing systems and fire-fighting outfit, fire extinguishing media is carried out in accordance with the Register-approved technical documentation developed by the firm (manufacturer) with use of applicable international and/or national standards in the fire safety area.

4.3.3 Technical supervision during manufacture of fire extinguishing system and fire-fighting outfit components like pumps, fittings, flexible connections, cylinders, electrical equipment, control systems, etc. is carried out in accordance with applicable Sections of this Part. To be verified are also items characteristics confirming their operability onboard a ship (resistance to sea water effect, explosion-proof enclosure, etc.).

4.3.4 Items/fire extinguishing media are tested according to the Register-approved program or IMO methods (refer to Table 4.3.6) to confirm their conformity to the characteristics specified in the approved technical documentation.

4.3.5 In approval of items/fire extinguishing media, the availability of documents issued by the organizations competent in the fire safety area or the results of tests witnessed by these organizations, which confirm a possibility to use the items/ fire extinguishing media for fire-fighting, may be taken into account.

4.3.6 Technical supervision during manufacture of items/fire extinguishing media for which the IMO has developed documents is carried out in accordance with these documents as per Table 4.3.6, as the case requires.

Table 4.3.6

Nos.	Item/fire extinguishing medium	IMO documents
1	Any	International Code for Fire Safety Systems (IMO resolution MSC.98(73))
2	Gas fire-extinguishing systems, but carbon dioxide systems	Revised Guidelines for the Approval of Equivalent Fixed Gas Fire-Extinguishing Systems, as referred to in SOLAS 74 for Machinery Spaces and Cargo Pump Rooms (MSC/Circ. 848)
3	Pressure water-spraying system	Recommendation on Fixed Fire-Extinguishing Systems for Special Cargo Spaces (resolution A.123(V)); the Revised Guidelines for the Approval of Fixed Water-Based Fire-Fighting Systems for Ro-Ro Spaces and Special Category Spaces (circular MSC.1/Circ.1430); the Revised Guidelines for the Approval of Equivalent Water-Based Fire-Extinguishing Systems for Machinery Spaces and Cargo Pump-Rooms (circular MSC/Circ.1165 as regards to amendments in IMO MSC.1/Circ.1269, MSC.1/Circ.1385 and MSC.1/Circ.1386); Guidelines for the Approval of Fixed Pressure Water-Spraying and Water-Based Fire-Extinguishing Systems for Cabin Balconies (circular MSC.1/Circ.1268); Guidelines for the Approval of Alternative Fixed Water-Based Fire-Fighting Systems for Special Category Spaces (circular MSC/Circ.914)
4	Sprinkler systems	Revised Guidelines for the Approval of Sprinkler Systems Equivalent as referred to in II-2/12, SOLAS 74 (IMO resolution A.800(19) taking into account the amendments to circulars MSC.265 (84) and MSC.284(86)
5	Fixed local application fire-fighting systems	Guidelines for the Approval of Fixed Water-Based Local Application Fire-Fighting Systems for Use in Category "A" Machinery Spaces (MSC.1 /Circ.1387)

Nos.	Item/fire extinguishing medium	IMO documents
6	Aerosol fire-extinguishing systems	Guidelines for the Approval of Fixed Aerosol Fire-Extinguishing Systems Equivalent to Fixed Gas Fire-Extinguishing Systems, as referred to in SOLAS 74, for Machinery Spaces (MSC/Circ. 1270)
7	Portable fire extinguishers	Improved Guidelines for Marine Portable Fire Extinguishers (IMO resolution A.951(23))
8	Foam concentrates	Revised Guidelines for the Performance and Testing Criteria and Surveys of Foam Concentrates for Fixed Fire-Extinguishing Systems (MSC.1/Circ.1312), Guidelines for Performance and Testing Criteria, and Surveys of Medium Expansion Foam Concentrates for Fixed Fire-Extinguishing Systems (MSC/Circ. 798), Guidelines for Performance and Testing Criteria, and Surveys of High Expansion Foam Concentrates for Fire-Extinguishing Systems (MSC/Circ. 670)
9	High-expansion foam fire extinguishing systems	Guidelines for the Testing and Approval of Fixed High-Expansion Foam Systems (MSC.1/ Circ.1384), para 3.4 of IMO resolution MSC.327(90) "Adoption of Amendments to the International Code for Fire safety Systems"

4.3.7 Tests with use of methods according to the IMO Guidelines are usually carried out by the Register-recognized testing laboratories.

4.3.8 The fire extinguishing systems are tested at the test pressure according to Table 3.12.1, Part VI "Fire Protection" of the Rules for the Classification and Construction of Sea-Going Ships.

4.3.9 The prototypes of monitors are tested for foam expansion a distance of projecting a jet of water, foam or powder at different elevations. The jet length shall be consistent with the technical documentation requirements. During tests, a pressure before the monitor and a flow rate of water, foam concentrate solution or powder are measured.

Foam expansion ratio and foam drainage time shall not differ by more than ±10 per cent from the values, calculated during the foam concentrate type approval compliant to 8 of Table 4.3.6. The Type Approval Certificate shall indicate foam concentrate, with which the tests have been conducted.

4.3.10 In the survey of sprinkler heads, their operating temperature is checked for about 3 % of the batch, but for at least three pieces. Type approval of spray nozzles of water spray and water mist fire-fighting systems shall be carried out based on the test results in compliance with IMO circular MSC/Circ.1165 as amended by MSC.1/Circ.1269 – for "open" spray nozzles and in compliance with Annex I to IMO resolution A.800(19) – for Automatic sprinkler systems.

4.3.11 In the survey of protective diaphragms of cylinder valves for high pressure carbon dioxide systems, in accordance with the requirements of 3.8.2.6.1, Part VI "Fire Protection" of the Rules for the Classification and Construction of Sea-Going Ships, 3 to 6 per cent of diaphragms per batch are subject to a breaking test.

4.3.12 Prototypes of high-expansion foam generators shall be tested in compliance with Appendices 2 and 3 to the Guidelines for the Testing and Approval of Fixed High-Expansion Foam Systems (MSC.1/Circ.1384).

4.3.13 In tests of prototypes of fire extinguishers, the duration of fire extinguishing substance discharge, jet length and fire extinguishing properties in fighting the model fire seat of an appropriate class are checked.

4.3.14 In tests of prototypes of portable foam generators, the flow rate of foam concentrate solution, pressure at the generator inlet, foam expansion ratio, distance and height of foam projecting, full coverage with foam of the generator net shall be checked.

Each generator shall be tested for strength at a hyd-raulic pressure of 0,9 to 1,0 MPa within at least 2 min.

Foam expansion ratio and foam drainage time shall not differ by more than ±10 per cent from the values, calculated during the foam concentrate type approval compliant to 8 of Table 4.3.6. The Type Approval Certificate shall indicate foam concentrate, with which the tests have been conducted.

4.3.15 In tests of prototypes of portable foam applicators, the foam discharge and foam expansion ratio at a pressure of about 0,3 MPa at the ejecting device, as well as the distance of foam projecting at the maximum pressure shall be checked.

4.3.16 When approving individual elements of fireman's outfit (protective clothing, boots, helmet, breathing apparatus) it is recommended to take into account the requirement that their design and component parts shall, when wearing a full set of fireman's outfit, protect the entire surface of the fireman's skin from the heat radiating from the fire and from burns and scalding by steam.

5 MACHINERY

5.1 GENERAL

5.1.1 The provisions of this Section apply in technical supervision during development and manufacture of machinery listed in the RS Nomenclature.

5.1.2 The Section establishes the procedure of technical supervision during manufacture of the above mentioned items of technical supervision at the firm (manufacturer).

5.1.3 General provisions for the organization of technical supervision during manufacture of the cited items are set out in Part I "General Regulations for Technical Supervision", and those concerning technical documentation – in Part II "Technical Documentation".

5.1.4 The following definitions and abbreviations are used for the purposes of this Section.

External examination means examination of a component, material, equipment; verification of accompanying documents issued in accordance with the accepted form of supervision during manufacture, and other documentation defining the compliance of the items of supervision with the approved technical documentation, e.g. measurement results, presence of brands (if envisaged), flaw detection results, etc.

Based on the results of external examination, the possibility of continuing manufacturing (machining), installation, hydraulic testing, etc. process shall be explored.

ICE – internal combustion engine.

MGTI – main geared turbine installation.

GTI – gas turbine installation.

GT – gas turbine.

QCV – quick closing valve.

RAC – remote automatic control.

RC – remote control.

HPC – high-pressure compressor.

LPC – low-pressure compressor.

HPT – high-pressure turbine.

LPT – low-pressure turbine.

AT – astern turbine.

FSAH – full speed ahead.

FSAS – full speed astern.

MTB – main thrust bearing.

MODU – mobile offshore drilling unit.

For gas engines, the definitions given in 9.2 of Part IX "Machinery" of the Rules for the Classification and Construction of Sea-Going Ships are used.

5.1.5 All the materials including forgings and castings, component parts and articles intended for manufacturing machinery and components thereof as well as completing units shall have documents showing compliance of the material and manufacturing technique with the approved technical documentation. These documents shall be drawn up in accordance with the RS Nomenclature.

5.1.6 The date of an application for ICE survey is the date of any document, which the Register accepts as the application, or the date of an application for survey of a specific engine.

5.1.7 The results of component measurement and fixing measurements submitted in the process of manufacturing the components and during installation thereof, shall encompass

all measuring points specified by the working documentation and instructions on installation and operation of the machinery.

The control of the measurement results shall be exercised at random with the aim to determine the compliance of the design of the supervised item, its dimensions and inspection methods with the requirements of the working drawings.

The requirements of this Section shall be taken into account during external examination of completely finished components.

5.1.8 As regards the materials (blanks) incoming for finishing as well as the related equipment and/or components, prior to installation, the documents stated in 5.1.5 shall be presented.

5.1.9 Where it is necessary to correct defects on treated and untreated surfaces of castings, forgings and welded struct-ures, the requirements of Parts XIII "Materials" and Part XIV "Welding" of the Rules for the Classification and Construction of Sea-Going Ships shall be taken as a guidance.

5.1.10 When conducting hydraulic tests, the test pressure shall be taken in accordance with 1.3, Part IX "Machinery" of the Rules for the Classification and Construction of Sea-Going Ships, and the testing conditions shall meet the standards in force and the following requirements:

.1 the ambient air temperature shall be not lower than +5 °C;

.2 the difference between the ambient air temperature and the temperature of medium used for the hydraulic test shall not exceed 10 °C; to avoid sweating, a medium with a temperature in excess of the ambient air temperature shall be used;

.3 any work on parts subjected to hydraulic test shall be forbidden.

5.1.11 Scope and procedure of the surveys and tests of the supervised items during the manufacture and installation at the firm (manufacturer) are indicated in the List (refer to 12.2, Part I "General Regulations for Technical Supervision") elaborated by the firm (manufacturer) and approved by the RS Branch Office on the basis of the RS Nomenclature as well as the requirements of this Section. When compiling the List, account shall be taken of the salient features of the production process adopted at the firm's (manufacturer's).

5.1.12 Forms of the manufacturer's documents including measuring results tables, test tables, presentation certificates shall be elaborated with regard to the requirements of the List agreed with the Surveyor.

5.1.13 Test performance and scope, where no special requirements of the rules are available, shall be defined by the standards in force approved by the Register.

5.1.14 The Surveyor, if need be, may perform periodic checks and surveys not stated in the List but stipulated by the Contract on Supervision or Agreement on Survey, for example:

.1 check of the control operation effectiveness;

.2 check of the adherence to the production process;

.3 check of the assemblies, parts not included in the List, but whose quality of manufacture affects the proper operation of the machinery as a whole, and the check thereof at the final stage of manufacture shall be dispensed with.

In all cases, when an impermissible defect or trouble is detected at any stage of the supervised item presentation, the Surveyor, should the need arise, may require a second check of any preceding operation within the scope necessary to discover the causes and prevent re-occurrence of defects.

5.1.15 Methods of check, tools and arrangements for its performance during manufacture and installation shall be established by the firm (manufacturer) to the satisfaction of the Register and indicated in the documentation on the production process.

5.1.16 The manufacturing and installation tolerance standards not represented in the approved manufacturing documentation shall be indicated in the production process documentation approved by the Register.

5.2 MAIN AND AUXILIARY INTERNAL COMBUSTION ENGINES OF POWER OUTPUT 55 k WAND OVER

5.2.1 Technical supervision during manufacture of the internal combustion engines, their assemblies and parts shall be performed in accordance with the provisions of Appendix 8, list of items and the RS Nomenclature.

5.2.2 Bed plates of internal combustion engines.

5.2.2.1 The bed plates of internal combustion engines welded and combined cast-and-welded construction, upon completion of preliminary treatment and all welding operations (including correction of defects by welding) shall be subjected to heat treatment in accordance with the approved procedure.

Minor defects the correction of which does not give rise to deformation of the bed plate (frame), on agreement with the surveyor, may be rectified without subsequent heat treatment.

5.2.2.2 During external examination of the finished bed plate of internal combustion engine it is necessary to be guided by the provisions of 5.1.7 and the documents of the technical supervision body. A random check makes it possible to make sure that the bed plate meets the requirements of the technical documentation with respect to:

.1 its construction and dimensions;

.2 performance of welded joints;

.3 performance of joints and joining of the bed plate parts together;

.4 execution of the treated surfaces so that they can be conjugated with the following parts:

wedges;

frames;

crankcase columns;

main bearing liners;

other parts;

.5 performance of the required checks:

inspection of steel cast, forged parts and welds for likely flaws;

alignment of recesses for the main bearings;

position of bearing surfaces;

position of mated surfaces;

parallelism, perpendicularity and concentricity of surfaces;

presence of defects and their nature;

surface roughness.

5.2.3 Crankcases.

5.2.3.1 When surveying a crankcase or its individual parts, the applicable requirements of 5.2.2 shall be taken as guidance.

5.2.3.2 A warning notice shall be fitted either on the control stand or, preferably, on a crankcase door on each side of the engine. This warning notice shall specify that, whenever overheating is suspected within the crankcase, the crankcase doors or sight holes shall not be opened before a reasonable time, sufficient to permit adequate cooling after stopping the engine.

5.2.3.3 Crankcase explosion relief valves:

.1 crankcase explosion relief valves shall have Type Approval/Test Certificate to confirm their compliance with the requirements in 2.3.5, Part IX "Machinery" of the Rules for the Classification and Construction of Sea-Going Ships. Type testing procedure for the crankcase explosion relief valves is described in Appendix 10;

.2 crankcase explosion relief valves shall be installed in compliance with the manufacturer's installation and maintenance manual that is pertinent to the size and type of the valve supplied for installation on a particular engine. The manual shall be included into the installation set of the crankcase explosion relief valves and contain the following information:

description of valve with details of function and design limits;
a copy of Type Approval/Test Certificate;
installation instructions;
maintenance in-service instructions to include testing and renewal of any sealing arrangements;
actions required after a crankcase explosion.

N o t e . A copy of the installation and maintenance manual shall be delivered to the ship together with the engine and kept on board.

.3 the crankcase explosion relief valves shall be provided with suitable markings that include the following information:
name and address of manufacturer;
designation and size;
date of manufacture;
approved installation orientation.

5.2.3.4 Oil mist detection and alarm arrangements:

.1 oil mist detection arrangements shall be of a type approved by the Register and comply with the applicable requirements in 2.3.3, Part IX "Machinery" of the Rules for the Classification and Construction of Sea-Going Ships. The type testing procedure for crankcase oil mist detection and alarm arrangements is described in Appendix 11;

.2 the oil mist detection and alarm arrangements shall be installed in accordance with the engine designer's and oil mist manufacturer’s instructions/recommendations. The following particulars shall be included in the instructions:
schematic layout of engine oil mist detection and alarm arrangements showing location of engine crankcase sample points and piping or cable arrangements together with pipe dimensions to detector;
evidence of study to justify the selected location of sample points and sample extraction rate (if applicable) in consideration of the crankcase arrangements and geometry and the predicted crankcase atmosphere where oil mist can accumulate;
the manufacturer's maintenance and test manual;
information relating to type or in-service testing of the engine with engine protection system test arrangements having approved types of oil mist detection equipment.

N o t e . A copy of the oil mist detection arrangements maintenance and test manual shall be provided on board ship;

.3 oil mist detection arrangements shall be capable of being tested on the test bed and board under engine at standstill and engine running at normal operating conditions in accordance with test procedures that are acceptable to the Register. The equipment together with detectors shall be tested when installed on the test bed and on board ship to demonstrate that the detection and alarm system functionally operates.
The testing arrangements shall be agreed with the Register.

5.2.4 Frames and columns.

When surveying frames and columns or their individual parts, the applicable requirements of 5.2.2 shall be taken as guidance.

5.2.5 Cylinder blocks.

5.2.5.1 When surveying cylinder blocks or individual parts thereof, the applicable requirements of 5.2.2 shall be taken as guidance.

5.2.5.2 The cylinder block or its sections, upon finishing, shall be tested on the cooling space side by a hydraulic test pressure in accordance with the requirements of 5.1.10, with particular attention being given to the tightness of temporary seals.

5.2.6 Cylinder liners.

5.2.6.1 When surveying cylinder liners, the applicable requirements of 5.2.2 shall be taken as guidance.

5.2.6.2 After finishing, the cylinder liner shall be subjected to test by a test hydraulic pressure in accordance with the requirements of 5.1.10.

5.2.6.3 In case of liners with cooling nave collars, particular attention shall be given to the tightness of temporary seals of bores or sockets forming cooling space of the nave collar.

5.2.7 Cylinder covers.

5.2.7.1 When surveying cylinder covers or individual parts thereof, the applicable requirements of 5.2.2 shall be taken as guidance.

Particular emphasis shall be also placed on the tightness of temporary seals of bores and welds of the welded-on shells forming cooling space of the cylinder cover as well as the inserts for mounting valves.

5.2.7.2 After finishing, the cylinder cover (in assembly, in case of built-up cover) shall be subjected to test on the cooling space side by a test hydraulic pressure in accordance with the requirements of 5.1.10.

5.2.8 Tie rods.

In addition to the compliance of their dimensions, particular attention shall be given to thread condition. During external examination of the tie rods, the results of flaw detection shall be verified as well.

5.2.9 Pistons.

During external examination of the finished pistons, the following shall be checked:

parallelism of the ring groove surfaces between each other;

perpendicular position of the ring groove to the piston axis;

perpendicular position of the axis of bore for the gudgeon pin to the piston axis and location of these axes in the same plane;

concentricity of the surfaces the centre of which is situated on the piston axis;

results of flaw detection.

5.2.10 Piston rods.

During external examination of a finished piston rod, the following shall be checked:

parallelism or alignment of the mated surfaces each other;

perpendicular position or alignment of the mated surfaces with the rod axis;

results of flaw detection.

5.2.11 Connecting rods.

During external examination of a finished connecting rod, the following shall be checked:

parallelism of the mated surfaces each other;

perpendicular position of the mated surfaces to the connecting rod axis;

results of flaw detection.

5.2.12 Crossheads.

During external examination of a finished crosshead, the following shall be checked:

alignment of journals;

parallelism and misalignment of the surface generatrices of one journal in relation to another;

results of flaw detection and heat treatment.

5.2.13 Crankshafts.

5.2.13.1 During external examination of a finished crankshaft, the following shall be checked:

parallelism of the generatrices of journals and crank pins to the crankshaft axis;

lack of cylindrical shape of the journals and crank pins;

crank throw setting angles, crank throw radii;
perpendicular position of the generatrices of journals and crank pins to the surfaces of webs;
run-out of journals and crank pins, flanges and seats for gear or sprocket to drive the camshaft;
observance of the radii and roughness rates of journal, crank pin and flange fillets as well as oil channels;
results of the flaw detection and heat treatment;
roughness of surfaces of the journals and crank pins.

5.2.13.2 In case of built and semi-built crankshafts, in addition to checks mentioned above, the following shall also be checked:
roughness of the treated surfaces for press-fit;
lack of cylindrical shape of the mounting surfaces;
perpendicular position of the axes of holes for press-fit of journals and crank pins to the side surfaces of webs;
alignment of the oil channels in journals and crank pins and the webs;
value of the accepted interference fit of the journals and crank pins in the webs.

5.2.14 Main, connecting rod, crosshead and built-in thrust bearings.

During external examination of the finished bearing shells for lining or the bearings completely manufactured of antifriction material or after lining, the following shall be checked:
concentricity of sections;
perpendicular position of the end faces to the bore axis;
concentricity of lining;
contact between the bearings and their seats;
interference fit (bushes-bearings);
results of inspection of the lining for flaw;
tight fit and interference value (thin-walled bearings).

5.2.15 Bolts and studs of connecting rods, main bearings, cylinder covers, attachment of counter-weights to crankshaft webs and connections of crankshaft sections, attachment of torsional vibration dampers.

During external examination of the finished bolts and studs, the following shall be checked:
concentricity of sections;
perpendicular position of the generatrices to the end faces;
bolt length recorded on the bolt body;
results of flaw detection.

5.2.16 Speed governors and overspeed devices.

The finally assembled speed governors and overspeed devices shall be tested on bench or in conjunction with the machinery to be tested on bench.

5.2.17 Upon completion of survey of the ICE assemblies and components, technical supervision during installation of the engine on bench shall be performed.

Assembly of the engine begins with installation of the bed plate on the bench beams. In the process of installation, the following shall be controlled:

.1 installation of the bed plate in horizontal position with fasteners being not tightened down snugly and with wedges adjusted;

.2 matching, fixing and attachment of individual parts of the frame one to another; in case of bed plated of the ICE with long detachable welded oil pans, attention shall be given to the attachment of the oil pan and its parts;

.3 tightening of bolts and stops with subsequent check for the horizontal position of the top frame plane;

.4 removal of the datum lines;

.5 check for the alignment of the main bearing seats;

.6 matching of the main bearing shells to seats and fitting of the radial-and-axial bearing;

.7 check of the oil pan for tightness;

.8 placement of the crankshaft with check of the journals for fit to the bearings, check of the shaft for horizontal position and proper orientation as well as for the run-out of journals, measurement of crank web clearances;

.9 establishment of clearances of the main, radial-and-axial and thrust bearings;

.10 installation of the crankcase columns, frames and their parts, alignment of the guides;

.11 installation and alignment of the cylinder block or individual blocks, check of the surfaces of the individual cylinder block parts for fit to one another, their fixing and securing;

.12 tightening of tie rods and bearings with specified tightening (to be carried out according to the firm's (manufacturer's) instruction);

.13 control check of the crank web clearances after the tie rods have been tightened and the turning gear (flywheel) mounted;

.14 installation and alignment of the valve timing gear and camshaft;

.15 mounting of the cylinder liners;

.16 mounting of the running gear components;

.17 alignment of the running gear with establishment of mounting bearing clearances;

.18 mounting of the cylinder covers with fittings and gear having undergone tests and adjustment;

.19 mounting of the engine serving systems;

.20 mounting and alignment of the power driven and/or gas turbine air chargers;

.21 check of component locking.

5.2.18 When carrying out bench tests, it is necessary to be guided by the requirements of 5.12 and Appendix 7 taking account the following (as applicable and in compliance with the requirements of 5.12 and Appendix 7):

.1 before the ICE is put to an operating mode, the control, regulation, alarm and protection systems shall be checked, namely:

interlocking of the starting control system with the turning gear;

number of starts with determination of the air consumption at various pressures;

operation of the governors;

operation of the overspeed device;

operation of the alarm and protection systems;

operation of the RAC and RC according to test program, reversal on various modes with measuring of time, operation at the minimum stable rotational speed, operation of the emergency shut-down device;

.2 operation of the ICE is checked on modes stipulated by the program, including reversal and meanwhile the following parameters shall be recorded:

temperature and pressure at the inlet and outlet (for the lubrication system);

water temperature and pressure in the external and closed circuits at the inlet and outlet, including air coolers (for the cooling system);

parameters associated with the working process: ambient air pressure, temperature and humidity, supercharging air pressure, compression pressure, combustion pressure, mean effective pressure, gas temperature by cylinders, gas temperature at the turbocharger inlet and outlet, exhaust backpressure;

other: engine power output, speed, turbocharger speed;

.3 upon completion of the bench tests, random inspection of the ICE components shall be performed within the scope stipulated by the bench test program;

.4 the ICE shall be assembled with random verification of the results of the component measurement, except for the ICE supplied in knock-down form, if the inspection results do not call for a test check;

.5 check tests shall be performed with verification of necessary parameters.

5.3 AUXILIARY INTERNAL COMBUSTION ENGINES OF POWER OUTPUT BELOW 55 kW

5.3.1 Technical supervision during the manufacture of the auxiliary ICE, their assemblies and components shall be performed in compliance with the applicable requirements of 5.2 and the requirements of 5.12.

5.4 MAIN STEAM TURBINES AND ELECTRIC GENERATOR TURBINES

5.4.1 Technical supervision during the manufacture of main steam turbines, electric generator turbines, their assemblies and components shall be performed within the scope given in Table 5.4.1 and in compliance with the requirements of this Chapter.

Table 5.4.1

Item of technical supervision	Examination of materials, blanks, assemblies, components	Verification of accompanying documents, brands	Flaw detection	Hydraulic tests	Special tests	Bench tests
Main steam turbines and electric generator turbines						+
Turbine casings	+	+	+	+		
Nozzle boxes and manoe-uvring gear casings	+	+		+		
Nozzles	+	+				
Diaphragms	+	+			+	
Disks	+	+	+		+	
Blades	+	+	+		+	
Gland seals	+	+				
Rotors and shafts	+	+	+		+	
Bearings	+	+	+		+	
Couplings	+	+			+	
Shrouds and lashing wire	+	+				
Bolts for joining split casings	+	+	+			

5.4.2 Turbine casings.

5.4.2.1 Turbine casings of cast, welded and combined cast-and-welded construction, after preliminary treatment (including all welding operations), shall be made subject to heat treatment according to the approved procedure.

5.4.2.2 During external examination of a finished turbine casing, it is necessary to make sure that:

welded joints, treated surfaces for wedges, for joining individual parts of casing, for bearing shells, gland seals, diaphragms, nozzles and guide apparatus comply with the requirements of the technical documentation;

inspection of welds and basic material for flaw, check of bored seats for gland seals, bearings, nozzles and guide apparatus for alignment have been carried out using approved methods;

welds have required leg and have no defects;

surfaces of individual casing parts joint have been matched to one another and their relative position has been fixed;

holes for bolted joints are aligned and their generatrices are perpendicular to the surfaces for nuts (heads);

surfaces for bearings, gland seals and guide apparatus are concentric and have no conicity and ellipticity and their axis is situated in the horizontal split plane and is perpendicular to end faces of bores.

5.4.2.3 The finished turbine casing shall be made subject to hydraulic test in accordance with 5.1.10.

5.4.3 Nozzle boxes and manoeuvring gear casings.

5.4.3.1 During external examination of the finished nozzle boxes and manoeuvring gear casings, the requirements of 5.4.2 shall be taken as guidance, particular attention being given to pressing-in of the valve seats and treatment of the attachments.

5.4.3.2 The finished box nozzles and manoeuvring gear casings shall be made subject to hydraulic test in accordance with the requirements of 5.1.10.

5.4.4 Nozzles.

During external examination of the finished nozzles, it is necessary to make sure that the profiles comply with the requirements of the technical documentation and the surface are free of undercuts, cracks and other defects.

5.4.5 Diaphragms.

5.4.5.1 All the appropriate requirements of 5.4.2 for the inspection of cast and combined cast-and- welded also cover the diaphragms.

5.4.5.2 The diaphragms (cast iron and steel) with blades cast therein, after thorough cleaning shall be presented to the Surveyor to check the blade casting quality.

Where there are poorly cast blades or blades with clear indication of burning, the diaphragms shall be rejected.

5.4.5.3 The channel walls shall be plane; particular attention shall be given to places where the blades emerge from the diaphragm metal.

5.4.5.4 The Surveyor shall verify that the diaphragm channel measurement data sheet has been correctly filled in.

5.4.5.5 In the presence of the Surveyor, the diaphragms shall tested for deflection; and after unloading the diaphragms shall be free of residual stresses.

5.4.6 Disks.

5.4.6.1 The finished disks shall be presented to the Surveyor to assess the quality of the treated surfaces which shall be free of cracks, cavities and other defects.

The ends of bosses (hubs), crowns, the relieving openings, boss openings, fillet positions shall be thoroughly polished.

Disks shall be measured and the results entered in the data sheets.

5.4.6.2 Each disk shall be inspected for flaw by a method approved by the Register and subjected to static balancing before being fitted on shaft.

If bladed disks are fitted on shaft, the first balancing (without blading) need not be presented to the Surveyor.

5.4.7 Blades.

5.4.7.1 When examining the finished blades, it is necessary to make sure that:

profiles and root parts for fitting comply with the technical documentation;

blade edges are rounded off and have no scratches or scores;

polished blades have no machining traces.

Particular attention shall be given to the blade root thread which shall be made clean, without scores and provide for proper fitting of the blades without float and excessive interference.

5.4.7.2 Each blade shall be inspected for flaw by a method approved by the Register; blades having cracks, cavities and similar defects shall not be admitted for use.

5.4.7.3 In case of the finished blades which are put together in packs, the natural frequency shall be checked.

5.4.8 Gland seals.

When examining gland seals, it is necessary to make sure that their working elements are concentric, the bore axis is perpendicular to end faces, springs have necessary rigidity.

5.4.9 Rotors and shafts.

5.4.9.1 During external examination of the finished rotors or shafts, it is necessary to make sure that:

flaw detection has been performed by an approved method;

sections of journals and their surfaces, radii of all fillets, thrust collar as well as treated surfaces for fitting disks, blades, gland seal cages and coupling parts comply with the technical documentation;

all treated surfaces have been measured and the results entered in data sheet;

roughness of treated surfaces has been measured and the results entered in data sheet;

bolted joints of built-up drums have been securely locked.

5.4.9.2 Particular attention shall be given to proper position and treatment of entry slots for locking blades and check of key fitting.

5.4.9.3 The bladed rotor shall be presented to the surveyor for external examination during which it is necessary to make sure that:

fitting of disks, gland seal cages, thrust collar and other fitted-on parts has been made with interference stipulated by the technical documentation;

blades have been fitted without float and excessive interference;

shrouding tape, after clinching tenons, has no tears and been securely fastened;

lashing wire has been fastened by the stipulated method with the use of a proper alloy.

5.4.9.4 The completely assembled rotor with all components fitted thereon shall be subjected to indicating and dynamic balancing, the results of which shall be entered in the rotor data sheet and presented to the Surveyor.

5.4.10 Bearings.

During external examination of the finished bearings, it is necessary to make sure that:

bearing surfaces of shells machined for seats and journals comply with the requirements of the working drawings;

flaw detection and special tests (bonding, metallography) have been performed by approved methods.

5.4.11 Couplings.

5.4.11.1 During external examination of the finished couplings, it is necessary to make sure that the surfaces machined for fitting on shafts (rotor), key slots, gear rings, holes for pressing in bushings, bushings and pins, heat treatment of teeth comply with the technical documentation.

5.4.11.2 Dynamic balancing and, if need be, finishing of the couplings shall be carried out together with the rotor (shaft).

5.4.12 Shrouds and lashing wire.

In addition to the requirements of 5.4.9.3, inspection of the shrouds and lashing wire shall be carried out also in respect of the materials used and compliance of their technical documentation.

5.4.13 Bolts and studs for joining the split casings shall be checked in accordance with the requirements of 5.2.15.

5.4.14 On completing the survey of assemblies and components of steam turbines during the manufacture thereof, the technical supervision during the turbine mounting shall be performed and whilst so doing, it is necessary to make sure that:

turbine assemblies and components which came for the mounting have no transport damages;

rotor has been placed in accordance with the requirements of the technical documentation for mounting;

also, the check shall cover:

fitting of bearings to seats;

fitting of bearings to rotor journals;

fitting of the thrust bearing pads;

establishment of bearing clearances;

establishment of sliding support clearances;

attachment of resilient supports;

mounting of diaphragms, gland seals;
axial and radial clearances of blading and gland seals;
fixing and joining of split casings;
fit of bolt heads and nuts to the turbine casing flanges;
alignment of turbine rotor with the torsion shaft or with the shaft of the first reduction gear stage pinion with the required contacts on the contact surfaces of half-couplings ensured;
presented results of the fixing measurements made by the technical inspection body using an approved method.

5.4.15 When carrying out bench tests of the steam turbines, it is necessary to be guided by the requirements of 5.12 and the requirements specified below.

5.4.15.1 Before the turbine is put to an operating mode, it is necessary to check operation of the regulation, control, alarm and protection systems. The check shall cover:
thrust and main bearing clearances with the use of organic means;
interlocking of turning gear with controls (quick-closing valve – QCV);
axial displacement of rotor which results in QCV closing;
opening and closing of the quick-closing valve, including use of a manual drive, and closing of the QCV by the emergency shut-down device;
closing of the QCV when the turbine speed exceeds the maximum allowable one, actuated by the speed meter or overspeed trip;
closing of the QCV when the pressure in the condenser rises;
operation of the bleeder valves.

5.4.15.2 When the turbine is checked on modes stipulated by the program, including emergency modes and reversal, the following parameters shall be recorded:
steam pressure before the nozzles of each casing;
pressure in the condenser;
bleed steam pressure;
steam temperature before the nozzles;
condensate temperature;
steam pressure at all ejector stages;
oil pressure in the lubrication system;
oil pressure in the regulation and protection system;
oil temperature in the lubrication system;
reduction gear output shaft speed;
time of reversal from FSAH to FSAS and back;
time of the turbine run-out.

5.4.15.3 Bench tests and inspection of the reduction gear, couplings, thrust bearing and attached machinery shall be performed in accordance with the requirements of the relevant chapters of this Section.

5.4.15.4 Upon completion of the bench tests, the turbines shall be inspected with random verification of the measurement results of components, and the following items shall be generally examined:
rotor and its components;
main and thrust bearings;
gland seals;
casing and its components.

5.4.15.5 After inspection and rectification of defects, the turbine shall be assembled and check tests performed with the verification of necessary parameters.

5.5 AUXILIARY STEAM TURBINES

5.5.1 Technical supervision during the manufacture of auxiliary steam turbines, their assemblies and components shall be performed within the scope given in Table 5.5.1 and in accordance with the applicable requirements of 5.4 and the requirements of 5.12.

Table 5.5.1

Item of technical supervision	Examination of materials, blanks, assemblies, components	Verification of accompanying documents	Flaw detection	Hydraulic tests	Special tests	Bench tests
Auxiliary steam turbines						+
Turbine casings	+	+	+	+		
Nozzle boxes	+	+		+		
Nozzles	+	+				
Disks	+	+	+			
Blades	+	+	+		+	
Rotors and shafts	+	+	+		+	
Bearings	+	+	+		+	

5.6 MAIN GAS TURBINES AND ELECTRIC GENERATOR GAS TURBINES

5.6.1 Technical supervision during the manufacture of main gas turbines, electric generator gas turbines, their assemblies and components shall be performed in accordance with the requirements of this Chapter within the scope given in Table 5.6.1.

Table 5.6.1

Item of technical supervision	Examination of materials, blanks, assemblies, components	Verification of accompa-nying documents	Flaw detection	Hydraulic tests	Special tests	Bench tests
Gas turbine frame and its supports	+	+	+			
Air suction inlets	+	+		+		
Turbine casings and compressor housings	+	+	+	+		
Nozzle cascades	+	+	+		+	
Diaphragms	+	+			+	
Compressor disks and journals and turbine disks	+	+				
Turbine and compressor blades	+	+	+		+	
Turbine and compressor rotors and shafts	+	+	+		+	
Shafts (springs) to connect turbines to compressors	+	+	+		+	
Torsion shafts to connect turbines to gearing	+	+	+		+	
Straightening vanes of compressors and turning vanes of reversing devices	+	+	+			
Flame tubes of combustion chambers, regenerators	+	+	+			
Reversing cylinders	+	+		+		
Gas and air lead tapes	+	+	+			
Gland seals	+	+				
Bearings	+	+				
Shrouds, lashing wire	+	+				
Couplings	+	+			+	
Bolts for turbine and compressors split casing joints	+	+	+			

5.6.2 During external examination of the finished gas turbine bed plate, it is necessary to be guided by the requirements of 5.2.2.

5.6.3 During external examination of the finished air suction inlet, the quality of welds and surface quality of detachable joints shall be assessed by visual testing. If the internal space of the inlet is used for cooling and condensing the oil vapour, the inlet shall be subjected to test for tightness of the internal space, upon completion of welding and machining.

5.6.4 During external examination of the finished turbine and compressor casings, it is necessary to be guided by the provisions of 5.4.2 as applied to their construction. Particular attention shall be given to the quality of the mated surfaces of the casings over the perimeter of their splits joined by bolts without use of gaskets to ensure gas and air tightness in operation. Such surfaces shall be checked for the lack of warpage. The check may be performed by placing the component on a surface plate. A feeler of 0,05 mm shall not pass between the

surface plate and the surface of the freely lying component to be checked. The quality of the mated surfaces shall not be lower than that required by the drawing.

During examination of the assembled compressor housings, particular attention shall be given to the quality of mounting of the metal-ceramic inserts of labyrinth glands, lack of mobility, surface quality. The quality of mounting of the straightening vanes and compliance of the flow areas with the requirements of the drawing shall be checked.

5.6.5 When examining the supporting rims of gas turbines, particular emphasis shall be placed on the quality of welds, treatment of surfaces matched with other assemblies, treatment of seats for rolling bearing races, quality of rivet joints. Loosening of rivets, incomplete rivet heads and their skewness shall not be admitted. Installation of jets to supply oil to bearing and their capacity shall be checked. Tightness of oil supply and drainage pipes shall be checked by connections and that of the pipes to supply air to labyrinth glands shall be also checked.

5.6.6 When examining the finished nozzle cascades, attention shall be given to the quality of weld and rivet joints and quality of mated surfaces. If there are cast components, attention shall be given to the quality of castings. The castings shall meet the requirements of the approved documentation. Particular emphasis shall be placed on the compliance of the nozzle cascade flow area with the requirements of the drawing and the compliance of the nozzle profile and surface roughness. The quality of welds by which the nozzles are welded on shall be checked by non-destructive testing. No cracks and poor penetration shall be admitted.

The nozzle cascades with nozzles cast therein after thorough cleaning shall be presented to the surveyor to check the quality of casting. Where there are poorly cast nozzles or nozzles with clear indications of burning, the nozzle cascades shall be rejected. Check for the absence of defects shall be performed by non-destructive testing methods.

When examining the nozzle cascades, the quality of metal-ceramic and honeycomb parts of the gland seals as well as the absence of warpage shall be checked.

No chipping of the metal ceramic components, dents on the honeycombs shall be admitted.

5.6.7 During external examination of diaphragms and straightening vanes, it is necessary to be guided by the provisions of 5.4.5.

5.6.8 During external examination of the finished compressor disks and journals and turbine disks, the quality of surfaces, blade rooting-in slots, compliance of component dimensions with the requirements of the drawing, results of special inspection types, heat treatment, dynamic balancing results shall be checked if so required by the drawing, prior to be mounted on the rotor. Besides, it is necessary to be guided by the provisions of 5.4.6.

5.6.9 When examining the finished moving blades of compressors and turbines, check shall be performed to cover roughness of the blade plate and root profile surfaces, leading and trailing edges, absence of dents and design of the blade locks.

The cast cooled turbine blades provided with cooling channels shall be checked for compliance of the wall thicknesses over all sections indicated in the drawing; along with that, the results of flow test of the channel shall be verified to determine its capacity. Particular attention shall be given to treatment of the leading and trailing edges. Blades having cracks, dents, thinned walls over the cooled channels, leading and cooled edges cannot be permitted for mounting in the rotor.

Cast and stamped moving blades of compressors and turbines shall be manufactured in accordance with the specifications approved by the Register. These specifications shall stipulate requirements imposed upon:

materials;

mechanical properties;

surface condition;

micro- and macro-examination;
special types of examination and tests;
special types of treatment;
charge materials;
casting inspection;
allowable defect rates.
Refer also to provisions of 5.4.7.

5.6.10 During external examination of the finished and bladed rotors of the turbines and compressors, it is necessary to be guided by the requirements of 5.4.9 as related to their construction.

It is necessary to give attention to the absence of visible defects (such as hollows and dents on blade edges, labyrinth gland strips, thread surfaces and splines) as well as cracks and corrosion.

Along with that, it is necessary to check:

.1 moving blade float, protrusion of blade ends out of the disk slots which, as against the adjacent blades, shall not exceed that allowed by the drawing;

.2 data sheets on moving blades, disks and shafts; attention shall be given to the results of dynamic balancing of rotors and testing of components for likely flaw (fluorescent testing of moving blades, dye penetrant testing of disks and ultrasonic testing of shafts);

.3 results of frequency inspection and annealing in inert gas environment as well as mounting of blade locking pieces and fastening of balancing weights.

In case of drum-and-disk construction of rotors, documents confirming the observance of the temperature conditions of disk heating and their press fit pressures shall be verified and the mounting of fixing pins in attachment of adjacent disks and journals to disks attachment shall be checked.

5.6.11 During external examination of the finished compressor and turbine shafts, attention shall be given to the quality of welding if the shafts are made of individual blanks welded together. Specifications for the manufacture thereof approved by the Register, which shall specify the welding method, heat treatment type, weld inspection methods, mechanical properties of shaft blank material after heat treatment and conditions of inspection of the shaft mechanical properties and welded joint.

No defects of the shaft welds shall be admitted.

The finished shafts shall be checked for compliance with the requirements of drawing as related to dimensions, surface roughness; along with that, the results of the dynamic shaft balancing shall be verified.

5.6.12 During external examination of the finished shafts (springs) to connect turbines to compressors and torsion shafts to gearing, the results of inspection of the shaft material for flaws, compliance of surface roughness, splines, seats for rolling bearings, etc. with the requirements of the drawing shall be checked.

5.6.13 During external examination of the finished straightening vanes of the compressors and pivoted reversing gear, their compliance with the requirements of approved drawings as related to dimensions, profile and surface roughness shall be checked.

5.6.14 The quality of welded joints of the finished combustion chambers and flame tubes shall be checked by visual testing; butt welds shall be subjected to radiographic inspection.

Swirlers of flame tubes shall be checked for the suitability of their flow area for the air discharge capacity. Air supply openings shall not be sealed with enamel by fusion. Free section of these openings shall be not less than that indicated in the flame tube drawing.

Moreover, as regards combustion chambers, flame tubes and regenerators, refer also to Section 9 of this Part and Section 5 of the Guidelines on Technical Supervision of Ships under Construction.

5.6.15 During external examination of the gas turbine reversing cylinders, the quality of internal working surface treatment, results of hydraulic tests shall be checked and all components of reverse control components examined.

5.6.16 During external examination of the finished air and gas lead tapes, the results of tape heat treatment and inspection for flaw, quality of weld (rivet) joints shall be checked; the tape plate shall be checked for the absence of warpage.

5.6.17 During external examination of the turbine gland seal components, it shall be verified that their working elements have been treated in accordance with the requirements of the approved documentation as related to clearance value and surface roughness and that the metal-ceramic inserts have no defects and mounted without play. Ceramic chipping and evaporated layer flaking shall not be admitted.

Sealing strip condition shall comply with the requirements of the drawing.

5.6.18 During external examination of the rolling bearings in is necessary to be sure that their types and dimensions comply with the requirements of the drawing of the assembly in which they are mounted. If heat resistant bearings shall be used, conventional bearings may not be mounted instead of them.

Bearing surfaces of races (outer and inner) of cages, ball and rollers shall not have cracks, corrosion, dents, spalling and other defects affecting reliable operation of the bearings.

If a loading device is used in the bearing assembly, calibration of the load produced shall be checked.

5.6.19 When examining the couplings and elastic couplings, it is necessary to be sure that the surfaces for fitting on shaft, rotor, flange joints, gear rings, key slots, openings, sleeves, pins, splines, elastic couplings have been treated in compliance with the requirements of the drawing. When the elastic coupling components are manufactured of titanium alloys, blanks shall comply with the specifications approved by the Register. When examining the finished components of titanium alloys, attention shall be given to roughness of treated surfaces, results of the special inspection types, heat treatment.

Upon completion of final assembly, the couplings and elastic couplings shall be subjected to dynamic balancing before being mounted in the subassembly (rotor, shaft, gear, etc) of the article.

5.6.20 External examination of the gas turbine piping shall be carried out during examination of the finished turbine mounted on the bedplate. While this is being done, it is necessary to be sure that all piping (lubricating oil, fuel oil, compressed air, CO_2 smothering, pipes for relieving inter-labyrinth spaces and others) have been mounted on the turbine in full compliance with the requirements of the approved documentation, flexible inserts of the fuel oil and lubricating oil pipes have been fitted without impermissible interference, bends, angularity and the like, which can result in the damage thereof; the quality of pipe welding, pipe joints comply with the requirements of the drawings; access is provided to the joints, burners and other assemblies which require maintenance in service.

5.6.21 When carrying out bench tests of GT and GTI, it is necessary to be guided by 5.12 and the following requirements:

.1 prior to GTI starting the following shall be checked:

thrust and main bearing clearances, using organic means;

interlocking of turning gear with starters;

axial displacement of rotors with the alarm being actuated and with subsequent interruption of fuel supply;

limit speed alarm and protection of propeller or electric generator drive applied to all sections and turbines;

alarm indicating subsequent interruption of fuel supply in case of cooling water pressure drop, cooling water temperature rise, lubrication system pressure drop and working medium temperature rise;

operation of fire protection arrangement;
fuel supply alarm and control based on air supply to HPC;
operation of GT under emergency mode scheme;
time of reversal from FSAH to FSAS and back;
time of turbine run-out;
run-away test;
readiness of GTI for starting;

.2 check shall be performed to cover false starting and motoring, time of operation of the starters, HPC speed, run-outs and GTI lubrication oil pressure;

.3 starting of the turbine shall be checked with measurement of starter current, time of starter operation and other basic parameters defining operation of the GTI during starting.

To be checked with the turbine running:
failure to switch on electric motors to drive the LPC and HPC up to speed;
failure to disconnect electric oil pumps of: turbine, reduction gear, driving compressor, automation system;
failure to provide reverse and "crush stop" condition when the turbine is in operation mode in excess of that permissible to execute manoeuvres (e.g. when the load exceeds 0,5 rated power);
failure to operate manually the air lead tape control push-button;
failure to actuate the ignition system;

.4 when the GTI is idling, check shall cover all parameters as well as the alarm:
"GTI oil pump in operation";
"Oil pump in automatic operation";
"Reduction gear oil pump in operation";
"Thermal limitation system put into operation";
"Air lead tape open";

.5 checks of the GT protection and the following checks shall be performed:
oil pressure protection for the turbine;
oil pressure protection for the GT driven machinery (reduction gear, electric generator, compressor);
fuel pressure protection;
starting thermal protection activation;
activation of thermal limitation system before the GT is put to operational mode;
activation of thermal limitation system in the GT operational modes;
agreement between the temperature gauges, exhaust gases with the set-point device of temperature regulator;
GTI pick-up;
activation of run-away protection;
starting fuel system tightness;
polarity in connection of thermocouples on temperature regulator;
inter-labyrinth space blow-off to determine that there is no oil blow-out;
operation of fuel pressure rise limiter;
turning on and off reserve fuel pump;
conservatism of the reversing system for air pressure drop;
absence of surging;
"crush stop" mode;
oil pressure protection for automation system;
run-away protection for propeller turbine;

.6 operation of the GTI shall be checked in the modes stipulated by the program, including reversing. During operation of the GTI in all modes, gas- and air-tightness of the GT casing joints along vertical and horizontal splits;

.7 GTI stoppage: normal, urgent and emergency shall be checked;

.8 bench tests of machinery driven by GT and inspection thereof shall be carried out in compliance with the provisions of 5.12;

.9 upon completion of the bench tests, the gas turbine shall be inspected with examination and test of all assemblies and components for flaws. During the inspection, moving blades of all turbine and compressor stages shall be subjected to fluorescent test and the nozzle cascades and HPT stages – to dye penetrant testing.

Depending on the structural features of GT, a list of other assemblies and components to be subjected to additional types of inspection shall be agreed with the RS Branch Office;

.10 upon completion of the inspection, the GT shall be assembled and subjected to check test on bench;

.11 check tests shall be carried out in accordance with the program approved by the RS Branch Office and whilst so doing, all parameters stipulated by the program shall be checked;

.12 where the results of the check tests are positive, the surveyor shall permit the turbine to be dismounted and completely built-up with assemblies and components which shall not undergo tests (e.g. warmth-insulating cases, fire extinguishing pipes, identification plates, etc);

.13 upon completion of building-up and painting, the turbine shall be presented to the surveyor for external examination. Where the results of the examination are satisfactory, the Surveyor shall issue the Register certificate.

5.7 GEARS AND DISENGAGING COUPLINGS OF MAIN AND AUXILIARY MACHINERY

5.7.1 Technical supervision during the manufacture of gears and disengaging couplings of main and auxiliary machinery, their assemblies and components shall be performed within the scope given in Table 5.7.1 and in accordance with the requirements of this Chapter and 5.12.

5.7.2 Reduction gear and coupling casings.

5.7.2.1 During external examination of the finished components of reduction gear casings to be performed upon completion of welding operations and heat treatment, it is necessary to be sure that:

welded joints, treated surfaces for foundation wedges, flange joints of individual casing parts and for bearing shells comply with the technical documentation;

inspection of welds for flaws, check for the alignment of seat bores for bearings of one shaft, check for the parallelism and misalignment of axes of shafts in engagement have been carried out by approved methods;

Table 5.7.1

Item of technical supervision	Examination of materials, blanks, assemblies, components	Verification of accompanying documents	Flaw detection	Hydraulic tests	Special tests	Bench tests
Gears, disengaging couplings of main machinery:						+
coupling and reduction gear casings	+	+	+	+		
gears and pinions	+	+	+		+	
reduction gears and coupling shafts	+	+	+		+	
detachable shaft half-couplings	+	+			+	
connecting bolts	+	+				
driving and driven parts	+	+			+	
elastic components of couplings	+	+				
bearings	+	+	+		+	
Gears of auxiliary machinery:						
coupling and reduction gear casings	+	+	+	+		+
gears and pinions	+	+	+		+	
reduction gear and coupling shafts	+	+	+		+	
bearings	+	+			+	

welds have been made with the required leg and have no defects;

individual parts of reduction gear casing have been joined together by the required number of calibrated bolts (pins) fixing the position of individual parts relative to each other;

reduction gear casing have been subjected to test for oil-tightness.

5.7.2.2 During external examination of the finished (upon completion of welding operations and heat treatment) coupling casing components, it is necessary to be sure that:

welded joints, treated surfaces of flange joints of individual casing parts, bores for bearing shells and seals, surfaces for foundation wedges comply with the requirements of the technical documentation;

inspection of welds for flaws, check for alignment of seat bores for bearings have been performed by approved methods;

constituent parts of coupling casing joined together by the required number of calibrated bolts (pins) fixing position of individual parts relative to each other;

casing of hydraulic coupling have been subjected to hydraulic test for tightness.

5.7.3 Gears and pinions.

5.7.3.1 During external examination of the finished gears, pinions and their components, it is necessary to be sure that:

treated surfaces for fitting, interferences provided, journals, key slots and heat treatment of gear rings comply with the requirements of the technical documentation;

teeth cutting parameters, perpendicular position of shaft axis to end faces, radial run-out have been checked and inspection of teeth for flaws have been performed by approved methods;

attachment of the ring to rim, rim to ribs, ribs to hub and hub to shaft complies to the requirements of the technical documentation.

5.7.3.2 The completely assembled and finished gear or pinion shall be subjected to the dynamic or only static balancing.

5.7.4 Reduction gear and coupling shafts.

5.7.4.1 During external examination of the finished reduction gear and coupling shafts, it is necessary to be sure that:

treated surfaces for fitting, journals and key slots comply with the requirements of the technical documentation;

radial run-out, parallelism of shaft axis to the generatrices of concentric surfaces have been checked and inspection for likely flaws has been performed by approved methods.

5.7.4.2 The finished shafts in association with half-couplings shall be subjected to the dynamic or only to static balancing.

5.7.5 Detachable shaft half-couplings.

During external examination of the finished detachable shaft half-couplings, it is necessary to be sure that:

treated surfaces, key slots, gear rings, holes for pressing in sleeves, sleeves and pins, holes for bolts and fitting on shaft comply with the technical documen-tation;

dynamic or only static balancing and finishing have been carried out in association with shaft, the need for balancing having been dictated by the need for the shaft balancing and the need for the finishing – by the results of check in assembly with the shaft.

5.7.6 Connecting bolts.

During external examination of the finished connecting bolts, it is necessary to be sure that:

treated surfaces for fitting, threaded joints comply with the technical documentation;

perpendicular position of the end faces snugged against the bolt axis, thread have been checked by an approved method.

5.7.7 Driving and driven parts of couplings.

5.7.7.1 During external examination of the finished parts of couplings, it is necessary to be sure that:

treated surfaces for the connection with the driving and driven shafts, interferences, surfaces for seals and for joining the coupling parts comply with the technical documentation;

concentricity of treated surfaces, heat treatment of the contact surfaces have been checked by an approved method.

5.7.7.2 The completely assembled driving and driven parts of the coupling shall be subjected to the dynamic or only static balancing.

5.7.7.3 The need for finishing shall be dictated by the results of checking the couplings in assembly with shafts.

5.7.8 Elastic coupling components.

During external examination of the elastic components of the couplings, check shall be performed to determine whether their construction, material and characteristics defining their operation comply with the working documentation.

5.7.9 Bearings of gears and disengaging couplings.

5.7.9.1 To be checked:

.1 sliding bearings (refer to 5.2.14);

.2 during external examination of rolling bearings, it is necessary to be sure that their dimensions and types comply with the requirements of the technical documentation. Bearing surfaces of the races, cages, balls and rollers shall have no cracks, corrosion, dents, spalling and other defects affecting reliable operation of the bearings.

5.7.10 On completing the survey of assemblies and components of the gears of the main engines, technical supervision during the mounting of the gear shall be performed; while this is being done, the following mounting operations shall be monitored:

installation of the gear (reduction gear) casing on wedges on the bench foundation with fixing of the position;

matching of the bearings to the seats;

matching of the bearings to the journals of regular or dummy shafts;

check of the centre-to-centre distances;

check for the lack of parallelism of the shaft axes;

check of the gear clearances;

establishment of the radial and axial bearing clearances;

check of the engagement by teeth contact (final check after bench tests);

mounting of the torsion shafts and their couplings;

alignment of the reduction gear with the regular driving power unit or bench power unit;

mounting of the systems serving the reduction gear;

alignment of the reduction gear with the loading device or through a coupling.

Check shall also cover the supply of lubricating oil to the toothing and bearings in accordance with the requirements of 4.2.4, Part IX "Machinery" of the Rules for the Classification and Construction of Sea-Going Ships.

N o t e . Check of the centre-to-centre distances, lack of parallelism of the shaft axes, misalignment of the axes and gear clearances shall be carried out on shafts related in pairs by engagement.

5.7.11 On completing survey of assemblies and components of the disengaging couplings of main machinery, it is necessary to perform technical supervision of mounting, the following operations being monitored:

installation of the stationary part of coupling (case, housing) on wedges, on the bench foundation;

mounting of the driving part of the coupling;

mounting of the driven part of the coupling;

matching of the radial-axial bearings to seats;

matching of the radial-axial bearings to journals of the driving and driven shafts with check for their alignment or by dummy shaft;

alignment of the driving and driven shafts;

alignment of the driving part of the coupling (shaft) with the regular power unit (reduction gear or power unit), bench reduction gear and driven part of the coupling (shaft), loading device;

mounting of the systems serving coupling.

5.7.12 When conducting bench tests of the main machinery gears, it is necessary to be guided by the requirements of 5.12 as well as the requirements specified below.

5.7.12.1 Testing of the gears shall be generally conducted with the regular driving power unit and/or coupling.

5.7.12.2 When conducting testing of a gear with the bench driving power unit, its operating modes shall meet the operating conditions when using the regular power unit; whilst so doing, the following shall be checked:

reversing by the driving power unit;

reversing provided for by the gear (reverse-reduction gear) construction;

reversing by the reverse-couplings;

change in the driving power unit speed;

change in the driving shaft speed provided for by the gear construction;

change in the speed through the use of the hydrodynamic torque converter;

disengaging of the gear from the driving power unit or load.

5.7.12.3 Operation of the attached machinery and mounting thereof shall be effected in compliance with the requirements of these Rules depending of the principle of operation and purpose of the machinery.

5.7.12.4 Time and load conditions of the gear tests are dictated by the requirements imposed on the regular driving power unit.

5.7.12.5 Upon completion of tests, the gear shall be subjected to inspection with examination of the following:

shafts;

pinions and gear wheels, built-in couplings, bearings,

to be checked shall be the gear contact the pattern of which shall be at least 90 per cent along the length and 60 per cent along the height of teeth, and in case of the gears of auxiliary machinery – at least 70 per cent along the length and 50 per cent along the height.

5.7.12.6 The gear shall be assembled, and the results of the component measurements and fixing measurements shall be verified at random.

5.7.12.7 Check tests shall be carried out with the necessary parameters being verified.

5.7.13 When conducting bench tests of the disengaging couplings of the main machinery, it is necessary to be guided by the requirements of 5.12 as well as the requirements specified below.

5.7.13.1 Test of the disengaging couplings shall be generally carried out with the regular driving power unit and/or reduction gear.

5.7.13.2 When the disengaging couplings are subjected to bench tests with the bench driving power unit, "power unit – reduction gear" set or reduction gear, operating modes shall meet the conditions of operation depending on the regular scheme which shall provide for;

reversing by the driving power unit or reverse-reduction gear;

change in the speed.

5.7.13.3 Depending on the coupling construction, the following shall be checked:

.1 spline, claw, tooth and friction couplings –

engagement and disengagement of the coupling with fixed and rotating driving shaft: ahead, astern, at different modes and speeds, if this is provided for by the construction and required by the service conditions;

operation of the coupling engagement mechanism;

whilst so doing, the following shall be recorded:

coupling temperature;

working medium pressure when the engagement mechanism is hydraulically driven;

limiting torque slipping, if envisaged;

.2 hydrodynamic torque converters, hydraulic couplings, electromagnetic couplings –

engagement and disengagement of the coupling with the fixed and rotating driving shaft: ahead, astern, at different modes and speeds, if this is provided for by the construction and required by the service conditions;

filling and emptying of the hydraulic couplings and hydrodynamic torque converters;

change in the driven shaft speed by the hydrodynamic torque converter at different loads and, should the need arise, change to the hydraulic coupling mode;

coupling slipping.

5.7.13.4 The electrical part of the electromagnetic couplings shall be tested in accordance with the requirements of Section 10.

5.7.13.5 During the tests, the following parameters shall be recorded:

oil temperature at the inlet and outlet;

time of the coupling filling and emptying;

discharge (delivery) of pumps serving the coupling during filling and replenishing leaks;

slipping.

5.7.13.6 Upon completion of tests, the couplings shall be subjected to inspection with the following being examined:

shafts;

contact surfaces;

seals;

bearings;

pumps;

engagement mechanisms.

5.7.13.7 The coupling shall be assembled with the results of component measurements and fixing measurements being verified at random.

5.7.13.8 Check tests shall be carried out with the necessary parameters being verified.

5.7.14 Technical supervision during the manufacture of the auxiliary machinery gears, their assemblies and components shall be performed within the scope given in Table 5.7.1 and in accordance with the applicable requirements of this Chapter and 5.12.

5.8 AUXILIARY MACHINERY

5.8.1 Technical supervision during the manufacture of the auxiliary machinery listed in Table 5.8.1 shall be performed in accordance with the requirements of 5.9 and of this Chapter.

Table 5.8.1

Item of technical supervision	Examination of materials, blanks, assemblies, components	Verification of accompa-nying documents	Flaw detection	Hydraulic tests	Special tests	Bench tests
Starting air compressors						+
Turbochargers						+
Main boiler blowers						+
Pumps:						
circulating pumps of main condensers						+
lubricating oil pumps of main engines and turbines						+
boiler feed water pumps						+
condensate pumps						+
boiler burner pumps						+
fuel oil transfer pumps						+
bilge pumps						+
fire pumps						+
ballast pumps						+
cargo oil pumps						+
main engine cooling pumps						+
Steam-jet ejectors of condensers						+
Circulating pumps of waste-heat boilers						+
Oil fuel and lubricating oil separators						+
Bilge ejectors						+
Fans (refer to 5.8.5)	+	+				+
Motors and pumps of hydraulic systems:						+
shafts and rotors	+	+				
rods	+	+				
pistons and plungers	+	+				
casings	+	+		+		
cylinders	+	+		+		
valves and pipes	+	+		+		
Submersible make-up sea water pumps of MODU						+
Jacking mechanisms of MODU						+
Arrangement for lifting and lowering pipers and make-up pumps of MODU						+

5.8.2 Steam-jet ejectors of condensers.

5.8.2.1 During external examination of the finished components of the steam-jet ejectors, it is necessary to be sure that:

design of the nozzles and casings complies with the working drawings;

nozzle throats have been checked by an approved method;

during the mounting of the ejector, position of the nozzle in casing in relation to the vacuum chamber have been checked.

5.8.2.2 The final adjustment shall be made during the bench tests at specified parameters; the following parameters being recorded:

steam pressure before the nozzles of all stages;

pressure of the steam and air mixture in heat exchanges of all stages;

amount of the dry air drawn off.

5.8.2.3 Technical supervision of the heat exchangers serving the steam-jet ejectors shall be performed in accordance with the requirements of Section 9 of the Guidelines on Technical Supervision of Ships under Construction.

5.8.3 Bilge ejectors.

The requirements of 5.8.2 shall be taken as guidance, the following paragraphs being recorded:

working medium pressure;

pressure in the vacuum chamber;

pressure at the outlet;

working medium consumption;

supply of the liquid to be drawn off.

5.8.4 Arrangements for lifting and lowering the columns of submersible sea water pumps of MODU.

Technical supervision of the arrangements for lifting and lowering the columns of submersible sea water pumps of MODU shall be performed in accordance with the applicable requirements of Rules for the Cargo Handling Gear of Sea-Going Ships.

5.8.5 Fans of machinery spaces, enclosed spaces and holds intended for carriage of vehicles, refrigerated spaces, fire extinguishing stations, cargo pump rooms, helicopter sheds, holds fitted for carriage of dangerous goods, storage battery rooms and boxes.

5.8.5.1 During external examination of the finished fan components, it is necessary to make sure that:

materials used comply with the technical documentation;

impeller has been subjected to the dynamic or only static balancing.

5.8.5.2 When checking the fan mounting for compliance with the requirements of the drawings, it is necessary to make sure that:

sliding bearings have been mated to the seats and journals and the required clearance provided;

required fixing radial and axial clearances between the impeller and casing have been established;

shaft has been aligned with the prime mover;

results of the component measurements and fixing measurements have been submitted by the technical supervision body for the mounting carried out;

checks have been carried out by approved methods.

5.8.5.3 When conducting the bench tests of the fans, the requirements of 5.9.5.7 and 5.12 shall be taken as guidance.

5.8.6 Motors and pumps of hydraulic systems.

5.8.6.1 Shafts and rotors.

5.8.6.2 Rods.

5.8.6.3 Pistons and plungers.

5.8.6.4 Casings.

5.8.6.5 Cylinders.

5.8.6.6 Technical supervision regarding 5.10.9.1 to 5.10.9.5 shall be performed in accordance with the requirements of 5.9, depending on the principle of operation of the pump.

5.8.6.7 Final check of the mounting of the variable delivery pumps and hydraulic motors shall be carried out during the check in operation.

5.8.6.8 When conducting bench tests of the variable delivery pumps and motors of the hydraulic systems, the requirements of 5.12 and the following requirements shall be taken as guidance:

.1 the following parameters shall be recorded:

power consumed;

capacity over the range from zero to maximum delivery or flow rate;

working fluid pressure;

working fluid temperature;

pressure in supporting systems;

.2 tests shall be conducted under the conditions where the delivery of the working fluid is changed from the maximum delivery in one direction to the maximum delivery in another direction;

.3 upon completion of the tests, the pump (motor) shall be inspected with examination of:

bearing surfaces for plungers,

plungers;

cylinder block;

gland seals;

pump serving the auxiliary systems;

.4 pump shall be assembled with the results of component measurements and fixing measurements being verified;

.5 check tests shall be conducted with verification of the necessary parameters.

5.9 COMPONENTS OF THE MACHINERY LISTED IN TABLE 5.8.1

5.9.1 Piston type pumps and compressors.

5.9.1.1 Cylinder blocks.

During external examination of the finished cylinder blocks, it is necessary to make certain that:

treated surfaces for fitting the cylinder liners and the surfaces mated with the crankcase, cover and one with another comply with the technical documentation;

concentricity of the bore axes, perpendicular position of the bore axis to the end faces have been checked by an approved method;

cylinder block is subjected to the hydraulic test in accordance with the requirements of 5.1.10.

5.9.1.2 Cylinder liners.

During external examination of the finished cylinder liners, it is necessary to make certain that:

treated surfaces for mounting liners in the block and mating with the cover comply with the technical documentation;

concentricity of the surfaces and perpendicular position of the bore axis to the collar plane have been checked by an approved method;

cylinder liners have been subjected to the hydraulic test in accordance with the requirements of 5.1.10.

5.9.1.3 Pistons.

During external examination of the finished pistons, it is necessary to make sure, that the concentricity of the surfaces, perpendicular position and intersection of the piston axis with the pin bore axis have been checked by an approved method.

5.9.1.4 Piston rods.

During external examination of the finished piston rods, it is necessary to make sure that:

mounting surfaces comply with the working drawings;

concentricity of the surfaces, perpendicular position or alignment of the rod axis with the surfaces of mating with the piston and crosshead have been checked by an approved method.

5.9.1.5 Connecting rods.

During external examination of the finished connecting rods, it is necessary to make sure that:

treated surfaces for the top-end and bottom-end bearings comply with the technical documentation;

parallelism of the axes of bores for the bearings or of the planes for mounting thereof and the parallelism of the bearing axes have been checked by an approved method.

5.9.1.6 Crankshafts.

During external examination of the finished crankshafts or their components in the built-up crankshafts, it is necessary to make sure that:

treated surfaces of journals and crank pins and the surfaces for mounting, interferences comply with the technical documentation;

crankshaft journals are aligned, the generatrices of the crank pins are parallel to those of the main journals, the setting angle of the crank throws, parallelism of the axes of holes for the press-fit of the crank webs and their perpendicular position to the end faces have been checked by approved methods.

5.9.1.7 Mounting of piston-type pumps and compressors.

During mounting of the piston-type pumps and compressors, in order to verify whether the mounting has been properly made and complies with the requirements of the documentation, it is necessary to make sure that:

cylinders in case of direct-acting pump are aligned;

crankshaft is placed in mated bearings; and whilst so doing, the axes of the cylinders are perpendicular to those of the crank throws when in dead centres (DC) and are parallel to the guides (parallels);

pistons when moving down from top dead centre (TDC) to bottom dead centre (BDC) retain constant circular clearance along their edge;

bearings of the running gear have been matched and mounted with a required clearances;

crankshaft has been aligned with the driving shaft;

measurement results for the mounting made shall be submitted by the technical supervision body; checks have been carried out by an approved method.

5.9.1.8 When conducting bench tests of the starting air compressors, the requirements of 5.12 shall be taken as guidance and it is necessary also to:

check the starting characteristics of the prime mover;

measure the power consumption over the range from idling running until the limiting pressure is reached;

check the operation of the automatic facilities for starting and shutting down the compressor at specified pressures, blowing off the moisture and oil separators;

check operation of the safety valves of all stages.

5.9.1.8.1 The following parameters shall be recorded during the tests:

capacity;

air temperature at the compressor inlet;

cooling water temperature at the inlet and outlet;

air pressure after each compressor stage.

5.9.1.8.2 Upon completion of the tests, the compressor shall be inspected; while this is being done, the cylinder liners, pistons, crankshaft, main and connecting rod bearings, inlet and outlet valves shall be examined.

5.9.1.8.3 Upon completion of the inspection and correction of all the defects detected, the compressor shall be assembled with random verification of the component measurement and fixing measurement results, whereupon check tests shall be conducted with the necessary parameters being verified.

5.9.1.9 When conducting bench tests of the power-driven and direct-acting steam pumps, the requirements of 5.12 and those specified below shall be taken as guidance.

5.9.1.9.1 Safety valves shall be checked.

5.9.1.9.2 The following parameters shall be recorded:

capacity;

suction pressure;

discharge pressure;

pumped medium temperature;

number of double strokes;

steam conditions and rate;

consumed power and characteristics of the prime mover for power-driven pumps.

5.9.1.9.3 Upon completion of the tests, the pump shall be inspected, while this is being done, the following components have to be checked:

cylinder liners, piston, suction and discharge valves and rods as well as:

for power-driven pumps:

crankshaft;

main bearings;

connecting rod bearings;

guides, parallels;

gears, reduction gears;

for direct-acting pumps:

steam cylinder liners;

steam cylinder pistons;
steam cylinder rods;
slide valve and slide valve boxes.

5.9.1.9.4 The pumps shall be assembled with the component measurement and fixing measurement results being verified at random, whereupon the check tests shall be conducted with verification of the necessary parameters.

5.9.2 Centrifugal and rotary pumps and compressors.

5.9.2.1 Shafts.

During external examination of the finished shafts, it is necessary to make certain that:

treated surfaces for mounting the working elements of the pumps, half-couplings and linings, interference fits and working journals comply with the technical documentation;

concentricity of the surfaces, run-out of the half-coupling end face have been checked by an approved method.

5.9.2.2 Impellers and rotors.

During external examination of the finished impellers and rotors, it is necessary to make certain that:

treated surfaces for mounting and glands comply with the technical documentation;

mating of the mounting surface, run-out of the faces, concentricity
of the surfaces have been checked by an approved method;

impellers and rotors have been subjected to the dynamic or static balancing.

5.9.2.3 Casings.

During external examination of the finished pump casings, it is necessary to make certain that:

treated surfaces of the glands and joints have been made and checked in accordance with the technical documentation;

concentricity of the bores, perpendicular position of the bore axis to the end joining face have been checked by an approved methods;

casing is subjected to the hydraulic test in accordance with 5.1.10.

5.9.2.4 When mounting the centrifugal and rotary pumps and compressors, for the purpose of checking the mounting that meets the requirements of the documentation, it is necessary to make sure that:

required radial and axial clearances in the sliding bearings, glands, between the casing and impeller (rotor) have been established;

shaft has been aligned with the prime mover;

measurement results have been presented for the mounting done;

checks have been carried out by an approved method.

5.9.2.5 When conducting the bench tests of the centrifugal and rotary pumps, the requirements of 5.12 shall be taken as guidance, also, it is necessary to:

.1 check the starting characteristics of the prime mover;

.2 record the power consumption for the compressors in the range from the idling running until the limiting pressure is achieved;

.3 check the automatic devices for starting and shutting down the pumps at the specified pressures;

.4 check operation of the safety valves;

.5 record the following parameters:

capacity (for the compressors – medium at the normal conditions);

suction and discharge pressure;

medium temperature (for the compressors – at the inlet and outlet);

.6 in case of the self-priming pumps, operation under dry suction condition shall be checked with the time of air draw-off being determined;

.7 upon completion of the tests, the machinery shall be inspected with the examination, as a rule, of:

shafts;

impellers and rotors;

casings;

shaft journals (in case of sliding bearings);

.8 upon completion of the inspection and correction of the defects, the machinery shall be assembled and subjected to the check tests with the necessary parameters being verified.

5.9.3 Screw and gear pumps and compressors.

5.9.3.1 Shafts and screws.

During external examination of the finished shafts and screws, it is necessary to make sure that:

treated surfaces for mounting, heat treatment comply with the technical documentation;

concentricity of the surfaces, screw surface and teeth profiles, heat treatment of the working surfaces have been checked by approved methods.

5.9.3.2 Casings.

5.9.3.2.1 During external examination of the finished casings, it is necessary to make sure that:

treated surfaces for mounting the screw housings, bearings, pinions and joining surfaces comply with the technical documentation;

concentricity of the bores for bearings with the bores for the operator bodies, centre-to-centre distances of the bores for the operator bodies and bearings, parallelism of the bore axes and their perpendicular position to the end faces have been checked by approved methods.

5.9.3.2.2 The casing shall be subjected to the hydraulic test in accordance with the requirements of 5.1.10.

5.9.3.3 Screw housings.

5.9.3.3.1 During external examination of the finished screw housings, it is necessary to make sure that:

treated surfaces for mountings, centre-to-centre distances of the bores for the screws comply with the technical documentation;

concentricity of the bores, perpendicular position of their generatrices to the end faces, parallelism of the bore axes one to another and to the common axis and the centre-to-centre distances of the bores have been checked by approved methods.

5.9.3.3.2 The screw housings shall be subjected to the hydraulic test in accordance with 5.1.10.

5.9.3.4 Pinions.

During external examination of the finished pinions, it is necessary to make sure that:

treated surfaces for mounting and heat treatment comply with the technical documentation;

tooth shape, toothing contact and heat treatment have been checked by approved methods.

5.9.3.5 When mounting the screw and gear pumps and compressors, in order to determine whether the mounting has been properly carried out and complies with the working documentation, it is necessary to make sure that:

required radial and axial clearances between the casing (housing) and operator body (pinions, screws) have been established;

required centre-to-centre distances and toothing contacts have been maintained;

driving shaft has been aligned with the prime mover;

measurement results for the mounting carried out have been submitted by the technical supervision body;

checks have been carried out by approved methods.

5.9.3.6 When conducting the bench tests of the screw and gear pumps and compressors, the requirements of 5.12 and the following requirements shall be taken as guidance:

.1 to check operation of the safety valves;

.2 to record the following parameters;

capacity (for compressors – medium at normal conditions);

suction and discharge pressure;

medium temperature (for compressors – at the inlet and outlet);

.3 in case of the wide range control of the screw pump and compressor capacity, the power in the range from the idling running up to the limiting pressure shall be recorded and when the capacity is constant – the specified operational power;

.4 upon completion of the tests, the machinery shall be inspected; whilst so doing, the following components shall be generally examined:

shafts and screws;

screw pump housings;

working spaces of the gear pumps;

gear pump casing covers;

pinions;

.5 upon completion of the inspection and correction of the defects detected, the machinery shall be assembled with the results of component measurements and fixing measurements being verified, whereupon the check tests shall be conducted with verification of the necessary parameters.

5.9.4 Oil fuel and lubricating oil separators.

5.9.4.1 Bowls and their shafts.

5.9.4.1.1 During external examination of the finished bowls and their shafts, it is necessary to make sure that:

treated surfaces for mounting and joints, including threaded ones, comply with the technical documentation;

concentricity of the treated surfaces, mating of the bearing surfaces including threaded ones, and flaw detection have been checked by approved methods.

5.9.4.1.2 The bowl in assembly and the shaft with the driven pinion shall be subjected jointly to the dynamic balancing.

5.9.4.2 Casings.

During external examination of the finished casings, it is necessary to make certain that:

treated surfaces for mountings and glands comply with the technical documentation;

alignment of the bores for the bearings of each one shaft, centre-to-centre distance of the bores and the angle at which the axes cross have been checked by approved methods.

5.9.4.3 Pinions.

During external examination of the finished pinions, it is necessary to make sure that:

treated surfaces including mounting ones and heat treatment comply with the technical documentation;

tooth shape, toothing contact, mounting surfaces and mating thereof, heat treatment have been checked by the approved methods.

5.9.4.4 When mounting the fuel oil and lubricating oil separators, in order to determine whether the mounting has been properly carried out and complies with the requirements of the technical documentation, it is necessary to make sure that:

required centre-to-centre distances and toothing contact have been maintained;

assembled separator is readily turned by hand;

driving shaft has been aligned with the prime mover;

results of the mounting measurements have been submitted by the technical supervision body;

checks have been carried out by approved methods.

5.9.4.5 When conducting the bench tests of the fuel oil and lubricating oil separators, the requirements of 5.12 and 5.9.4.5.1 to 5.9.4.5.5 shall be taken as guidance.

5.9.4.5.1 During the tests the following shall be checked:

starting characteristics of the separator;

separation quality;

operation of the friction coupling;

operation of the brake lock;

manual and automatic discharge systems of the self-cleaning separators;

separator operation in the automatic mode according to the program approved by the Register;

separator operation in the clarification and purification modes;

water consumption.

5.9.4.5.2 The following parameters shall be recorded during the tests:

pump capacity;

separator capacity;

temperature of the medium handled;

temperature of the washing water;

vibration and noise levels.

5.9.4.5.3 Tests shall be conducted on the fuel oil and lubricating oil at various viscosities to obtain the capacity recommended for the accepted viscosity.

5.9.4.5.4 Upon completion of the tests, the separator shall be inspected with examination of the following components:

bowl and its parts including verification of the results of the bowl inspection for likely flaws;

bowl shaft;

pinions;

friction coupling.

5.9.4.5.5 Upon completion of the inspection and correction of the detected defects, the separator shall be assembled with the results of the component measurements and fixing measurements being verified, whereupon the check tests shall be carried out with verification of the necessary parameters.

5.9.5 Gas turbochargers and air blowers.

5.9.5.1 Procedure for survey, approval, tests and component arrangement of the turbochargers with IC engines (refer to Appendix 9). For other machinery – refer to 5.9.5.2 – 5.9.5.9.

5.9.5.2 Shafts and rotors.

During external examination of the finished shafts, rotors and their components (impellers, disks), it is necessary to make sure that:

treated surfaces for mounting, interference fits comply with the technical documentation;

concentricity of the surfaces and absence of the defects have been checked by an approved method;

completely assembled rotor has been subjected to the dynamic balancing.

5.9.5.3 Gland seals.

During external examination of the finished gland seals, it is necessary to make sure that:

surfaces for mounting and working surface comply with the technical documentation;

concentricity of the surfaces and radial clearance have been checked by an approved method.

5.9.5.4 Casings.

During external examination of the finished casings of the turbochargers, it is necessary to make sure that:

treated surfaces for mounting, joint planes comply with the technical documentation;

alignment of the bores, perpendicular position of the bore axis to the end faces and the axial and radial clearances have been checked by an approved method.

5.9.5.5 Bearings.

During external examination of the finished sliding bearings, it is necessary to make sure that:

treated surfaces for the seat and journals comply with the technical documentation;

concentricity of the treated surfaces, perpendicular position of their axis to the end faces have been checked and the metallography has been made by an approved method.

5.9.5.6 When mounting the turbochargers, for the purpose of meeting the requirements of the working documentation, it is necessary to make sure that:

.1 rotor has been placed in accordance with the technical documentation in respect to:

mating of the bearings to the seats;

mating of the bearings to the journals and the establishment of clearances;

check of the radial and axial clearances in the blading and gland seals;

checks have been carried out by an approved method;

.2 results of measurements for the mounting carried out have been sub-mitted by the technical control body.

5.9.5.7 When conducting the bench tests of the turbochargers, the requirements of 5.12 and 5.9.5.7.1 – 5.9.5.7.3 shall be taken as guidance.

5.9.5.7.1 The following parameters shall be recorded:

for the working medium:

flow rate, temperature and pressure at the inlet and outlet;

time of speed-up when changing from one mode to another (acceleration);

in case of simulation – the power consumed;

for the air:

delivery;

temperature and pressure at the inlet and outlet.

5.9.5.7.2 Upon completion of the tests, the turbochargers shall be inspected with the following components being examined:

shaft and rotors;

gland seals;

casings;

bearings.

5.9.5.7.3 Upon completion of the inspection and correction of the defects detected, the check tests shall be conducted with the parameters obtained being verified.

5.9.5.8 In case of the large-scale (serial) production of the turbochargers, the requirements of 5.12 and 5.9.5.8.1 to 5.9.5.8.2 shall be taken as guidance.

5.9.5.8.1 Tests of the prototypes of the turbochargers for the purpose of issuing Type Approval Certificate shall be conducted on an especially equipped bench during 1 h at the maximum allowable service tempera-ture.

In well-grounded cases, these tests may be conducted on the engine for which the turbochargers are intended, when operating with an overload not less than 10 per cent of the rated output during 1 h.

5.9.5.8.2 Each turbocharger shall be subjected to tests at the maximum operational speed within 20 min.

In the well-founded cases, where there is a positive supervision experience over a long period of time, the duration of tests may be reduced to 10 min.

Tests may be conducted on the engine, if the turbocharger is a regular unit or will be such for similar engines. The duration of tests with the engine overload not less than 10 per cent of its rated output shall be at least 20 min.

Where a quality system meeting the approved standards is in prolonged and effective use in the turbocharger production, in deciding the number of specimens to be tested in a batch of similar turbochargers the statistical sampling principle may be used at the Surveyor's discretion.

5.9.5.9 When conducting the bench tests, the requirements for the recording parameters as set out in 5.9.5 and 5.12 shall be taken as guidance and whilst so doing, the consumed power and engine characteristics shall be recorded.

5.10 DECK MACHINERY

5.10.1 Supervision during the manufacture of the deck machinery shall be performed within the scope given in Table 5.10.1 and in accordance with the requirements of this Chapter.

5.10.2 Steering gear (engine).

5.10.2.1 Tillers of the main and standby gear.

During external examination of the finished tillers, it is necessary to make sure that:

treated surfaces for mounting on the rudder stock, interference fits and key ways comply with the technical documentation;

perpendicular position of the axis of bore for mounting to the end face, parallelism of the key way axes one to another and to the mounting bore axis, and for the hydraulic steering gear – perpendicular position of the tiller axis to the mounting bore axis have been checked by approved methods.

Table 5.10.1

Nos.	Item of technical supervision	Examination of materials, blanks, assemblies, components	Verification of accompa-nying documents	Flaw detection	Hydraulic tests	Special tests	Bench tests
1	Deck machinery:						
	steering gear (engine)						+
	tillers of main and standby gear	+	+	+			
	steering segments	+	+				
	rudder stock yoke	+	+				
	cylinders	+	+		+		
	pinions, gear wheels and tooth rims	+	+	+			
	pistons with rods	+	+				
	fittings and piping	+	+		+		
	drive shafts	+	+				
	connecting pins of tiller drive	+	+	+			
2	Windlasses and anchor capstans:						+
	driving and intermediate shafts, spindles	+	+				
	chain sprockets	+	+				
	pinions, gear wheels of power drives	+	+	+			
	disengaging and safety clutches	+	+				
	band and disk brakes	+	+				
3	Mooring capstans and winches:						+
	spindles, output shafts	+	+				
	pinions, gear wheels of power drives	+	+				
	safety clutches	+	+				
	band and disk brakes	+	+				
4	Towing winches:						+
	output and intermediate shafts	+	+				
	pinions and gear wheels of power drives	+	+	+			

Nos.	Item of technical supervision	Examination of materials, blanks, assemblies, components	Verification of accompa-nying documents	Flaw detection	Hydraulic tests	Special tests	Bench tests
	towline tension gove-rning devices and fairleads	+	+				
	brakes	+	+				
5	Boat winches:						+
	output and intermediate shafts	+	+				
	pinions, gear wheels of power drives	+	+				
	automatic and hand brakes	+	+				
	stoppers	+	+				

5.10.2.2 Steering segments.

During external examination of the finished steering segments, it is necessary to make sure that:

treated surfaces for mounting on the rudder stock, key ways, surfaces for fastening tooth rims, guides, where tiller rope is used, comply with the technical documentation;

perpendicular position of the mounting bore axis to the end face of the hub, parallelism of the key way axes one to another and to the mounting bore axis, parallelism of the generatrices of the surfaces for tooth rim to the rudder stock axis have been checked by approved methods.

5.10.2.3 Slides, yoke.

During external examination of the finished slides, it is necessary to make sure that:

treated sliding surfaces, surfaces for connection with the plungers, bores for mounting the hinge pivot bushes and tiller bushes comply with the technical documentation;

alignment of the bores for the hinge pivot bushes, perpendicular position of the pivot axes to the axis of the bore for the tiller bush, parallelism of the surfaces for connection with the plungers one to another and their perpendicular position to the sliding surface of the slide have been checked by approved methods.

5.10.2.4 Cylinders.

5.10.2.4.1 During external examination of the finished cylinders, it is necessary to make sure that:

treated surfaces for the gland seals and fastening comply with the technical documentation;

alignment of the bores, perpendicular position of the bore axis to the end faces have been checked by the approved methods.

5.10.2.4.2 The cylinders shall be subjected to hydraulic test in accordance with the requirements of 5.1.10.

5.10.2.5 Pinions, gear wheels and tooth rims.

During external examination of the finished pinions, gear wheels and tooth rims, it is necessary to make sure that:

treated surfaces for mounting, interference fits and heat treatment comply with the technical documentation;

tooth shape, toothing contact, perpendicular position of the mounting bore axis to the end faces, heat treatment have been checked by approved methods;

stipulated flaw detection has been carried out by an approved method.

5.10.2.6 Pistons with rods.

During external examination of the finished pistons with rods, it is necessary to make sure that:

treated surfaces for mounting and gland seals comply with the technical documentation;

concentricity of the surfaces, mating of the mounting surfaces, alignment or perpendicular position of the mounting surfaces to the axis have been checked by an approved method.

5.10.2.7 When mounting the steering gear, in order to meet the requirements of the working documentation, it is necessary to make sure that:

hydraulic cylinders have been installed coaxially in pairs and their axis is parallel to the bearing surface of the slide and to the datum plane;

bearing surface of the slide is parallel to the bearing surface of the frame;

tiller axis is parallel, while the axis of bore for the rudder head is perpendicular to the datum plane;

mounting and tests of the hydraulic system comply with the technical documentation;

safety valves have been checked and adjusted;

input shaft of the reduction gear has been aligned with the prime mover;

required contact in the engagement of the output reduction gear shaft pinion with the tooth rim of the steering segment and their centre-to-centre distance have been provided;

for reduction gears, refer to 5.7;

results of the mounting measurements and checks have been submitted by the technical control body;

checks have been carried out by approved methods.

5.10.2.8 When conducting bench tests of the steering gear the requirements of 5.12 and 5.10.2.8.1 to 5.10.2.8.11 shall be taken as guidance.

5.10.2.8.1 Power supply units shall be tested under no-load conditions.

5.10.2.8.2 The electrical equipment of the steering gear shall be tested and subjected to inspection in accordance with the requirements of Section 10 of the Guidelines on Technical Supervision of Ships under Construction.

5.10.2.8.3 No-load test of the steering gear with the tiller (segment) being put over on both sides to positions which differ from one another by 5° up to the hard-over angle and from the hard-over angle to zero angle by each unit in turn and by joint action of the units, where envisaged, from each steering position.

5.10.2.8.4 Test of the steering gear at 50 per cent load with the tiller (segment) being put over to hard-over angles on each side by each unit in turn from the main steering position, 120 cycles each time.

5.10.2.8.5 Test of the steering gear at 100 per cent load with the tiller (segment) being put over to hard-over angles on both sides by each unit in turn from the main steering position, 10 cycles each time.

5.10.2.8.6 Pump unit supplied as a spare unit shall be tested together with the steering gear under the following conditions:

under no-load conditions with the inoperative steering gear;

under no-load conditions with the steering gear operating at hard-over angles during 5 cycles;

under full pressure load conditions.

5.10.2.8.7 When testing the steering gear, the following parameters shall be recorded:

power consumed;

oil pressure in the power and auxiliary systems;

oil and air temperature;

tiller deflection angles and time required to put the tiller over.

5.10.2.8.8 In case of four-cylinder steering gears, operation on two cylinders following the proposed scheme shall be checked.

5.10.2.8.9 When testing the steering gear, it is necessary to check:

oil temperature, oil level and electric motor overloading alarm;

operation of the safety valves;

zero position of the control.

5.10.2.8.10 Upon completion of the test, the steering gear shall be inspected with the following components being generally examined:

hydraulic steering gear:

tiller, slides with yoke, cylinders, pumps;

electric steering gear:

segment rack rims, pinions, reduction gear, switching clutches (devices).

5.10.2.8.11 Upon completion of the inspection and correction of the defects, the steering gear shall be assembled with random verification of the results of components measurements and fixing measurements and the check tests shall be conducted with the necessary parameters being verified.

5.10.3 Windlasses and anchor capstans.

5.10.3.1 Drive and intermediate shafts, spindles.

During external examination of the finished drive, intermediate shafts and spindles, it is necessary to make sure that:

treated surfaces for mounting, journals comply with the technical documentation;

concentricity of the mounting surfaces, journals and the mating of the mounting surfaces have been checked by approved methods.

5.10.3.2 Chain sprockets.

During external examination of the finished chain sprockets, it is necessary to make sure that:

treated surfaces for mounting, contact surfaces comply with the technical documentation;

concentricity of the surfaces, perpendicular position of the bore axis to the end faces, mating of the mounting surfaces and contact surfaces of the clutches have been checked by approved methods.

5.10.3.3 Pinions, gear wheels of power drives.

During external examination of the finished pinions, gear wheels of power drives, it is necessary to make sure that:

treated surfaces for mounting, interference fits, heat treatment comply with the technical documentation;

tooth shape, toothing contact, mating of the mounting surfaces, perpendicular position of the bore axis to the end faces, concentricity and heat treatment have been checked by approved methods;

stipulated flaw detection has been carried out by an approved method.

5.10.3.4 Disengaging and safety couplings.

During external examination of the finished driving and driven parts of the disengaging and safety couplings, it is necessary to make sure that:

treated mounting surfaces, contact surfaces of the driving and driven parts of the couplings comply with the technical documentation;

mating of the contact surfaces and seats, concentricity of the bores and perpendicular position of their axes to the end faces have been checked by approved methods.

5.10.3.5 Band and disk brakes.

During external examination of the finished brake components, it is necessary to make sure that:

friction band (lining) material, construction, tension components, contact surfaces comply with the technical documentation;

contact surfaces, mating and adjustment thereof have been checked by approved methods;

brake band drive rotates readily by the effort of one man and is provided with a device to adjust fit of the brake band to the drum.

All surveys and tests of the sensors and actuators depending on their principle of operation have been dealt with in the relevant parts of the Rules.

5.10.3.6 When mounting the windlasses and anchor capstans, it is necessary to make sure that:

shafts have been placed in the bearings mated to the seats and journals;

axes of the shafts related in pairs by toothing are parallel and provide the required centre-to-centre distance, including the driving shaft of the reduction gear with drive pinion;

required toothing contact has been provided;

driving shaft of the reduction gear is aligned with the prime mover;

anchor chain links have been properly placed in the sprocket pockets;

safety coupling has been adjusted for the allowable torque;

in the disengaging couplings the required contact has been provided, "engaged" and "disengaged" positions fixed;

generatrices of the enveloping or end surfaces of the stationary brake part are parallel to those of the enveloped or end surfaces of the rotating brake parts;

results of the fixing measurements and those of the checks have been submitted by the technical supervision body;

checks have been carried out by an approved method.

5.10.3.7 When conducting bench tests of the windlasses and anchor capstans, the requirements of 5.12 shall be taken as guidance, and it is also necessary to carry out the following:

.1 no-load test. The windlass shall be run without load at nominal speed in each direction for a total of 30 min. If the windlass is provided with a gear change, additional run in each direction for 5 min at each gear change is required;

.2 load test. The windlass shall be tested to verify that the continuous pull, overload capacity and heaving-in speed as specified in 6.3, Part IX "Machinery" of the Rules for the Classification and Construction of Sea-Going Ships can be attained.

Where the firm (manufacturer) does not have adequate facilities, these tests, including the adjustment of the overload protection, may be carried out on board ship. In these cases, functional testing at the firm (manufacturer) shall be performed under no-load conditions, and this information is specified in the Certificate/report;

.3 brake capacity test. The holding power of the brake shall be verified either through testing or by calculation.

5.10.4 Mooring capstans and winches.

5.10.4.1 Spindles, output shafts.

5.10.4.2 Pinions, gear wheels.

5.10.4.3 Safety couplings.

5.10.4.4 Band and disk brakes.

5.10.4.5 Technical supervision regarding 5.10.4.1 to 5.10.4.4 shall be performed in accordance with the requirements of 5.10.3, as far as the similar components, mounting and bench tests are concerned.

5.10.5 Towing winches.

5.10.5.1 Output and intermediate shafts.

5.10.5.2 Pinions, gear wheels.

5.10.5.3 Brakes.

5.10.5.4 Technical supervision regarding 5.10.5.1 to 5.10.5.3 shall be performed in accordance with the requirements of 5.10.3, as far as the similar components, mounting and bench tests are concerned.

5.10.5.5 Towline tension governing devices, fairleads.

During external supervision of the finished towline tension governing devices and fairleads, it is necessary to make sure that:

contact surfaces and heat treatment thereof comply with the technical documentation;

all surveys of the sensors and actuators of the towline tension governing devices have been dealt with, depending on the principle of operation, in the relevant parts of the Rules;

final check of the machinery in operation has been carried out during the tests.

5.10.6 Boat winches.

5.10.6.1 Output and intermediate shafts.

5.10.6.2 Pinions, gear wheels of power drives.

5.10.6.3 Automatic and hand brakes.

5.10.6.4 Technical supervision regarding 5.10.6.1 to 5.10.6.3 shall be performed in accordance with 5.10.3, as far as the similar components, mounting and bench tests are concerned.

5.10.6.5 Stoppers.

Final check in operation shall be carried out during the bench test of the machinery.

The winches shall be tested by application of a static load that is 1,5 times greater than the maximum working load which shall be held by the brakes.

5.11 ENGINE-ROOM MECHANICAL TELEGRAPHS

5.11.1 During external examination of the engine-room mechanical telegraph components and the telegraphs in assembly, it is necessary to make sure that their construction and dimensions comply with the technical documentation with the fixed position of the handles and indicators. During the survey the telegraphs are subject to bench tests.

5.12 BENCH TESTS

5.12.1 Bench tests shall be carried out according to a program approved by the Register. Prior to the bench tests commencement, the following documents shall be submitted to the Surveyor:

.1 document of the technical control body on readiness of the bench for test of the machinery and on calibration of the loading device;

.2 bench equipment layout agreed with the surveyors (systems, machinery, devices, instruments serving the bench);

.3 document of the technical control body on performance of the firm's (manufacturer's) tests with presentation of the results for the controlled parameters;

.4 documents on the verification of the bench instrumentation or regular instruments;

.5 technical documentation for the manufacture and delivery of the product;

.6 test program;

.7 test procedure;

.8 description and operating instruction, the results of the component and fixing measurements, justification of the departures from the working drawings;

.9 machinery certificate;

.10 documentation on the related equipment when installed on the bench together with the machinery to be tested.

5.12.2 As a rule, interruption of the bench tests for more than 15 min due to faults will entail, depending on the cause, repetition of the interrupted operation, and in case of the renewal of the components, which are the items of the supervision, tests shall be repeated.

Based on the analysis of the causes of the test interruption, a conclusion shall be made about the arrangements to preclude the recurrence of the faults if they are not of sporadic nature.

If necessary, duration of the bench tests may be extended.

5.12.3 The test procedure shall be agreed upon with the Surveyor with due account of the operating instructions and bench equipment. All mounting and dismounting works shall be also performed according to instructions.

5.12.4 The inspection scope stipulated by the program may be changed by the Surveyor, depending on the test results and nature of the defects detected during the inspection.

5.12.5 Check tests after the inspection shall be conducted under the rated load conditions if the rated conditions and parameters are the basic ones in the operation of the machinery.

5.12.6 As a rule, the check test with the issuance of the documents in accordance with the RS Nomenclature is the closing stage of the survey for an item subject to technical supervision.

In case of satisfactory results during the bench tests and revision in accordance with the Register the check tests may not be performed.

5.12.7 The duration of the check tests stipulated by the program may be changed by the Surveyor, depending on the results of the bench tests and inspection.

5.12.8 The related equipment and its operational parameters shall be checked to the extent required for the bench tests of the supervised item, unless the related equipment itself is the subject of the bench tests. Check shall be carried out in compliance with the requirements of the Rules.

5.12.9 All the data necessary to issue the Register documents firm's (manufacturer's) documents for the material, components, related equipment, measurement results, etc.) shall be submitted for each supervised item.

5.12.10 If the technical supervision item has been presented to the Surveyor for conducting bench tests, all works on the machinery and on the bench shall be performed on agreement with the Surveyor.

5.12.11 The tests of a finished item shall be carried out in the following order:

.1 bench tests and inspection;

.2 check tests.

Satisfactory test results are a ground for issuance of the Register documents.

5.12.12 When conducting bench tests of the internal combustion engines and turbines, depending on the purpose thereof, the following peculiarities shall be taken into consideration:

.1 main internal combustion engines intended for driving the fixed pitch propellers (FPP) shall be tested according to the propeller curve under the ship free running conditions.

The methods of putting to the propeller curve and changing from mode to mode are subject to agreement with the Surveyor;

.2 main machinery (turbines) intended for driving the fixed pitch propellers and Voith-Schneider propellers (VSP) may be tested according to the propeller curve and at constant governor setting with putting to the rated power at constant revolutions;

.3 where the system CPP – engine (reduction gear, disengaging coupling, etc.) has structural features affecting the test performance, the order of the tests shall be agreed with the Register;

.4 engines (turbines) intended for driving generators, compressors, pumps and similar machinery shall be tested at constant governor setting with putting to the rated power at constant speed;

.5 when checking the operation of the speed governors, consideration shall be given to stable maintenance of the speed at steady state as well as to the speed deviations and time of speed stabilisation during throwing on and off the loads, which shall not fall outside the standards established by the Rules for the Classification and Construction of the Sea-Going Ships;

.6 when checking the operation of the overspeed device or trip, consideration shall be given to the speed at which the device or trip is activated.

5.12.13 The bench tests shall be conducted under conditions close to operational ones, that is at the normal pressure of the working medium before the turbines, normal ignition and combustion pressure for the internal combustion engines, at various loads of the unit, for which purpose the bench shall be fitted with devices that provide acquisition of the required characteristics of the unit tested.

To be tested simultaneously with the turbines and internal combustion engines are all their regular supporting auxiliaries: pumps, coolers, filters, etc.

Serial turbines and ICE may be tested without the regular auxiliaries and equipment, except when these auxiliaries and equipment are attached to the turbine or ICE or are an integral part of the turbine or ICE systems within the machinery. The bench auxiliaries and equipment shall in such case have characteristics similar to those of the regular auxiliaries and equipment.

5.12.14 In the process of the tests, the surveyor shall make sure that all parts of the turbines and internal combustion engines operate without abnormal heating, knocking, vibration; all connections and joints are tight and sound.

5.12.15 Requirements for duration and conditions of the bench tests of ICE (factory acceptance testing) specified in Appendix 7.

Duration of the turbine bench tests shall be assigned in compliance with Table 5.12.15.

Table 5.12.15

Operation mode characteristics	Duration of tests of turbines, at rated power, in kW					
Power in % of rated one	Over 10000	Below 10000	Below 5000	Below 1000	Below 500	Below 200
110	1,0	1,0	1,0	0,5	0,5	0,5
100	16,0	12,0	8,0	6,0	4,0	2,0
75	3,0	3,0	3,0	1,0	1,0	1,0
50	2,0	2,0	2,0	1,0	1,0	1,0
25	2,0	2,0	2,0	1,0	1,0	1,0
Idling	1,0	1,0	1,0	0,5	0,5	0,5
Astern	1,0	1,0	1,0	1,0	1,0	1,0
Tests of governor and independent runaway protection	+	+	+	+	+	+
Tests of "shut-down device"	+	+	+	+	+	+

5.12.16 During the check tests, the duration of operation at the rated power shall be equal to at least 25 per cent of the time indicated in Table 5.12.15, but in all cases not less than 30 min.

5.12.17 During the bench tests of the machinery jointly with the RC and RAC systems, it is necessary to be guided by the directions of Section 12, while conducting tests according to the program for the RC or RAC.

5.12.18 The test scope given in this Chapter pertains to the tests of the machinery in case of a stable production.

The prototypes of the machinery shall be tested on the bench according to the program approved by the Register.

The scope and duration of the tests shall be assigned in each particular case, depending on the degree of the machinery refinement.

The scope and duration of the type tests of the ICE for issuance of Type Approval Certificate are considered in Appendix 6 to this Section.

5.12.19 The prototypes of the engines intended for the use on the life-boats, during the bench tests, in addition to the requirements imposed on the bench tests by 5.12, shall be checked for compliance with the requirements of 6.13.6 and 6.15.4, Part II "Life-Saving Appliances" of the Rules for the Equipment of Sea-Going Ships.

5.12.20 Integration tests.

For electronically controlled engines, integration tests shall be made to verify that the response of the complete mechanical, hydraulic and electronic system is as predicted for all intended operational modes and the tests considered as a system shall be carried out at the manufacturer. If such tests are technically unfeasible at the works, however, these tests may be conducted during sea trial. The scope of these tests shall be agreed with the Register for selected cases based on the FMEA required in 1.2.3.1, Part IX "Machinery" of the Rules for the Classification and Construction of Sea-Going Ships.

5.12.21 On ships contracted for construction or conversion on or after 01.07.2020 the entity responsible of assembling the generating set shall install a rating plate marked with at least the following information:

.1 the generating set manufacturer’s name or mark;

.2 the set serial number;

.3 the set date of manufacture (month/year);

.4 the rated power (both in kW and KVA) specifying its nature as defined in ISO 8528-1:2018: COP (continuous power), or PRP (prime power) or LTP (limited-time running power). LTP is acceptable to be specified only for emergency Generating sets;

.5 the rated power factor;

.6 the set rated frequency (Hz);
.7 the set rated voltage (V);
.8 the set rated current (A);
.9 the mass (kg).

5.13 REGISTER DOCUMENTS

5.13.1 When the results of surveying the product on the manufacturer's bench are positive, the Register documents shall be issued in accordance with the RS Nomenclature.

5.13.2 The results of testing the prototype or pilot sample shall be presented in the Report to be drawn up by the Surveyor. The Report shall contain a conclusion as to the possibility of permitting the product to be used on board ship and, if necessary, the conditions for permitting the products concerned to be used on board ships, when manufactured subsequently in accordance with the provisions of Section 1.

5.14 REGISTER DOCUMENTS FOR TECHNICAL SUPERVISION DURING CONSTRUCTION AND APPROVAL OF ICE

5.14.1 The date of request for approval of ICE is the date of any document required/approved by the Register as a request for approval and issue of documents for each ICE.

5.14.2 Scope.

In 1.2.3.1, Part IX "Machinery" of the Rules for the Classification and Construction of Sea-Going Ships, the lists of the documents to be submitted to the Register for review and approval for confirming the ICE construction with the requirements of the Rules and used during their construction and installation.

In Appendix 2 to the present Section the list of documents to be submitted to the Surveyor to the Register for survey of ICE, units and systems at manufacturers' and the procedure for review and documents flow among a designer, Register (and its Branch Offices), a builder/a licensee as well as the Register Branch Office carrying out technical supervision for the construction of ICE.

5.14.3 Definitions.

Definitions relating to approval of ICE are given in Appendix 1.

5.14.4 General.

5.14.4.1 Procedure for approval.

.1 Type Approval Certificate of ICE (CTO).

For each type of ICE thatis required to be approved, a type approval certificate (Form 6.3.8-1) shall be obtained by the engine designer. The process details for obtaining a Type Approval Certificate are specified in 5.14.5.

This process consists of the engine designer obtaining:

approval of the ICE technical documentation;

conformity of production;

approval of type testing programmes;

type testing of ICE;

review of the obtained type testing results;

evaluation of the manufacturing arrangements;

issue of CTO upon satisfactory meeting the requirements of the Register rules.

.2 Certificate for ICE.

Each ICE manufactured for the RS-classed shipboard application shall have the ICE certificate (Form 6.5.30, or Form 6.5.31), if CO is available (refer to 4.5, Part I "General Regulations for Technical Supervision" of the Rules). Procedure for issue of the Certificate is specified in 5.14.4.2.2.8. This process consists of the ICE builder/licensee obtaining design approval of the ICE application specific documents, submitting a comparison list of the production drawings to the previously approved ICE design drawings referenced in 5.14.4.1.1, forwarding the relevant production drawings and comparison list for the use of the Surveyor to the Register at the manufacturing plant and shipyard if necessary, the ICE testing and upon satisfactorily meeting the Register Rules requirements, the issuance of an ICE certificate.

5.14.4.2 Document flow for ICE.

.1 document flow for obtaining a Type Approval Certificate (CTO):

.1.1 for the initial ICE type, the engine designer prepares the documentation in accordance with requirements in 1.2.3.1 of Part IX "Machinery" of the Rules for the Classification and Construction of Sea-Going Ships and forwards to the Register according to the agreed procedure for review (for the terms of review, cost, familiarization with General Conditions for Rendering Services by Russian Maritime Register of Shipping, security of payment, number of copes etc, also refer to 5.14.4.2.4);

.1.2 upon review and approval of the submitted documentation (evidence of approval), it is returned to the engine designer;

.1.3 the engine designer arranges for the Surveyor to the Register to attend an engine type test and upon satisfactory testing shall issue a type approval certificate (CTO);

.1.4 a representative document flow process for obtaining a Type Approval Certificate (CTO) is shown in Fig. 1, Appendix 2;

.2 document flow for ICE certificate:

.2.1 the Type Approval Certificate (CTO) of this type shall be issued for ICE. For the first prototype ICE the procedure for type approval and for approval of the prototype ICE may be single (refer to 5.7, Part I "General Regulations for Technical Supervision" of the Rules);

.2.2 when ICE is used in special cases or performance where the amendments to construction is required, the corrected documentation shall be forwarded by engine designer/ licenser to the ICE builder/ licensee for development of working documentation for production in compliance with Table 1, Appendix 2;

.2.3 ICE builder/licensee develops a comparison list of the production documentation to the documentation listed in 1.2.3.1, Part IX "Machinery" of the Rules for the Classification and Construction of Sea-Going Ships and forward it to the Register for review. An example comparison list is provided in Appendix 4. If there are differences in the technical content on the licensee's production drawings/ documents compared to the corresponding licensor's drawings, the licensee shall obtain agreement to such differences from the licensor using the sample template in Appendix 5.

If the designer acceptance is not confirmed the engines shall be regarded as a different engine type and shall be subjected to the complete type approval process by the licensee;

.2.4 the ICE builder/licensee shall submit the comparison list and the production documentation to the Register according to the agreed procedure for review/approval;

.2.5 the Register shall return documentation to the engine builder/licensee with confirmation that the design has been approved. The confirmation shall be carried out the RS stamp on the documentation (refer to 1.2.3.1, Part IX "Machinery" of the Rules for the Classification and Construction of Sea-Going Ships);

.2.6 the RS Surveyor participating in technical supervision at the engine builder/licensee/ subcontractors' firms shall issue product certificates as necessary for components manufactured upon satisfactory surveys and tests;

.2.7 the ICE builder/licensee assembles, tests the ICE with the RS Surveyor present. The ICE certificate is issued by the Surveyor upon satisfactory completion of assembly and tests;

.2.8 a representative document flow process for obtaining the ICE certificate is shown in Fig. 2, Appendix 2;

.3 approval of diesel engine components.

Components of the ICE designer's design which are covered by the Type Approval Certificate (CTO) of the relevant engine type are regarded as approved whether manufactured by the engine manufacturer or sub-supplied. For components of subcontractor's design, necessary approvals shall be obtained by the relevant suppliers (e.g. exhaust gas turbochargers, charge air coolers, etc.);

.4 submission format of documentation.

Documentation is submitted in electronic format taking into account the requirements for Sections 3 and 5, Part II "Technical Documentation".

5.14.5 Type approval procedure.

Type approval procedure shall be in compliance with 5.14.4. The document flow for this procedure is shown in Fig. 1, Appendix 2.

The documentation, as far as applicable to the type of engine, shall be submitted by the engine designer/licensor to the Register for review is listed in Tables 1.2.3.1-1 – 1.2.3.1-3, Part IX "Machinery" of the Rules for the Classification and Construction of Sea-Going Ships.

5.14.5.1 Documents for information.

Table 1.2.3.1-1, Part IX "Machinery" of the Rules for the Classification and Construction of Sea-Going Ships, lists basic descriptive information to provide the Register an overview of the ICE design, the ICE characteristics and performance. Additionally, there are requirements related to auxiliary systems for the engine's design including installation arrangements, list of capacities, technical specifications and requirements, along with information needed for maintenance and operation of ICE.

5.14.5.2 Documents for approval or recalculation.

Tables 1.2.3.1-2 and 1.2.3.1-3, Part IX "Machinery" of the Rules for the Classification and Construction of Sea-Going Ships, list of the documents and drawings which shall be approved by the Register.

5.14.5.3 Design approval/appraisal.

Compliance of design approval and appraisal to the requirements of the Register rules (approval of technical documentation) are valid as long as no substantial modifications have been implemented (also refer to Sections 9 and 10, Part II "Technical Documentation" of the Rules). Where substantial modifications have been made the validity of the design approval may be renewed based on evidence that the design is in conformance with all current RS Rules and statutory regulations (e.g. SOLAS-74, MARPOL 73/78). (also refer to 5.14.5.6).

5.14.5.4 Type approval test.

A type approval test shall be carried out in accordance with Appendix 6 and shall be witnessed by the Register.

The manufacturing facility of the engine presented for the type approval test shall be assessed in accordance with the regulations of Appendix 8.

5.14.5.5 Type approval certificate.

After the requirements in 5.14.5.1 — 5.14.5.4 have been satisfactorily completed the Register issues a Type Approval Certificate (CTO).

5.14.5.6 Design modifications.

After the Register has approved the ICE type for the first time, only those documents as listed in Tables 1.2.3.1-1 – 1.2.3.1-3, Part IX "Machinery" of the Rules for the Classification and Construction of Sea-Going Ships, which have undergone substantive changes, shall have to be resubmitted for review by the Register.

5.14.5.7 Type approval certificate renewals (with no testing).

A renewal of type approval certificates shall be granted upon:

.1 the submission of modified documents or new documents with substantial modifications replacing former documents compared to the previous submission(s) for design approval; or

.2 a declaration that no substantial modifications have been applied since the last design approval issued.

5.14.5.8 Validity of Type Approval Certificate (CTO).

The Register reserves the right to limit the duration of validity of the Type Approval Certificate (CTO). The Type Approval Certificate (CTO) shall be invalid if there are substantial modifications in the design, in the manufacturing or control processes or in the characteristics of the materials unless approved in advance by the Register.

5.14.5.9 Document review and approval.

.1 the assignment of documents for information according to 1.2.3.1, Part IX "Machinery" of the Rules for the Classification and Construction of Sea-Going Ships, does not preclude possible comments by the Register;

.2 where considered necessary, the Register may request further documents to be submitted. This may include details or evidence of existing type approval or proposals for a type testing programme in accordance with Appendix 6.

5.14.6 Certification process.

The Certification process consists of the steps in 5.14.6.1 – 5.14.6.5. The process is illustrated in Fig. 2, Appendix 2, showing the document flows between the

ICE designer/licensor;

ICE builder/licensee;

ICE component manufacturers (subcontractirs);

Register Head Office or the RS approval centres;

the RS Branch Offices (representatives etc).

For those cases when a licensor – licensee agreement does NOT apply, an "engine designer" shall be understood as the entity that has the design rights for the ICE type or is delegated by the entity having the design rights to modify the ICE design.

5.14.6.1 Document development for ICE production.

Prior to the start of the engine certification process, a design approval shall be obtained according to 5.14.5.1 to 5.14.5.3 for each type of ICE.

The engine designer/licensor reviews the documents listed in Tables 1.2.3.1-1 – 1.2.3.1-3, Part IX "Machinery" of the Rules for the Classification and Construction of Sea-Going Ships, for the application and develops, if necessary, application specific documentation for the use of the engine builder/licensee in developing ICE specific production documents.

If substantive changes have been made, the affected documents shall be resubmitted to the Register (refer to 5.14.5.6).

5.14.6.2 Documents to be submitted for the ICE inspection and testing.

Table 1 of Appendix 2 lists the production documents, which shall be submitted by the ICE builder/ licensee to the Register following acceptance by the ICE designer/licensor. The Register Surveyor uses the information for survey purposes during manufacture and testing of the ICE and its components (refer to 5.14.4.2.2.3 – 5.14.4.2.2.6).

5.14.6.3 Alternative execution.

If there are differences in the technical content on the licensee's production drawings compared to the corresponding licensor's drawings, the licensee shall provide to the Register approval centre a confirmation of the licensor's acceptance of licensee's modifications approved by the licensor and signed by licensee and licensor. Modifications applied by the licensee shall be provided with appropriate quality requirements. Refer to Appendix 5 for a sample format of the confirmation.

5.14.6.4 Manufacturer approval.

The Register assesses conformity of production with the Register's requirements for production facilities (refer to Section 12, Part I "General Regulations for Technical Supervision" of the Rules) comprising manufacturing facilities and processes, machining tools, quality assurance, testing facilities, etc (refer to Appendix 8).

Satisfactory conformance results in the issue of a class approval document (Forms 6.3.18 and 6.3.19) and other RS applicable documents.

5.14.6.5 Manufacturer's documents availability.

In addition to the documents listed in Appendix 2, the ICE builder/licensee shall be able to provide to the Register surveyor performing the survey upon request the relevant detail drawings, production quality control specifications and acceptance criteria.

5.14.6.6 ICE assembly and testing.

Each ICE assembly and testing procedure required according to the Register requirements shall be witnessed by the Register during technical supervision unless an Alternative Survey Scheme with the Agreement on Survey (CO) (refer to Chapter 4.5 of Part I "General Regulations for Technical Supervision").

5.14.7 If an NO_x reducing device is used to reduce NO_x emissions as a component of a marine diesel engine and/or NO_x exhaust monitoring system, systems shall be monitored according to Section 17.

APPENDIX 1

TERMS AND DEFINITIONS (APPLICABLE TO SECTION 5 "MACHINERY") (INTRODUCED IN STRICT CONFORMITY WITH APPENDIX 1 "GLOSSARY" OF IACS UR M44 (REV.8 MAR 2015))

Term	Definition
Acceptance criteria	A set of values or criteria which a design, product, service or process is required to conform with, in order to be considered in compliance
Accepted	Status of a design, product, service or process, which has been found to conform to specific acceptance criteria
Alternative Survey Scheme	Refer to 4.5, Part I "General Regulations for Technical Supervision" of the Rules (Agreement on Survey (CO)) Classification Societies – IACS members. Terms applicable to this procedure (IACS UR Z26):
	ABS: Product Quality Assurance
	BV: Alternative Survey Scheme
	CCS: Type Approval-A
	CRS: Examination of the manufacturing process and quality assurance system
	DNV-GL: Manufacturing Survey Arrangement
	IRS: IRS Quality Assurance Scheme
	KR: Quality Assurance System
	LR: LR Quality Schemes
	NK: Approval of Manufacturers
	RINA: Alternative Survey Scheme
Appraisal	Evaluation by a competent body
Approval	The granting of permission for a design, product, service or process to be used for a stated purpose under specific conditions based upon a satisfactory appraisal
Assembly	Equipment or a system made up of components or parts
Assess	Determine the degree of conformity of a design, product, service, process, system or organization with identified specifications, RS Rules, standards or other normative documents
Audit	Planned systematic and independent examination to determine whether the activities are documented, the documented activities are implemented, and the results meet the stated objectives
Auditor	Individual who has the qualifications and experience to perform audits
Certificate	A formal document attesting to the compliance of a design, product, service or process with acceptance criteria
Certification	A procedure whereby a design, product, service or process is approved in accordance with acceptance criteria
Class	Short for Classification Society (Register, RS)
Class approval	Approved by a Classification Society
Classification	Specific type of certification, which relates to the Rules of the relevant Classification Society
Competent body	Organization recognized as having appropriate knowledge and expertise in a specific area
Component	Part, member of equipment or system
Conformity	Where a design, product, process or service demonstrates compliance with its specific requirements
Contract	Agreement between two or more parties relating to the scope of service
Contractor	Refer to Supplier
Customer	Party who purchases or receives goods or services from another
Design	All relevant plans, documents, calculations described in the performance, installation and manufacturing of a product
Design analysis	Investigative methodology selectively used to assess the design
Design appraisal	Evaluation of all relevant plans, calculations and documents related to the design
Design review	Part of the appraisal process to evaluate specific aspects of the design
Drawings approval/ plan approval	Part of the design approval process which relates to the evaluation of drawings and plans
Equipment	Part of a system assembled from components
Equivalent	An acceptable but equally effective replacement that meets the established criteria
Examination	Assessment by a competent person to determine compliance with requirements

Term	Definition
Inspection	Examination of a design, product service or process by an Inspector
Inspection plan	List of tasks of inspection to be performed by the Inspector
Installation	The assembling and final placement of components, equipment and subsystems to permit operation of the system
Manufacturer	Party responsible for the manufacturing and quality of the product
Manufacturing process	Systematic series of actions directed towards manufacturing a product
Manufacturing process approval	Approval of the manufacturing process adopted by the manufacturer during production of a specific product
Material	Goods supplied by one manufacturer to another manufacturer that will require further forming or manufacturing before becoming a new product
Modification	A limited change that does not affect the current approval
Modification notice	Information about a design modification with new modification index or new drawing number replacing the earlier drawing
Performance test	Technical operation where a specific performance characteristic is determined
Producer	Refer to manufacturer
Product	Result of the manufacturing process
Prototype test	Investigations on the first or one of the first new ICE with regard to optimization, fine tuning of engine parameters and verification of the expected running behaviour
Quality assurance	All the planned and systematic activities implemented within the quality system, and demonstrated as needed to provide adequate confidence that an entity will fulfil requirements for quality. Refer to ISO 9000 series
Regulation	Rule or order issued by an executive authority or regulatory agency of a government and having the force of law
Repair	Restore to original or near original condition from the results of wear and tear or damages for a product or system in service
Requirement	Specified characteristics used for evaluation purposes
Information	Additional technical data or details supplementing the drawings requiring approval
Revision	Means to record changes in one or more particulars of design drawings or specifications
Specification	Technical data or particulars which are used to establish the suitability of materials, products, components or systems for their intended use
Substantive modifications or major modifications or major changes	Design modifications, which lead to alterations in the stress levels, operational behaviour, fatigue life or an effect on other components or characteristics of importance such as emissions
Subsupplier/subcontractor	One who contracts to supply material to another supplier
Supplier	One who contracts to furnish materials or design, products, service or components to a customer or user
Test	A technical operation that consists of the determination of one or more characteristics or performance of a given product, material, equipment, organism, physical phenomenon, process or service according to a specified procedure. A technical operation to determine if one or more characteristic(s) or performance of a product, process or service satisfies specific requirements
Traceability	Ability to follow back through the design and manufacturing process to the origin
Type approval	The establishment of the acceptability of a product through the systematic: 1. Evaluation of a design to determine conformance with specifications 2. Witnessing manufacture and testing of a type of product to determine compliance with the specification 3. Evaluation of the manufacturing arrangements to confirm that the product can be consistently produced in accordance with the specification
Type approval test	Last step of the type approval procedure in accordance with the approved programme (refer to Appendix 6)
Witness	Individual physically present at a test and being able to record and give evidence about its outcome

APPENDIX 2

PROCEDURE DOCUMENTATION FLOW

Documentation for the inspection of the ICE components and systems during their construction and tests applicable to the engine assignment is specified in the Table below. Adequacy of the ICE design and assignment shall be in compliance with 1.2, 3.3 and 3.4 of Appendix 6.

Table 1

Documentation for the survey of ICE components and systems[1]

No.	Item
1	ICE particulars as per data sheet in Appendix 3
2	Material specifications of main parts with information on non-destructive material tests and pressure tests[2]
3	Bedplate and crankcase of welded design, with welding details and welding instructions[3]
4	Thrust bearing bedplate of welded design, with welding details and welding instructions[3]
5	Frame/framebox/gearbox of welded design, with welding details and instructions[3]
6	Crankshaft, assembly and details
7	Thrust shaft or intermediate shaft (if integral with engine)
8	Shaft coupling bolts
9	Bolts and studs for main bearings
10	Bolts and studs for cylinder heads and exhaust valve (two stroke design)
11	Bolts and studs for connecting rods
12	Tie rods
	Schematic layout or other equivalent documents on the engine of[4]:
13	starting air system
14	fuel oil system
15	lubricating oil system
16	cooling water system
17	hydraulic system
18	hydraulic system (for valve lift)
19	engine control and safety system
20	Shielding of high pressure fuel pipes, assembly[5]
21	Construction of accumulators for hydraulic oil and fuel oil
22	High pressure parts for fuel oil injection system[6]
23	Arrangement and details of the crankcase explosion relief valve (refer to 2.3.4, Part IX "Machinery" of the Rules for the Classification and Construction of Sea-Going Ships)[7]
24	Oil mist detection and/or alternative alarm arrangements (refer to 2.3.3.8 – 2.3.3.22, Part IX "Machinery" of the Rules for the Classification and Construction of Sea-Going Ships)
25	Cylinder head
26	Cylinder block, engine block
27	Cylinder liner
28	Counterweights (if not integral with crankshaft), including fastening
29	Connecting rod with cap
30	Crosshead
31	Piston rod
32	Piston, assembly[8]
33	Piston head
34	Camshaft drive, assembly[8]
35	Flywheel
36	Arrangement of foundation (for main engines only)
37	Fuel oil injection pump

No.	Item
38	Shielding and insulation of exhaust pipes and other parts of high temperature which may be impinged as a result of a fuel system failure, assembly
39	Construction and arrangement of dampers For electronically controlled engines, assembly drawings or arrangements of:
40	Control valves
41	High-pressure pumps
42	Drive for high pressure pumps
43	Valve bodies, if applicable
44	Operation and service manuals[9]
45	Test program resulting from FMEA (for engine control system)[10]
46	Production specifications for castings and welding (sequence)
47	Type approval certification for environmental tests, control components[11]
48	Quality requirements for engine production

[1] For gas ICE additionally refer to Table 1.2.3.1-3 of Part IX "Machinery" of the Rules for the Classification and Construction of Sea-Going Ships.
[2] For comparison with the Register requirements for material, NDT and pressure testing as applicable.
[3] For approval of materials and weld procedure specifications. The weld procedure specification is to include details of pre and post weld heat treatment, weld consumables and fit-up conditions.
[4] Details of the system so far as supplied by the engine manufacturer such as: main dimensions, operating media and maximum working pressures.
[5] All engines.
[6] The documentation to contain specifications for pressures, pipe dimensions and materials.
[7] Only for engines of a cylinder diameter of 200 mm or more or a crankcase volume of 0,6 m^3 or more.
[8] Including identification (e.g. drawing number) of components.
[9] Operation and service manuals shall contain maintenance requirements (servicing and repair) including details of any special tools and gauges that shall be used with their fitting/settings together with any test requirements on completion of maintenance.
[10] Required for engines that rely on hydraulic, pneumatic or electronic control of fuel injection and/or valves
[11] Documents modified by designer/licenser with ICE design for a specific application or performance shall be submitted to the Register for information or approval, as applicable (refer to 5.14.4.2.2.2).

Fig. 1 presents the representative document flow diagrams for the ICE typical approval.

The document flow diagrams (refer to Fig.1) are provided as an aid to all parties involved in the ICE survey as to their roles and responsibilities. Variations in the document flow may vary in response to unique issues with regard to various factors related to location, availability of components and surveys. In any case, the text in the Rules takes precedence over these flow diagrams.

Fig. 2 presents the ICE FAT (ICE Bench test) documents flow.

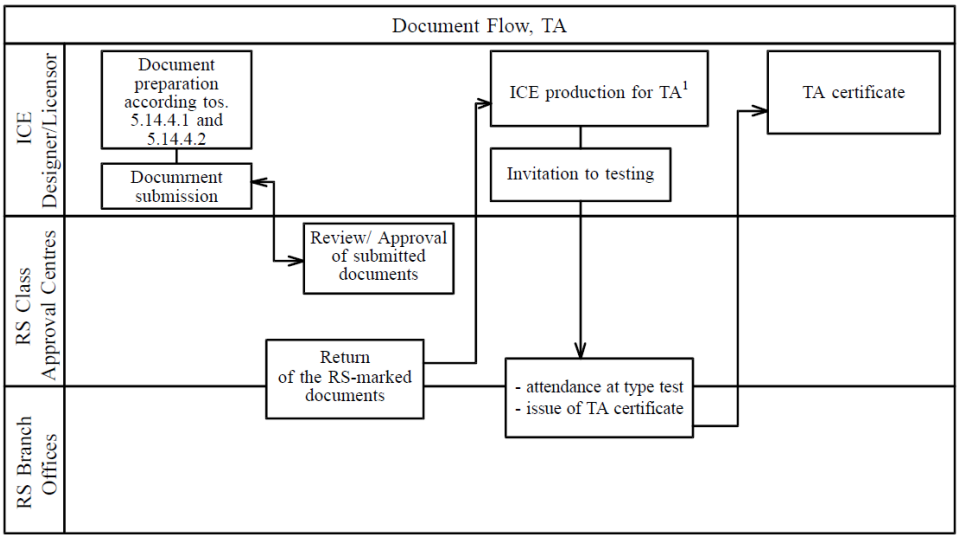

[1] May also be produced by licensee

Fig. 1
ICE Type approval document flow

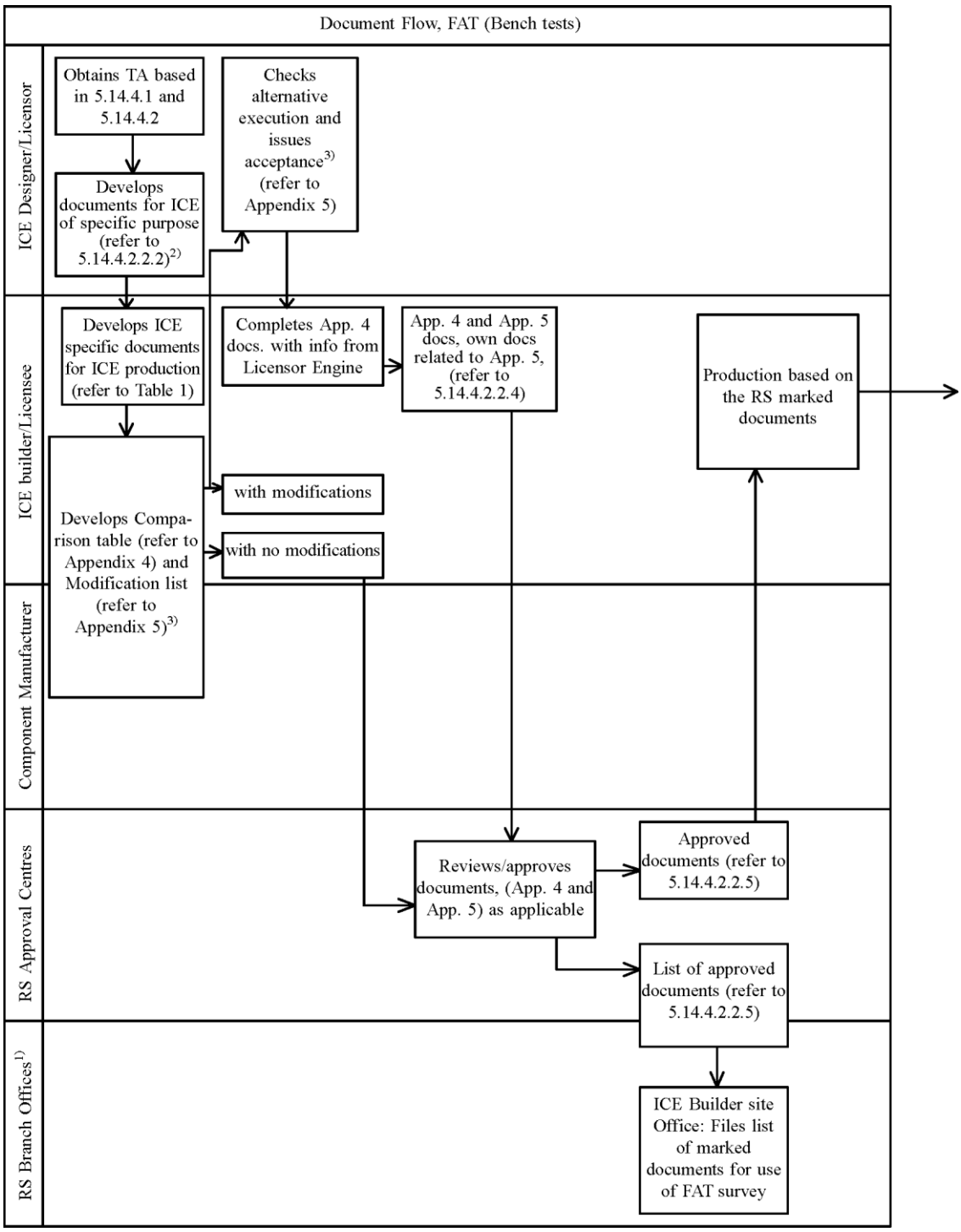

Fig. 2
Document Flow, FAT (ICE Bench test documents flow)

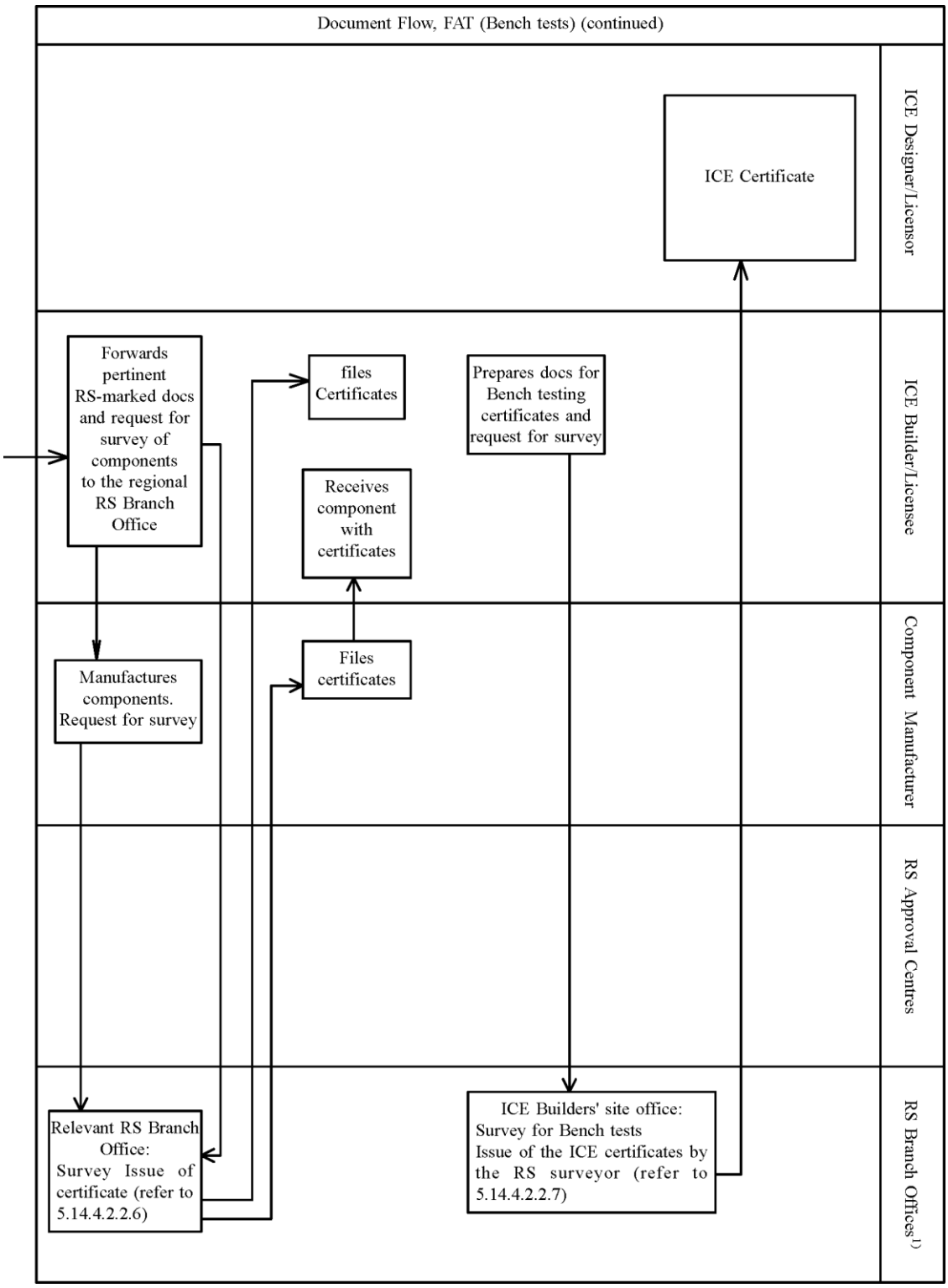

1) RS Branch Office with responsibility for ICE builder and/or component manufacturers in different locations
2) For alternative execution (refer to 5.14.6.3)
3) Performance of 5.14.4.2.2.3, if required.

Fig. 2
Document Flow, FAT (ICE Bench test documents flow) (continued)

APPENDIX 3

INTERNAL COMBUSTION ENGINE TYPE APPROVAL APPLICATION FORM AND BASIC DATA SHEET (IN COMPLIANCE WITH APPENDIX 3, IACS UR M44 (REV9, CORR.2))

UR M44 (Rev.9,Corr.2) – APPENDIX 3 – Internal Combustion Engine Approval Application Form and Data Sheet

№ заявки в базе данных Регистра:
Class Application number:

№ заявки изготовителя ДВС (если применимо):
Engine Manufacturer's Application Identification Number:

Общие данные General Data	
Проектант ДВС Engine Designer: _____ Контактное лицо: Должность: Contact Person: Position: (ФИО/Name) Адрес: _____ Address: _____ _____	Изготовитель(ли) ДВС, лицензиат(ы) и/или сайт изготовителя _____ Страна Engine Manufacturers), Licensee(S) and/or Manufacturing Sites*Name _____Country

1. Назначение документа (выбрать 1 а или 1 в) Document purpose *(select options from either 1a or 1b)*	
1.a. Типовое одобрение/Type Approval Application	
Запрашиваемая услуга Service Requested ☐ **Новое типовое одобрение** (ТО) New Type Approval ☐ Возобновление ТО Renew of Type Approval ☐ Изменение ТО Amend Type Approval ☐ Заключение по проекту Design Evaluation ☐ Обновление приложения Update TA Supplement ☐ Иное: Other:	*Необходимые мероприятия†* *Reauired activities†* • *ОП – Оценка проекта* *ТИ – Типовые испытания* *ОСП – Оценка соответствия производства* • *DA – Design Appraisal* *TT – Type Test* *Cop – Conformity Of Production* • ОСП / *CoP, если в проект вносятся изменения или оформление нового Свидетельства должно быть следствием этого / if design change then amended or new Certificate process to be followed* • ОП и ОСП / *DA & CoP, Далее – ТИ, если предварительно одобренный ДВС был существенно модифицирован / Further- TT, if previously approved engine has been substantively modified (как требуется UR M71 / as required by UR M71)* • ОП, ТИ / *DA, TT, для случая, когда разработчик не имеет собственного производства СТО запрашивается для конкретного изготовителя когда ОСП было завершено / applicable where designer does not have production facilities, Type Approval to be granted to specific production facility once associated CoP has been completed* • *Изменения в Приложении только для случая незначительных изменений, не влияющие на СТО Update to Supplement, only for minor changes not affecting the Type Approval Certificate* • *Национальные/конвенционные требования МА РФ и т.е. MSC.81 (70) для двигателей, используемых в качестве аварийного привода/ e.g. National / Statutory Administration requirements i.e. MSC.81 (70) for emergency engines*
Для изменения СТО или Приложения указание какие именно данные подлежат изменению For TA Cert amendments or Supplement updates, details of what is to be changed:	
Для "Иное" уточнение требований, подлежащих рассмотрению For "Other", Details of the requirements to be considered:	

1b. Дополнительно для стендовых испытаний и оформления Свидетельства для отдельного двигателя Addendum for Individual Engine FAT and Certification	
☐	Отдельные ДВС подлежат стендовым (заводским приемочным) испытаниям с оформлением сертификата только когда параметры двигателя отличаются отданных, указанных в оригинальной заявке на типовое одобрение. При этом должен быть заполнен Раздел 3b. В случае внесения изменений в другие Разделы может быть затребовано оформление нового СТО. Individual engine requiring FAT and Certification, only where the performance data for the engine being certified differs from the details provided on the original Type Approval Application. Only section 3b requires completion. Where changes to other sections are necessary, a new Type Approval Application may be required.
Ссылка на № ранее оформленного СТО и письма-заявки на его оформление Reference number of *Internal Combustion Engine Approval Application Form (Letter of enquiry)* previously submitted and reference number of the Type Approval Certificate.	_____ *(Копия заявки д.б. приложена к настоящей Форме)* *(Copy of original application form to be attached to this document)*

2. Имеющаяся документация Existing documentation			
Ранее оформленное СТО или Письмо об одобрении (если применимо) Previous Class Type Approval Certificate No. or related Design Approval No. *(if applicable)*			
Выдается документация для двигателя *(Например: предыдущие протоколы испытаний типа , отчеты в обслуживании опыт обоснование и т.д.)* Formerly issued documentation for engine *(E.g. previous type test reports, in-service experience justification reports, etc.)*	Кем выдано: Issuing Body:	Вид документа: Document Type:	Документ № Document No.:
Имеющаяся сертификация (Свидетельство соответствия СК ИСО 9001 и т.д.) Existing Certification *(E.g. Manufacturer's quality certification ISO 9001 etc.)*	Кем выдано: Issuing Body:	Вид документа: Document Type:	Документ № Document No.:

3. Модель *(отметьте все подходящие варианты)* Design *(mark all that apply)*					
3a. Описание двигателя: Engine Particulars:					
Назначение Application	☐ Главный с передачей мощности на гр.винт Direct drive Propulsion	☐ Вспомогательный привод Auxiliary		☐ Аварийный привод Emergency	
	☐ Одномашинная установка Single engine	☐ Многомашинная установка Multi-engine installation	☐ Для вспомогательных нужд Aux-Services	☐ Для электродвижения Electric Propulsion	
Тип двигателя Engine Type			Число поставленных двигателей морского исполнения*: Number of delivered marine engines*:		
Изготовление с‡ Manufactured Since‡:					
Конструктивное исполнение Mechanical Design	☐ Двухтактный 2-strok	☐ Четырехтактный 4-strok	☐ Рядный In-line	☐ V-образн. V-angle (_____°)	☐ Иное Other
	☐ Крейцкофный Cross-head	☐ Тронковый Trunk-piston	☐ Реверсивный Reversible	☐ Нереверсивный Nomreversible	
	Диаметр цилиндра, мм Cylinder bore (mm)		Ход поршня (мм) Legth of piston stroke (mm)		
Наддув Supercharging	☐ Без наддува Without of supercharging	☐ С наддувом With supercharging			
		☐ Без охлаждения наддувочного воздуха Without charge air cooling	☐ С охлаждением воздуха наддува With charge air cooling		
		☐ Система наддува с постоянным давлением Constant-pressure charging system	☐ Система импульсного наддува Pulsating pressure charging system		
Работа клапанов Valve operation		☐ Управление кулачковым р/валом CAM control	☐ Электронное управление Electronic control		

Впрыск топлива Fuel Injection	☐ Непосредственный впрыск Direct injection	☐ Непрямой впрыск Indirect injection	☐ Управляемый впрыск через р/вал CAM controlled Injection	☐ Электронно-управляемый впрыск Electronically controlled injection

Тип топлива (по ISO 8216) Fuel Types (in acc.to ISO 8216)	☐ Морское тяжелое топливо Marine residual fuel ☐ Морское дистиллятное топливо Marine distillate fuel ☐ Морское дистиллятное топливо Marine distillate fuel ☐ Топливо с низкой температурой вспышки Low flashpoint liquid fuel ☐ Газ Gas ☐ Другие Other ☐ Двухтопливный Dual fuel	cSt при/at 50 °C DMA, DMB. DMC DMX

3b Данные о параметрах (при барометрическим давлением 1.000 мбар; Температуре воздуха 450, относительной влажности 60 %. температуре забортной воды 32°C)
Performance Data (Related to: Barometric pressure 1.000 mbar: Air temperature 45 °C: Relative humidity 60 %: Seawater temperature 32°C)

Ссылка на модель No.(если применимо) Model reference No.(if applicable)					
Макс. длит.мощность Max. continuous rating	кВт/цил kWt/cyl				
Расчетная частота вращения Rated speed	об/мин 1/min				
Ср.индикаторное давление Mean indicated pressure	МПа MPa				
Ср.эффективное давление Mean effective pressure	МПа MPa				
Максимальное давление сгорания Max.firing pressure	МПа MPa				
Давление наддува Charge air pressure	МПа MPa				
Степень сжатия Compression ratio	–				
Ср.скорость поршня Mean piston speed	м/с m/s				

3c. Коленчатый вал
Crankshaft

Исполнение/конструкция Design	☐ Цельный (сплошной) Solid		☐ Полу составной Semi-built	☐ Составной Built
Способ изготовления Method of Manufacture	☐ Литье Cast	☐ Ковка Forged ☐ Ковка из сляба Slab forged	☐ Горячая объемная штамповка Open die forged	☐ Ковка с высадкой Continuous grain flow process
Заявленное предприятие по ковке/наименование работ: State approval forge/works name:				
Применяется ли поверхностное упрочнение коленчатого вала одобренным методом, включая галтели рамовых и шатунных шеек? Is the crankshaft hardened by an approved process, which includes the fillet radii of crankpins and journals?				☐ Да Yes ☐ Нет No
Свойства материала к/вала Crankshaft material specification				

Предел прочности (Н/мм^2) U.T.S. (N/mm^2)	Предел текучести (Н/мм^2) Yield strength (N/mm^2)
Твердость (по Брюнеллю/Виккерсу) Harness value (Brinell/Vickers)	Относительное удлинение (%) Elongation (%)
Данные измерений Dimensional Data	
Допустимые значения натяга в случае прессового соединения щек и шеек коленчатого вала (мм) If shrink on webs, state shrinkage allowance (mm)	Предел текучести материала щеки коленчатого вала (Н/мм^2) Yield strength of crankweb material (N/mm^2)
Расположение центра тяжести шатуна от центра нижней головки шатуна (мм) Centre of gravity of connecting rod from large end centre (mm)	Радиус вращения центра шатунной шейки (мм) Radius of gyration of connecting rod (mm)
Масса каждой щеки кривошипа (кг) Mass of each crankweb (kg)	Центр тяжести щеки кривошипа от оси шатунной шейки (мм) Centre of gravity of web from journal axis (mm)
Масса каждого противовеса (кг) Mass of each counterweight (kg)	Расположение центра тяжести каждого противовеса от оси шатунной шейки (мм) Centre of gravity of each counterweight from journal axis (mm)

Ширина рамового подшипника (мм) Axial length of main bearing (mm)	Рабочий зазор в рамовом подшипнике (мм) Main bearing working clearance (mm)
Масса маховика на фланце коленчатого вала (кг) Mass of flywheel at driving end (kg)	Масса маховика на противоположной стороне коленчатого вала (кг) Mass of flywheel at opposite end (kg)
Номинальное переменное напряжение кручения в шатунной шейке (Н/мм^2) Nominal alternating torsional stress in crankpin (N/mm^2)	Номинальное переменное напряжение кручения в рамовой шейке (Н/мм^2) Nominal alternating torsional stress in crank journal (N/mm^2)
Расстояние между центрами (Общая длина) (мм) Length between centres (Total length) (mm)	

3d. Порядок вспышек в цилиндрах
Firing order

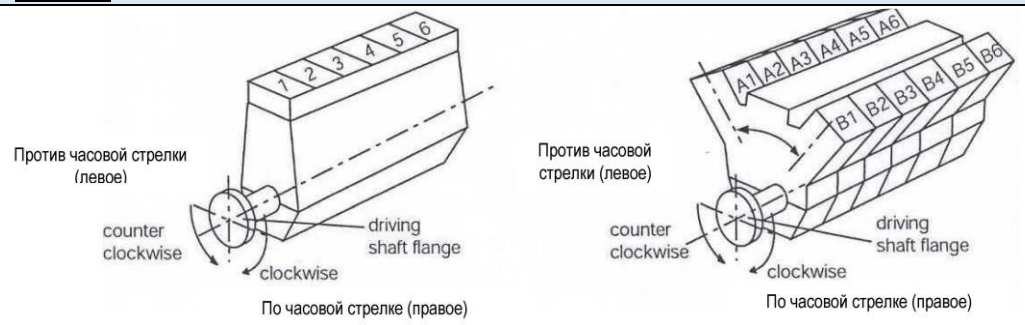

Порядок нумерации цилиндра слева направо, как указано выше на схемах (что применимо)
State numbering systemof cylinder from left to right as per above diagrams (as applicable)

Число цилиндров Number of cylinders	Исполнение вращения по частовой стрелке Clockwise firing order	Исполнение вращения против часовой стрелке Counter-clockwise firing order

4. Вспомогательные системы двигателя
Engine Ancillary Systems

4a. Турбонаддув Turbochargers	☐	Имеется Fitted	☐	Отсутствует Not Fitted
Смазка турбонагнетателя обеспечивается: Turbocharger oil supply by:	☐	Системой смазки ДВС Engine lub. oil system	☐	Автономной системой смазки NC internal lub oil system

Число цилиндров No. of cylinders	Число вспм. воздуходувок No. of aux. blowers	Число возд. охладителей No. of charge air collers	Число ТК No. of TC	Изготовитель ТК и тип TC manufacturer and type	СТО на ТК TC type approval TAC

4b. Ругулятор частоты вращения
Speed governor

Назначение ДВС (ГД/ВД/авар. привод) Engine application (Main/Aux/Emergency)	Изготовитель/тип Manufacturer/type	Режим работы Mode of operation	№ СТО на ДВС (если электрич./электронный регулятор ЧВ) Type approval (TAC) No.
	/		
	/		
	/		
	/		
	/		
	/		
	/		
	/		
	/		
	/		

4c. Защита по превышению максимальной частоты вращения Overspeed protection					
Независимая защита по превышению максимальнойчастоты вращения имеется Independent overspeed protection available		☐ Да Yes	☐ Нет No	Режим работы:_____ Mode of operation:	
Изготовитель/тип, если электронный: Manufacturer/type, if electronic:				№ СТО _____ Type approval certificate No.	
4d. Электронные системы Electronic systems					
Системы контроля и управления двигателя *Примечание: используйте раздел "Примечания" для случаев, когда иная система управления ДВС будет использоваться для типового испытания.* Engine control and management systems *Note: use "Remarks" section to identify when a different engine control system will be used for Type Test*					
Оборудование: Изготовитель и модель: Hardware: Manufacturer & Model:_____ Программное обеспечение: Название и версия: Software: Name & Version:		Свидетельство о типовом одобрении № _____ Type approval Certificate No. Свидетельство соответствия № _____ Software conformity certificate No.			
Дополнительная электронная система 1: Изготовитель и тип: _____ Additional electronic system 1: Manufacturer & type:		Функционирование системы: System function: Свидетельство о типовом одобрении № _____ Type approval Certificate No.			
Дополнительная электронная система 2: Изготовитель и тип: _____ Additional electronic system 2: Manufacturer & type:		Функционирование системы: _____ System function: Свидетельство о типовом одобрении № _____ Type approval Certificate No.			
Дополнительная электронная система 3: Изготовитель и тип: Additional electronic system 3: Manufacturer & type:		Функционирование системы: _____ System function: Свидетельство о типовом одобрении № _____ Type approval Certificate No.			
4e. Система пуска Starting system					
Тип: Type:					
4f. Устройства защиты / (функционирование Safety devices / functions					
Пламегаситель или предохранительное устройство установлены в системе пускового воздуха A flame arrestor or a bursting disk is installed in the starting air system		до каждого пускового клапана before each starting valve	☐ Да Yes	☐ Нет No	
Предохранительные клапаны картера имеются Crankcase relief valves available		☐ Да Yes	☐ Нет No	Изготовитель / тип: Manufacturer/type:	
Свидетельство о типовом одобрении № Type approval Certificate No.					
Номер цилиндра No. of cylinder	Общий объем картера ($м^3$) Total crankcase gross volume incl.attachments (m^3)	Тип и размер (мм) предохранительного клапана Type & size (mm) of relief valve	Площадь предохранительной части клапана ($мм^2$) Relief area per relief valve (mm)	Число предохранительных клапанов No. of relief valves	
Использованный метод для обнаружения потенциально взрывоопасные условия в картере ДВС: Method used for detection of potentially explosive crankcase condition:					
☐ Детектор масляного тумана: Изготовитель /тип: Oil mist detector: Manufacturer / type:			Свидетельство о типовом одобрении № Type approval Certificate No.		
☐ Альтернативный метод: *(отметить что применимо)* Alternative method: *(mark all that apply)*	☐ Контроль давления среды в картере Crankcase pressure monitoring	☐ Контроль температуры подшипников Bearing temperature monitoring	☐ Другое Other		
	☐ Контроль температуры разбрызгиваемого масла Oil splash temperature monitoring	☐ Устройства рециркуляции Recirculation arrangements			
Устройство сигнализации превышения давления в цилиндре имеется Cylinder overpressure warning device available	☐ Да Yes	Тип:____ Type:	Давление____ Pressure	(бар)____ (bar)	☐ Нет No

4g. Навешенное вспомогательное оборудование *(отметить что поименимо)* Attached ancillary equipment *(mark a/ı that apply)*			
Приводные насосы (навешанные) Engine driven pumps			
☐ Главный насос смазочного масла Main lubricating oil pump	☐ Насос морской охлаждающей воды Sea cooling water pump	☐ Насос пресной охлаждающей воды (низкой температуры) LT-fresh cooling water pump	☐ Другое Other
☐ Циркуляционный насос пресной охлаждающей воды (выс.темп) HT-fresh cooling water pump	☐ Топливный насос бустера Fuel oil booster pump	☐ Насос гидравлического масла Hydraulic oil pump	
Навешенные на ДВС насосы с собственным приводом Engine attached motor driven pumps			
☐ Лубрикаторный насос Lubricating oil pump	☐ Насос охлаждения пресной воды Cooling fresh water pump	☐ Топливный насос бустера Fuel oil booster pump	
☐ Насос гидравлического масла Hydraulic oil pump	☐ Другое Other		
Навешанные охладители или нагреватели Engine attached cooler or heater			
☐ Охладитель смазочного масла Lubricating oil cooler	☐ Подогреватель Lubricating oil heater	☐ Охладитель топливного клапана Fuel oil valve cooler	
☐ Охладитель масла гидравлики Hydraulic oil cooler	☐ Охладитель пресной воды охлаждения Cooling fresh water cooler		
Фильтр на ДВС: Engine attached filter:			
Фильтр смазочного масла Lubricating oil filter	☐ Одиночный Single	☐ Сдвоенный Duplex	☐ Автоматический Automatic
Фильтр топлива Fuel oil filter	☐ Одиночный Single	☐ Сдвоенный Duplex	☐ Автоматический Automatic

5. Предельные углы наклона *(работа ДВС гарантируется в следующих пределах)* Inclination limits *(engine operation is safeguarded under the following limits)*	Крен Athwartships Статический Static	Динамический Dynamic	Дифферент Fore-and-aft Статический Static	Динамический Dynamic
Главный и вспомогательный привод Main & Auxiliary machinery	☐ 15.0°	☐ 22.5°	☐ 5.0°	☐ 7.5°
Аварийный привод Emergency machinery	☐ 22.5°	☐ 22.5°	☐ 10.0°	☐ 10.0°
ДВС для аварийного привода на судах для перевозки сжиженного газа и жидких химикатов Emergency machinery on ships for the carriage of liquefied gas and liquid chemicals	☐ 30.0°	☐ 30.0°		

6. Работа главного двигателя в аварийном режиме Main engine emergency operation		
При выходе из строя одного вспомогательного нагнетателя, двигатель может быть запущен и работать при частичной нагрузке At failure of one auxiliary blower, engine can be started and operated at partial load	☐ Да Yes	☐ Нет No
При выходе из строя одного ГТН, работа двигателя может быть продолжена At failure of one turbocharger, engine operation can be continued	☐ Да Yes	☐ Нет No

7. Ссылки: *Дополнительная информация прилагаемая к Заявке* References: *Additional Information Attached to Application*	
Документ/ идентификация Document Name/Number	Краткое описание о содержащейся информации в документе Summary of information contained in document

8. Примечания Further Remarks

Примечания:

N o t e s :

* Все составляющие, которые влияют на окончательно собранный двигатель (например, производство, модификации, настойки) должны быть перечислены. Для всех мест, где такая работа проводится может потребоваться полная оценка производства (ОСП).

All parties that affect the final complete engine (e.g. manufacture, modify, adjust) are to be listed. All sites where such work is carried out may be required to complete CoP assessment.

† ОП = Оценка проекта, ТИ = Типовые испытания, ОСП = Оценка соответствия производства. См "Определения" в конце этой формы для получения дополнительной информации.

DA = Design Appraisal, TT = Type Test, CoP = Assessment Of Conformity of Production. See "Definitions" at the end of this application form for more information.

‡ Только в случае расширения типового одобрения.

Only in case of TA Extension.

§ См "Определения" в конце этой формы для получения дополнительной информации.

See "Definitions" at the end of this application form for more information.

Заполнено:
Completed By: _____

Подпись:
Signature: _____

Компания:
Company:

Должность:
Job Title:

Дата:
Date:

Печать:
Stamp:

Определения

Definitions:

Оценка проекта (ОП) – оценивание всех чертежей, расчетов и документов, относящихся к проекту (конструкции) в соответствии с техническими требованиями Регистра и МАКО, включая вспомогательное оборудование и системы, служащие для надежной работы двигателя в целом. Оценка проекта указывается в приложении к СТО.

Design Appraisal: Evaluation of all relevant plans, calculations and documents related to the design to determine compliance with the IACS and Register's technical requirements. This includes requirements for all associated ancillary equipment and systems essential for the safe operation of the engine i.e. the Complete Engine. The Design Appraisal is recorded on a Supplement to the Type Approval Certificate.

Типовые испытания – испытания, удовлетворяющие полному объему проверок окончательно собранного двигателя на соответствие требованиям одобренной Регистром Программы испытаний на основе, как минимум, требований Прилож.6 к разд.5 "Механизмы" настоящей части (УТ МАКО М71). Типовые испытания проводятся только для головного образца.

Серийные образцы подлежат заводским приемочным испытаниям и испытаниям на судне в соответствии УТ МАКО М51 (в соответствии с Прилож.7 к разд. 5 "Механизмы" настоящей части).

Type Testing requires satisfactory completion Of testing of the Complete Engine against the requirements of the Register's applicable engine Type Testing programme (according to the requirements of Annex 6 to Sec.5 "Machinery", of the Part of the Rules based on minimum requirements of IACS UR M71). Type testing is only applicable to the first in series. All engines are to complete factory acceptance and shipboard trials as defined by IACS UR M51 (in accordance with Annex 7 to Sec. 5 "Machinery" of the Part of the Rules).

Оценка конструкции для оформления Свидетельства – оценка выполняется на основе удовлетворительных результатов полного объема оценки проекта и типовых испытаний.

Design Evaluation Certification may be granted upon satisfactory completion of Design Appraisal and Type Testing.

Оценка соответствия производства (ОСП) – оценка обеспечения качества, средств производства, методов и средств испытаний для подтверждения способности изготовителя регулярно производить комплектные двигатели соответствующие одобренной и испытанной типовой конструкции.

Assessment of Conformity of Production means the assessment of quality assurance, manufacturing facilities and processes and testing facilities, to confirm the manufacturer's capability to repeatedly produce the complete engine in accordance with the approved and type tested design.

Оформление СТО – СТО выдается на основе удовлетворительных результатов полного объема оценки проекта, типовых испытаний и оценки производства полностью собранных двигателей. Свидетельство о типовом одобрении содержит результаты оценки проекта, типовых испытаний и оценку соответствия производства.

Type Approval Certification will be granted upon satisfactory completion of Design Appraisal, Type Testing and assessment of Conformity of Production of the complete engine. The Type Approval Certificate will incorporate outputs from the Design Appraisal, the Type Test and the Assessment of Conformity of Production.

Комплектный двигатель – двигатель с системой управления, всеми вспомогательными устройствами и системами в соответствии с требованиями правил, которые обеспечивают безопасную работу двигателя и на которые распространяются требования правил. Перечень таких компонентов может включать (но не ограничиваться):

Complete Engine includes the control system and all ancillary systems and equipment referred to in the Rules that are used for safe operation of the engine and for which there are rule requirements, this includes systems allowing the use Ofdifferent fuel types. The exact list of components/items that will need to be tested in together with the bare engine will depend on the specific design of the engine, its control system and the fuel(s) used but may include, but are not limited to, the following:

(a) Турбонагнетатель(и) / Turbocharger(s)

(b) Устройства предотвращения взрыва в картере /Crankcase explosion relief devices

(c) Устройства обнаружения и сигнализации масляного тумана в картере / Oil mist detection and alarm devices

(d) Трубопроводы / Piping

(e) Системы мониторинга технического состояния (техническое и программное обеспечение) / Electronic monitoring and control system(s) – software and hardware

(f) Системы управления подачей топлива (для двухтопливных ДВС) / Fuel management system (where dual fuel arrangements are fitted) (g) Навешанные насосы / Engine driven pumps (h) Навешанные фильтры / Engine mounted filters

Вид топлива: все виды топлива, для работы на которых спроектирован двигатель, должны быть указаны в заявке на одобрение, поскольку это может влиять на требования по оценке конструкции и объему типовых испытаний. Если двигатель работает в двухтопливном режиме, должно быть детализировано сочетание топлив. Например, природный газ + морское дистиллятное топливо, природный газ + мазут (конкретные данные каждого вида топлива указываются в соответствующих позициях раздела 3а "Вид топлива".

Fuel Types: All fuels that the engine is designed to operate with are to be identified on the application form as this may have impact on the requirements that are applicable for Design Appraisal and the scope of the tests required for Type Testing. Where the engine is to operate in a Dual Fuel mode, the combinations of fuel types are to be detailed. E.g. Natural Gas + DMA, Natural Gas + Marine Residual Fuel, the specific details of each fuel are to be provided as indicated in the relevant rows of the Fuel Types part of section 3a of this form.

APPENDIX 4

TABULAR LISTING OF LICENSOR'S AND LICENSEE'S ICE DRAWING AND DATA

Licensee: _____ Licensee:_____

Licensee Engine No.: _____ Engine type: _____

№	Components or System	Licensor			Licensee		Has Design been modified by Licensee?		If Yes, indicate following information	
		Docs No. And Title	Rev. No.	Date of the RS Approval or Review	Docs. No.	Rev. No.	Yes	No	Identification of Alternative approved by Licensor (Refer to Appendix 5)	Date of the Register Approval or Review of Licensee
1										
2										
…										
n										

I attest the above information to be correct and accurate.

Person in Charge (Licensee):

Printed Name: _____ Signature:_____

Date: _____

APPENDIX 5

SAMPLE TEMPLATE FOR CONFIRMATION OF THE LICENSOR'S ACCEPTANCE OF LICENSEE'S ICE MODIFICATIONS

ICE Licensee Proposed Alternative to Licensor's Design			
Licensee information			
Licensee:		Ref No.:	
Description:		Info No.:	
Engine type:			
Engine No.:		Plant Id.:	

Design Spec:	General ☐	Specific Nos: ☐	
Licensor design:	State relevant part or drawing. numbers. Insert drawing clips or pictures. Add any relevant information		Licensee Proposed Alternative
		For example: Differences in geometry Differences in the functionality Material Hardness Surface condition Alternative standard Licensee production information introduced on the drawing Weldings or castings	
Reason: ☐ Licensee's production ☐ Sub-supplier's production ☐ Cosr down ☐ Tools	Interchangeability with licencor design ☐ yes ☐ no	Non-conformity Report, (NCR) or Research, Assessment, Evaluation (RAE) ☐ NOR ☐ RAE	Certified by licensor Initials: Date:
Licensor comments			
(RAE) ☐ Accepted as alternative execution(Licensee undertakes responsibility) ☐ No objection ☐ Not acceptable (Licensee undertakes responsibility		**(NSR)** ☐ Approved ☐ Conditionally approved ☐ Rejected	Certified by licensor Initials: Date:
Licensee ref.:			Date:
Licensee ref.:			Date:

APPENDIX 6

TYPE TESTING APPROVAL OF INTERNAL COMBUSTION ENGINES (ICE) AND RECOMMENDED CONTENT OF TYPE APPROVAL CERTIFICATE (CTO)

1. GENERAL.

1.1 Type approval of ICE consists of drawing approval, specification approval, conformity of production, approval of type testing programme, type testing of engines, review of the obtained results, and the issuance of the Type Approval Certificate. The maximum period of validity of a Type Approval Certificate is 5 years, but not more than the validity period of the documents approval. The requirements for drawing approval and specification approval of ICE are specified in appendices 2 to 5.

1.2 For the purpose of the present requirements the following definitions for ICE depending on the speed (also refer to 2.3.4.8, Part IX "Machinery" of the Rules for the Classification and Construction of Sea-Going Ships):

Low-Speed Engines mean diesel engines having a rated speed of less than 300 rpm;

Medium-Speed Engines mean diesel engines having a rated speed of 300 rpm and above, but less than 1400 rpm;

High-Speed Engines mean diesel engines having a rated speed of 1400 rpm or above.

Note. For Gas Engines the definitions specified in 9.2, Part IX "Machinery" of the Rules for the Classification and Construction of Sea-Going Ships, shall be applied.

2. OBJECTIVES.

2.1 The type testing shall be arranged to represent typical foreseen service load profiles, as specified by the ICE builder, as well as to cover for required margins due to fatigue scatter and reasonably foreseen inservice deterioration.

2.2 The objective specified in 2.1 principally apply to

Parts subjected to high cycle fatigue (HCF) such as connecting rods, cams, rollers and spring tuned dampers where higher stresses may be provided by means of elevated injection pressure, cylinder maximum pressure, etc.;

Parts subjected to low cycle fatigue (LCF) such as "hot" parts when load profiles such as idle – full load – idle (with steep ramps) are frequently used;

Operation of the engine at limits as defined by its specified alarm system, such as running at maximum permissible power with the lowest permissible oil pressure and/or highest permissible oil inlet temperature.

3. VALIDITY.

3.1 Type testing is required for every new engine type intended for installation onboard ships subject to classification.

3.2 A type test carried out for a particular type of engine at any place of manufacture shall be accepted for all engines of the same type built by licensees or the licensors, subject to each place of the ICE type manufacture being found to be acceptable to the Register.

3.3 A type of ICE is defined by:

bore and stroke;

injection method (direct or indirect);

valve and injection operation (by cams or electronically controlled);

kind of fuel (liquid, gaseous, dual-fuel ICE);

working cycle (4-stroke, 2-stroke);

turbo-charging system (pulsating or constant pressure);

the charging air cooling system (e.g. with or without intercooler);

cylinder arrangement (in-line or V)[1];

cylinder power, speed and cylinder pressures[2].

gas admission method (direct cylinder injection, charge air space or pre-mixed) for gas engine;

gas supply valve operation (mechanical or electronically controlled) for gas engine; ignition system (pilot injection, spark ignition, glow plug or gas self-ignition) for gas engine; ignition system (mechanical or electronically controlled).

Provided documentary evidence of successful service experience with the classified rating of 100 % is submitted, an increase (if design approved[3]) may be permitted without a new type test if the increase from the type tested engine is within:

5 % of the maximum combustion pressure, or

5 % of the mean effective pressure, or

5 % of the rpm.

Providing maximum power is not increased by more than 10 %, an increase of maximum approved power may be permitted without a new type test provided engineering analysis and evidence of successful service experience in similar field applications (even if the application is not classified) or documentation of internal testing are submitted if the increase from the type tested engine is within:

10 % of the maximum combustion pressure, or

10 % of the mean effective pressure, or

10 % of the rpm.

3.4 De-rated engine.

If an engine has been design approved, and internal testing per Stage A is documented (refer to 5.1) to a rating higher than the one type tested, the Type Approval may be extended to the increased power/mep/ rpm upon submission of an Extended Delivery Test Report (refer to Fig. 8.5 Load points) at:

test at over speed (only if nominal speed has increased);

rated power, i.e. 100 per cent output at 100 per cent torque and 100 per cent speed corresponding to load point **1**, 2 measurements with one running hour in between;

maximum permissible torque (normally 110 per cent) at 100 per cent speed corresponding to load point **3** or maximum permissible power (normally 110 per cent) and speed according to nominal propeller curve corresponding to load point **3a**, ½ hour;

100 per cent power at maximum permissible speed corresponding to load point **2**, ½ hour.

3.5 For electronically controlled diesel engines integration tests shall verify that the response of the complete mechanical, hydraulic and electronic system is as predicted maybe

---

[1] One type test shall be considered adequate for the one-type ICE to cover a range of different numbers of cylinders. However, a type test of an in-line ICE may not always cover the V-version. Separate type tests may be required for the V-version. On the other hand, a type test of a V- engine covers the in-line engines, unless the bmep is higher.
Items such as axial crankshaft vibration, torsional vibration in camshaft drives, and crankshafts, etc. may vary considerably with the number of cylinders and may influence the choice of engine to be selected for type testing.

[2] The engine is type approved up to the tested ratings and pressures (100 per cent corresponding to MCR).

[3] Only crankshaft calculation and crankshaft drawings, if modified.

for intended operational modes approved at the works. If such tests are practically unfeasible at the works, however, these tests may be carried out during sea trials of the ship. The scope of these tests shall be agreed with the Register for selected cases based on the failure mode and effects analysis required in 1.2.3.1, Part IX "Machinery" of the Rules for the Classification and Construction of Sea-Going Ships.

4. SAFETY PRECAUTIONS.

4.1 Before any test run is carried out, all relevant equipment for the safety of attending personnel shall be made available by the manufacturer/shipyard and shall be operational, and its correct functioning shall be verified.

4.2 This applies especially to crankcase explosive conditions protection, but also over-speed protection and any other shut down function.

4.3 The inspection for jacketing of high-pressure fuel oil lines and proper screening of pipe connections shall also be carried out before the test runs.

4.4 Interlock test of turning gear shall be performed when installed.

4.5 Measures to verify that Gas fuel piping on engine is gas tight shall be carried out prior to start-up of the engine.

5. TEST PROGRAMME.

5.1 The type testing is divided into 3 stages:

.1 Stage A – internal (manufacturer's) tests.

This includes some of the testing made during the ICE development, function testing, and collection of measured parameters and records of testing hours. The results of testing required by the Register or stipulated by the designer shall be presented to the Register before starting stage B;

.2 Stage B – witnessed tests. This is the testing made in the presence of the Register Surveyor;

.3 Stage C – component inspection. This is the inspection of engine parts to the extent as required by the Register.

5.2 The complete type testing program is subject to approval by the Register. The extent the Register Surveyor's attendance shall be agreed in each case, but at least during stage B and C.

5.3 Testing prior to the witnessed type testing (Stage B and C, in the presence of the Register Surveyor), is also considered as a part of the complete type testing program.

5.4 Upon completion of complete type testing (Stage A through C), a type test report shall be submitted to the Register for review. The type test report shall contain:

overall description of tests performed during Stage A. Records shall be kept by the builders QA management for presentation to the Register;

detailed description of the load and functional tests conducted during Stage B;

inspection results from Stage C.

5.5 As required in Section 2 the type testing shall be substantiate the capability of the design and its suitability for the intended operation. Special testing such as LCF and endurance testing shall normally be conducted during Stage A.

5.6 High speed engines for marine use shall normally be subjected to an endurance test of 100 hours at full load. Omission or simplification of the type test may be considered for the type approval of engines with long service experience from non-marine fields or for the extension of type approval of engines of a well-known type, in excess of the limits given in Section 3.

Propulsion ICE for high speed craft that may be used for frequent load changes from idle to full shall normally be tested with at least 500 cycles (idle – full load – idle) using the steepest load ramp that the control system (or operation manual if not automatically controlled) permits. The duration at each end shall be sufficient for reaching stable temperatures of the hot parts.

For Dual Fuel (DF) engines, the load tests referred to in 7.2 and 8.4 shall be carried out in gas mode at the different percentages of the maximum power available in gas mode (refer to 9.13, Part IX "Machinery" of the Rules for the Classification and Construction of Sea- Going Ships).

The 110 % load tests are not required in the gas mode.

The influence of the methane number and LHV of the fuel gas is not required to be verified during the Stage **B** type tests. It shall however be justified by the engine designer through internal tests or calculations and documented in the type approval test report.

6. MEASUREMENTS AND RECORDINGS.

6.1 During all testing the ambient conditions (air temperature, air pressure and humidity) shall be recorded.

6.2 As a minimum, the following engine data shall be measured and recorded:

engine r.p.m;

torque;

maximum combustion pressure for each cylinder[1];

mean indicated pressure for each cylinder[1];

charging air pressure and temperature;

exhaust gas temperature;

fuel rack position or similar parameter related to engine load;

turbocharger speed;

all engine parameters that are required for control and monitoring for the intended use (propulsion, auxiliary, emergency);

each fuel index for gas and diesel as applicable (or equivalent reading) for gas engines;

gas pressure and temperature at the inlet of the gas manifold for gas engines;

gas concentration in the crankcase for gas engines.

Calibration records for the instrumentation used to collect data as listed above are to be presented to – and reviewed by the attending Surveyor.

Additional measurements may be required in connection with the design assessment.

7. STAGE A. INTERNAL (MANUFACTURER'S) TESTS.

7.1 During the internal tests, the engine shall be operated at the load points important for the engine designer and the pertaining operating values shall be recorded. The load conditions to be tested shall also include the testing specified in the applicable type approval programme.

7.2 At least the following conditions shall be tested:

Normal case. The load points 25 per cent, 50 per cent, 75 per cent, 100 per cent and 110 per cent of the maximum rated power for continuous operation, to be made along the normal (theoretical) propeller curve and at constant speed for propulsion engines (if applicable

[1] For engines where the standard production cylinder heads are not designed for such measurements, a special cylinder head made for this purpose may be used. In such a case, the measurements may be carried out as part of Stage A and shall be properly documented. Where deemed necessary e.g. for dual fuel engines, the measurement of maximum combustion pressure and mean indicated pressure may be carried out by indirect means, provided the reliability of the method is documented.

mode of operation i.e. driving controllable pitch propellers), and at constant speed for engines intended for generator sets including a test at no load and rated speed;

the limit points of the permissible operating range. These limit points shall be defined by the engine manufacturer;

for high speed ICE, the 100 hour full load test and the low cycle fatigue test apply as required in connection with the design assessment;

specific tests of parts of the engine, required by the Register or stipulated by the designer.

7.3 Dual Fuel (DF) engines shall be tested taking in account their structural features in compliance with 7.2 in both gas and diesel modes (with and without pilot injection in service) as found applicable for the engine type.

For Dual Fuel (DF) engines with variable liquid/gas ratio, the load tests shall be carried out at different ratios between the minimum and the maximum allowable values.

For Dual Fuel (DF) engines, switch over between gas and diesel modes shall be tested at different loads.

8. STAGE B. THE TESTING MADE IN THE PRESENCE OF THE REGISTER SURVEYOR.

8.1 The tests listed below shall be carried out in the presence of a Register Surveyor. The achieved results shall be recorded and signed by the attending Surveyor after the type test is completed.

8.2 The over-speed test shall be carried out and shallo demonstrate that the engine is not damaged by an actual engine overspeed within the overspeed shutdown system set-point.

8.3 Load points.

The engine shall be operated according to the power and speed diagram (refer to Fig. 8.5). The data shall be measured and recorded when testing the engine at the various load points have to include all engine parameters listed in Section 6. The operating time per load point depends on the engine size (achievement of steady state condition) and on the time for collection of the operating values. Normally, an operating time of 0,5 hour can be assumed per load point, however sufficient time shall be allowed for visual monitoring by the Surveyor.

8.4 The load points (refer to Fig. 8.5) are:

rated power (MCR), i.e. 100 per cent output at 100 per cent torque and 100 per cent speed correspondding to load point **1**, normally for 2 hours with data collection with an interval of 1 hour. If operation of the engine at limits as defined by its specified alarm system (e.g. at alarm levels of lub oil pressure and inlet temperature) is required, the test shall be made here;

100 per cent power at maximum permissible speed corresponding to load point **2**;

maximum permissible torque (at least and normally 110 per cent) at 100 per cent speed corresponding to load at point **3**, or maximum permissible power (at least and normally 110 per cent) and 103,2 per cent speed according to the nominal propeller curve corresponding to load point **3a**. Load point **3a** applies to engines only driving fixed pitch propellers or water jets. Load point **3** applies to all other purposes;

part loads e.g. 75 per cent, 50 per cent and 25 per cent of rated power and speed according to nominal propeller curve (i.e. 90,8 per cent, 79,3 per cent and 62,9 per cent speed) corresponding to points **6**, **7** and **8** or at constant rated speed setting corresponding to points **9**, **10** and **11**, depending on the intended application of the engine;

crosshead engines not restricted for use with C.P. propellers shall be tested with no load at the associated maximum permissible engine speed.

Dual Fuel (DF) engines shall be tested in both gas and diesel modes that apply for the engine type as defined by the engine designer (refer to 5.6). This also applies to the overspeed test;

in case of Dual Fuel (DF) engines with variable liquid / gas ratio, the load tests shall be carried out at different ratios between the minimum and the maximum allowable values.

8.5 During all these load points, engine parameters shall be within the specified and approved values.

8.6 Operation with damaged turbocharger.

For 2-stroke propulsion engines intended for operation being part of a propulsion plant the achievable continuous power shall be determined in the case of turbocharger damage.

Engines intended for single propulsion with a fixed pitch propeller shall be able to run continuously at a speed (r.p.m.) of 40 % of full speed along the theoretical propeller curve when one turbocharger is out of operation. The test can be performed by either by-passing the turbocharger, fixing the turbocharger rotor shaft or removing the rotor.

8.7 Functional tests:

verification of the lowest specified propulsion engine speed according to the nominal propeller curve as specified by the engine designer (even though it works on a water-brake);

starting tests, for non-reversible engines and/or starting and reversing tests, for reversible engines, for the purpose of determining the minimum air pressure and the consumption for a start;

for Dual Fuel (DF) engines, the lowest specified speed shall be verified in diesel mode and gas mode;

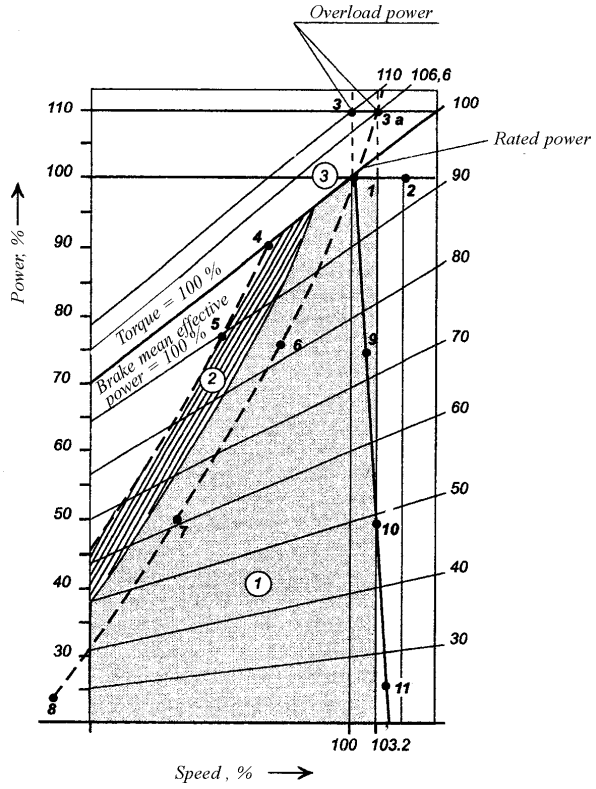

Fig.8.5
Load points
1 – range of continuos operation;
2 – range of intermitted operation;
3 – range of short-time overload operation

for Dual Fuel (DF) engines, switch over between gas and diesel modes shall be tested at different loads;

the efficiency of the ventilation arrangement of the double walled gas piping system shall be verified;

simulation of a gas leakage in way of a cylinder gas supply valve;

governor tests (refer to 2.11, Part IX "Machinery" of the Rules for the Classification and Construction of Sea-Going Ships) be carried out. Thus, Gas engines driving generators shall be additionally tested in compliance with 2.11.3.2, Part IX "Machinery" of the Rules for the Classification and Construction of Sea Going Ships considering the requirements of 2.11.3.5 – 2.11.3.6, Part IX "Machinery" of the Rules for the Classification and Construction of Sea-Going Ships, and that for Dual Fuel (DF) engines when being tested, the transition from gas to liquid is permissible. For Gas Fuel (GF) engines, the influences of Lower Heating Value (LHV), methane number and ambient conditions on the dynamic load response test results shall be theoretically determined and specified in the test report. Referring to the limitations as specified in 9.12.1.2, Part IX "Machinery" of the Rules for the Classification and Construction of Sea-Going Ships, the margin for satisfying dynamic load response shall be determined.

8.8 Integration test.

For electronically controlled diesel engines, integration tests shall verify that the response of the complete mechanical, hydraulic and electronic system shall be as predicted for all intended operational modes. The scope of these tests shall be agreed with the Register for selected cases based on the FMEA required in 1.2.3.1, Part IX "Machinery" of the Rules for the Classification and Construction of Sea-Going Ships.

Thus, for gas engines the tests shall at least include the following incidents:

failure of ignition (spark ignition or pilot injection systems), both for one cylinder unit and common system failure;

failure of a cylinder gas supply valve;

failure of the combustion (to be detected by e.g. misfiring, knocking, exhaust temperature deviation, etc.);

abnormal gas pressure;

abnormal gas temperature (this test may be carried out using a simulation signal of the temperature).

8.9 Fire protection measures.

Verification of compliance with requirements for jacketing of high-pressure fuel oil lines, screening of pipe connections in piping containing flammable liquids and insulation of hot surfaces (> 220 °C):

the engine shall be inspected for jacketing of high-pressure fuel oil lines, including the system for the detection of leakage, and proper screening of pipe connections in piping containing flammable liquids;

proper insulation of hot surfaces shall be verified while running the engine at 100 per cent load, alternatively at the overload approved for intermittent use. Readings of surface temperatures shall be done by use of infrared thermoscanning equipment. Equivalent measurement equipment may be used when so approved by the Register. Readings obtained shall be randomly verified by use of contact thermometers.

9. STAGE C. SURVEY OF THE ICE COMPONENTS WITHIN THE SCOPE REQUIRED BY THE REGISTER.

9.1 The crankshaft deflections shall be measured in the specified (by designer) condition (except for engines where no specification exists).

9.2 High speed engines for marine use shall normally be stripped down for a complete survey after the type test.

9.3 For all the other engines, after the test run the components of one cylinder for in-line ICE and two cylinders for V-engines shall be presented for inspection as follows (ICE with long service experience from non-marine fields can have a reduced extent of opening):

piston removed and dismantled;

crosshead bearing dismantled;

guide planes;

connecting rod bearings (big and small end) dismantled (special attention to serrations and fretting on contact surfaces with the bearing backsides);

main bearing dismantled;

cylinder liner in the installed condition;

cylinder head, valves disassembled;

cam drive gear or chain, camshaft and crankcase with opened covers. (The engine must be turnable by turning gear for this inspection);

gas supply valve including pre-chamber as found applicable;

pilot fuel injection valve (for DF engines);

spark igniter (for GF engines).

9.4 For V-engines, the cylinder units shall be selected from both cylinder banks and different crank throws.

9.5 If deemed necessary by the surveyor, further dismantling of the engine may be required.

10. THE RECOMMENDED DATA TO BE SPECIFIED IN "CTO" FOR ICE.

The data and information shown in Table 10 below is recommended to be indicated in "CTO" for ICE. In addition the Section "ICE data" shall not indicate the data attributed to confidential information by the manufacturer, for example, the maximum combustion pressure. In this case the appropriate note shall be made in CTO "not specified at a manufacturer's request", but such confidential information shall be given in the documents submitted to the Register review for type approval.

Table 10

RECOMMENDED CONTENT CONTENT OF TYPE APPROVAL CERTIFICATE (CTO)
(supplements Form CTO 6.8.3-1)
Свидетельство о типовом одобрении ДВС
Type Approval Certificate of Internal Combustion Engine

Настоящим подтверждается, что ниже упомянутые ДВС, Изготовитель / Лицензиат и место изготовления получили одобрение в соответствии с применимыми требованиями Процедуры типового одобрения Регистра.

This is to certify that the undernoted Internal Combustion Engine, Builders/Licensees and Places of Production have been approved in accordance with the relevant requirements of the RS' Type Approval Procedure.

Описание Свидетельства / Certificate Description

Номер СТО Certificate Number	:	Дата первоначального одобрения Initial Approval date	:
		Номер одобрения Approval number	:
Проектант ДВС Engine Designer	:		

Данные ДВС / Engine Particulars

Тип ДВС Engine Type	
Назначение Application	☐ Главный Propulsion ☐ Одномашинная установка Single engine ☐ Многомашинная установка Multi-engine installation ☐ Вспомогательный Auxiliary ☐ Аварийный Emergency
Количество цилиндров Number of Cylinders	
Расположение цилиндров Cylinder arrangement	☐ Рядный / In-line ☐ V-образный / Vee (Угол развала / V-angle .....°) ☐ Другое Other (указать)
Диаметр цилиндра, мм Cylinder Bore (mm)	:
Ход поршня, мм Stroke (mm)	:
Расчетная мощность (кВт/цил) Rated Power (kW/cyl.)	:
Расчетная частота вращения (об/мин) Rated Speed (1/min.)	:
Mean Indicated Pressure (bar, MPa, etc.) Ср. индикаторное давление (МПа)	:
Ср. эффективное давление (МПа) Mean Effective Pressure (MPa)	:
Макс. давление сгорания (МПа) Max Firing Pressure (MPa)	:
Впрыск топлива Fuel injection	Непосредственный Direct С форкамерой Indirect Механическое управление впрыском Cam controlled injection Электронное управление впрыском Electronically controlled injection
Система впрыска Injection System	☐ Насос+трубки+фосунки Pump+Pipe+Injector ☐ Коммон-рэйл / Common rail ☐ Другое/Other (указать)
Управление клапанами Valve operation	☐ Механическое/ Cam control ☐ Электронное / Electronic
Вид топлива Kind of fuel	☐ Жидкое / Liquid ☐ Двухтопливный/ Dual-fuel ☐ Газ / Gaseous
Тактность Working cycle	☐ 4-тактный / 4-stroke ☐ 2-тактный / 2-stroke
Система наддува Turbocharging system	☐ Импульсная Pulsating ☐ При постоянном давлении Constant pressure ☐ Без наддува None ☐ Одноступенчатая Single-stage ☐ Двухступенчатая Two stage
Система охлаждения наддувочного воздуха Charge air cooling system	☐ С промежуточным охлаждением / With intercooler ☐ Без промежуточного охлаждения / Without intercooler
Другие особенности Miscellaneous features	

Свидетельство действительно до [дата] / This Certificate is valid until [Date]
Место выдачи [ ] Дата выдачи [ ]Issued at [ ] on [Date].

Подпись / Signature

[Печать / Stamp]

Инспектор
ФИО, должность / Name, Position

Должностное лицо
ФИО, должность / Name, Position

Условия одобрения (ограничения) / Approval condition (service restriction)
Применимые Правила и Нормативные документы / Rules, Standards
Перечень признанных изготовителей / Лицензиатов и мест производства
List of Class approved Builders/Licensees and Places of Production
Дополнительная информация / Additional Information

Примечание. Дополнительно могут быть указаны данные по вспомогательным устройствам, установленным на ДВС, таких как турбонагнетатели, предохранительные клапаны картера, система управления, программное обеспечение.

Note. Details of the integrated ancillaries, such as turbochargers, crankcase explosion relief valves, controller hardware and software, etc., may be included.

Перечень приложений / List of Appendices

(По запросу Регистра, например сведения об одобрении документации, данных типовых испытаний, специальном оборудовании и др.)

(At the request of Register, e.g. Type Approval Documentation, TAT details, Specific Equipment, etc.)

Приложение A / Appendix A
Приложение B / Appendix B
.....
и т.д. / etc.

APPENDIX 7

BENCH TESTS (FACTORY ACCEPTANCE TESTS (FAT)) AND ICE TESTS AFTER INSTALLATION ONBOARD

1. SAFETY PRECAUTIONS.

1.1 Before any test run is carried out, all relevant equipment for the safety of attending personnel shall be made available by the manufacturer/shipyard and be operational.

1.2 This applies especially to crankcase explosive conditions protection, but also to over-speed protection and any other shut down function.

1.3 The overspeed protective device is to be set to a value, which is not higher than the overspeed value that was demonstrated during the type test for that engine. This set point shall be verified by the RS Surveyor.

1.4 Measures to verify that gas fuel piping on engine is gas tight shall be carried out prior to start-up of the engine.

2. GENERAL.

2.1 Before any official testing, the engines shall be run-in as prescribed by the engine manufacturer.

2.2. The bench equipment shall be in compliance with 3.3. All fluids used for testing purposes such as fuel, lubrication oil and cooling water shall be suitable for the purpose intended, e.g. they are to be clean, preheated if necessary and cause no harm to engine parts. This applies to all fluids used temporarily or repeatedly for testing purposes only.

2.3 The requirements for mooring and sea trials are specified in Section 4.

2.4 Engines shall be inspected for:

jacketing of high-pressure fuel oil lines including the system used for the detection of leakage;

screening of pipe connections in piping containing flammable liquids;

insulation of hot surfaces by taking random temperature readings that are to be compared with corresponding readings obtained during the type test. This shall be done while running at the rated power of engine. Use of contact thermometers may be accepted at the discretion of the attending Surveyor. If the insulation is modified subsequently to the type approval test, the Register may request temperature measurements in compliance with 8.9 of Appendix 6, Section 5, Part IV "Technical Supervision during Manufacture Of Products".

2.5 Bench tests (factory acceptance tests) shall normally be carried out during the bench tests by the manufacturer and the attending surveyor, in the scope of Section 3. But at the discretion of the Register parts of these tests may be postponed to the mooring and sea trials after installation onboard (refer to Section 4).

3. BENCH TESTS.

3.1 Objectives.

The purpose of the bench trials shall be to verify design premises such as power, safety against fire, adherence to approved limits (e.g. maximum pressure), and functionality and to establish reference values or base lines for later reference in the operational phase.

3.2 Records.

3.2.1 The following environmental test conditions shall be recorded:
ambient air temperature;
ambient air pressure;
atmospheric humidity.

3.2.2 For each required load point, the following parameters are normally to be recorded:
power and speed;
fuel index (or equivalent reading);
maximum combustion pressures (only when the cylinder heads installed are designed for such measurement);
exhaust gas temperature before turbine and from each cylinder (to the extent that monitoring is required in Appendix 9 and Chapter 4.2, Part V "Automatization" of the Rules for Classification and Construction of Sea-Going Ships);
charge air temperature;
charge air pressure;
turbocharger speed (to the extent that monitoring is required in Appendix 9);
fuel index, both gas and diesel as applicable (or equivalent reading);
gas pressure and temperature.

3.2.3 Calibration records for the instrumentation shall, upon request, be presented to the attending Surveyor.

3.2.4 For all stages at which the engine shall be tested, the pertaining operational values shall be measured and recorded by the engine manufacturer. All results shall be compiled in an acceptance protocol to be issued by the engine manufacturer. This also includes crankshaft deflections if considered necessary by the engine designer.

3.2.5 In each case, all measurements conducted at the various load points shall be carried out at steady state operating conditions. However, for all load points provision shall be made for time needed by the surveyor to carry out visual examination. The readings for MCR, i.e. 100 per cent power (rated maximum continuous power at corresponding rpm) shall be taken at least twice at an interval of normally 30 min.

3.3 Test loads.

3.3.1 Test loads for various engine applications are given below. In addition, the scope of the trials may be expanded depending on the engine application, service experience, or other relevant reasons.

DF engines shall be tested in both diesel and gas mode as found applicable. Thus, for DF engines, the load tests referred to in 3.3.2 – 3.3.6 shall be carried out in gas mode at the different percentages of the maximum power available in gas mode (refer to 9.12, Part IX "Machinery" of the Rules for the Classification and Construction of Sea-Going Ships).

The 110 % load test is not required in the gas mode.

N o t e . Alternatives to the detailed tests may be agreed between the manufacturer and the Register when the overall scope of tests is found to be equivalent the requirements of 3.3.

3.3.2 Propulsion engines driving propeller or impeller only.

.1 100 per cent power (MCR) at corresponding speed n_r: at least 60 min.;

.2 110 per cent power at engine speed 1,032n_r: records to be taken after 15 min. or after steady conditions have been reached, whichever is shorter (only required once for each different engine/ turbocharger configuration);

.3 approved intermittent overload (if applicable): testing for duration as agreed with the manufacturer;

.4 90 per cent (or normal continuous cruise power), 75 per cent, 50 per cent and 25 per cent power in accordance with the nominal propeller curve, the sequence to be selected by the engine manufacturer;

.5 reversing manoeuvres (if applicable).).

N o t e . After running on the bench tests, the fuel delivery system shall be so adjusted that overload power cannot be given in service, unless intermittent overload power is approved, the fuel delivery system shall be blocked to that power.

3.3.3 Engines driving generators for electric propulsion.

.1 100 per cent power (MCR) at corresponding speed n_r: at least 60 min;

.2 110 per cent power at engine speed n_r: 15 min – after having reached steady conditions;

.3 governor tests shall be carried out;

.4 75 per cent, 50 per cent and 25 per cent power and idle, the sequence shall be selected by the engine manufacturer.

N o t e . After running on the test bed, the fuel delivery system is to be adjusted so that full power plus a 10 per cent margin for transient regulation can be given in service after installation onboard. The transient overload capability is required so that the required transient governing characteristics are achieved also at 100 per cent loading of the engine, and also so that the protection system utilised in the electric distribution system can be activated before the engine stalls.

3.3.4 Engines driving generators for auxiliary purposes.

Tests shall be performed as in 3.3.3.

3.3.5 Propulsion engines also driving power take off (PTO) generator.

.1 100 per cent power (MCR) at corresponding speed n_r: at least 60 min;

.2 110 per cent power at engine speed n_r: 15 min – after having reached steady conditions;

.3 approved intermittent overload (if applicable): testing for duration as agreed with the manufacturer;

.4 90 per cent (or normal continuous cruise power), 75 per cent, 50 per cent and 25 per cent power in accordance with the nominal propeller curve or at constant speed, the sequence to be selected by the engine manufacturer.

N o t e . After running on the test bed, the fuel delivery system shall be adjusted so that full power plus a margin for transient regulation can be given in service after installation onboard. The transient overload capability is required so that the electrical protection of downstream system components is activated before the engine stalls. This margin may be 10 per cent of the engine power but at least 10 per cent of the PTO power

3.3.6 Engines driving auxiliaries.

.1 100 per cent power (MCR) at corresponding speed n_r: at least 30 min;

.2 110 per cent power at engine speed n_r: 15 min – after having reached steady conditions;

.3 approved intermittent overload (if applicable): testing for duration as agreed with the manufacturer;

.4 for variable speed engines, 75 per cent, 50 per cent and 25 per cent power in accordance with the nominal power consumption curve, the sequence shall be selected by the engine manufacturer.

N o t e . After running on the test bed, the fuel delivery system shall normally be so adjusted that overload power cannot be delivered in service, unless intermittent overload power is approved. In that case, the fuel delivery system shall be blocked to that power.

3.4 Turbocharger matching with engine

3.4.1 Compressor chart.

Turbochargers shall have a compressor characteristic that allows the engine, for which it is intended, to operate without surging during all operating conditions and also after extended periods in operation.

For abnormal, but permissible, operation conditions, such as misfiring and sudden load reduction, no continuous surging shall occur.

In this chapter, surging and continuous surging are defined as follows:

S u r g i n g means the phenomenon, which results in a high pitch vibration of an audible level or explosion-like noise from the scavenger area of the engine;

C o n t i n u o u s s u r g i n g means that surging happens repeatedly and not only once.

3.4.2 Surge margin verification.

3.4.2.1 Category C turbochargers used on propulsion engines shall be checked for surge margins during the engine workshop testing as specified below. These tests may be waived if successfully tested earlier on an identical configuration of engine and turbocharger (including same nozzle rings).

3.4.2.2 4-stroke engines.

The following shall be performed without indication of surging:

with maximum continuous power and speed (100 per cent), the speed shall be reduced with constant torque (fuel index) down to 90 per cent power;

with 50 per cent power at 80 per cent speed (propeller characteristic for fixed pitch), the speed shall be reduced to 72 per cent while keeping constant torque (fuel index).

3.4.2.3 2-stroke engines.

The surge margin shall be demonstrated by at least one of the following methods:

.1 the engine working characteristic established at workshop testing of the engine shall be plotted into the compressor chart of the turbocharger (established in a test bench). There shall be at least 10 per cent surge margin in the full load range, i.e. working flow shall be 10 per cent above the theoretical (mass) flow at surge limit (at no pressure fluctuations);

.2 sudden fuel cut-off to at least one cylinder shall not result in continuous surging and the turbocharger shall be stabilised at the new load within 20 s. For applications with more than one turbocharger the fuel shall be cut-off to the cylinders closest upstream to each turbocharger.

This test shall be performed at two different engine loads:

the maximum power permitted for one cylinder misfiring;

the engine load corresponding to a charge air pressure of about 0,6 bar (but without auxiliary blowers running);

.3 no continuous surging and the turbocharger shall be stabilised at the new load within 20 s when the power is abruptly reduced from 100 per cent to 50 per cent of the maximum continuous power.

3.5 Integration tests.

For electronically controlled engines, integration tests shall be made to verify that the response of the complete mechanical, hydraulic and electronic system is as predicted for all intended operational modes and the tests considered as a system shall be carried out at the works. If such tests are technically unfeasible at the works, however, these tests may be conducted during sea trial. The scope of these tests shall be agreed with the Register for selected cases based on the FMEA required in 1.2.3.1. Part IX "Machinery" of the Rules for the Classification and Construction of Sea-Going Ships.

Thus, for gas engines the tests shall at least include the following incidents (the failures shall be checked using simulation or other alternative methods agreed with the Register):

failure of ignition (spark ignition or pilot injection systems), for one cylinder unit;

failure of a cylinder gas supply valve;

failure of the combustion (to be detected by e.g. misfiring, knocking, exhaust temperature deviation, etc.);

abnormal gas pressure;

abnormal gas temperature.

3.6 Component inspections.

Random checks of components shall be presented for examination after works trials are left to the discretion of the Register.

4. PROCEDURE FOR ICE TESTS AFTER INSTALLATION ONBOARD

4.1 Objectives

The purpose of the shipboard testing is to verify compatibility with power transmission and driven machinery in the system, control systems and auxiliary systems necessary for the engine and integration of engine/shipboard control systems, as well as other items that had not been dealt with the FAT.

4.2 Starting capacity

Starting manoeuvres shall be carried out in order to verify that the capacity of the starting media satisfies the required number of start attempts.

4.3 Monitoring and alarm systems

Monitoring and alarm systems shall be checked to the full extent for all engines, except items already verified during bench trials (refer to Appendix 7 to Section 5, Part IV "Technical Supervision during Manufacture of Products").

4.4 Test loads

4.4.1 Test loads for various engine applications are given in this Chapter. In addition, the scope of the trials may be expanded depending on the engine application, service experience, or other relevant reasons. Besides, the tests of confirmation of compliance with the requirements of the IMO resolutions, international conventions, Maritime Administrations and other legislative acts may be requested.

4.4.2 The suitability of the engine to operate on fuels intended for use shall be demonstrated.

For DF engines, the test loads required shall be carried out both in gas mode and in diesel mode.

4.4.3 Propulsion engines (main engines) driving fixed pitch propeller or impeller:

A) 100 % engine power (rated maximum continuous power (MCR)) at rated engine speed *(n_r):* at least 4 h*;*

B) 110 % power at engine speed 1,032n_r, if engine adjustment permits (refer to 3.3.1): 30 min;

C) at approved intermittent overload (if applicable): testing for duration as agreed with the manufacturer;

D) minimum engine speed to be determined;

E) the ability of reversible engines to be operated in reverse direction shall be demonstrated. Refer also to 4.5.1.

During stopping tests (refer to IMO resolution MSC.137 (76)), also refer to 4.5.1 for additional requirements in the case of a barred speed range.

4.4.4 Propulsion engines (main engines) driving controllable pitch propellers (CPP):

A) At rated engine speed n_r with a propeller pitch leading to engine power MCR (or to the maximum available power if 100 % cannot be reached): at least 4 h;

B) at approved intermittent overload (if applicable): testing for duration as agreed with the manufacturer;

C) with reverse pitch suitable for manoevring, refer to 4.5.1 for additional requirements in the case of a barred speed range;

4.4.5 Engine(s) driving generator(s) for electrical propulsion and/or main power supply:

A) at 100 % power (rated electrical power of generator): at least 60 min;

B) at 110 % power rated electrical power of generator): at least 10 min.

N o t e . Each engine shall be tested 100 % electrical power for at least 60 min and 110 % of the rated electrical power of the generator for at least 10 min. This may, if possible, be done during the electric propulsion plant test, which is required to be tested with 100 % propulsion power (i. e. total electric motor capacity for the propulsion) by distributing the power on as few generators as possible. The duration of the test shall be sufficient to reach stable operating temperatures of all rotating machines or for at least 4 h. When some of the generator set(s) cannot be tested due to insufficient time during the propulsion system test mentioned above, those required tests shall be carried out separately;

C) demonstration of the generic prime movers' and governors' ability to handle load steps as described in 2.11.2, Part IX "Machinery" of the Rules for the Classifications and Construction of Sea-Going Ships.

4.4.6 Propulsion engines (main engines) also driving power take off (PTO) generator:

A) 100 % engine power (MCR) at corresponding speed (n_r);

B) 100 % propeller branch power at rated engine speed *(n_r)* (unless already covered in A): 2 h.;

C) 100 % PTO branch power at rated engine speed *(n_r):* at least 1 h.

4.4.7 Engines driving aixiliaries:

A) 100 % power (MCR) at corresponding speed n_r at least 30 min;

B) approved intermittent overload (in accordance with approved engine structures): testing for duration as approved.

4.5 Torsional vibrations

4.5.1 Barred speed range.

Where a barred speed range *(bsr)* is required, passages through this *bsr,* both accelerating and decelerating, shall be demonstrated. Applies both for manual and automatic passing-through systems, taking into account the ship design. The ship's draft and speed during all these demonstrations shall be recorded. In the case of a controllable pitch propeller, the pitch shall also to be recorded.

The times taken shall be recorded and shall be equal to or below those times stipulated in the approved documentation, if any. This also includes when passing through the *bsr* in reverse rotational direction, especially during the stopping test.

The engine is to be checked for stable running (steady fuel index) at both upper and lower borders of the bsr. Steady fuel index means an oscillation range less than 5 % of the effective stroke (idle to full index).

Additional requirements are given in Section 8, Part VII "Machinery Installations" of the Rules for the Classification and Construction of Sea-Going Ships.

APPENDIX 8

PROCEDURE FOR SURVEY AND ISSUE OF DOCUMENTS OF ICE COMPONENTS

1. GENERAL.

1.1 The ICE manufacturer shall have a quality control system that is suitable for the actual engine types to be certified by the Register. The quality control system shall also apply to any sub-suppliers. The Register reserves the right to review the system or parts thereof.

Materials and components shall be produced in compliance with all the applicable production and quality instructions specified by the ICE manufacturer. The Register requires that certain parts are verified and documented by means of the RS Certificate (C/C3 or a copy of CTO – in compliance with the Nomenclature etc), manufacturer's quality assurance certificates, or other delivery documents, whichever applicable.

1.2 Register Certificates (RC) mean the documents issued by the Register to certify the conformity of the finished component itself or material samples taken from earlier stages in the production of the components with the requirements of the RS Rules and normative documents (refer to Section 3, Part I "General Regulations of Technical Supervision" of the Rules), products (specimens) have been surveyed by the RS Surveyor, tests and other checks have been carried out in his presence or in compliance with the Agreement on Survey (CO) when C3 is drawn up (refer to 4.5, Part I "General Regulations for Technical Supervision" of the Rules).

Form of the Certificate to be issued shall be defined in accordance with the Nomenclature of Items of the Register Technical Supervision (refer to Appendix 1 to Part I "General Regulations for Technical Supervision".

1.3 Work certificate (W) means a document signed (affirmed) by the firm (manufacturer) official and confirmed the compliance with the following requirements:

the tests and inspections have been carried out on the finished certified product itself, or on specimens taken from the raw material, used for the product (taken from earlier stages in the production of the component);

the tests were witnessed and signed by a qualified representative of the applicable department of the manufacturer.

Work's Certificate may be considered equivalent to a Register Certificate and endorsed by the Register if: the test was witnessed by the Register Surveyor or when the CO is available between RS and manufacturer or the materials supplier; or

the tests carried out by the RS-recognized firm (laboratory) independent from the manufacturer or supplier of the materials.

1.4 Test Report (TR) means a document signed by the manufacturer stating: conformity with requirements;

the tests and inspections have been carried out on samples from the current production batch.

1.5 The documents above are used for product documentation as well as for documentation of single inspections such as crack detection, dimensional check, etc. If agreed by the Register the documentation of single tests and surveys may also be arranged by filling in results on a control sheet following the component through the production.

1.6 The RS Surveyor shall review the TR and W for compliance with the agreed or approved specifications. Issuing of RC requires that the RS Surveyor also witnesses the testing or CO is available.

1.7 The manufacturer is not exempted from responsibility for any relevant tests and inspections of those parts for which documentation is not explicitly requested by the Register.

The manufacturing process and equipment shall be set up and maintained in such a way that all materials and components can be consistently produced to the required standard. This includes production and assembly lines, machining units, special tools and devices, assembly and test benches as well as all lifting and transportation devices.

2. ICE COMPONENTS TO BE DOCUMENTED.

2.1 The extent of components to be documented depends on the type of engine, engine size and criticality of the component (as applicable with the ICE design).

2.2 Symbols used are listed in Table 2.2.1. A summary of the required documentation for the ICE components is listed in Table 2.2.2 (applicable only for the purpose of the present Appendix).

2.3 For components and materials not specified in Table 2.2.2, review shall be given by the Register upon full details being submitted.

Table 2.2.1

Symbol	Description
C	chemical composition
CD	crack detection by MPI or DP
CH	crosshead engines
D	cylinder bore diameter (mm)
GJL	gray cast iron
GJS	spheroidal graphite cast iron
GS	cast steel
M	mechanical properties
RC[1]	Register certificate[1]
TR	test report
UT	ultrasonic testing
W	work certificate
X	visual examination of accessible surfaces by the Surveyor
[1] RC – in compliance with the Nomenclature of items of the Register technical supervision.	

Table 2.2.2

Summary of required documentation for ICE components

No.	Component (Part)[1, 2, 3, 4, 5]	Material properties[6]	Non-destructive examination[7]	Hydraulic testing[8]	Dimensional inspection including surface condition	Visual inspection by surveyor	Applicable to ICE	Component certificate
1	Welded bedplate	W (C+M)	W (UT+CD)			fit-up + post welding	All	RC
2	Bearing transverse girders GS	W (C+M)	W (UT+CD)			×	All	RC
3	Welded frame box	W (C+M)	W (UT+CD)			fit-up + post welding	All	RC
4	Cylinder block GJL			W[9]			> 400 kW/cyl	
5	Cylinder block GJS			W[9]			> 400 kW/cyl	
6	Welded cylinder frames	W(C+M)	W(UT+CD)			fit-up + post welding	CH	RC
7	Engine block GJL			W[9]			>400 kW/cyl	
8	Engine block GJS	W (M)		W[9]			>400 kW/cyl	
9	Cylinder liner	W(C+M)		W[9]			*D* > 300mm	

No.	Component (Part)[1, 2, 3, 4, 5]	Material properties[6]	Non-destructive examination[7]	Hydraulic testing[8]	Dimensional inspection including surface condition	Visual inspection by surveyor	Applicable to ICE	Component certificate
10	Cylinder head GJL			W			*D* > 300mm	
11	Cylinder head GJS			W			*D* > 300mm	
12	Cylinder head GS	W(C+M)	W(UT+CD)	W		×	*D* > 300mm	RC
13	Forged cylinder head	W(C+M)	W(UT+CD)	W		×	*D* > 300mm	RC
14	Piston crown GS	W(C+M)	W(UT+CD)			×	*D* > 400mm	RC
15	Forged piston crown	W(C+M)	W(UT+CD)			×	*D* > 400mm	RC
16	Crankshaft: made in one piece	RC (C+M)	W(UT+CD)		W	Random, of fillets and oil bores	All	RC
17	Semi-built Crankshaft (Crankthrow, forged main journal and journals with flange)	RC (C+M)	W(UT+CD)		W	Random, of fillets and shrink fittings	All	RC
19	Piston rod	RC (C+M)	W(UT+CD)			Random	*D* > 400mm CH	RC
20	Cross head	RC (C+M)	W (UT+CD)			Random	CH	RC
21	Connecting rod with cap	RC (C+M)	W (UT+CD)		W	Random, of all surfaces, in particular those shot peened	All	RC
22	Coupling bolts for crankshaft	RC (C+M)	W (UT+CD)		W	Random, of interference	All	RC
23	Bolts and studs for main bearings	W (C+M)	W (UT+CD)				*D* > 300mm	
24	Bolts and studs for cylinder heads	W (C +M)	W (UT+CD)				*D* > 300mm	
25	Bolts and studs for connecting rods	W (C+M)	W (UT+CD)		TR of thread making		*D* > 300mm	
26	Tie rod	W (C+M)	W (UT+CD)		TR of thread making	Random	CH	RC
27	High pressure fuel injection pump body	W (C+M)		W			*D* > 300mm	
		W (C+M)		TR			*D* ≤300mm	
28	High pressure fuel injection valves (only for those not autofretted)			W			*D* > 300mm	
				TR			*D* ≤ 300 mm	
29	High pressure fuel injection pipes including common fuel rail	W (C+M)		W for those that are not autofrette d			*D* > 300mm	
		W (C+M)		TR for those that are not autofrette d			*D*4 300 mm	
30	High pressure common servo oil system	W (C+M)		W			*D* > 300 mm	
		W (C+M)		TR			*D* ≤ 300 mm	
31	Cooler[10], both sides	W (C+M)		W			*D* > 300 mm	

No.	Component (Part)[1, 2, 3, 4, 5]	Material properties[6]	Non-destructive examination[7]	Hydraulic testing[8]	Dimensional inspection including surface condition	Visual inspection by surveyor	Applicable to ICE	Component certificate
32	Accumulator	W (C+M)		W			All engines with accumulators with a capacity of > 0,5 l	
33	Piping, pumps, actuators, etc. for hydraulic drive of valves, if applicable	W (C+M)		W			> 800 kW/cyl.	
34	Engine driven pumps (oil, water, fuel, bilge) other than pumps referred to in items 27 and 33			W			>800 kW/cyl.	
35	Bearings for main, crosshead, and crankpin	TR(C)	TR (UT for full contact between basic base material and bearing metal)		W		>800 kW/cyl.	

Footnotes:

[1] Material certification requirements for pumps and piping components are dependent on the operating pressure and temperature. In case other Parts of the Rules define additional requirements for these elements, such requirements shall be met.

[2] For turbochargers, refer to Appendix 9.

[3] Crankcase safety explosion relief valves shall be type tested in accordance with Appendix 10 and documented according to 2.3.4.10 – 2.3.4.13, Part IX of the Rules for the Classification and Construction of Sea-Going Ships.

[4] Oil mist detection systems are to be type tested in accordance with Appendix 11 and documented according to 2.3.4.9, Part IX of the Rules for the Classification and Construction of Sea-Going Ships.

[5] For speed governor and overspeed protective devices, refer to 2.11, Part IX of the Rules for the Classification and Construction of Sea-Going Ships.

[6] Material properties include chemical composition and mechanical properties, and also surface treatment such as surface hardening (hardness, depth and extent), peening and rolling (extent and applied force).

[7] Nomdestructive examination means e.g. ultrasonic testing, crack detection by MPI or DP.

[8] Hydraulic testing is applied on the water/oil side of the component. Items shall be tested by hydraulic pressure at the pressure equal to 1,5 times the maximum working pressure. High pressure parts of the fuel injection system are to be tested by hydraulic pressure at the pressure equal to 1,5 maximum working pressure or maximum working pressure plus 30 MPa, whichever is the less. Where design or testing features may require modification of these test requirements, special consideration may be given.

[9] Hydraulic testing is also required for those parts filled with cooling water and having the function of containing the water which is in contact with the cylinder or cylinder liner.

[10] Charge air coolers need only be tested on the water side.

APPENDIX 9

PROCEDURE FOR SURVEY, TESTING, APPROVAL OF TURBOCHARGERS AND THEIR MATCHING ON ICE

1. SCOPE.

1.1 These requirements are applicable for turbochargers (TC) with regard to design approval, type testing and certification and their matching on engines.

TC shall be type approved, either separately or as a part of an ICE. The requirements are written for exhaust gas driven turbochargers, but apply in principle also for engine driven chargers.

1.2 The requirements escalate with the size of TC. The parameter for size is the engine power (at MCR) supplied by a group of cylinders served by the actual TC, (e.g. for a V-engines with one TC for each bank the size is half of the total ICE power).

1.3 TC are categorised in three groups depending on served power by cylinder groups with:

Category A: ≤ 1000 kW;
Category B: > 1000 kW and ≤ 2500 kW;
Category C: > 2500 kW.

2. DOCUMENTATION TO BE SUBMITTED.

2.1 Category A:

On the Register request:
containment test report;
cross sectional drawing with principal dimensions and names of components;
test program.

2.2 Category B and C:

cross sectional drawing with principal dimensions and materials of housing components for containment evaluation;
documentation of containment in the event of disc fracture (refer to 3.2);
Operational data and limitations as:
maximum permissible operating speed (rpm);
alarm level for exhaust gas temperature before turbine;
maximum permissible exhaust gas temperature before turbine;
minimum lubrication oil inlet pressure;
lubrication oil inlet pressure low alarm set point;
maximum lubrication oil outlet temperature;
lubrication oil outlet temperature high alarm set point;
maximum permissible vibration levels, i.e. self- and externally generated vibration
(alarm levels may be equal to permissible limits but shall not be reached when operating the engine at 110 per cent power or at any approved intermittent overload beyond the 110 per cent).
arrangement of lubrication system, all variants within a range;
type test reports;
Test program.

2.3 Category C:

drawings of the housing and rotating parts including details of blade fixing;

material specifications (chemical composition and mechanical properties) of all parts mentioned above;

welding details and welding procedure of above mentioned parts, if applicable;

documentation of safe torque transmission when the disc is connected to the shaft by an interference fit, (refer to 3.3)[1];

information on expected lifespan, considering creep, low cycle fatigue and high cycle fatigue;

Operation and maintenance manuals[1].

3. DESIGN REQUIREMENTS AND CORRESPONDING TYPE TESTING.

3.1 General

3.1.1 The TC shall be designed to operate under conditions given in 2.3 Part VII "Machinery Installations" and 2.2.7, Part IX "Machinery" of the Rules for the Classification and Construction of Sea-Going Ships The component lifetime and the alarm level for speed shall be based on 45 °C air inlet temperature.

3.1.2 The air inlet of turbochargers shall be fitted with a filter.

3.2 TC Containment

3.2.1 TC shall fulfil containment in the event of a rotor burst. This means that at a rotor burst no part may penetrate the casing of the TC or escape through the air intake. For documentation purposes (test/ calculation), it shall be assumed that the discs disintegrate in the worst possible way.

3.2.2 For Category B and C, containment shall be documented by testing. Fulfilment of this requirement can be awarded to a generic range of TC based on testing of one specific unit. Testing of a large unit is preferred as this is considered conservative for all smaller units in the generic range. In any case, it must be documented (e.g. by calculation) that the selected test unit really is representative for the whole generic range.

3.2.3 The minimum test speeds, relative to the maximum permissible operating speed, are:

for the compressor: 120 per cent;

for the turbine: 140 per cent, or the natural burst speed, whichever is lower.

3.2.4 Containment tests shall be performed at working temperature.

3.2.5 A numerical analysis (simulation) of sufficient containment integrity of the casing based on calculations by means of a simulation model may be accepted in lieu of the practical containment test, provided that:

the numerical simulation model has been tested and its suitability/accuracy has been proven by direct comparison between calculation results and the practical containment test for a reference application (reference containment test). This test shall be performed at least once by the manufacturer for acceptance of the numerical simulation method in lieu of tests;

the corresponding numerical simulation for the containment is performed for the same speeds as specified for the containment test;

material properties for high-speed deformations shall be applied in the numeric simulation. The correlation between normal properties and the properties at the pertinent deformation speed shall be substantiated;

---

[1] Applicable to two sizes in a generic range of TC.

the design of the TC regarding geometry and kinematics is similar to the TC that was used for the reference containment test. In general, totally new designs shall call for a new reference containment test

3.3 Disc-shaft shrinkage fit

3.3.1 Applicable to Category C.

3.3.2 In cases where the disc is connected to the shaft with interference fit, calculations shall substantiate safe torque transmission during all relevant operating conditions such as maximum speed, maximum torque and maximum temperature gradient combined with minimum shrinkage amount.

3.4 Type testing

3.4.1 Applicable to Categories B and C.

3.4.2 The type test for a generic range of turbochargers may be carried out either on an engine (for which the TC is foreseen) or in a test bench.

3.4.3 TC shall be subjected to at least 500 load cycles at the limits of operation. This test may be waived if the TC together with the engine is subjected to this kind of low cycle testing (refer to Appendix 6).

3.4.4 The suitability of the TC for such kind of operation shall be preliminarily stated by the manufacturer.

3.4.5 The rotor vibration characteristics shall be measured and recorded in order to identify possible sub-synchronous vibrations and resonances.

3.4.6 The type test shall be completed by a hot running test at maximum permissible speed combined with maximum permissible temperature for at least one hour. After this test, the TC shall be opened for examination, with focus on possible rubbing and the bearing conditions.

3.4.7 The extent of the surveyor's presence during the various parts of the type tests is left to the discretion of the Register.

4. CERTIFICATION.

4.1 The manufacturer shall adhere to a quality system designed to ensure that the designer's specifications are met, and that manufacturing is in accordance with the approved drawings

4.2 For Category C, the requirement of 4.1 shall be verified by means of the manufacturer's (firm's) periodic check tests based on the Agreement on Survey (CO) (refer to 4.5, Part I "General Regulations for Technical Supervision" of the Rules).

4.3 These check tests shall focus on:

chemical composition of material for the rotating parts;

mechanical properties of the material of a representative specimen for the rotating parts and the casing;

UT and crack detection of rotating parts;

dimensional inspection of rotating parts;

rotor balancing;

hydraulic testing of cooling spaces to 4 bars or 1,5 times maximum working pressure, whichever is higher;

overspeed test of all compressor wheels for a duration of 3 min at either 20 per cent above alarm level speed at room temperature or 10 per cent above alarm level speed at 45 °C inlet temperature when tested in the actual housing with the corresponding pressure ratio. The overspeed test may be waived for forged wheels that are individually controlled by an approved non-destructive method.

4.4 TC shall be delivered with:

For Category C – Certificate (C), (Form 6.5.30), with the reference to Type Approval Certificate (CTO) (Form 6.8.3), or Certificate (C3) (Form 6.5.31), when Agreement of Survey (CO) (Form 430.1.7), applies.

For Category B – a work's certificate (W), with the reference to Type Approval Certificate (CTO) (Form 6.8.3), which includes production assessment.

4.5 Provisions specified in 4.4 apply to replacement of rotating parts and casing.

4.6 The above periodic product audits, individual certification of a TC and its parts may be made at the discretion of the Register.

However, such individual certification of Category C TC and its parts shall also be based on test requirements specified in the above mentioned bullet points.

5. ALARMS AND MONITORING.

5.1 For all TC of Categories B and C, indications and alarms as listed in Table 5.2 shall be required.

5.2 Indications may be provided at either local or remote locations.

Table 5.2

№	Monitored Parameters	Category of Turbochargers				Notes
		B		C		
		Alarm	Indication	Alarm	Indication	
1	Speed	High[1]	X[1]	High[1]	X[1]	
2	Exhaust gas at each turbocharger inlet, temperature	High[2]	X[2]	High	X	High temp. alarms for each cylinder at engine is acceptable [3]
3	Lub. oil at turbocharger outlet, temperature			High	X	If not forced system, oil temperature near bearings
4	Lub. oil at turbocharger inlet, pressure	Low	X	Low	X	Only for forced lubrication systems [4]

[1] On turbocharging systems where turbochargers are activated sequentially, speed monitoring is not required for the turbocharger(s) being activated last in the sequence, provided all turbochargers share the same intake air filter and they are not fitted with waste gates.

[2] For Category B TC, the exhaust gas temperature may be alternatively monitored at the turbocharger outlet, provided that the alarm level is set to a safe level for the turbine and that correlation between inlet and outlet temperatures is substantiated.

[3] Alarm and indication of the exhaust gas temperature at TC inlet may be waived if alarm and indication for individual exhaust gas temperature is provided for each cylinder and the alarm level is set to a value safe for the TC.

[4] Separate sensors shall be provided if the lubrication oil system of the TC is not integrated with the lubrication oil system of the diesel engine or if it is separated by a throttle or pressure reduction valve from the diesel engine lubrication oil system.

APPENDIX 10

TYPE TESTING PROCEDURE FOR CRANKCASE EXPLOSION RELIEF VALVES

1. SCOPE.

1.1 The Procedure specifies standard conditions for the type testing of crankcase explosion relief valves of internal combustion engines and reduction gears with use of methane gas and air mixture to confirm the Register's requirements.

1.2 The Procedure is only applicable to explosion relief valves fitted with flame arresters.

N o t e . Where internal oil wetting of a flame arrester is a design feature of an explosion relief valve, alternative testing arrangements developed by the valves manufacturer to confirm this procedure requirements may be used by agreement with the Register.

2. RECOGNISED STANDARDS AND NORMATIVE REFERENCES.

2.1 The procedure has been developed on the basis of IACS Unified Requirements M66 (Rev.3 Jan 2008) "Type Testing Procedure for Crankcase Explosion Relief Valves". Where appropriate, the following normative documents may be used:

.1 Standard EN 12874:2001: Flame arresters – Performance requirements, test methods and limits for use;

.2 Standard ISO/IEC EN 17025:2005: General requirements for the competence of testing and calibration laboratories;

.3 Standard EN 1070:1998: Safety of Machinery – Terminology;

.4 Standard VDI 3673: Part 1: Pressure Venting of Dust Explosions;

.5 IMO Circular MSC/Circ. 677: Revised Standards for the Design, Testing and Locating of Devices to Prevent the Passage of Flame into Cargo Tanks in Tankers.

3. EXTENT OF VERIFICATIONS.

3.1 Type testing of crankcase explosion relief valves provides for four main kinds of verifications according to 3.1.1 to 3.1.4.

3.1.1 Verification of flame arrester effectiveness.

3.1.2 Verification of valve closing after an explosion.

3.1.3 Verification of valve airtightness/gastightness after an explosion.

3.1.4 Determination of the level of overpressure protection provided by the valve.

4. EQUIPMENT OF TESTING LABORATORY.

4.1 The testing laboratory carrying out type testing of crankcase explosion relief valves shall meet the requirements in 4.1.1 to 4.1.11.

4.1.1 The testing laboratory where testing is carried out shall be recognized by the Register and also to comply with the requirements of applicable national and international standards.

4.1.2 The laboratory shall be equipped so that it can perform and record explosion testing in accordance with this procedure.

4.1.3 The equipment for controlling and measuring a methane gas in air concentration within a test vessel shall ensure an accuracy of ±0,1 per cent.

4.1.4 The equipment shall be capable of effective point-located ignition of a methane gas in air mixture.

4.1.5 The pressure measuring equipment shall be capable of measuring the pressure in the test vessel in at least two positions, one at the valve and the other at the test vessel centre. The measuring arrangements shall be capable of measuring and recording the pressure changes throughout an explosion test at a frequency recognizing the speed of events during the explosion. The result of each test shall be documented by video recording and, if necessary, by recording with a heat sensitive camera.

4.1.6 The test vessel for explosion testing shall have documented dimensions. The dimensions shall be such that the vessel is not "pipe like" with the distance between dished ends being not more than 2,5 times its diameter. The internal volume of the test vessel shall include any standpipe arrangements.

4.1.7 The test vessel shall be provided with a flange, located centrally at one end perpendicular to the vessel longitudinal axis, for mounting the explosion relief valve. The test vessel shall be arranged in an orientation consistent with how the valve will be installed in service, i.e., in the vertical plane or the horizontal plane.

4.1.8 A circular plate shall be provided for fitting between the pressure vessel flange and valve to be tested with the following dimensions:

.1 outside diameter of 2 times the outer diameter of the valve top cover;

.2 internal bore having the same internal diameter as the valve to be tested.

4.1.9 The test vessel shall have connections for measuring the methane in air mixture at the top and bottom.

4.1.10 The test vessel shall be provided with a means of fitting an ignition source at the position specified in 5.3.

4.1.11 The test vessel volume shall be as far as practicable related to the size and capability of the relief valve to be tested. In general, the volume shall correspond to the requirements in 2.3.4.3, Part IX "Machinery" of the Rules for the Classification and Construction of Sea-Going Ships, for the free area of the explosion relief valve to be not less than 115 cm^2/m^3 of the crankcase gross volume, i.e. the testing of a valve having 1150 cm^2 of free area would require a test vessel with a volume of 10 m^3. Where the free area of relief valves is greater than 115 cm^2/m^3 of the crankcase gross volume, the volume of the test vessel shall be consistent with the design ratio. In no case shall the volume of the test vessel vary by more than ±15 per cent from the design ratio of the free area of the valve to the crankcase volume (cm^2/m^3).

5. EXPLOSION TEST PROCESS.

5.1 All explosion tests to verify the functionality of crankcase explosion relief valves shall be carried out using an air and methane mixture with a volumetic methane concentration of 9,5±0,5 per cent. The pressure in the test vessel shall be not less than atmospheric and shall not exceed the opening pressure of the relief valve.

5.2 The concentration of methane in the test vessel shall be measured at the top and bottom of the vessel and these concentrations shall not vary by more than 0,5 per cent.

5.3 The ignition of the methane and air mixture shall be made at the centerline of the test vessel a to a position approximately 1/3 of the height or length of the test vessel opposite to where the valve is mounted.

5.4 The ignition shall be made using a maximum 100 J explosive charge.

6. VALVES TO BE TESTED.

6.1 The valves used for type testing (including testing specified in 6.3) shall be selected from the manufacturer's normal production line for such valves by the classification society's representative witnessing the tests.

6.2 For type approval of a specific valve size, three valves shall be tested in accordance with 6.3 and 7. For a series of valves, in accordance with 9.

6.3 The valves selected for type testing shall have been previously tested at the firm (manufacturer) to demonstrate that the opening pressure is 0,05 bar ±20 per cent and that the valve is airtight at a pressure below the opening pressure for at least 30 s. This test shall verify that the valve is airtight following assembly at the manufacturer's works and that the valve begins to open at the required pressure demonstrating that the correct spring has been fitted.

6.4 The type testing of valves shall recognize the orientation in which they are intended to be installed on the engine or gear case. Three valves of each size shall be tested for each intended installation orientation, i.e. in the vertical and/or horizontal positions.

7. TEST METHOD.

7.1 The requirements of 7.1.1 to 7.1.5 shall be satisfied at explosion testing.

7.1.1 The explosion testing shall be witnessed by the Surveyor of Register.

7.1.2 Where valves shall be installed on an engine or gear case with shielding arrangements to deflect the emission of explosion combustion products, the valves shall be tested with the shielding arrangements fitted.

7.1.3 Successive explosion testing to establish valve functionality shall be carried out as quickly as possible during stable weather conditions.

7.1.4 The pressure rise and decay during all explosion testing shall be recorded.

7.1.5 The external condition of the valves shall be monitored during each test for indication of any flame release by video and heat sensitive camera (refer to 4.1.5).

7.2 The explosion testing shall be in three stages for each valve that is required to be approved as being type tested.

7.2.1 Stage 1.

7.2.1.1 Two explosion tests shall be carried out in the test vessel with the circular plate described in 4.1.8 fitted and the opening in the plate covered by a 0,05 mm thick polythene film. These tests establish a reference pressure level for determination of the capability of a relief valve in terms of pressure rise in the test vessel (refer to 8.1.6).

7.2.2 Stage 2.

7.2.2.1 Two explosion tests shall be carried out on three different valves of the same size. Each valve shall be mounted in the orientation for which approval is sought, i.e. in the vertical or horizontal position with the circular plate described in 4.1.8 located between the valve and pressure vessel mounting flange.

7.2.2.2 The first of the two tests on each valve shall be carried out with a 0,05 mm thick polythene bag, having a minimum diameter of three times the diameter of the circular plate and volume not less than 30 per cent of the test vessel, enclosing the valve and circular plate. Before carrying out the explosion test the polythene bag shall be empty of air. The polythene bag is required to provide a readily visible means of assessing whether there is flame transmission through the relief valve following an explosion.

N o t e . During the test, the explosion pressure will open the valve and some unburned methane/air mixture will be collected in the polythene bag. When the flame reaches the flame arrester and if there is flame transmission through the flame arrester, the methane/air mixture in the bag will be ignited and this will be visible.

7.2.2.3 Provided that the first explosion test successfully demonstrated that there was no indication of combustion outside the flame arrester and there are no visible signs of damage to the flame arrester or valve, the second explosion test without the polythene bag arrangement shall be carried out as quickly as possible after the first test. During the second explosion test, the valve shall be visually monitored for any indication of combustion outside the flame arrester and video records shall be kept for subsequent analysis. The second test is required to demonstrate that the valve can still function in the event of a secondary crankcase explosion.

7.2.2.4 After each explosion, the test vessel shall be maintained in the closed condition for at least 10 s to enable the tightness of the valve to be ascertained. The tightness of the valve can be verified during the test from the pressure/time records or by a separate test after completing the second explosion test.

7.2.3 Stage 3.

7.2.3.1 Two more explosion tests are carried out as described in Stage 1. These further tests are required to provide an average baseline value for assessment of pressure rise, recognizing that the test vessel ambient conditions may have changed during the testing of the explosion relief valves in Stage 2.

8. ASSESSMENTS AND RECORDS.

8.1 To confirm compliance of the valves used for explosion testing with the requirements of this procedure, the valves shall be assessed in accordance with 8.1.1 to 8.1.9 with the data documented.

8.1.1 Technical documentation for the valves to be tested shall be approved by the Register.

8.1.2 The designation, dimensions and characteristics of the valves to be tested shall be specified in the technical documentation and test reports. The data shall include the free area of the valve and of the flame arrester and the amount of valve lift at a pressure of 0,2 bar.

8.1.3 The test vessel volume shall be determined and recorded.

8.1.4 For acceptance of the functioning of the flame arrester, there shall not be any indication of flame or combustion outside the valve during an explosion test. This should be confirmed by the testing laboratory taking into account measurements from the heat sensitive camera (refer to 4.1.5).

8.1.5 The pressure rise and decay during an explosion shall be recorded, with indication of the pressure variation showing the maximum overpressure and steady underpressure in the test vessel during testing. The pressure variation shall be recorded at two points in the pressure vessel.

8.1.6 The effect of an explosion relief valve in terms of pressure rise following an explosion is ascertained from maximum pressures recorded at the centre of the test vessel during the three stages. The pressure rise within the test vessel due to the installation of a relief valve is the difference between the average pressure of the four explosions from Stages 1 and 3 and the average of the first tests on the three valves in Stage 2. The pressure rise shall not exceed the limit specified by the manufacturer.

8.1.7 The valve tightness shall be ascertained by verifying from the records at the time of testing that an underpressure of at least 0,3 bar is held by the test vessel for at least 10

s following an explosion. This test shall verify that the valve has effectively closed and is reasonably gas-tight following dynamic operation during an explosion.

8.1.8 After each explosion in Stage 2, the external condition of the flame arrester shall be examined for signs of serious damage and/or deformation that may affect the operation of the valve.

8.1.9 After completing the explosion tests, the valves shall be dismantled and the condition of all components ascertained and documented. In particular, any indication of valve sticking or uneven opening that may affect operation of the valve shall be noted. Photographic records of the valve condition shall be taken and included in the report.

9. DESIGN SERIES QUALIFICATION.

9.1 The qualification of quenching devices to prevent the passage of flame can be evaluated for other similar devices of the identical type where one device has been tested and found satisfactory.

9.2 The quenching ability of a flame arrester depends on the total mass of quenching lamellas/mesh. Provided the materials, thickness of materials, depth of lamellas/thickness of mesh layer and the quenching gaps are the same, then the same quenching ability can be qualified for different sizes of flame arresters subject to the following conditions being satisfied:

$$n_1/n_2 = \sqrt{S_1/S_2}; \quad (9.2\text{-}1)$$

$$A_1/A_2 = S_1/S_2, \quad (9.2\text{-}2)$$

where n_1 = total depth of flame arrester corresponding to the number of lamellas of size 1 quenching device for a valve with a relief area equal to S_1;
n_2 = total depth of flame arrester corresponding to the number of lamellas of size 2 quenching device for a valve with a relief area equal to S_2;
A_1 = free area of quenching device for a valve with a relief area equal to S_1;
A_2 = free area of quenching device for a valve with a relief area equal to S_2.

9.3 The qualification of explosion relief valves of larger sizes than that which has been previously satisfactorily tested in accordance with Sections 7 and 8 can be evaluated where valves are of the identical type and have identical features of construction subject to the conditions set forth in 9.3.1 to 9.3.3.

9.3.1 The free area of a larger valve does not exceed three times +5 per cent that of the valve that has been satisfactorily tested.

9.3.2 One valve of the largest size, subject to 9.3.1, requiring qualification is subject to satisfactory testing required by 6.3 and 7.2.2 except that a single valve will be accepted in 7.2.2.1 and the volume of the test vessel shall not be less than 1/3 of the volume required by 4.1.11.

9.3.3 The assessment and records shall be in accordance with Section 8 noting that 8.1.6 will only be applicable to Stage 2 for a single valve (refer to 7.2.2).

9.4 The qualification of explosion relief valves of smaller sizes than that which has been previously satisfactorily tested in accordance with Sections 7 and 8 can be evaluated where valves are of the identical type and have identical features of construction subject to the conditions set forth in 9.4.1 to 9.4.3.

9.4.1 The free area of a smaller valve shall not be less than one third of that of the valve that has been satisfactorily tested.

9.4.2 One valve of the smallest size, subject to 9.4.1, requiring qualification is subject to satisfactory testing required by 6.3 and 7.2.2 except that a single valve will be accepted in 7.2.2.1 and the volume of the test vessel shall not be more than the volume required by 4.1.11.

9.4.3 The assessment and records shall be in accordance with Section 8 noting that 8.1.6 will only be applicable to Stage 2 for a single valve (refer to 7.2.2).

10. THE REPORT.

10.1 The testing laboratory shall submit a detailed report that includes the information and documents according to 10.1.1 to 10.1.8:

.1 specification or program for test performance;
.2 details of test pressure vessel and valves tested;
.3 the orientation in which the valve was tested (vertical or horizontal position);
.4 methane in air concentration for each test;
.5 ignition source;
.6 pressure curves for each test;
.7 video recordings of each valve test;
.8 the assessment and records stated in Section 8.

11. APPROVAL.

11.1 The approval of an explosion relief valve is carried out by the Register based on the approved technical documentation, considering the approved program, assessment of test results and testing laboratory report on type testing performed.

APPENDIX 11

TYPE TESTING PROCEDURE FOR CRANKCASE OIL MIST DETECTION AND ALARM EQUIPMENT

1. SCOPE.

1.1 The Procedure specifies the extent of tests to confirm that crankcase oil mist detection and alarm equipment fitted to internal combustion engines meets the Register's requirements.

N o t e . This Test Procedure is also applicable to oil mist detection and alarm equipment intended for gear cases.

2. RECOGNISED STANDARDS AND NORMATIVE REFERENCES.

2.1 The Procedure has been developed on the basis of IACS Unified Requirement M67 (Rev.2 Feb 2015) "Type Test Procedure for Crankcase Oil Mist Detection and Alarm Equipment".

Where appropriate, the following normative documents may be used:

IACS Unified Requirement E10 "Test Specification for Type Approval";

RS Procedure for Testing and Drawing up Type Approval Certificates for Electrical and Electronic Automation Equipment, Computers and Peripheral Facilities;

"Standards and Methods of Testing Automation Equipment" (refer to Appendix 1 to Section 12).

3. EXTENT OF VERIFICATIONS.

3.1 The procedure for type testing of crankcase oil mist detection and alarm equipment provides for the verification of:

.1 functionality of the system;
.2 effectiveness of oil mist detectors;
.3 accuracy of oil mist detectors;
.4 alarm set points;
.5 time delays between oil mist leaving the source and alarm activation;
.6 functional failure detection;
.7 influence of optical obscuration on detection.

4. TEST FACILITIES.

4.1 The testing laboratory carrying out type testing of crankcase oil mist detection and alarm equipment shall meet the requirements of 4.1.1 to 4.1.2.

4.1.1 All the equipment for carrying out functional and other tests required by this Procedure shall be available for examination by the Surveyor to the Register.

4.1.2 The testing laboratory that verifies crankcase oil mist detection and alarm equipment shall be equipped so that it can control, measure and record oil mist concentration levels in terms of mg/l to an accuracy of ±10 per cent in accordance with this Procedure.

4.1.3 When verifying the functionality, test houses shall consider the possible hazards associated with the generation of the oil mist required and take adequate precautions. IACS shall accept the use of low toxicity, low hazard oils as used in other applications, provided it is demonstrated to have similar properties to SAE 40 monograde mineral oil specified.

5. TESTING OF CRANKCASE OIL MIST DETECTION AND ALARM EQUIPMENT.

5.1 **The range of tests shall include the following.**

5.1.1 For the alarm/monitoring panel:

.1 functional tests according to Section 6;
.2 electrical power supply failure test;
.3 power supply variation test;
.4 dry heat test;
.5 damp heat test;
.6 vibration test;
.7 EMC test;
.8 insulation resistance test;
.9 high voltage test;
.10 static and dynamic inclinations.

5.1.2 For the detectors:

.1 functional tests according to Section 6;
.2 electrical power supply failure test;
.3 power supply variation test;
.4 dry heat test;
.5 damp heat test;
.6 vibration test;
.7 insulation resistance test;
.8 high voltage test;
.9 static and dynamic inclinations.

N o t e . Refer also to Appendix 1 to Section 12, Part IV "Technical Supervision during Manufacture of Products" of the Rules.

6. FUNCTIONAL TESTS.

6.1 All the tests to verify the functionality of crankcase oil mist detection and alarm equipment shall be carried out in accordance with 6.2 to 6.6 with an oil mist concentration in air known in terms of mg/l to an accuracy of ±10 per cent.

6.2 The concentration of oil mist in the test chamber shall be measured in the top and bottom of the chamber and these concentrations shall not differ by more than 10 per cent (refer also to 8.1.1.1).

6.3 The oil mist detector monitoring arrangements shall be capable of detecting oil mist in air concentrations of between 0 and 10 per cent of the lower explosive limit (LEL) or between 0 and a percentage of weight of oil in air determined by the Manufacturer based on the sensor measurement method (e.g. obscuration or light scattering) that is acceptable to the Register taking into account the alarm level specified in 6.4.

N o t e . The LEL corresponds to an oil mist concentration of approximately 50 mg/l (~4,1 per cent weight of oil in air mixture).

6.4 The alarm set point for oil mist concentration in air shall provide an alarm at the maximum level corresponding to not more than 5 per cent of the LEL or approximately 2,5 mg/l.

6.5 Where alarm set points can be altered, the means of adjustment and indication of set points shall be verified against the equipment manufacturer's instructions.

6.6 The performance of the oil mist detector in mg/l is to be demonstrated. This is to include the following: range (oil mist detector), resolution (oil mist detector), sensitivity (oil mist detector).

N o t e . Sensitivity of a measuring system: quotient of the change in an indication of a measuring system and the corresponding change in a value of a quantity being measured.

Resolution: smallest change in a quantity being measured that causes a perceptible change in the corresponding indication.

6.7 Where oil mist is drawn into a detector via piping arrangements, the time delay between the sample leaving the crankcase and operation of the alarm shall be determined for the longest and shortest lengths of pipes recommended by the manufacturer. The pipe arrangements shall be in accordance with the manufacturer's instructions/recommendations. Piping shall be arranged to prevent pooling of oil condensate which may cause a blockage of the sampling pipe over time

6.8 It shall be demonstrated that the openings of detector equipment shall not become occluded or blocked under continuous splash and spray of engine lubricating oil, as may occur in the crankcase atmosphere. Testing shall be in accordance with arrangements proposed by the manufacturer and agreed by the Register. The temperature, quantity and angle of impact of the oil to be used shall be declared and their selection justified by the manufacturer.

6.9 Detector equipment may be exposed to water vapour from the crankcase atmosphere which may affect the sensitivity of the equipment and it shall be demonstrated that exposure to such conditions will not affect the functional operation of the detector equipment. Where exposure to water vapour and/or water condensation has been identified as a possible source of equipment malfunctioning, testing shall demonstrate that any mitigating arrangements such as heating are effective. The manufacturer (testing laboratory)-developed arrangements for this type of tests shall be agreed with the Register.

N o t e . This testing is in addition to that required by 5.1.2.5 and is concerned with the effects of condensation caused by the detector equipment being at a lower temperature than the crankcase atmosphere.

6.10 It shall be demonstrated that an indication is given where lenses fitted in the equipment and used in determination of the oil mist level have been partially obscured to a degree that shall affect the reliability of the information and alarm indication as required by 2.3.3.16, Part IX "Machinery" of the Rules for the Classification and Construction of Sea-Going Ships.

7. DETECTORS AND ALARM EQUIPMENT TO BE TESTED.

7.1 The detectors and alarm equipment selected for the type testing shall be selected from the manufacturer's normal production line by the Surveyor to the Register.

7.2 Two detectors shall be tested. One shall be tested in clean condition and the other in a condition representing the maximum level of lens obscuration specified by the manufacturer.

8. TEST METHOD.

8.1 **The following requirements shall be satisfied at type testing**:

8.1.1 Oil mist generation shall satisfy the requirements of 8.1.1.1 to 8.1.1.5.

8.1.1.1 The ambient temperature in and around the test chamber shall be at the standard atmospheric conditions before any test run is started:

air temperature: 25 °C ±10 °C;

relative humidity: 60 per cent ±30 per cent;

air pressure: 96 KPa ±10KPa.

8.1.1.2 Oil mist shall be generated with suitable equipment using an SAE 40 monograde mineral oil or equivalent and supplied to a test chamber. The selection of the oil to be used shall take into consideration risks to health and safety, and the appropriate controls implemented. A low toxicity, low flammability oil of similar viscosity may be used as an alternative. The oil mist produced shall have an average (or arithmetic mean) droplet size not exceeding 5 µm. The oil droplet size shall be checked using the sedimentation method or an equivalent method to a relevant international or national standard. If the sedimentation method is chosen, the test chamber shall have a minimum height of 1m and volume of not less than 1 m^3.

8.1.1.3 The oil mist concentrations used shall be ascertained by the gravimetric deterministic method or equivalent. Where an alternative technique is used its equivalence shall be demonstrated.

N o t e . For this test, the gravimetric deterministic method is a process where the difference in weight of a 0,8 µm pore size membrane filter is ascertained from weighing the filter before and after drawing 1 litre of oil mist through the filter from the oil mist test chamber. The oil mist chamber shall be fitted with a recirculating fan.

8.1.1.4 Samples of oil mist shall be taken at regular intervals and the results plotted against the oil mist detector output. The oil mist detector shall be located adjacent to where the oil mist samples are drawn off.

8.1.1.5 The results of a gravimetric analysis are considered invalid and shall be rejected if the resultant calibration curve has an increasing gradient with respect to the oil mist detection reading. This situation occurs when insufficient time has been allowed for the oil mist to become homogeneous. Single results that are more than 10 per cent below the calibration curve shall be rejected. This situation occurs when the integrity of the filter unit has been compromised and not all of the oil is collected on the filter paper.

8.1.1.6 The filters require to be weighed to a precision of ±0,1 mg and the volume of air/oil mist sampled to ±10 ml.

8.1.2 For type approval by the Register the testing shall be witnessed by authorised personnel from the Register.

8.1.3 Oil mist detection equipment shall be tested in the orientation (vertical, horizontal or inclined) in which it is indended to be installed on an engine or gear case as specified by the equipment manufacturer.

8.1.4 Type testing shall be carried out for each type of oil mist detection and alarm equipment for which a manufacturer seeks type approval. Where sensitivity levels can be adjusted, testing shall be carried out at the extreme and mid-point level settings.

9. EQUIPMENT CONDITION ASSESSMENT AND DOCUMENTATION.

9.1 Assessment of oil mist detection equipment after testing shall be carried out in accordance with the requirements in 9.1.1 to 9.1.3.

9.1.1 Technical documentation for the equipment (devices) being tested shall be approved by the Register.

9.1.2 The name of a testing laboratory and manufacturer, type designation, oil mist concentration assessment capability and alarm settings shall be specified in test reports, as well as maximum percentage level of lens obscuration (refer to 7.2).

9.1.3 After completing the tests, the oil mist detection equipment shall be examined and the condition of all components noted in the test report, which shall have equipment photographs attached.

10. DESIGN SERIES QUALIFICATION.

10.1 If agreed by the Register, the approval of one type of detection equipment may be used to qualify other devices having identical design details what shall be confirmed by the manufacturer's relevant documentation.

11. THE REPORT.

11.1 The testing laboratory shall submit a full report which includes the information and documents according to 11.1.1 to 11.1.3:

.1 description of the test process and test equipment;

.2 details of equipment tested;

.3 results of tests, including a declaration by the manufacturer of the oil mist detector of its:

performance, in mg/L;

range, of oil mist detector;

precision, of oil mist concentration in air;

range, of oil mist detector;

resolution, of oil mist detector;response time, of oil mist detector;

sensitivity, of oil mist detector;

obscuration of sensor detection, declared as percentage of obscuration. 0 per cent totally clean, 100 per cent totally obscure;

detector failure alarm.

12. ACCEPTANCE.

12.1 Crankcase oil mist detection equipment is accepted by the Register on the basis of the approval of technical documentation, reports and test reports of the testing laboratory with the type testing results.

12.2 To accept oil mist detection and alarm equipment, the documentation as per 12.2.1 to 12.2.4 shall be submitted.

12.2.1 Description of oil mist detection equipment and system including alarms.

12.2.2 Copy of the test report according to the requirements of Section 11.

12.2.3 Schematic layout of engine oil mist detection arrangements showing location of detectors/ sensors and piping arrangements and dimensions.

12.2.4 Maintenance and test manual, which shall include the following information:

.1 intended use of equipment and its operation;

.2 functionality tests to demonstrate that the equipment is operational and that any faults can be identified and eliminated;

.3 maintenance routines and spare parts recommendations;

.4 limit setting and instructions for safe limit levels;

.5 where necessary, details of configurations in which the equipment is and shall not be used.

6 SHAFTING COMPONENTS

6.1 GENERAL

6.1.1 The provisions of this Section apply during the technical supervision of the shafting components listed in the RS Nomenclature.

6.1.2 The Section lays down the procedure of technical supervision during the manufacture of the above mentioned items at the manufacturer's.

6.1.3 The procedure and scope of the checks, tests and surveys of the articles during the manufacture thereof are determined from Table 6.1.3, the requirements of this Section as well as from a list to be developed by the manufacturer in accordance with 12.2, Part I "General Regulations for Technical Supervision" and agreed with the RS Branch Office. When developing the list, the features of the manufacturing process adopted at the manufacturer's shall be taken into consideration.

Table 6.1.3

Items of technical supervision	Verification of technical documentation (see 6.1.8)	External examination	Verification of geometric dimensions	Flaw detection	Hydraulic test and check for tightness	Mating of shafts
Shafting:						+
thrust shafts	+	+	+	+		+
intermediate shaft	+	+	+	+		+
propeller (stern)[1] shaft	+	+	+	+	+[2]	+
propeller (stern)[1] shaft liner	+	+	+	+	+	
shaft couplings	+	+	+			+

[1] From here on, all the requirements for the propeller shafts and propeller shaft liners cover, respectively, the stern shafts and stern shaft liners as far as they are applicable.
[2] For liners consisting of two or more lengths to be welded on the shaft.

6.1.4 The construction of the shafts and their components shall comply with the approved technical documentation and meet the requirements of Part VII "Machinery Installations" of the Rules for the Classification and Construction of Sea-Going Ships. The manufacture of the shafting, their components and assemblies and the production operations shall be carried out under the technical supervision of the Register in accordance with the approved technical documentation listed in Part I "Classification" of the Rules for the Classification and Construction of Sea-Going Ships, as applied to the shafting.

6.1.5 The forms of the manufacturer's documents (measurement tables, requests for the presentation to surveying, etc.) shall be developed by the manufacturer or shipyard and agreed with the Register.

6.1.6 The inspection methods, tools and devices for measuring, testing and inspecting shall be determined by the manufacturer or shipyard, indicated in the process documentation and, where necessary, agreed with the Register.

6.1.7 The results of measurements made during the manufacture of the components shall encompass all measuring points, specified by the technical documentation, instructions for assembly, installation and operation of the shafting. The measurements shall be checked by the surveyor to the Register at random.

6.1.8 The materials, related equipment, blanks and components used for the manufacture and completing of the items and products which have to be subjected to the

technical supervision shall have marking and documents confirming the Register technical supervision during the manufacture thereof in accordance with the RS Nomenclature.

6.1.9 Prior to treatment, installation or assembling, the materials, components (blanks) and related articles shall be subjected to external examination in order to check their condition and compliance with the accompanying documentation. In specific cases, the examination and check shall be carried out by the Surveyor to the Register. During external examination, material, component or article shall be examined visually, with the accompanying documents as well as the manufacturer's certificates, measurement tables, flaw detection results and availability of the brands and marking being verified and checked.

Based on the external examination results and availability of the documents mentioned in 6.1.8, the possibility for launching production shall be explored.

6.1.10 Where the casting and forging defects must and can be corrected by welding, the requirements stated in the technical documentation shall be taken as a guide. The specifications of drawings shall indicate the method for correction of the defects, their nature, number and size, position of the defects or references to the guidelines and process documentation shall be made.

6.1.11 Machining and other types of treatments shall generally exclude heating and cold-work hardening. These shall be eliminated by heat treatment.

6.1.12 When conducting the hydraulic tests, it is necessary to be guided by the requirements of the technical documentation, defining the test conditions and by the requirements of 1.3, Part IX "Machinery" and 5.9, Part VII "Machinery Installations" of the Rules for the Classification and Construction of Sea-Going Ships.

6.1.13 For the finished articles (components) a document shall be issued, which is defined by the technical supervision form. The need for the issuance of the Register certificate and for the branding of the articles is stipulated by the RS Nomenclature.

6.2 THRUST, INTERMEDIATE AND PROPELLER SHAFTS

6.2.1 The treated shafts shall comply with the requirements of the technical documentation and this Chapter.

6.2.2 During the manufacture of the shafts and upon finalization of their treatment, it is necessary to perform:

.1 check for the compliance of the material quality with the requirements of the technical documentation;

.2 heat treatment and verification of the flaw detection results;

.3 check for the roughness of the working surfaces;

.4 check of the dimensions and shape of the surfaces treated;

.5 check of the radial run-out of the shafts, axial run-out of the flange and collar planes of the thrust shafts, concentricity of the outer and inner surfaces or variable wall difference of the shafts;

.6 check of the section shape and key slot shape as well as check of the position of the axis of symmetry of the key slot in relation to the shaft and cone axis;

.7 check of the assembly and observance of the coaxiality when mating shafts, interferences and clearances in the joints;

.8 external examination of the shafts to detect likely surface defects.

6.2.3 After heat treatment, the propeller shaft forgings shall be generally subjected to ultrasonic testing. On agreement with the Register, the ultrasonic testing may be performed at any stage of the shaft manufacture.

The materials on the ultrasonic shaft test shall contain an appraisal of the test results.

6.2.4 The dimensions and cylindrical shaft surface shape errors shall be checked in two mutually perpendicular directions and in several sections along the length of the shaft portion to be checked. The number of sections shall be sufficient for precise determination of the dimensions and the shape of the shaft portion to be checked, but not less than two. Ovality in any section of the journal for bearings and conicity measured over the bearing length shall not exceed 50 per cent of the tolerance for the shaft journal diameter, unless the working drawings instruct otherwise.

6.2.5 The radial run-out shall be checked with the shafts slowly rotating.

The radial run-out of journals, cones and inoperative portions of the shafts whose journals rotate with peripheral velocity less than 10 m/s shall not exceed the values given in Table 6.2.5.

Where floating prisms capable of moving in a horizontal plane under the action of a bent shaft are used as the supports, the tolerances for the radial run-out are increased by 1,5 times.

The value of the limiting radial run-out shall be obtained by multiplying the values given in Table 6.2.5 by twice the distance, m, to the nearest end extremity of the shaft.

For the propeller shafts hardened by rolling-down, the radial run-out of the cone for the propeller with key shall not exceed the values accepted for the inoperative shaft portions.

Table 6.2.5

Shaft length to diameter ratio	Radial run-out of shafts, mm, with the check applied to		
	journals and cones at centres		inoperative lengths at centres and on supports
	on supports	per 1 m of length	
Above 5 up to 20	0,04	0,04	0,073
Above 20 up to 25	0,05	0,06	0,08
Above 25 up to 30	0,055	0,08	0,087
Above 30 up to 40	0,06	0,09	0,093
Above 40 up to 50	0,07	0,12	0,10

6.2.6 The axial run-out of the connecting flange surfaces, half-couplings or working surfaces of the thrust shaft collar shall be checked during rotation of the shaft mounted at the centres and on supports. The permissible axial run-out of the connecting surfaces as well as the thrust shaft collar surfaces shall not exceed: for shafts with the flange (collar) diameter up to 500 mm – 0,03 mm; over 500 and up to 800 mm – 0,04 mm and over 800 mm – 0,05 mm.

6.2.7 Non-plane nature of the connecting flange surfaces or of the working surfaces of the thrust shaft collar shall be checked by the straight-edge. Lack of convexity on the surface checked shall be checked by blue test with the use of the straight-edge. When the straight-edge is positioned in the centre plane or along the largest chord (in case of the collar checking), the non-blued spot may be only in the centre part of the area checked.

6.2.8 The conicity and rectilinearity of the generatrix of the conical shaft surfaces shall be checked by taper measuring rules whose length shall be not less than 0,7 the cone length. The rectilinearity of the generatrix can be checked by the straight-edge, and the total length of the blued surface (in percents of the cone length) for cones of 80 – 2000 mm in length shall be within 90 – 40 per cent (the specific values shall be determined by linear in-terpolation). Taper gauges may be used for blue test. In such case, the blue shall be uniformly distributed over the entire surface and have the total area (in percents of the conical surface area) within 90 to 40 per cent for cones of 80 to 2000 mm in length (the specific value shall be determined by linear interpolation). Absence of the blue spots at the cone ends shall not be permitted. Scraping of the conical shaft surfaces shall not be permitted.

6.2.9 The methods of inspecting the key slots shall be established by the manufacturer depending on the adopted manufacturing processes and inspection means. The fit of the key mounted to the side surfaces of the key slot shall be checked by a feeler gauge, and the total clearance shall be within the tolerance for the key slot width.

6.2.10 The propeller shaft portions for fitting liners shall include tolerances for interference fit stipulated by the technical documentation. The portions may be treated for fitting according to the actual dimensions of the liner openings with the nature of such fitting fastening being observed.

6.2.11 Upon the finalization of machining, the propeller shafts are recommended to be subjected to superficial hardening by rolling-down. The hardening shall be carried out in way of the cone for the propeller boss, in way of the after flange including 1/3 of the fillet arc length and under the ends of each liner. The length of the portion to be hardened on the cone shall be half as great as the shaft diameter at the place of hardening, and in the remainder of the shaft portions – one shaft diameter.

6.2.12 Upon the final treatment of the cone opening and key slot, the flanged half-couplings shall be fitted on the shaft and finished over the external diameters, connecting ends and centering grooves. The axial run-out in such a case shall not exceed the values given in 6.2.6 and the radial run-out – the values for the flanges given in 6.2.13.

6.2.13 The finally assembled, during mating, ship's shafts shall be aligned. When checking two assembled adjacent shafts at the centres on a bed with supports, the radial run-out of the journals shall meet the requirements of 6.2.5 (for a shaft of the total length) and the radial run-out of the flanges with diameters of 200 to 800 mm and over – 0,03 to 0,05 mm (the specific value shall be determined by linear interpolation).

When mating shafts without working journals, the run-out shall be checked over the external surfaces of the flanges. When mating shafts with the use of centering disks, the shafts shall be mounted relative to each other in such a manner that the axial run-out of the connecting surfaces gives rise to minimum break of the common axis of the shafts connected.

If there is a special instruction in the technical documentation, the flanges of the assembled shafts or half-couplings shall be machined to the same external diameter. Based on the results of coaxiality check, the relative position of the shafts shall be marked suitably on the flanges.

6.2.14 The bolted joints of the shaft flanges shall be such as to ensure the fit stipulated by the technical documentation. The holes for the bolts shall be finished jointly for the both flanges of adjacent shafts. Upon finishing, not more than one annular mark up to 1 mm in width and up to 0,3 mm in depth shall be accepted over the hole surface length of 15 mm.

6.2.15 Connection of the shafts with the use of flanged (key, keyless) and box couplings shall be effected with an assured interference fit by hydropress method. Keyless couplings including couplings with cylindrical connections may be fitted on shafts up to 200 mm in diameter using the heat method. Fitting of the couplings on shafts using hydropress method shall be effected according the design fitting parameters (force of mounting components in initial position, axial displacement, pressure of oil feed to the mated conical surfaces, force of the final press fit) and permissible deviations therefrom. In case of the heat method of fitting, the half-coupling heating temperature and axial displacement shall be assumed as the design parameters.

The axial displacement shall be reckoned from the initial position which shall be determined during hydro-press fitting for each half-coupling separately. For this purpose, it is necessary to make the half-coupling a pressfit (without oil supply) on the shaft by steps (not less than 8 to 10 steps). In so doing, axial displacements and forces shall be recorded at each step. Based on the data obtained, a graph showing the relationship between the half-coupling displacement and pressfit force shall be constructed (refer to Fig. 6.2.15).

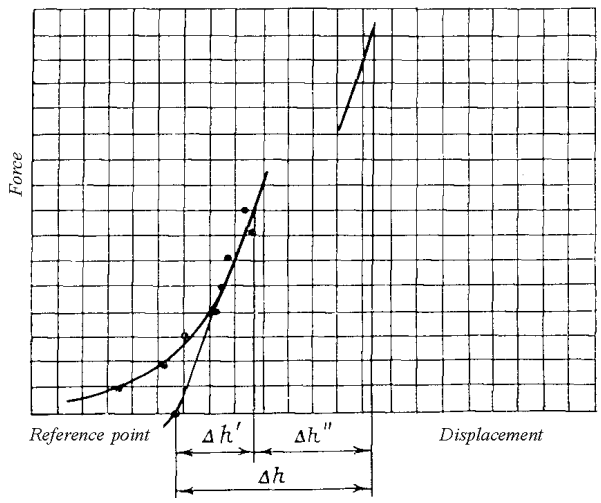

Fig. 6.2.15

After a portion of the straight line has been determined on the graph, it shall be extended to the intersection with the "displacement" axis. The point of intersection of the straight with the "displacement" axis is the reference point from which the axial diaplacemnt shall be reckoned.

The final pressfit shall be effected bty the hydro-press method starting from the half-coupling position recorded during the determination of the reference point untial the axial displacement determined by the following formula is achieved:

$$\Delta h'' = \Delta h - \Delta h', \qquad (6.2.15)$$

where Δh – required half-coupling displacement;
$\Delta h'$ – half-coupling displacement from the reference point to final position recorded when the reference point has been determined.

The following deviations of the fitting parameters are permitted: axial displacement – from –2 up to +8 per cent; axial force during mounting an enveloping component in the initial position – from –5 up to +10 per cent; half-coupling heating temperature – from −5 up to +20 °C.

6.2.16 The finished shafts shall be subjected to the external examination. No lamination, cracks, black spots, backfins, rags, flowers, slag inclusions, sand marks, crazes, burrs and scratches shall be permitted on the shafts. The results of the shaft checks including the flaw detection results as well as the results of the measurements made shall be entered in the measurement tables (shaftline certificate, reports). Where the results of the checks, flaw detection and measurements are positive, the Register certificate issued.

6.3 PROPELLER SHAFT LINERS

6.3.1 The finished liners including the water-proof coatings of the propeller shafts shall comply with the requirements of the technical documentation and of this Chapter.

6.3.2 The following checks, verifications and tests shall be performed during and upon the manufacture of the liners:

.1 check for compliance of the material quality with the requirements of the technical documentation;

.2 flaw detection;

.3 external examination of the liner before being shrunk on the shaft and after being finished on the shaft;

.4 verification of the dimensions providing an assured interference fit on the shaft;

.5 test of the liners for tightness before being shrunk on the shaft and of the built-up liners being welded on the shaft;

.6 check of the built-up liner joints;

.7 verification of the dimensions, shape and quality of the treated surfaces of the journals for stern bearings after finishing of the liners shrunk on the shaft;

.8 check for radial run-out of the finished liners on the shaft.

6.3.3 The liners shall be shrunk on the shaft in such a way as to provide interference fit. Attachment of the liners to the shaft by blunt bolts or other means, as well as sealing of the liner ends with the use of soldering, glueing up and similar methods shall not be permitted.

6.3.4 The treated liners or shells for the welded liners, before being shrunk on the propeller shaft, shall be subjected to the hydraulic test for tightness by a pressure of 0,2 MPa. The welds and adjacent zone (40 mm in width) of the liners welded outside the shaft, before the hydraulic tests for tightness, shall be subjected to the visual testing, X-ray or gamma-ray testing. The welds and adjacent zone (40 mm in width) of the liners welded outside the shaft, before the hydraulic tests for tightness, shall be subjected to the visual testing and measuring, X-ray or gamma-ray testing.

6.3.5 The liner shrunk on the propeller shaft shall be subjected to the finishing, whereupon the roughness of the working surfaces, dimensions and shape errors of the liner cylindrical surfaces (ovality and conicity) as well as the radial run-out by the working journals for the stern bearings and gland seals as specified in 6.2.4 to 6.2.5 shall be checked. The finished external surfaces of the liners shall be checked visually for the absence of defects. In questionable cases, dye penetrant testing or local etching shall be carried out with subsequent examination of the portion etched with the use of a magnifying glass.

6.3.6 The finished surfaces of the liners and the welds of the joined liners shall be free of defects affecting the proper performance of the stern tube.

Individual portions of fine porosity of not more than 50 mm^2 in area and individual gas cavities which diameter and depth do not exceed 3 mm in the number of not more than three per square decimetre may be permitted on the surfaces of the finished liners provided that the water-tightness is ensured. The total area of the said defects shall not exceed 1 per cent of the entire external surface of the liner. Fine porosity which does not affect the watertightness may be permitted on the internal surface of the liners or shells after treatment and fitting on the propeller shaft. The total area of such porosity shall not exceed 3 per cent of the internal surface area.

The following defects may be permitted in the welds of the joined liners: individual blow-holes up to 3 mm in size and slag inclusions up to 5 mm length; chains of blow-holes up to 3 mm in length and non- continuous slag inclusions up to 5 mm in length and extending for not more than 20 per cent of the weld portion length inspected by radiograph; local accumulations of non-continuous blow-holes up to 3 mm in size and slag inclusions up to 4 mm on the weld portion not more than 20 mm in length. The total extension of all defects

shall not exceed 20 per cent of the weld length inspected by radiograph. Individual cavities of 1 to 1,5 mm in size and up to 1 mm in depth, spaced at 10 to 15 mm may be permitted on the finished surface of the liner weld. The total number of such cavities shall not exceed five. Other defects not mentioned above shall be corrected. Their improvement procedure shall be agreed with the Register.

6.3.7 The shaft portions between the liners shall be protected by waterproof insulation. The waterproof insulation shall be smooth, even, free of sags, bulges, air inclusions. The external surface of the insulation shall be inspected visually. Check of the internal defects in the waterproof insulation and the defects between the shaft surface and insulation shall be carried out by methods approved by the Register. The portions of the waterproof insulation at the distance of 0,4 m but not more than the shaft diameter from the liner ends shall be inspected completely; the remaining portions – at random. The area of the portions to be inspected at random shall be not less than 20 per cent of the total area of the waterproof insulation.

6.4 CONNECTING BOLTS AND SHAFT COUPLINGS

6.4.1 During and upon completion of the manufacture of the couplings, it is necessary to carry out:

.1 check of the material quality and construction for the compliance with the requirements of the technical documentation;

.2 check of the dimensions providing the required fitting of the coupling on the shaft, and the bolts in flanged joints of the shaftline;

.3 check of the key slot geometry and the position of the key slot in relation to the coupling axis;

.4 check of the radial and axial run-out of the finished couplings;

.5 external examination of the couplings.

6.4.2 The bolts shall be manufactured according to the technical documentation approved by the Register.

6.4.3 The conical surfaces of couplings mated with the shafts shall be clean and rectilinear; ovality of the conical opening section shall not exceed 50 per cent of the tolerance value adopted for the cone base diameter. Check of the conical surfaces shall be carried out in accordance with the requirements of 6.2.8. Check of the key slots and key fitting shall be carried out in accordance with the requirements of 6.2.9. Besides, the conical openings of the flange half-couplings shall be checked by fitting thereof on the cone of the mated shaft with the use of blueing. Check with the use of a taper gauge-plug shall be also permitted. During the check, the number of blue spots over the area of 25×25 mm shall be from one to five for the cones of 80 to 320 mm in length (the intermediate values shall be determined by linear interpolation). Where the cone length exceeds 320 mm, the number of blue spots on the same area shall be not less than 1.

6.4.4 Finishing and check of the flange half-couplings by the external cylindrical and end surfaces shall be performed with the half-couplings fitted on the shaft as required by 6.2.6, 6.2.12 to 6.2.13. The position of the half-couplings on the shafts and relative to each other shall be suitably marked.

6.4.5 The finished couplings shall be subjected to external examination. The results of the checks and measurements made shall be entered in tables (report, certificate).

6.4.6 The technical supervision during the manufacture of flexible, disengaging and sound-proofing couplings shall be in compliance with the requirements of the approved documents.

6.5 THRUST AND JOURNAL BEARINGS

6.5.1 The finished bearings shall comply with the requirements of the technical documentation approved by the Register.

6.6 STERN TUBE ARRANGEMENT

6.6.1 The finished tubes, bushes and stern bearings including strut bearings shall comply with the requirements of the technical documentation approved by the Register.

6.7 STERN TUBE SEALS AND GLANDS

6.7.1 The finished oil lubricated seals and water lubricated glands of the stern tube shall comply with the requirements of the technical documentation approved by the Register.

7 PROPELLERS

7.1 GENERAL

7.1.1 The provisions of this Section apply during the technical supervision of propellers, their assemblies and components listed in the RS Nomenclature.

7.1.2 The Section sets forth the procedure of the technical supervision during the manufacture of the above-mentioned supervised items at the manufacturer's.

7.1.3 General provisions for the arrangement of the technical supervision during the manufacture of the cited items are given in Part I "General Regulations for Technical Supervision" and those for the technical documentation – in Part II "Technical Documentation".

7.1.4 The procedure and scope of the surveys and tests of the supervised items during their manufacture and installation at the firm (manufacturer) are defined from the list (refer to 12.2, Part I "General Regulations for Technical Supervision") drawn up by the firm (manufacturer) and approved by the RS Branch Office on the basis of the RS Nomenclature and also the requirements of Table 7.1.4.

Table 7.1.4

Nos.	Item of technical supervision	Verification of technical documents	External examination	Verification of geometrical dimensions	Flaw detection	Balancing	Hydraulic tests, check for tightness	Bench tests	Inspection
1	Fixed pitch propellers (FPP):	+	+	+	+	+			
1.1	bosses	+	+	+	+				
1.2	blades	+	+	+	+				
2	Controllable pitch propellers (CPP) and supporting systems:	+	+	+		+	+	+	+
2.1	bosses	+	+	+	+				
2.2	blades	+	+	+	+				
2.3	hydraulic cylinders and pitch control unit shafts, servo motors in boss	+	+	+			+		
2.4	CPP components: slider blocks, push-pull rods, washers	+	+	+	+				
2.5	CPP control systems	+	+				+		
3	Vertical axis propellers	+	+	+			+	+	+
4	Steerable propellers	+	+	+			+	+	+

When drawing up the list, account shall be taken of the peculiarities of the manufacturing process adopted at the firm (manufacturer).

7.1.5 Technical supervision during the manufacture of the propellers, their assemblies and components shall be performed in accordance with the requirements of Table 7.1.4, list and the RS Nomenclature.

7.1.6 The manufacture of the propellers, their assemblies and components and the manufacturing operations shall be performed under the technical supervision of the Register according to the technical documentation approved by the Register and listed in Part I "Classification" of the Rules for the Classification and Construction of Sea-Going Ships, as applied to the propellers.

The construction of the propellers and components thereof shall comply with the approved technical documentation and meet the requirements of Part VII "Machinery Installations" of the Rules for the Classification and Construction of Sea-Going Ships.

7.1.7 Forgings, castings and other blanks used for the manufacture and building-up of the propellers, shall have documents confirming their compliance with the approved technical documentation according to the technical supervision form stipulated by the RS Nomenclature.

Where the forgings, castings and other articles come without the Register documents, they shall be surveyed for the compliance with the approved documents, the feasibility of using them shall be agreed with the Register.

7.1.8 When finished components are delivered to a firm from a supplier, check shall be carried out for availability of the documents according to the RS Nomenclature and technical supervision form. During the external examination of the propellers and their components, the following shall be checked: compliance of the documents with the adopted supervision form, measurement cards, absence of defects.

7.1.9 Forgings, castings and other blanks of propellers shall be subjected to flaw detection by non-destructive methods in accordance with the requirements of the approved technical documentation.

7.1.10 Faulty portions corrected by welding and straightening shall be subjected, as a rule, to mandatory non-destructive inspection.

In particular cases, the inspection method shall be specified at the Register discretion.

7.1.11 After being finished, the propeller components shall have no surface and internal defects: cracks, cavities, slag inclusions, etc. The defects shall be corrected according to the practice adopted by the firm (manufacturer). The ratings of the defects allowed to be corrected as well as the ratings of the defects allowed to be uncorrected, which occur on the finished propellers, bosses and blades are stated in the technical documentation approved by the Register, having regard to 4.2 of Part XIII "Materials" of the Rules for the Classification and Construction of Sea-Going Ships for propellers made of copper alloys (refer also to Appendix 1) and to 3.12 of Part XIII "Materials" of the Rules for the Classification and Construction of Sea-Going Ships for steel propellers.

If the nature of defects and the method for correcting them do not comply with those stated in the approved documents, they shall be agreed with the Register.

7.1.12 Fastening parts (bolts, studs and pins) shall be manufactured in accordance with the technical documentation approved by the Register.

7.1.13 Fitting of the boss cone opening shall be checked against a gauge or shaft. The fitting quality shall be defined by the number of spots per the unitary area of the boss cone opening (not less than two over an area of 25×25 mm, unless the technical documentation for the propeller instructs otherwise).

7.1.14 After being machined and completely assembled, the FPP and CPP shall be checked for static balancing by a test load in conformity with the guidelines of the drawings, according to the Register standard (refer to 6.4, Part VII "Machinery Installations" of the Rules for the Classification and Construction of Sea-Going Ships). In case of the detachable-blade propellers, check shall be carried out of the difference in mass between the regular and spare detachable blades according to the guidelines of the drawings.

7.1.15 Each propeller, except for the FPP, shall be tested on bench in accordance with a program approved by the Register.

7.1.16 Prior to the bench tests, mounting, alignment, clearances, contact in the components matched shall be checked, and the hydraulic tests and other inspection types carried out in accordance with the guidelines of the approved technical documentation.

7.1.17 Propellers undergone running-in according to the manufacturer's program and accepted by the inspection body shall be permitted for the bench tests.

7.1.18 Prior to the bench tests of the propeller, the following documents shall be submitted to the Surveyor to the Register:

.1 propeller record book or certificate filled in by as-built data (measurements of components, clearances, alignment, hydraulic tests, balancing, etc.);

.2 specifications, working drawings and test program approved by the Register;

.3 bench certificate or report of bench acceptance by the inspection bodies of the firm (manufacturer) with the supporting system diagrams;

.4 certificates on the materials of the main propeller components and related equipment or other documents confirming technical supervision by the Register during the manufacture;

.5 flaw detection report.

7.1.19 Bench tests shall be carried out with regular equipment and shall be as close as possible to the shipboard conditions. Deviations from these requirements shall be agreed with the Register.

7.1.20 Upon completion of the bench tests, the propeller assemblies shall be inspected in knock-down form.

The scope of the inspection shall be determined on the basis of the bench tests and agreed upon with the Surveyor to the Register.

7.1.21 The technical supervision during the manufacture of the hydraulic motors and pumps, piping and fittings, propeller automation equipment shall be performed in accordance with Sections 5, 8 and 12.

7.1.22 When the results of the survey and test are satisfactory, the Register certificate is issued.

7.2 FIXED-PITCH PROPELLERS

7.2.1 General provisions concerning the technical supervision during the manufacture of the propellers are set forth in 7.1.

7.2.2 After the machining of the propeller, the documents of the inspection body with measurements of the geometric dimensions as well as measurements of the blade thicknesses at a radius equal to 0,6 the propeller radius and at the blade tip edges shall be submitted to the surveyor to the Register.

7.2.3 When a finished propeller is presented, the Surveyor shall check:

.1 static balancing;

.2 key way position and dimensions;

.3 fitting of the cone opening of the boss (if the propeller shaft or gauge is available).

During the external examination, particular attention shall be given to the roughness of the key way on side planes and cone opening of the boss.

7.2.4 The cone opening of the boss and key way may be machined with an allowance for complete fitting, which shall be stated in the documents issued.

7.2.5 When blades are fitted into the boss with a guaranteed interference ("cold"), the position of the blade in the boss shall be checked by the blade pitch with a tolerance stated in the drawings.

7.2.6 Regular and spare detachable blades shall be checked for interchangeability.

7.2.7 In the process of technical supervision during the manufacture of plastic propellers the following shall be taken as a guide:

.1 the documentation for the manufacture of plastic propellers shall be subject to the consideration by the Register;

.2 the propeller blades shall be selectively subjected to strength tests by a concentrated static load until dead break. The breaking static load Q_{br}, in N, shall be determined from the formula

$$Q_{br} \geq K_f R_b, \qquad (7.2.7.2)$$

where K_f = safety factor equal to:
6 = for passenger and transport ships;
7 = for towing and fishing ships;
$R_b = \sqrt{P_b^2 + T_b^2}$ = resultant of hydraulic forces on the blade under operating conditions, in N;
$P_b = P/z$ = blade thrust, in N;
$T_b = M/(0.65Rz)$ = centrifugal force on blade, in N;
$M = 9550N/n$ = shaft torque, in N·m;
N = propeller power, in kW;
z = number of blades;
n = speed, in min^{-1};
R = propeller radius, in m.

N o t e s: 1. The load is applied perpendicularly to the section chord at the radius $r = 0{,}65R$ at the point of intersection thereof with the blade centre line.

2. The formula is applicable for the detachable-blade propellers made of glass reinforced plastic up to 2 m in diameter.

3. The static breaking load Q_{br} for the propellers with a diameter over 2 m shall be subject to consideration in each particular case.

.3 each batch of the moulded material shall have the manufacturer's document with indication of the component composition and mechanical properties:

tensile strength, compression strength, static bending strength;

impact strength and modulus of elasticity;

.4 during the external examination, the quality of the manufactured propellers and blades shall be checked. There shall not be explicit whitening and blackening (indication of burning), cracks, cavities, laminations, waviness, folds, warping, etc. The allowable defects on the propellers and blades, their number and size shall be stated in the specifications or other approved documentation.

7.3 CONTROLLABLE-PITCH PROPELLERS AND THEIR SUPPORTING SYSTEMS

7.3.1 General provisions concerning technical supervision during the manufacture and tests of the propellers at the firm (manufacturer) are set forth in 7.1.

7.3.2 The manufacture of the pitch control unit, piston, push-pull rod, hydraulic cylinder, pipes to supply oil to the boss, sliding shoes and other essential components of the CPP as well as the systems serving the CPP shall be performed in accordance with the requirements of the technical documentation approved by the Register.

7.3.3 Working spaces of the hydraulic cylinder shall be tested by hydraulic pressure indicated in the working drawings.

7.3.4 When assembling the CPP and its units in accordance with the guidelines of the drawings, the following shall be checked:

.1 clearances in the blade bearings, blade driving mechanisms, oil boxes and oil transfer blocks, actuators, hydraulic boosters, etc.;

.2 tightening and locking torques of the coupling bolts, studs or bolts for fastening thrust washers, blades and pitch control unit to the propeller shaft, nut of the propeller shaft half-coupling, hydraulic cylinder fastening, etc.;

.3 alignment of the piston, rod or the pipes to supply oil to the piston in the boss.

7.3.5 The requirements put forth in 7.2.2, 7.2.3 and 7.2.6 cover also the finished propellers.

7.3.6 Upon finalisation of all assembly operations, the CPP shall be subjected to bench tests according to the program approved by the Register.

7.3.6.1 Prior to testing under load, "zero position", agreement in indications of the pointers of the remote pitch indicators and mechanical pitch indictor, actuators and feedback mechanisms shall be checked. The indications shall be read over the entire range of the blade turning-over from "full ahead" to "full astern" positions and back.

The agreement in indications of the pointers of the remote pitch indicator and mechanical pitch indicator shall be also checked at the rated speed.

7.3.6.1.1 During the bench tests of the non-rotating shaftline ,the following shall be checked:

tightness of connection between the CPP and pipelines in accordance with the requirements of the technical documentation approved by the Register. During the test, the piston shall be sequentially moved to the fore and aft stops. No oil leaks shall be permitted;

safety devices which preclude the excess of the design pressure in the hydraulic system;

range of the blade turning;

lubricating oil pressure in the boss when the blades are turned over from "full ahead" to "full astern" positions and back;

operation of the local and remote control;

turning-over of the blades from "full ahead" to "full astern" positions and back, for which purpose the blades shall be turned over to both positions four times. Blades shall be turned over without jamming and additional efforts, the value of which shall be monitored by oil pressure in the hydraulic system and time of turning-over;

emergency locking of the blades in the ahead position.

7.3.6.1.2 During the bench tests of the rotating shaftline, the following shall be checked:

oil pressure in the hydraulic system which ensures reliable turning-over of the blades from "full ahead" to "full astern" positions and back, with measurements of time during operation of each pump, for which purpose the blades shall be turned over to both positions four times at the rated speed of the propeller shaft;

agreement in the positions of the control desk levers with those of the remote and local pitch indicators. The indications shall be read from the scale of the manoeuvring lever over

the entire range of turning-over from "full ahead" to "full astern" positions and back. For the CPP with pneumatic and pneumo-hydraulic control, air and oil pressures in the control system and actuators and feed-back mechanisms shall be measured;

turning-on of the stand-by power supply unit of the hydraulic system when failure of the main power supply unit is simulated;

minimum oil pressure in the hydraulic system which ensures reliable turning-over of the blades;

blade turning-over to ahead position with simulation of failure of the CPP power hydraulic system or loss of power of the electric oil pumps of the power system as well as when remote control system fails or when there is a possibility of emergency setting and locking the blades in ahead position.

7.3.7 Bench tests of the CPP prototypes of fundamentally new designs shall be conducted with loading devices instead of regular blades. These devices shall provide not less than 110 per cent of the design load on the main blade turning parts.

The construction and calculations of the loading devices shall be presented to the Register for information.

The CPP with the loading devices, in case of stable production, shall be agreed with the Register.

7.4 VERTICAL AXIS PROPELLERS

7.4.1 General provisions concerning the technical supervision during the manufacture and tests of the vertical axis propellers (VAP) at the firm (manufacturer) are set forth in 7.1.

7.4.2 When manufacturing and assembling the components and assemblies of the VAP, the following shall be checked:

.1 side clearances and contact patches in the reduction gears, axial and radial clearings in the bearings of the rotor and driving shafts, axial clearances in the support plates, in the vane thrust bearings;

.2 proper assembling and kinematics characteristics of the vane driving mechanisms;

.3 static balancing of the driving shafts in assembly with couplings and assembled rotors.

7.4.3 During the bench tests of the VAP, the following shall be obligatorily checked:

.1 with the non-rotating rotor:

tightness of the rotor and VAP housing seals;

tightness of the space outside rotor by the external hydraulic pressure with disconnected oil affluent system;

operation of the alarm, protection systems and the automatic devices;

.2 with the rotating rotor:

starting properties of the VAP by thrice-repeated starting with putting to the operating mode being checked;

operation of the automatic control by thrice-repeated shifting of the control lever from "full ahead" position to "full astern" position and back and from "starboard" position to "port" position and back;

reset of the control lever from all extreme positions "full ahead", "full astern", "starboard", "port" with the engine shut down;

operation of the remote control system and propeller controls with the vanes being turned over three times from the "full ahead" position to "full astern" position and back as well as from "starboard" position to "port" position and back;

accuracy in setting the eccentricity by thrice-repeated turning-over the vanes from "stop" position to each extreme position "full ahead", "full astern", "starboard", "port" and back.

Under the conditions of rated speed and maximum needle lift the vanes shall be turned over ten times from "full ahead" to "full astern" position and back, from "starboard" to "port" position and back.

7.5 STEERABLE PROPELLERS

7.5.1 General provisions concerning the technical supervision during the manufacture and testing of the steerable propellers at the firm (manufacturer) are set forth in 7.1.

7.5.2 Propellers, pinions of the upper reduction gears (if any) and couplings shall be statically balanced.

7.5.3 When manufacturing the components and assemblies of the steerable propellers, the following shall be checked:

.1 side clearances and contact patches in the reduction gears;

.2 axial and radial clearances in the bearings of the reduction gear shafts;

.3 lifting, turning and blocking mechanisms;

.4 clearances between propeller and nozzle in assembly (in case of the nozzled propeller installation).

7.5.4 During the bench tests of the steerable propellers, the following shall be obligatorily checked:

.1 with the non-rotating propeller:

tightness of the lower reduction gear at static oil affluent;

operation of the lowering, lifting and turning mechanisms;

.2 with the rotating propeller:

starting properties of the steerable propeller under local and remote control; lifting, lowering and turning of the steerable propeller;

compliance of all parameters and characteristics with the approved documentation.

7.5.5 Bench tests shall be carried out according to the program approved by the Register having regard to the scope of bench tests of the steerable propellers (refer to Appendix 2).

APPENDIX 1

INSTRUCTION FOR CORRECTING DEFECTS OF PROPELLERS MADE OF COPPER ALLOYS

1. General.

1.1 This Instruction establishes methods to correct defects of the FPP and CPP made of copper alloys.

1.2 The Instruction is intended for rectifying defects of the propellers detected in the process of manufacture (refer also to 4.2, Part XIII "Materials" of the Rules for the Classification and Construction of Sea-Going Ships) and repair in operation thereof (refer also to 11.2 of the Methodical Recommendations on Repair of Sea-Going Ships).

1.3 When developing technological processes for repairing the propellers, consideration shall be given to:

propeller material, its mechanical characteristics and weldability;

results of survey including non-destructive testing;

position and mode of the defect or damage;

blade dimensions and safety factors.

2. Methods of exposing defects.

2.1 Defects located in the zone *A* (refer to Fig. 2.1) as well as in areas where porosity can be expected, shall be exposed visually and by the non-destructive testing approved by the Register.

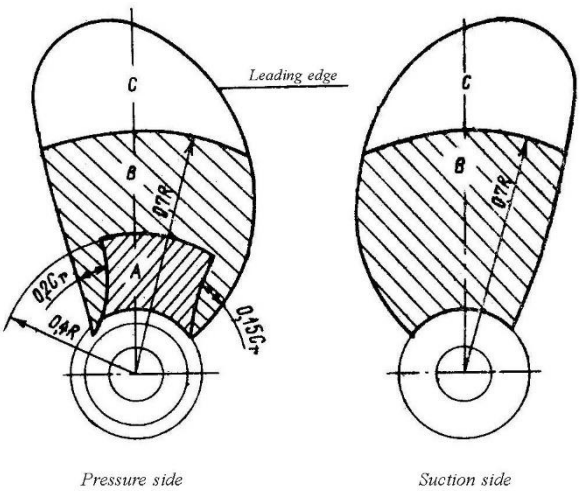

Fig. 2.1
Subdivision of the blade surface into zones:
R – propeller radius; C_r – chord length on radius

2.2 Roentgenography shall be used if the blade thickness does not exceed 160 mm.

2.3 Ultrasonic testing may be used for the propellers made of CU3 and CU4 type copper alloys (refer to Tables 4.2.2 and 4.2.3, Part XIII "Materials" of the Rules for the Classification and Construction of Sea-Going Ships).

3. Correction of defects by mechanical methods.

3.1 Minor defects (porosity, pitting, oxide spots, etc) may be corrected by mechanical method with subsequent grinding. In this case, the transition from the defect correction area to the propeller blade shall be smooth.

3.2 Cold straightening of a bent blade may be performed only in cases where slight deflection of the blade edge up to 20° with the blade thickness at the bent portion not more than 20 mm.

3.3 Cold straightening of the blades with impact loads applied shall not be permitted.

3.4 Upon finalisation of the straightening of the propellers made of CU1, CU2 and CU4 type copper alloys (refer to Tables 4.2.2 and 4.2.3, Part XIII "Materials" of the Rules for the Classification and Construction of Sea-Going Ships), the propellers shall be annealed at the temperatures indicated in Table 3.4.

Table 3.4

Propeller alloy type	Temperature, in ˚C		
	Preheating	Annealing	Hot straightening
CU1	150 – 250	350 – 550	500 – 800
CU2	150 – 250	350 – 550	500 – 800
CU3	50 – 150	Not recommended	750 – 950
CU4	50 – 250	450 – 600	775 – 875

3.5 As a rule, before the blade straightening operation, the repaired place and surrounding area of 500 mm in width shall be heated. The recommended preheating temperatures are given in Table 3.4.

3.6 Preheating shall be gradual and uniform. No use of an oxyacetylene or oxypropane flame shall be permitted. An electric heating is recommended to be used.

3.7 During the hot straightening, the temperature shall be maintained within the range specified in Table 3.4 and be the same through the entire blade thickness.

The temperature is recommended to be monitored by contact or radiation thermometers and by thermopencil.

3.8 Upon finalisation of the hot straightening of the blades, the propeller shall be allowed to cool down slowly. Whilst so doing, the propeller blades are recommended to be covered by flame-proof heat insulating materials.

3.9 Upon correcting defects, the corrected portions shall be subjected to visual testing as well as dye penetrant or fluorescent testing.

4. Correction of defects by welding.

4.1 Welding shall be used for correcting such propeller defects which cannot be rectified by mechanical method.

Use of welding for correction of minor surface defects shall be avoided.

4.2 The peculiarities of correcting the propeller defects by welding shall be specified depending on the area (zone) of location thereof and the extent to which the defects affect the strength characteristics of the propeller. The entire propeller surface shall be divided into zones *A, B* and *C* (refer to Fig. 2.1).

4.3 The defects in zone A shall not be corrected by welding, as a rule. Each case of defect correction shall be subject to the agreement with the Register.

4.4 Correction of the defects in zone *B* by welding may be permitted following a technological process approved by the Register for a particular propeller.

4.5 The defects in zone *C* may be corrected by welding following typical technological processes of the propeller repair approved by the Register and under its technical supervision.

4.6 Weld preparation area shall be of smooth contour without acute and right angles, abrupt projections and hollows and shall be also thoroughly ground and dried.

Before being chipped out, the ends of non-through cracks shall be treated with a drill from 8 to 12 mm in diameter to a depth by 2 – 3 mm more that that to which the crack has propagated. The ends of the through cracks shall be drilled up all the way through.

4.7 During welding, the propeller blade shall be in horizontal position.

4.8 Correction of the defects by welding shall be performed by a welder of certified qualification.

4.9 It is recommended to use electrodes with special coating or to conduct gas-shielded welding operations by a method approved by the Register. Coated electrodes shall be heated before welding to a temperature recommended by the firm (manufacturer) thereof.

The defects in zone *C* may be corrected by gas welding.

4.10 When welding with preheating is used, it is recommended not to exceed the preheating temperatures, given in Table 3.4.

4.11 It is recommended to conduct welding operations slowly to avoid welding strains and development of cracks. Before the next weld is made, it is necessary to remove thoroughly the slag and possible contamination from the weld already made.

4.12 Upon correcting the defects by welding, heat treatment shall be carried out in accordance with the requirements of the technical documentation approved by the Register and of Table 3.4.

4.13 After correction of defects and finishing of the weld or deposit surface, the adjacent heat-affected zone shall be checked both prior to heat treatment and thereafter. The check shall include visual testing as well as dye penetrant or fluorescent testing.

Should the need arise, the Surveyor may require balancing of the propeller.

APPENDIX 2

REQUIREMENTS TO THE SCOPE OF BENCH TESTS OF STEERABLE PROPELLERS

1. The tests of the upper and lower reduction gears under the action of torque rating for examining the contact patches in the reduction gears. The torque rating is the torque which is provided by the driving motor at the rated power. The tests are carried out with the assembled steerable propeller or separately for the upper and lower reduction gears provided that the required torque is applied. The photos of the contact patches of each gear pair shall be attached to the Test Protocol together with the conclusion of the steerable propeller manufacturer regarding the acceptability of the tested reduction gear contact patch in comparison with the reference one in accordance with the manufacturer requirements. The side clearances and contact patches in reduction gears are subject to the checking and agreement with the Register.

2. The steerable propellers are tested in unloaded condition with phased increase of the propeller shaft rotational speed within the range of from the minimum stable to the rated value. Each phase duration shall be at least 15 min, and there shall be at least four such phases. At each stage the test, temperatures of oil and shaft bearings of the propeller shaft drive are recorded. The temperature stabilization is monitored. The test at the rated rotational speed only is admitted.

3. The tests carried out in accordance with items 1 and 2 may be combined if one steerable propeller is tested with the use of load device or with the propeller, and also where two steerable propellers of the same type are tested according to "back to back" scheme.

4. Checking of turning and reverse motion mechanism of the steerable propeller.

4.1 Simultaneously with the transfer of rotation to the propeller shaft, the fixing of the steerable propeller position angle is checked. During this check, the deviation of the actual position angle from the set position angle is recorded. The check is performed when steering is effected from local and remote steering positions for four angle positions of the steerable propeller ("full ahead/starboard/full astern/port").

4.2 The reverse time is checked by turning the steerable propeller 180°. The test result shall satisfy the requirements of 7.2 of Part VII "Machinery Installations" of the Rules for the Classification and Construction of Sea-Going Ships.

4.3 Where it is impractical to carry out bench tests in the premises of the manufacturer in accordance with 4.1 and 4.2 on high-power steerable propellers, possibility of carrying out such tests on the assembled upper reduction gear may be considered. Otherwise, such tests shall be transferred to the ship, and the corresponding note about this transfer is made in the RS Certificate (form 6.5.30/6.5.31) issued for the steerable propeller.

5. If the steerable propeller design provides for the in-built brake arrangement, preventing the free rotation of the propeller shaft when the steerable propeller is out of action, tests shall be made of this arrangement operation.

6. A triple check of the actuation of the in-built clutch disconnecting the steerable propeller from its drive motor shall be performed.

7. Where a controllable pitch propeller is used in the steerable propeller, tests shall be made on the former, as well as on its servicing systems in accordance with the applicable requirements of 7.3.

8. According to the approved documentation, portable pumps are used for checking the pressure at which safety valves of high and low pressure contours of hydraulic

drive and turn control system actuate. In case of electric drive and turn control, the electromotor parameters are checked in accordance with the applicable requirements of Section 10 "Electrical Equipment".

9. The operation of the steerable propeller lubricating system is checked by recording pressure, and the operation of oil coolers is checked if they are connected to the bench systems.

10. According to the approved documentation, the actuation parameters of the alarm and safety systems detectors are checked. Such checks are normally performed by imitating the critical parameters with the steerable propeller out of action.

11. After the tests an inspection is made in the extent set by the program. As a rule, the gearing of the upper and lower reduction gears is subject to visual examination, together with the steerable propeller turning mechanism. Basing on the test results, the revision scope may be changed at the discretion of the Surveyor to the Register.

8 SYSTEMS AND PIPING

8.1 GENERAL

8.1.1 Application.

8.1.1.1 The provisions of this Section apply for the technical supervision during the manufacture of the system components listed in the RS Nomenclature at the shipyard and at the firm (manufacturer).

8.1.1.2 General provisions concerning the organisation of the technical supervision during the manufacture of system components are given in Part I "General Regulations for Technical Supervision" and those concerning the technical documentation – in Part II "Technical Documentation".

8.1.1.3 Pipes intended for the manufacture of the pipelines as well as the materials and related products used in the manufacture of the system components shall have documents stipulated by the RS Nomenclature.

8.1.2 Definitions and explanations.

Pipeline portions are straight and bent pipes with and without welded on components.

System components are pipelines and individual portions thereof, flexible joints and expansion fittings of all types and purposes, detachable joints (nipple unions, slip-on sleeves, flanges, etc), fittings of air pipes, ventilation ducts and venting systems, spark arresters of exhaust gas systems and uptakes.pieces,

8.1.3 Scope and procedure of surveying.

8.1.3.1 In general, the scope and procedure of surveying in the process of technical supervision during the manufacture of system components are specified in Table 8.1.3.1.

Table 8.1.3.1

Item of technical supervision	Inspection of materials used	External examination	Test by proof pressure	Inspection of welding processes	Check in operation
Fittings of classes I and II pipelines (as well as bottom, side, installed on forepeak bulkhead and remotely operated fittings) forepeak bulkhead and remotely operated fittings)	+	+	+	–	+
Fittings of venting system, cargo vapour return system and air pipe system	+	+	–	+	+
Flexible joints (including expansion pieces)	+	+	+	+	–

8.1.3.2 Irrespective of the survey scope prescribed by this Section, the technical supervision shall provide for periodic control over the technological processes affecting the product characteristics specified by the Register.

8.1.3.3 The scope and procedure of surveying prototypes and pilot samples (batches) of the products shall be established with due regard to Table 8.1.3.1 and the special requirements set out below. The results of surveying the prototype (pilot) sample shall be presented in the Report of surveying the prototype (pilot) sample.

8.1.4 Technical documentation.

8.1.4.1 The technical documentation for the items stated in the RS Nomenclature shall be approved by the Register.

8.1.4.2 The items included into the RS Nomenclature shall be permitted to be used for their intended purpose if the documents prescribed by the RS Nomenclature are available.

8.2 FITTINGS OF CLASSES I AND II PIPELINES AS WELL AS BOTTOM AND SIDE INSTALLED ON FOREPEAK BULKHEAD AND REMOTELY OPERATED FITTINGS

8.2.1 Technical supervision during the manufacture of the fittings of Class I and II pipelines as well as the bottom, side, installed on forepeak bulkhead and remotely operated fittings shall provide for checking:

.1 compliance of the materials used with the requirements of the technical documentation;

.2 freedom of surface defects (cracks, fractures, blow-holes, etc.) as well as defects at the attachments to pipelines);

.3 operation of the local and remote control gear;

.4 strength by hydraulic tests by a test pressure according to Section 21, Part VIII "Systems and Piping" of the Rules for the Classification and Construction of Sea-Going Ships;

.5 tightness of closures by hydraulic tests of the fittings in assembly by design pressure.

8.2.2 The control, safety and measuring fittings as well as air pipe automatic closing devices shall be checked in operation to confirm compliance with the requirements of the technical documentation.

8.2.3 When checking the remotely operated fittings, it is necessary to make sure that the valves are capable of taking up position stipulated by the technical documentation, in case of the automatic control failure as well as that the indications "open" and "closed" have been positioned properly.

8.2.4 During the technical supervision of the prototype and pilot samples of the fittings, provision shall be made for supplementary check of the continuous operation thereof under vibration, at limiting temperature and pressure values, as well as their operation under other special conditions which depend on the purpose of the fittings.

8.3 CLASS III PIPELINE FITTINGS

8.3.1 After the manufacture, Class III pipeline fittings shall be delivered together with documents according to the RS Nomenclature.

8.3.2 Where the specifications for the order do not stipulate the purpose of the fittings, the technical supervision during the manufacture thereof shall be performed in accordance with 8.2.

8.4 FITTINGS OF VENTING SYSTEM

8.4.1 Technical supervision during the manufacture of the valves of venting system of all types shall provide for checking:

.1 compliance of the materials used with the requirements of the technical documentation;

.2 freedom of surface defects, quality of the sealing and joining surface treatment, tightness of the fittings casings;

.3 compliance of the fittings construction with the technical documentation approved.

8.4.2 When surveying fittings equipped with flame arresters, attention shall be given to the compliance of the clear area of such fittings with the cross-sectional area of air pipes.

8.4.3 When surveying the pressure/vacuum valves and high-velocity venting devices, it is necessary to check at which pressure and vacuum values they come into operation.

8.4.4 The pressure/vacuum valves and high-velocity venting devices shall undergo type tests according to the requirements of IMO Circular MSC/Circ. No. 677.

8.4.5 When surveying the prototypes of the fittings equipped with flame arresting gauze, the non-flammability of combustible mixture vapours at a specified temperature shall be checked.

8.5 MECHANICAL, FLEXIBLE JOINTS AND EXPANSION PIECES

8.5.1 Technical supervision during the manufacture of the mechanical, flexible joints and expansion pieces intended for the pipelines of systems being subject of the Register technical supervision shall provide for checking:

.1 compliance of the material trade marks with the requirements of the technical documentation;

.2 compliance of the structural features, dimensions and other characteristics of the products with the approved technical documentation;

.3 strength of the joints and expansion pieces subjected to a hydraulic test in accordance with 21.2, Part VIII "Systems and Piping" of the Rules for the Classification and Construction of Sea-Going Ships;

.4 compliance of the mechanical joints with the requirements of 2.4.5, Part VIII "Systems and Piping" of the Rules for the Classification and Construction of Sea-Going Ships.

8.5.2 When surveying the prototype and pilot samples of non-metallic flexible joints, it shall be necessary to check them for fire-resistance in accordance with 2.5.5.6, Part VIII "Systems and Piping" of the Rules for the Classification and Construction of Sea-Going Ships.

8.5.3 The scope of the tests of the mechanical joints shall comply with the requirements of 2.4.5.14, Part VIII "Systems and Piping" of the Rules for the Classification and Construction of Sea-Going Ships and the method of tests – with the requirements of 8.5.4 of this Chapter.

8.5.4 Type tests of mechanical joints.

8.5.4.1 Documentation.

The following documentation shall be submitted by the firm (manufacturer) for review and approval:

.1 full description of the product;

.2 cross-sectional drawing indicating dimensions for assessing the joint construction;

.3 full list of materials for all unit components;

.4 data on the product quality system implemented at the firm (manufacturer);

.5 draft test program;

.6 initial information:

maximum design pressure and vacuum;
maximum and minimum design temperature;
media conveyed;
purpose;
allowable axial, horizontal and angular deflections;
requirements for installation.

8.5.4.2 Materials.

The materials used shall meet the requirements of 2.4.5.4, Part VIII "Systems and Piping" of the Rules for the Classification and Construction of Sea-Going Ships.

The firm (manufacturer) shall submit justified proof that all components are sufficiently resistant to the working medium at the design pressure and temperature.

8.5.4.3 Tests, procedures and requirements.

The aim of the tests is confirmation of the proper performance of the pipeline joints under prescribed service conditions. The scope and type of the tests, sequence of checks, number of test samples shall be approved by the Register depending on the joint type, its purpose and with consideration for the present requirements.

Unless otherwise specified, water or machine oil may be used as test medium.

8.5.4.4 Test program.

The requirements for testing the mechanical joints are set out in Table 8.5.4.4.

8.5.4.5 Selection of Test Specimen.

Test specimens shall be taken from the production line or firm's (manufacturer's) warehouse. Where there is a variety of size of joints requiring approval, a minimum of three separate sizes, representative of the range, from each type of joint to be tested in accordance with Table 8.5.4.4 shall be selected.

Table 8.5.4.4

Test types	Joint types			References and notes
	Compression, screwed nipple and nipple unions	Sleeve		
		Fixed	Slip	
Tightness test	+	+	+	8.5.4.8.1
Vibration (fatigue) test	+	+	–	8.5.4.8.2
Pressure pulsation test[2]	+	+	–	8.5.4.8.5
Burst pressure test	+	+	+	8.5.4.8.6
Pull-out test	+	+	–	8.5.4.8.7
Fire endurance test	+	+	+	8.5.4.8.8 (refer to .2.4.5.6*)
Vacuum test	+[3]	+	+	8.5.4.8.9
Repeated assembly test	+[4]	+	–	8.5.4.8.10

Symbols :
+ test is required;
– test is not required;
* of Part VIII, the Rules for Classification and Construction of Sea-Going Ship

[1] fixed that include grip type & machine grooved type
[2] for use in those systems where pressure pulsation other than water hammer is expected.
[3] except joints with metal-to-metal tightening surfaces.
[4] except press type.

8.5.4.6 Mechanical Joint Assembly.

Assembly of mechanical joints shall consist of components selected in accordance with 8.5.4.5 and the pipe sizes appropriate to the design of the joints. Where pipe material would effect the performance of mechanical joints, the selection of joints for testing shall take the pipe material into consideration. Where not specified, the length of pipes to be connected by means of the joint to be tested shall be at least five times the pipe diameter. Before assembling the joint, conformity of components to the design requirements, shall be verified. In all cases the assembly of the joint shall be carried out only according to the manufacturer's instructions. No adjustment operations on the joint assembly, other than that specified by the manufacturer, are permitted during the test.

8.5.4.7 Test Results Acceptance Criteria.

Where a mechanical joint assembly does not pass all or any part of the tests in Table 8.5.4.4, two assemblies of the same size and type that failed shall be tested and only those tests which the mechanical joint assembly failed in the first instance, shall be repeated. In the event where one of the assemblies fails the second test, that size and type of assembly shall be considered unacceptable. The methods and results of each test shall be recorded and reproduced as and when required.

8.5.4.8 Methods of tests.

8.5.4.8.1 Tightness test.

In order to ensure correct assembly and tightness of the joints, all mechanical joints shall be subjected to a tightness test, as follows:

.1 the mechanical joint assembly test specimen shall be connected to the pipe or tubing in accordance with the requirements of 8.5.4.6 and the manufacturer's instructions, filled with test fluid and de-aerated.

Mechanical joints assemblies intended for use in rigid connections of pipe lengths, shall not to be longitudinally restrained.

In the event where there is a drop in pressure or there is visual indication of leakage, the tests shall be repeated for two test pieces.

The pressure inside the joint assembly shall be slowly increased to 1,5 times the design pressure. This test pressure shall be retained for a minimum period of 5 min.

In the event of a drop in pressure or visible leakage, the test (including fire test) shall be repeated for two further specimens. If during the repeat test one test piece fails, the coupling is regarded as having failed.

An alternative tightness test procedure, such as a pneumatic test, may be accepted;

.2 for compression couplings a static gas pressure test shall be carried out to demonstrate the integrity of the mechanical joints assembly for tightness under the influence of gaseous media. The pressure shall be raised to maximum pressure or 7 MPa whichever is less;

.3 where the tightness test is carried out using gaseous media as specified in the procedure specified in 8.5.4.8.1.1, then the static pressure test mentioned in 8.5.4.8.1.2 above need not be carried out.

8.5.4.8.2 Vibration (fatigue) tests.

In order to establish the capability of the mechanical joint assembly to withstand fatigue, which is likely to occur due to vibrations under service conditions, mechanical joint assemblies shall be subject to the following vibration test. Conclusions of the vibration tests shall show no leakage or damage.

8.5.4.8.3 Testing of compression couplings and pipe unions.

Compression couplings and pipe unions intended for use in rigid pipe connections shall be tested as follows. Rigid connections are joints, connecting pipe length without free angular or axial movement:

.1 two lengths of pipe shall be connected by means of the joint to be tested. One end of the pipe shall be rigidly fixed while the other end shall be fitted to the vibration rig. The test rig and the joint assembly specimen being tested shall be arranged as shown in Fig. 8.5.4.8-1.

.2 the joint assembly shall be filled with test fluid, de-aerated and pressurised to the design pressure of the joint. Pressure during the test shall be monitored. In the event of a drop in the pressure and visible leakage the test shall be repeated as described in 8.5.4.8.1. Visual examination of the joint assembly shall be carried out. Re-tightening may be accepted once during the first 1000 cycles. Vibration amplitude shall be within 5 per cent of the value calculated from the following formula

$$A = \frac{2SL^2}{3ED}; \qquad (8.5.4.8.3)$$

where A = single amplitude, in mm;
L = length of the pipe, in mm;
S = allowable bending stress in N/mm^2 based on 0,25 of the yield stress;
E = modulus of elasticity of tube material (for mild steel, E = 210 kN/mm^2);
D = outside diameter of tube, in mm.

Test specimen shall withstand not less than 10^7 cycles with frequency 20 – 50 Hz without leakage or damage.

8.5.4.8.4 Sleeve joints with retaining rings or with set grooves.

Sleeve joints incorporating elastic sealing elements shall be tested in accordance with the method outlined below.

Use may be made of the test bed of cantilever type used for the fatigue tests. The diagram of installation of the test sample on the bed is shown in Fig. 8.5.4.8-2.

Two pipe lengths shall be joined by means of the test sample. One end of the unit shall be rigidly fixed while the other end shall be connected to the vibration gear. The fixed pipe length shall be as short as possible and on no account shall exceed 200 mm.

Joints intended for rigid fixing of the pipe ends shall not be relieved from the axial loads.

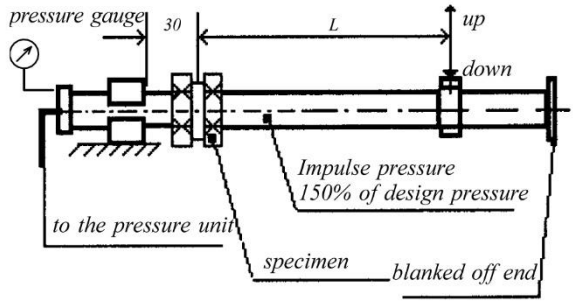

Fig. 8.5.4.8-1

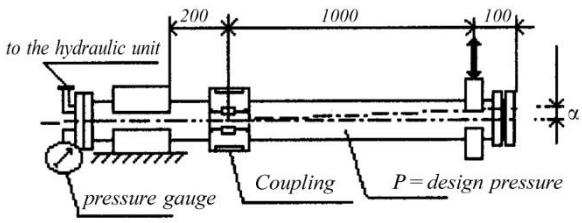

Fig. 8.5.4.8-2

The unit shall be filled with test liquid, deaerated, and the pressure therein shall be risen up to the design one. The preliminary angular deflection of the pipe axis shall correspond to the maximum deflection permitted by the firm (manufacturer).

The oscillation amplitude shall be measured at a distance of 1 m from the support at the free pipe end connected with the rotating element (refer to Fig. 8.5.4.8-2).

The test parameters shall correspond to those given below.

The pressure during the tests shall be monitored. In case of development of leakage or pressure drop the tests shall be repeated in accordance with 8.5.4.8.1. The absence of defects shall be confirmed by visual examination.

8.5.4.8.5 Tests by fluctuating pressure.

These tests shall be carried out to confirm the proper performance of the mechanical joints under the effect of the fluctuating pressure. Rigid joints shall be tested in accordance with the present procedure. A test specimen undergone the test according to 8.5.4.8.1 may be used for the tests.

For compression, screwed nipple and nipple union joints, the vibration tests and tests by fluctuating pressure shall be carried out simultaneously.

The test unit shall be connected to pressure source capable of generating a fluctuating pressure in accordance with the diagram in Fig. 8.5.4.8-3.

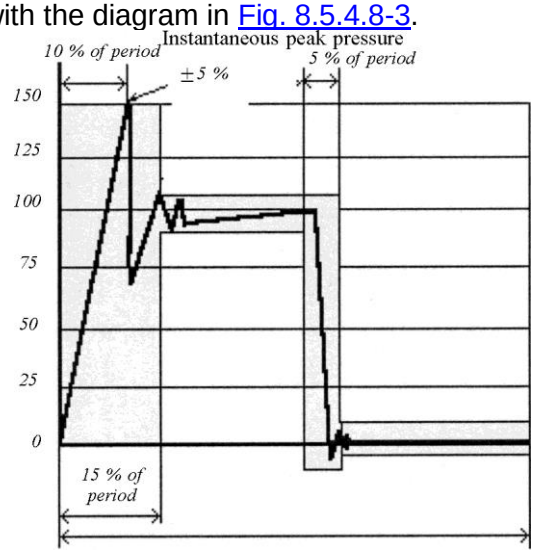

Fig. 8.5.4.8-3
Impulse pressure diagram

The fluctuating pressure shall change from 0 up to 1,5 the design pressure with a frequency of 30 to 100 cycles per minute. The number of cycles shall be not less than 5×10^5.

Absence of the leak and damage indications shall be confirmed by visual examination.

Number of cycles	Amplitude, mm	Frequency, Hz
3×10^6	±0,06	100
3×10^6	±0,5	45
3×10^6	±1,5	10

8.5.4.8.6 Test by collapsing pressure.

To confirm the capability of the mechanical joints of withstanding the pressure given in 2.4.5.5, Part VIII "Systems and Piping" of the Rules for the Classification and Construction of Sea-Going Ships, they shall be subjected to tests by collapsing pressure.

The test unit shall be assembled with due account of the recommendations of 8.5.4.6, filled with test liquid, deaerated and loaded to test pressure at the pressure increase rate not more than 10 per cent per minute. Joints intended for rigid fixing the pipe ends shall not be relieved from the axial loads.

The time during which the unit shall be kept under the maximum pressure shall be not less than 5 min.

If necessary, test specimens undergone the tightness test in accordance with 8.5.4.8.1 may be used in these tests.

The deformation of the test sample may be permitted when subjected to test pressure with no visible damages or leaks.

8.5.4.8.7 Pull-out test.

In order to determine ability of a mechanical joint assembly to withstand axial load likely to be encountered in service without the connecting pipe from becoming detached, following pullout test shall be carried out.

Pipe length of suitable size shall be fitted to each end of the mechanical joints assembly test specimen. The test specimen shall be pressurized to design pressure. When pressure is attained, an external axial load shall be imposed with a value calculated by the following formula:

$$L = \pi D^2 p/4, \qquad (8.5.4.8.7)$$

where D = outside pipe diameter, in mm;
p = design pressure, in N/mm^2;
L = applied axial load, in N.

The pressure and axial load shall be maintained for a period of 5 min.

During the test, pressure shall be monitored and relative movement between the joint assembly and the pipe measured.

The mechanical joint assembly shall be visually exa-mined for drop in pressure and signs of leakage or damage.

There shall be no movement between mechanical joint assembly and the connecting pipes.

8.5.4.8.8 Fire endurance test.

In order to establish capability of the mechanical joints to withstand effects of fire which may be encountered in service, mechanical joints shall be subjected to a fire endurance test. The fire endurance test shall be conducted on the selected test specimen as per the following standards:

ISO 19921:2005(E): Ships and marine technology – Fire resistance of metallic pipe components with resilient and elastomeric seals – Test methods;

ISO 19922:2005(E): Ships and marine technology – Fire resistance of metallic pipe components with resilient and elastomeric seals – Requirements imposed on the test bench.

Clarification for standards requirements.

1. If the fire test is conducted with circulating water at a pressure different from the design pressure of the joint (however at least 0,5 MPa), the subsequent pressure test shall be carried out to twice the design design pressure.

2. A selection of representative nominal bores may be tested in order to evaluate fire-resistance of a series pf range of mechanical joints of the same design. When a mechanical joint with a given nominal bore DN shall be tested, then other mechanical joints falling in the range DN to 2DN (both inclusive) are considered accepted.

3. Alternative test methods and/or test procedures considered to be at least equivalent may be accepted at the discretion of the Register in cases where the test pieces are too large for the test bench and cannot be completely enclosed by the flames.

4. Thermal insulation materials applied on couplings shall be non-combustible in dry condition and when subjected to oil spray. A non-combustibility test according to ISO 1182 shall be carried out.

8.5.4.8.9 Vacuum tests.

In order to establish the capability of the mechanical joint assembly to withstand internal pressures below atmospheric, similar to the conditions likely to be encountered under service conditions, the following vacuum test shall be carried out.

The mechanical joint assembly shall be connected to a vacuum pump and subjected to a pressure of 17 kPa. Once this pressure is stabilized, the specimen under test shall be isolated from the vacuum pump and the pressure shall be maintained for a period of 5 min. No internal pressure rise is permitted.

8.5.4.8.10 Check of repeat unit.

The mechanical joint shall be installed and removed 10 times according to the firm's (manufacturer's) instruction and then checked for tightness in accordance with 8.5.4.8.1.1.

8.6 SPARK ARRESTERS OF EXHAUST GAS SYSTEMS AND BOILER UPTAKES

8.6.1 Spark arresters shall be manufactured in accordance with the technical documentation approved by the Register. During the supervision, it is necessary to check:

.1 compliance of the materials, technological processes and scope of inspection of the welded joints with the approved technical documentation;

.2 tightness of the joints, closures, penetrations of pipes and fittings;

.3 availability of structural arrangements to provide effective spark arresting;

.4 availability of arrangements for clearing and draining tar;

.5 reliability of devices preventing in the wet type spark arresters water penetration into the engines and/or boilers;

.6 reliability of the measures to protect the insulation from damages.

8.7 PIPES

8.7.1 The pipes of the systems being subject to the technical supervision by the Register shall meet the requirements of Part XIII "Materials" of the Rules for the Classification and Construction of Sea-Going Ships. The Register documents for pipes shall be issued in accordance with the guidelines of the RS Nomenclature.

8.7.2 Plastic pipes shall be tested in accordance with 21.5, Part VIII "Systems and Piping" of the Rules for the Classification and Construction of Sea-Going Ships.

8.7.3 For obtaining a Type Approval Certificate for plastic pipes shaped components of the pipes and their joints the information specified below in 8.7.3.1 to 8.7.3.3 shall be submitted to the Register for consideration.

8.7.3.1 General information:

.1 pipe and fitting dimensions;

.2 maximum internal and external working pressure;

.3 working temperature range;

.4 intended services and installation locations;

.5 the level of fire endurance;

.6 electrically conductive;

.7 intended fluids;

.8 limits of flow rates;

.9 serviceable life;

.10 installation instructions;

.11 details of marking.

8.7.3.2 Drawings and supporting documentation:

.1 certificates and reports for relevant tests previously carried out;

.2 details of relevant standards;

.3 all relevant design drawings, catalogues, data sheets, calculations and functional descriptions;

.4 fully detailed sectional assembly drawings.

8.7.3.3 Materials:

.1 the resin type;

.2 catalyst and, accelerator types, and concentration employed in the case of reinforced polyester resin pipes or hardeners where epoxide resins are employed;

.3 a statement of all reinforcements employed where the reference number does not identify the mass per unit area or the tex number of a roving used in a filament winding process, these are to be detailed;

.4 full information regarding the type of gel-coat or thermoplastic liner employed during construction, as appropriate;

.5 cure/post-cure conditions. The cure and post-cure temperatures and times employ resin/ reinforcement ratio;

.6 winding angle and orientation.

8.7.3.4 Testing.

Testing for obtaining of Type Approval Certificate shall demonstrate compliance of pipes, fittings and joints with the requirements of Section 3, Part VIII "Systems and Piping" and 6.8, Part XIII "Materials" of the Rules for the Classification and Construction of Sea-Going Ships for each type subject to approval. Specimens of pipes, fittings and joints shall be tested in accordance with the requirements of standards accepted by the Register as applicable. Recommended standards and requirements for conducting tests of plastic pipes and fittings are given in Table 8.7.3.4.

Table 8.7.3.4

Nos.	Testing	Recommended standards or paragraph of the Rules	Notes
Recommended standards and requirements for conducting of pipes for all systems			
1	Internal pressure	6.8.2 [1], ASTM D 1599, ASTM D 2992, ISO 15493	1, 2, 6, 7
2	External pressure	6.8.2 [1], ISO 15493	1, 2, 6, 7
3	Axial strength	6.8.3 [1]	1, 2
4	Load deformation	ASTM D 2412	1
5	Temperature limitations	6.8.5 [1], ISO 75 Method A	3
6	Impact resistance	ISO 9854, ISO 9653, ISO15493, ASTM D2444	4
7	Ageing	ISO 9142	4
8	Fatigue	Manufacturer's standards	4
9	Fluid absorption	ISO 8361	
10	Material compatibility	ASTM C581	5, 6
Recommended standards and requirements for testing of pipes depending on service and location onboard			
11	Fire endurance	Appendixes 1 and 2 to IMO resolution A.753(18)	4, 5, 6, 7
12	Flame spread	Appendix 3 to IMO resolution A.753(18)	4, 5, 6, 7
13	Smoke generation	Appendix 3 to IMO resolution A.753(18)	4, 6
14	Toxicity	Appendix 3 to IMO resolution A.753(18)	5, 6
15	Electrical conductivity	ASTM F1173-95 or ASTM D257	5, 6, 7

Notes: 1 The largest, the least and mean diameter of dimension-range are to be tested.
2. Tests are carried out on the assemblies of pipes and fittings of various sizes.
3. For each type of material.
4. For each type of structure.
5. For each type of joint.
6. If applicable.
7. To be carried out in the presence of the Surveyor.

Reference: [1] – Part XIII "Materials" of the Rules for the Classification and construction of Sea-Going Ships.

8.8 SHIP'S HOSES

8.8.1 Supervision during the manufacture of ship's hoses intended for taking over and transfer of chemical cargo, crude oil, petroleum products, fuel oil, oil, bilge water and dirty water ballast as well as for transfer of cargo vapours shall provide for:

check for the compliance of the trade marks of materials used for the manufacture of the hose sleeves with the requirements of the technical documentation with respect to the parameters specified by the RS rules;

test by hydraulic pressure equal to 1,5 the working pressure;

verification of the hose markings;

check of electrical conductivity.

8.8.2 When surveying the prototypes, the hoses shall be subjected to tests in accordance with 6.2, Part VIII "Systems and Piping" of the Rules for the Classification and Construction of Sea-Going Ships.

8.8.3 Sleeves for the cargo hoses shall be generally delivered with Type Approval Certificates. Where there are no Type Approval Certificates, the sleeves may be used for the manufacture of the hoses, provided that samples from each sleeve batch are subjected to test according to 6.2.1, Part VIII "Systems and Piping" of the Rules for the Classification and Construction of Sea-Going Ships.

8.9 COUPLING GASKETS OF PIPE JOINTS

8.9.1 For obtaining a Type Approval Certificate for coupling packing material or gaskets of flanges and other types of pipe joints, the following shall be tested:

mechanical properties of the material at different temperatures;

resistance of the material to the effects of oil products and other working media;

chemical composition of the material for absence of asbestos.

Permissible application and pressure-temperature relationship for different media shall be determined upon the test results and stated in the Supplement to the Type Approval Certificate.

8.10 AIR PIPE AUTOMATIC CLOSING DEVICES

8.10.1 Each type and size of air pipe automatic closing device shall be surveyed and type tested including the following:

.**1** determination of the flow characteristics.

The flow characteristics of the air pipe closing device shall be determined. Measuring of the pressure drop versus rate of volume flow is to be carried out using water and with any intended flame or insect screens in place;

.2 tightness test during immersion/emerging in water.

An automatic closing device is to be subjected to a series of tightness tests involving not less than two (2) immersion cycles under each of the following conditions:

the automatic closing device shall be submerged slightly below the water surface at a velocity of approximately 4 m/min. and then returned to the original position immediately. The quantity of leakage shall be recorded;

the automatic closing device shall be submerged to a point slightly below the surface of the water. The submerging velocity shall be approximately 8 m/min and the air pipe vent head shall remain submerged for not less than 5 min.

Each of the above tightness tests shall be carried out in the normal position as well as at an inclination of 40 degrees under the strictest conditions for the device. In cases where such strictest conditions are not clear, tests shall be carried out at an inclination of 40 degrees with the device opening facing in three different directions: upward, downward, sideways (left or right).

The maximum allowable leakage per cycle shall not exceed 2 ml/mm of nominal diameter of inlet pipe during any individual test;

.3 discharge / reverse flow test.

A vacuum pump or another suitable device shall be connected to the opening of the air pipe leading to the tank. The flow velocity shall be applied gradually at a constant rate until the float gets sucked and blocks the flow. The velocity at the point of blocking shall be recorded. 80 % of the value recorded will be stated in the certificate.

8.10.2 Testing of non-metallic floats Impact and compression loading tests shall be carried out on the floats before and after pre-conditioning considering Table 8.10.2 as follows:

Table 8.10.2

Test condition	Test temperature °C		
	–25	+20	+85
Dry	+	+	+
After immerging in water[1]	+	+	+
After immerging in fuel oil[1]	–	+	–

Symbols:
"+" = test is needed;
"–" = test is not needed.

[1] Immerging in water and fuel oil shall be for at least 48 hours.

.1 impact test may be conducted on a pendulum type testing machine. The floats shall be subjected to 5 impacts of 2,5 Nm each and shall not suffer permanent deformation, cracking or surface deterioration at this impact loading. Subsequently the floats shall be subjected to 5 impacts of 25 Nm each. At this impact energy level some localised surface damage at the impact point may occur. No permanent deformation or cracking of the floats shall appear;

.2 compression loading tests shall be conducted with the floats mounted on a supporting ring of a diameter and bearing area corresponding to those of the float seating with which it is intended that float shall be used. For ball type float, loads shall be applied through

a concave cap of the same internal radius as the test float and bearing on an area of the same diameter as the seating. For a disc type float, loads are to be applied through a disc of equal diameter as the float. A load of 350 kg shall be applied over one minute and maintained for 60 minutes. The deflection shall be measured at intervals of 10 minutes after attachment of the full load. The record of deflection against time is to show no continuing increase in deflection and, after release of the load, there shall be no permanent deflection;

.3 tests of metallic floats shall be conducted in accordance with 8.10.2.1

9 BOILERS, HEAT EXCHANGERS AND PRESSURE VESSELS

9.1 GENERAL

9.1.1 The provisions of this Section apply during technical supervisions of boilers, heat exchangers and pressure vessels listed in the RS Nomenclature.

9.1.2 The Section contains requirements for the technical supervision during the manufacture of the mentioned supervised items at the manufacturer's.

9.1.3 General provisions concerning arrangement of the technical supervision during the manufacture of the supervised items are given in Part I "General Regulations for Technical Supervision" and those concerning the technical documentation – in Part II "Technical Documentation".

9.1.4 Related equipment and all materials including forgings and castings intended for boilers, heat exchangers, pressure vessels and the components thereof shall have documents confirming their compliance with the approved technical documentation. The documents for the products and materials shall be drawn up in accordance with the guidelines of the RS Nomenclature.

9.1.5 The scope and procedure of surveying in case of stable production of components, assemblies and products as a whole shall meet the requirements of Table 9.1.5, and the composition of the supervised items depending on their parameters shall be specified according to 1.3.2, Part X "Boilers, Heat Exchangers and Pressure Vessels" of the Rules for the Classification and Construction of Sea-Going Ships.

Table 9.1.5

Nos.	Item of technical supervision	Checking of					Hydraulictests
		documentation for materials and extenal examination	component treatment	welding operatioons	manufacture of compo-nents and assembblies of products	product assembbling	
1	**Steam and waters heating boilers, thermal fluid boilers:**			+	+	+	+
1.1	shells, end plates and drums	+	+	+	+		
1.2	headers and chambers	+	+	+	+	+	+
1.3	combustion chambers	+	+	+	+		
1.4	fire tubes	+	+	+	+		
1.5	boiler tubes and coils	+	+	+	+		+
1.6	boiler stays	+			+	+	
1.7	oil burner unit	+			+	+	
1.8	economizers	+				+	+
1.9	steam collectors (steam separators)	+	+	+	+	+	+
1.10	steam superheaters	+	+	+	+	+	+
2	**Heat exchangers and pressure vessels:**						
2.1	boiler feed heaters and deaerators	+				+	+
2.2	condensers of main turbines and electric generator turbines	+	+	+	+	+	+
2.3	condensers of auxiliary steam turbines	+	+	+	+	+	+
2.4	distillers					+	+
2.5	oil fuel and lubrication oil heaters	+				+	+

Nos.	Item of technical supervision	Checking of					Hydraulictests
		documentation for materials and extenal examination	component treatment	welding operatioons	manufacture of compo-nents and assembblies of products	product assembbling	
2.6	lubricating oil and water coolers of main and auxiliary machinery	+				+	+
2.7	air receivers	+	+	+	+	+	+
2.8	hydraulic accumulators	+				+	+
2.9	pressure vessels and heat exchangers of fire-fighting installations	+		+		+	+
3	**Fittings:**						
3.1	safety valves	+				+	+

9.2 TECHNICAL DOCUMENTATION

9.2.1 Boilers, heat exchangers and pressure vessels, their components and assemblies shall be manufactured and the production operations shall be performed under the Register supervision in accordance with the approved technical documentation listed in 1.3.4, Part X "Boilers, Heat Exchangers and Pressure Vessels" of the Rules for the Classification and Construction of Sea-Going Ships.

9.3 MATERIALS

9.3.1 Materials intended for the manufacture of the components and assemblies of boilers, heat exchangers and pressure vessels shall meet the requirements of the technical documentation approved by the Register.

Along with that, compliance of the firm's (manufacturer's) marking with the documents confirming the quality of this material shall be checked.

9.3.2 Material intended for the manufacture of the components and assemblies shall be checked by external examination for absence of defects (dents, hollows, cracks, etc.) which may be considered as an indication for rejecting the material.

9.4 TREATMENT OF MATERIALS

9.4.1 Cold bending of steel plates shall be allowed to a radius not less than trice the plate thickness. In case of cold bending of the steel shapes, the minimum bending radii *r* shall be as follows:

for angle bars $r \geq 50(a - 0{,}95s)$;

for channel along horizontal axis $r \geq 25h$;

for channel along vertical axis $r \geq 45h$

where *a* and s are the height and width of angle bar, respectively;

h is the height of channel.

9.4.2 After being drilled out, holes in the tube plates shall be checked to expose defects (cracks, lamination) and for the compliance of the dimensions of holes and tube plate portions between tubes with those indicated on the drawing.

The permissible deviations are given in Table 9.4.2.

The permissible deviations to the distance between the centres of the extreme holes shall not exceed ±3 mm, and between the axes of the extreme rows along an arc shall not exceed ±4 mm.

Table 9.4.2

Diameter, mm		Permissible deviations		
		holes	straight tube plate portion between tubes	oblique tube plate portion between tubes
Tubes	29,0	±0,1	±0,5	±0,7
	44,5	±0,2	±0,7	±1,1
Holes	29,2	±0,1	±0,5	±0,7
	44,8	±0,2	±0,7	±1,1

9.4.3 Heating of plates for forming, flanging, flaring and other similar work as well as the conditions and heating monitoring method shall comply with the practice approved by the Register.

The formed and flared parts and other components after hot treatment shall have no bursts, cracks, shoulders, crumples, folds, lamination, dents, etc.

9.5 WELDING

9.5.1 Prior to welding, edge preparation which shall be carried out in compliance with national standards or drawings approved by the Register shall be checked.

The surface of the edges shall be free of cracks, lamination and other defects.

9.5.2 Welding may be permitted after verification that the used welding consumables comply with the technical documentation approved by the Register; along with that, the welders shall have documents certifying their qualifications.

9.5.3 Welding of the components, their subsequent dressing and after-welding heat treatment shall be performed in compliance with the technological process approved by the Register.

9.5.4 Inspection of the welded joint quality shall be performed after heat treatment, if provided. For steels with the yield stress $R_{eH} \leq 360$ inspection of the welded joint quality may be performed prior to heat treatment.

9.5.5 The scope of the butt weld inspection as well as the choice of the inspection method (external examination of the weld surfaces, mechanical tests of test assemblies and tests by non-destructive methods) shall comply with the technical documentation approved by the Register; the inspection scope shall be not less that that given in Part XIV "Welding" of the Rules for the Classification and Construction of Sea-Going Ships.

9.5.6 When assessing the weld quality, the guidelines of Part XIV "Welding" of the Rules for the Classification and Construction of Sea-Going Ships shall be taken as a guide.

9.6 CHECK OF MANUFACTURE OF THE PRODUCT COMPONENTS AND ASSEMBLIES. FITTING-UP

9.6.1 General.

9.6.1.1 Before assembly, the components of the products shall be checked for compliance with the drawing dimensions (plate thickness, flanging radii, hole pitch, etc.), markings and documents for them. The regularity of the spherical surfaces shall be checked by gauges; for edge preparation for welding refer to 9.5.1.

9.6.1.2 The components and assemblies shall be fitted up within tolerance for the clearances between elements according to the technical documentation approved by the Register.

9.6.1.3 In order to obtain the required mating between them, the components joined shall not be straightened through an excessive interference by bolts, tacks or mated in cold condition by blows.

If necessary mating may be carried out by heating.

9.6.1.4 Deviations in dimensions given in this Chapter shall apply unless other tolerances for the manufacture and fitting-up of the product components and assemblies are specified in the technical documentation.

9.6.2 Manufacture of shells, end plates, tube plates.

9.6.2.1 Welded shells, end plates and tube plates shall be manufactured according to the production procedures and techniques developed by the firm (manufacturer) and approved by the Register.

9.6.2.2 After welding, the shell shall be calibrated to eliminate the shape distortions.

The deviations in dimensions of the shells (refer to Fig. 9.6.2.2) up to 3000 mm in diameter shall not exceed the following values:

for nominal outside diameter ΔD_0 – ±0,20 per cent;

for relative ovality $(A - B)/D_0$ and at wall thickness *s* ≤ 30 mm – 0,7 per cent and at *s* > 30 mm – 0,45 per cent.

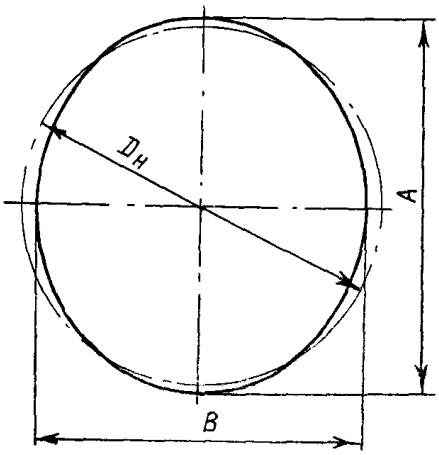

Fig. 9.6.2.2

Skewness of the longitudinal weld in relation to the drum axis shall be not more than 2 mm per 1 m; shell sag – not more than 2 mm per 1 m.

9.6.2.3 After heat treatment and machining, the end plates shall be thoroughly examined. No bulges, dents, deep scores, metal thinning-out shall be permitted. Longitudinal scores of not more than 1 mm deep shall be permitted on the cylindrical part.

9.6.2.4 Deviations in dimensions of the stamped end plates shall be within the following limits (refer to Fig. 9.6.2.4):

as regards outside diameter ΔD_o – ±0,20 per cent;

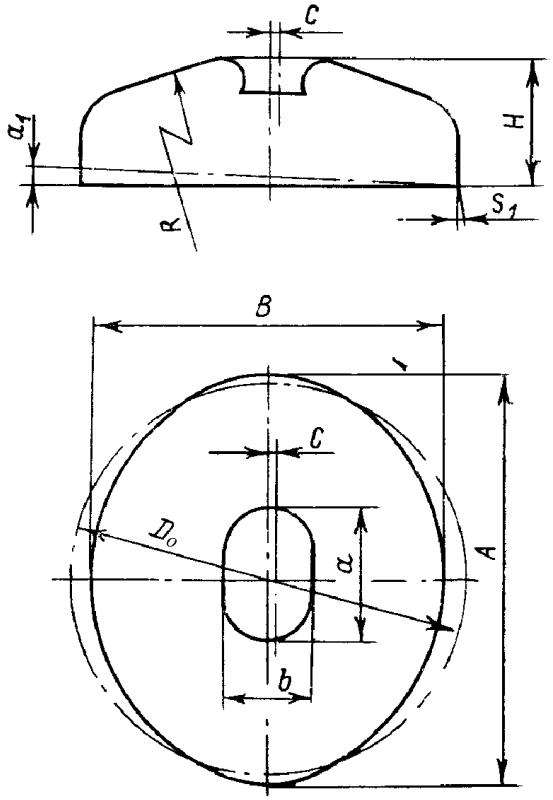

Fig. 9.6.2.4

as regards relative ovality *(A – B)/* D_o – not more than 0,4 per cent;

as regards skewness of side edge a_1/D_o not more than 2,5 mm per 1 m;

as regards shoulder thickness s_1 – ±10 per cent;

as regards manhole offset c – ±5 mm;

as regards manhole dimension deviation, mm $\Delta a = ^{0}_{-1,0}$; $\Delta b = ^{+1}_{-3}$;

as regards end plate radius Δ*R* = ±0,5 per cent;

as regards end plate height Δ*H* not more than *0,02H,* mm.

Deviations in the diameter of the forged end plates shall not exceed ±1 mm, and the manhole dimension ±0,5 mm.

9.6.3 Manufacture of headers and chambers.

9.6.3.1 Headers and chambers shall be manufactured according to the procedures and techniques developed by the firm (manufacturer) and approved by the Register.

9.6.3.2 Displacement of the abutting edges of the shell and end plates shall not exceed $a \leq 0{,}1s \leq 3$ mm, where s = wall thickness.

9.6.3.3 Nozzles, branch pieces and pads shall be welded to the header with preheating. In this case, offset of the holes and nozzles, branch pieces or pads shall not exceed ±2 mm.

9.6.3.4 After assemblage and heat treatment, each header shall be subjected to hydraulic test in accordance with 9.7.

Upon finalization of the tests, the header shall be measured. Deviations in length Δl and deflection Δd of the header shall be within the following limits:

for headers up to 5000 mm in length

$\Delta l = ^{-5}_{+10}$; $\Delta y = 2{,}0$;

for headers of 5000 mm and over in length

$\Delta l = ^{-10}_{+20}$; $\Delta y = 1{,}5$.

9.6.4 Manufacture of boiler tubes and coils.

9.6.4.1 Equipment used for bending tubes shall provide a bent tube portion of a regular geometric shape.

The thickening of the tube wall shall not exceed 18 per cent at $R/d_0 < 2{,}5$. The relative ovality of the tube $\theta = 2(d_{0\max} - d_{0\min})/(d_{0\max} + d_{0\min})\cdot 100$ shall not exceed 11 per cent at $R/d \leq 3{,}5$, and 8 per cent at $R/d > 3{,}5$ where *do* is outside diameter; *R* = bend radius.

For tubes made of steel of austenite class the relative ovality shall not exceed 5 per cent.

The minimum bend radius in case of cold bending shall exceed $2d_o$, in case of hot bending it shall exceed $1{,}5d_0$.

9.6.4.2 After bending, each tube shall be subjected to:

check for ovality by means of rolling a steel ball (the ball diameter shall be accepted according to standard);

check on a surface plate against a gauge to determine configuration and deviations in the bend radii which shall not exceed:

±2 mm for tubes up to 32 mm in diameter; and

±3 mm for tubes of 32 mm and over in diameter;

visual inspection to make sure that no surface defects (dents, scores, etc.) exist;

hydraulic test according to the RS rules.

9.6.4.3 Flat and cylindrical coils for the boilers and heat exchangers shall be manufactured according to the procedures and techniques of the manufacturer approved by the Register.

After manufacture and heat treatment the coils shall be measured and subjected to the hydraulic tests in accordance with 9.7.1.

The deviations in dimensions of the coils shall be within the limits given in Table 9.6.4.3.

Table 9.6.4.3

Coil type	Permissible deviations, in mm		
	in outside diameter ΔD_3	in coil radius, ΔR	in coil pitch, Δt
Pancake	±10	±5	±4
Cylindrical:			
for heaters	±5	±3	±3
for steam boilers	±3	±2	±1

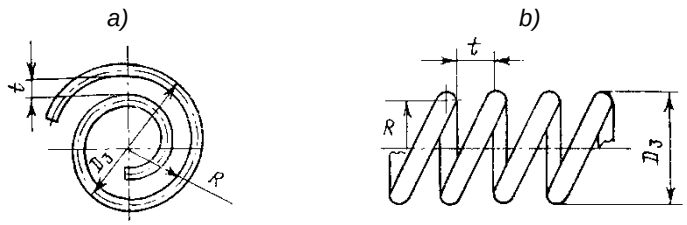

Fig. 9.6.4.3

Ovality of the coils shall be checked by means of rolling a steel ball of a diameter equal to 0,8 the inside diameter of tube.

9.6.5 Manufacture of fire tubes, combustion chambers and fastening elements.

9.6.5.1 Corrugated fire tubes shall be manufactured according to the procedures and techniques of the firm (manufacturer), approved by the Register.

9.6.5.2 Corrugated fire tubes with through cracks or wall thinning at flanging by more than 2 mm shall not be accepted.

Correction of slight tears up to 2 to 3mm on the corrugated surface of the fire tube shall be allowed when using procedures and techniques approved by the Register.

9.6.5.3 The following deviations are permitted in the fire tube dimensions: in wall thickness $^{+10\%}_{0}$ in length $^{+15\%}_{0}$, in ovality – 1 % of the mean diameter.

9.6.5.4 Bents and unevenesses on the surface of flat end plates and tube plates shall not exceed 0,2 per cent of the diameter or the greatest dimension of a rectangular tube plate.

9.6.5.5 The correctness of the stay installation and the length of the protruding parts shall be checked by external examination. Tightness of the welds shall be checked during the hydraulic test of the boiler.

9.6.6 Boiler shell fit-up.

9.6.6.1 When installing headers, the correctness of their positions shall be checked against axes and dimensions between centres. Deviations (refer to Fig. 9.6.6.1, *a* and *b*) shall not exceed the following values:

between the header axes, horizontally *A* ±2 mm, vertically *H* ±5 mm;

turn of the horizontal header axis Δ_1 – 3mm per 1 m;

slope of the longitudinal header axis Δ_2 – 0,35 mm per 1 m.

9.6.6.2 Before being installed in boilers, the tube ends shall be cleaned off bright over a length of about 100 mm and the end edges dulled. When the tubes are fastened by flaring, their ends shall be annealed before cleaning.

The external surface of the tubes shall be free of blisters, cracks, cavities, dents, scores, etc. Particular attention shall be given to cleanness of the tube ends.

Tubes prepared for one row shall not be rebent once more for use in other row.

9.6.6.3 Holes in the tube plates shall be clean and free of scores and dents. Ellipticity of the holes shall not exceed 0,25 for diameters of 50 mm and over. The maximum value of the ellipticity of holes over 50 mm in diameter shall not exceed 0,25 mm for each 50 mm extension of the diameter over 50 mm.

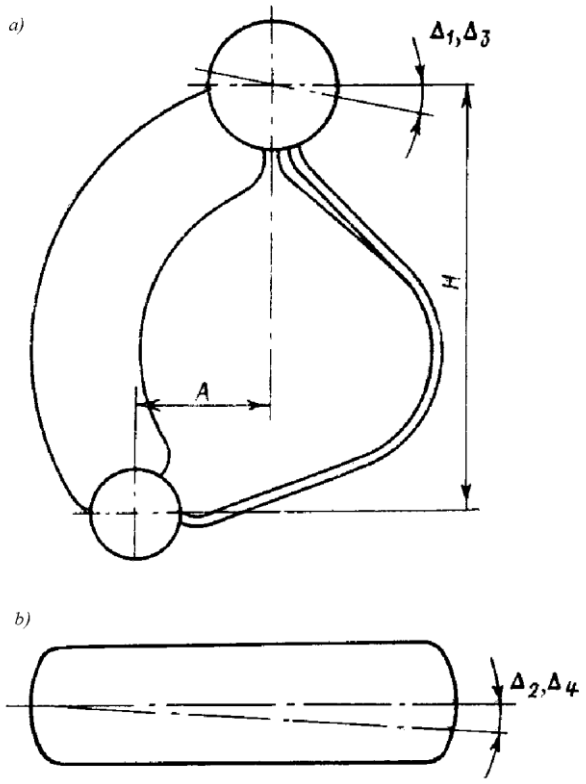

Fig. 9.6.6.1

9.6.6.4 The tube flaring degree shall meet the standards approved by the Register.

9.6.6.5 The welded joints of the tubes and coils to headers and chambers shall be performed according to the procedures and techniques of the firm (manufacturer) approved by the Register.

9.6.6.6 After flaring of all tubes and dismounting of the fit-up framework, the turn of the horizontal axis Δ_3 and slope of the steam and water header Δ_4 shall not exceed 2 to 6 mm and 5 to 14 mm per 1 m, respectively.

9.6.6.7 Flared joints shall be checked by external examination. After flaring, the internal surfaces of the tube ends shall be smooth, without dents, score marks, fins, cracks and lamination. Transition from the flared portion to the non-flared part of the tube shall be smooth, without notches, spiral or annular scores.

The height of the protruding ends of the tubes and their expansion angle shall be checked by a gauge and shall correspond to the drawing dimensions.

9.6.6.8 The tubes mounted shall be checked for passability by steel calibrated balls which diameter shall be by 10 per cent less than the inside diameter of the tube.

9.6.6.9 The tightness of the flared joints shall be checked during hydraulic tests (refer to 9.7.2).

The same tube shall not be flared more than two times, otherwise it shall be replaced.

9.6.6.10 Before the fittings are installed, the surfaces of pads and flanges of the fittings shall be cleaned from dirt, oil, rust.

No scratches and scores (especially the radial ones) shall be permitted on the surface of pads and flanges.

9.6.6.11 Before being installed in regular positions, the boiler fittings shall be subjected to hydraulic test in accordance with the requirements of Table 1.7.1, Part X "Boilers, Heat

Exchangers and Pressure Vessels" of the Rules for the Classification and Construction of Sea-Going Ships.

9.6.6.12 The quality of the fittings installation shall be checked by external examination. The positions of the water level indicators, interiors of the headers shall be checked for compliance with the requirements of the technical documentation.

Tightness of the fittings connection shall be checked during the hydraulic tests of the boiler.

9.6.6.13 After installation of the insulation and complete fit-up, the boiler casing shall be tested for tightness (by air); the test pressure and allowable air pressure drop shall meet the requirements of the approved technical documentation.

9.6.6.14 Prior to the installation of the brickwork, the enclosure walls and drain pans shall be examined. They shall have no bulges, concavities and unevenesses exceeding 10 mm per 1 m.

9.6.6.15 The quality of the brickwork after installation shall be checked by external examination. The brickwork surface shall be smooth; as an exception, individual steps not more than 2 to 3 mm at butts and total uneveness not more than 10 mm shall be allowed per 1 m.

Deviation in the tuyere hole diameter from the prescribed value shall not exceed ±5 mm, and the misalignment of the axes of the burner tuyere hole – 2 mm.

9.6.6.16 The quality of insulation installation of the headers, fittings and other hot parts of the boiler shall be checked by external examination.

9.6.7 Fit-up of heat exchangers and pressure vessels.

9.6.7.1 When fitting up heat exchangers and pressure vessels, all components and assemblies shall be examined to expose surface defects.

9.6.7.2 In fitting up such components and assemblies, it is necessary to be guided by the requirements of 9.6.1 to 9.6.4 and 9.6.6, if applicable.

9.7 HYDRAULIC TESTS

9.7.1 General.

9.7.1.1 Hydraulic tests by proof pressure shall be conducted by permit and in the presence of the Surveyor to the Register on condition that:

all assembling, welding and weld inspecting operations are completed and accepted by the technical control body of the firm (manufacturer);

components of the product have no insulation and other protective coatings;

entries in the manufacture book and also entries to the effect that no deviations from the technical documentation approved by the Register exist, are verified;

there is a document of the firm's (manufacturer's) technical control body on the readiness of the component or product for hydraulic test;

component or product has been surveyed by the surveyor to the Register;

devices intended for tests (presses, instruments, etc.) have documents of the appropriate competent authorities.

9.7.1.2 Hydraulic tests shall be conducted with the current regulations and the firm's (manufacturer's) instructions being adhered to.

9.7.1.3 Components and products shall be filled with water in such manner that they are completely deaerated. The temperature of water and ambient air shall be not lower than +5 °C. The difference in water and ambient air temperature shall preclude sweating.

9.7.1.4 Pressure gauges used in hydraulic tests shall have an accuracy class not lower than 1,5 and the diameter of the casing not less than 160 mm. The upper limit of the device range shall be such that during the tests the pointer is positioned in the middle third of the scale. Pressure gauges shall be tested and marked with the date of calibration by the competent bodies.

The product being tested shall be fitted with at least two similar pressure gauges arranged at the same level in the upper part of the product, and one more pressure gauge to be arranged directly on the pump. In all cases, the difference in indications of the pressure gauges fitted shall not exceed 3 per cent of the upper limit of the indication.

9.7.1.5 The pressure during the test shall rise smoothly without water hammers. Use of injectors or feed pumps for generating pressure shall not be permitted.

9.7.1.6 No other works accompanied by noise hindering the tests shall be performed during the hydraulic tests.

9.7.1.7 During the hydraulic tests the pressure shall be raised up to the proof pressure and shall be maintained during the time period required for examination but not less than 10 min.

9.7.1.8 During the hydraulic tests of the casings of headers, chambers and boiler assemblies, the pressure shall be gradually raised up to the working pressure. At such pressure, the welds shall be tapped all the way along with a copper hammer of not more than 1 kg in mass with a handle of not more than 300 mm long. Thereafter the pressure shall be raised up to the proof pressure, maintained during 5 to 10 min, then again reduced down to the proof pressure and maintained constant until the examination is completed.

9.7.1.9 If during the tests, knocks, booms are heard in the product, or defects affecting the strength thereof are detected, the test shall be interrupted and resumed anew only after correction of these defects.

When the product is held under the proof pressure, no pressure drop shall take place.

Appearance of sweating and water drops on the welds shall not be permitted. Such welds shall be chipped out and welded anew.

Correction of the weld defects by caulking, centre-punching or other mechanical methods shall not be permitted. Re-rolling or application of a back-up weld to the components of products subject to pressure shall not be permitted.

9.7.1.10 Upon completion of the hydraulic test of the product, the surveyor to the Register shall carry out internal examination (if the product is accessible for examination), in the process of which the accessible areas shall be checked for condition of the working surfaces, absence of residual deformation and other defects.

9.7.1.11 The products shall be considered as having passed the test by proof pressure, if weld leaks, cracks, local bulges, residual deformations and other indication of any joint disturbances are not found.

9.7.2 Hydraulic tests of boilers.

9.7.2.1 Prior to hydraulic tests of boilers it is necessary to make sure that all components thereof have been subjected to hydraulic tests by test pressure given in Table 1.7.1, Part X "Boilers, Heat Exchangers and Pressure Vessels" of the Rules for the Classification and Construction of Sea-Going Ships.

9.7.2.2 Boilers after assembly but without fittings shall be tested in the workshop for strength by test pressure given in Table 1.7.1, Part X "Boilers, Heat Exchangers and Pressure Vessels" of the Rules for the Classification and Construction of Sea-Going Ships.

9.7.3 Hydraulic tests of heat exchangers and pressure vessels.

9.7.3.1 Heat exchangers, pressure vessels and their components shall be tested in the workshop for strength by test pressure given in Table 1.7.1, Part X "Boilers, Heat Exchangers and Pressure Vessels" of the Rules for the Classification and Construction of Sea-Going Ships.

9.7.4 Issuance of the Register documents.

9.7.4.1 Where the results of the internal examination and hydraulic test of a boiler, heat exchanger or air receiver are successive, the surveyor to the Register shall issue a certificate.

Along with that, material marking shall be put on the product in accordance with the regulations in force at the firm (manufacturer).

9.8 DETAILS OF TECHNICAL SUPERVISION DURING MANUFACTURE OF PROTOTYPES

9.8.1 Prototypes shall be surveyed by the Surveyor to the Register according to the RS Nomenclature.

9.8.2 All the requirements of this Section which apply to the manufacture of the items of supervision in case of stable production shall apply equally to the manufacture of the prototypes.

The assemblies and components of ultimately new engineering designs or manufactured according to new production procedures and techniques shall be additionally subjected to a special check by the Register.

9.8.3 Prototype of a boiler, other than the waste-heat boiler, shall be subjected to comprehensive tests on a bench according to an extended program approved by the Register to check the reliability and long-term performance of the components, assemblies and the products as a whole as well as to check for the compliance of the parameters and characteristics with the approved technical documentation.

If the check of all parameters of the prototype with regular equipment under conditions of a test bench is impracticable, then the bench tests may be conducted partially on board.

9.8.4 The findings of the surveys and tests of the prototype shall be presented in the Prototype (Pilot) Sample survey Report.

In cases specified in Section 6, Part I "General Regulations for Technical Supervision" this Report serves as a basis for the issuance of Type Approval Certificate.

9.8.5 Where, based on the survey and test results, a decision is taken on the possibility of installing the prototype on board, the surveyor shall draw up the Register certificate in accordance with 9.7.4.

10 ELECTRICAL EQUIPMENT

10.1 GENERAL

10.1.1 The provisions of this Section apply during technical supervision of electrical equipment listed in the RS Nomenclature.

10.1.2 The Section contains the basic provisions on surveying and testing at the firm (manufacturer) of product prototypes and products at steady production.

The technical instructions and test standards specified in 10.3 to 10.7 pertain equally to product prototypes and products at steady production.

The instructions relating to the scope of checks and tests during surveying products at steady production are given in 10.8.

General and special types of tests and checks of product prototypes and products at steady production are given in Tables 10.1.2-1 and 10.1.2-2.

Table 10.1.2-1

General types of tests and checks of product prototypes and products at steady production of electrical equipment

Nos.	Products	Inspection and checks		Measurements of insulation resistance		Check of operability		Tests of electrical insulating strength		Tests for compliance with operational conditions (mechanical and environmental)		Tests of protective enclosures		Heat tests		Overcurrent tests		Check of radio interference level		Tests for immunity to electromagnetic emission (EMC)	
		P	S	P	S	P	S	P	S	P	S	P	S	P	S	P	S	P	S	P	S
1	Electrical machines[1]	+	+	+	+	+	+	+	+	+		+	+	+		+	+	+			
2	Transformers[2]	+	+	+	+	+	+	+	+	+		+	+	+		+[1]	+				
3	Static converters	+	+	+	+	+	+	+	+	+		+	+	+		+	+	+		+	
4	Accumulators	+	+	+	+			+	+	+		+									
5	Switchgear	+	+	+	+	+	+	+	+	+		+	+	+				+[3]		+	
6	Electrical apparatus (switching, protective, etc.)	+	+	+	+	+	+	+	+	+		+	+	+				+		+	
7	Capacitors and capacitor sets to raise a power factor	+	+	+	+			+	+	+		+									
8	Busducts	+	+	+	+			+	+	+		+	+	+		+					
9	Electrical measuring instruments	+	+	+	+	+	+	+	+	+		+	+	+				+		+	
10	Electric drives (as a set)	+	+	+	+	+	+	+	+	+		+						+		+	
11	Electrical equipment of electrically-started internal combustion engines	+	+	+	+	+	+	+	+	+		+		+				+		+	
12	Lightning fixtures, search lights and control gear of gas-discharge lamps	+	+	+[3]	+	+	+	+[3]	+	+		+	+	+[3]				+[4]		+	
13	Ship's control and monitoring, communication and alarm devices	+	+	+	+	+	+	+	+	+		+		+				+[5]		+	
14	Cable products	+	+	+	+	–	–	+	+	+		+		+							
15	Heating and cooking appliances	+	+	+	+	+	+	+	+	+		+									
16	Items and devices for installation, splicing and connection of cables and wires	+	+	(+)	(+)	(+)	(+)	(+)	(+)	(+)	–	–	–	(+)	–	–	–	–	–	–	–

Nos.	Products	Inspection and checks		Measurements of insulation resistance		Check of operability		Tests of electrical insulating strength		Tests for compliance with operational conditions (mechanical and environmental)		Tests of protective enclosures		Heat tests		Overcurrent tests		Check of radio interference level		Tests for immunity to electromagnetic emission (EMC)	
		P	S	P	S	P	S	P	S	P	S	P	S	P	S	P	S	P	S	P	S

Symbols: P = prototype; S = production sample;
" + " = test is needed;
"(+)" = test performance depends on the particular product;
" – " = test is not needed.

1 For electric motors over 2 kW.
2 For power transformers only.
3 For navigation lights commutators.
4 Excepting accumulator, portable, explosion-proof lighting fixtures.
5 Excepting the lightening fixtures with incandescent lamps and with no ignition control devices.
6 For engine telegraphs, sensors of rudder angle and blade angle indicators, tachometers, telephone switchboards and apparatus of light and sound alarm devices, switches.

Table 10.1.2-2

Special types of tests and checks of product prototypes and products at steady production of electrical equipment

Nos.	Products	Torque overload tests		Stalling tests		Tests for immunity to shortcircuit		Overspeed tests		Check of commutator machines commutation		Check of operability at load loss and increase		Check of secondary voltage variation value		Tests for limiting commutation stability		Check for operate and release values		Check of manual interlocks operation		Check of manual drive and an indicator of commutation positions		Check of electromagnetic brakes operation		Check of minimal voltage protection		Check of track and limit switches operation		Heat stability tests		Check of on-load and no-load operation		Check of capacitors discharge time		Insulation breakdown tests		Tests for tightness of tanks, cans, monoblocks and other products		Check of automatic starting after voltage recovery		Measuring of loss-angle tangent		Check of protection and alarm systems		Check of mechanical and thermoplastic properties of cables	
		P	S	P	S	P	S	P	S	P	S	P	S	P	S	P	S	P	S	P	S	P	S	P	S	P	S	P	S	P	S	P	S	P	S	P	S	P	S	P	S	P	S	P	S	P	S	P	S	P	S
1	Electrical machines	+[1]		+[2]		+[3]		+		+[4]																																				+	+		
2	Transformers[5]					+								+[6]																								+[6]	+										
3	Static converters					+						+																																		+	+		
4	Accumulators																													+[7]								+[8]	+										
5	Switchgear					+																								+																			

Nos.	Products	Torque overload tests		Stalling tests		Tests for immunity to shortcircuit		Overspeed tests		Check of commutator machines commutation		Check of operability at load loss and increase		Check of secondary voltage variation value		Tests for limiting commutation stability		Check for operate and release values		Check of manual interlocks operation		Check of manual drive and an indicator of commutation positions		Check of electromagnetic brakes operation		Check of minimal voltage protection		Check of track and limit switches operation		Heat stability tests		Check of on-load and no-load operation		Check of capacitors discharge time		Insulation breakdown tests		Tests for tightness of tanks, cans, monoblocks and other products		Check of automatic starting after voltage recovery		Measuring of loss-angle tangent		Check of protection and alarm systems		Check of mechanical and thermoplastic properties of cables	
		P	S	P	S	P	S	P	S	P	S	P	S	P	S	P	S	P	S	P	S	P	S	P	S	P	S	P	S	P	S	P	S	P	S	P	S	P	S	P	S	P	S	P	S	P	S	P	S	P	S
6	Electrical apparatus (switching, protective, etc.)					+[9]										+		+[10]		+	+	+[11]	+																										
7	Capacitors and capacitor sets to raise a power factor																													+				+	+			+	+			+	+						
8	Busducts					+																														+[12]				+[13]	+			+	+		
9	Electrical measuring instruments																																																
10	Electric drives (as a set)			+[14]																+[15]	+	+	+	+	+	+		+	+			+	+																
11	Electrical equipment of electrically- started internal combustion engines																							+																									
12	Lighting fixtures and control gear of gas-discharge lamps																													+				+[16]															
13	Ship's control and monitoring, communication and alarm devices																																							+[17]								+[18]
14	Cable products																																			+													
15	Heating and cooking appliances																																																

Nos.	Products	Torque overload tests		Stalling tests		Tests for immunity to shortcircuit		Overspeed tests		Check of commutator machines commutation		Check of operability at load loss and increase		Check of secondary voltage variation value		Tests for limiting commutation stability		Check for operate and release values		Check of manual interlocks operation		Check of manual drive and an indicator of commutation positions		Check of electromagnetic brakes operation		Check of minimal voltage protection		Check of track and limit switches operation		Heat stability tests		Check of on-load and no-load operation		Check of capacitors discharge time		Insulation breakdown tests		Tests for tightness of tanks, cans, monoblocks and other products		Check of automatic starting after voltage recovery		Measuring of loss-angle tangent		Check of protection and alarm systems		Check of mechanical and thermoplastic properties of cables	
		P	S	P	S	P	S	P	S	P	S	P	S	P	S	P	S	P	S	P	S	P	S	P	S	P	S	P	S	P	S	P	S	P	S	P	S	P	S	P	S	P	S	P	S	P	S	P	S	P	S

Symbols (refer to Table 10.1.2-1).

1 For a.c. and d.c. electric motors.
2 For propulsion motors, anchor and mooring machinery motors, and motors of the direct drive of the rudder and steering gear.
3 For a.c. and d.c. generators.
4 For d.c. generators and motors, control generators, phase-wound motors and other commutator machines.
5 For power transformers and current transformers.
6 For power transformers only.
7 Tests for heat resistance of the acid battery mastic.
8 Checking of acid battery monoblocks tightness.
9 Applied to circuit breakers, switches, breakers, disconnectors, contactors, current relays and other relays connected in series in power circuits.
10 For circuit breakers, starters, controllers, electromagnetic brakes, electrohydraulic pushers.
11 For circuit breakers, switches, breakers, disconnectors, starters, field rheostat controllers.
12 For insulators, busducts and other insulators.
13 For steering machinery and watertight doors machinery.
14 For anchor and mooring machinery and directly-driven steering machinery.
15 For boat winches, lifts, watertight door drives.
16 For lighting fixtures with gas-discharge lamps.
17 Fuel-oil and luboil heaters if covered by 1.3.2.1, Part XI "Electrical Equipment" of the Rules for the Classification and Construction of Sea-Going Ships.
18 Periodically and selectively by agreement with the Register.

10.1.3 The general provisions on the organization of technical supervision during manufacture of technical supervision items are given in Part I "General Regulations for Technical Supervision", and on technical documentation, in Part II "Technical Documentation".

10.2 SCOPE AND PROCEDURE OF ELECTRICAL EQUIPMENT SURVEYING

10.2.1 Prior to tests of electrical equipment, the following shall be available at the firm (manufacturer):

.1 the Register approved technical documentation on the electrical equipment testing;

.2 documents for parts confirming the Register technical supervision during their manufacture if such supervision is required by the RS Nomenclature;

.3 the Register approved test program;

.4 documents of competent bodies, which confirm positive results of special types of tests if provided by the test program (for flameproofness, etc.);

.5 testing equipment specified in the program with pertinent documents confirming equipment parameters. Requirements for testing laboratories are specified in 5.7, Part I "General Regulations for Technical Supervision";

.6 instruments having the accuracy rating of at least 1,5.

10.2.2 In surveying, the surveyor shall satisfy himself that tests are carried out in consistency with the Register approved program following the test procedures set forth in this Section or other equivalent procedures.

10.2.3 Breaks are allowed during the performance of single types of tests or between them if these do not affect testing.

10.2.4 The surveyor can reject survey or tests performance if an item is inadequately prepared for tests, and also when defects effecting the safety of survey or test performance are revealed.

10.2.5 If damages to single parts are identified or product operability is effected during testing, the product shall be inspected in the the presence of the Surveyor with a view to detect defects, whereupon the Surveyor takes decision on the further test performance.

10.2.6 If a product has failed to pass a certain kind of tests and, as the result, its design has been changed or improved, the tests shall be repeated in accordance with the test program. The scope of those tests is established by the Surveyor.

10.3 SEQUENCE OF TESTS AND CHECKS PERFORMANCE

10.3.1 Inspection.

10.3.2 Tests:

.1 functional;

.2 mechanical and environmental for:

detection of resonance frequencies;
vibration strength;
vibration resistance;
shock strength;
shock resistance;
immunity to temperature changes;
heat stability;
humidity resistance;
strength of insulation;
cold endurance;
resistance to hoarfrost and moisture after thawing;
resistance to motions;
resistance to prolonged inclinations;

.3 other types of tests in the sequence specified in the test program for single types of products;

.4 checking of the voltage level and radio interference field strength level;

.5 tests for immunity to electromagnetic environment.

N o t e s : 1. It is permitted to combine tests for vibration resistance and vibration strength or shock resistance and shock strength if test methods specified are followed.

2. Irrespective of the sequence specified and need not be on the specimens being subjected to other types of tests, the following tests may be performed:

.1 for exposure to salt mist;
.2 for exposure to solar radiation;
.3 for fungus resistance;
.4 some others specified in the provisions on tests of particular types of products.

3. It is permitted to combine tests for immunity to temperature changes and for heat stability and cold endurance.

4. The test for heat stability may be combined with a heating test for single products.

10.3.3 The tests and checks shall be carried out on common specimens in a sequence to be specified in test programs and methods.

The types of tests and checks not required for single types of products may be ignored in the program, but the general sequence shall be retained. Prior to, and after the completion of, each type of the test, insulation resistance is measured.

10.4 BASIC INSTRUCTIONS ON TESTS AND CHECKS PERFORMANCE

10.4.1 Inspection and checks.

10.4.1.1 An inspection and checks are carried out with a view to establish:

.1 compliance of product specimens with approved technical documentation;

.2 compliance of product specimens with the RS rules requirements, which observance is not specified in the approved technical documentation;

.3 availability of the product submitted for testing.

10.4.1.2 The following shall be checked during the inspection (including openings-up and single disassemblies if needed):

.1 technical documentation for materials the product is made of;

.2 accessories being part of the equipment inspected;

.3 mounting of the electrical circuit of the product;

.4 structural design of the product;

.5 strength of connecting and fastening units, current-carrying parts, welded, screwed and other structural and contact joints;

.6 availability of anticorrosion coatings;

.7 availability of necessary markings and inscriptions;

.8 contact and protective terminations of cables and wires;

.9 arrangements ensuring electrical safety (protective earthing, interlocks, etc.).

10.4.2 Functional tests.

10.4.2.1 Functional tests apply to each product specimen at the firm (manufacturer) prior to performance of single types of tests.

10.4.2.2 Prior to functional tests performance, it shall be ascertained that product completeness, spare parts and insulation resistance are consistent with technical documentation.

10.4.2.3 The functional tests of electrical equipment shall be carried out at the design conditions specified in technical documentation at normal environmental conditions.

10.4.2.4 In the functional tests, the necessary measurements are conducted and characteristics are taken both at the rated supply voltage and frequency, and the prolonged (simultaneous) deviations of voltage by +6 per cent and –10 per cent and of frequency by ±5 per cent, and at the short-term (simultaneous) deviations of voltage by ±20 per cent and frequency by ±10 per cent. The equipment intended for operation from accumulator batteries shall be tested at the voltage deviation from a design value within the range +30 to –25 per cent if supplied from the battery connected to a charger, and within the range +20 to –25 per cent if not connected to the battery being charged. To be checked are the conformity of measurements and characteristics with the values specified in technical documentation, and the operability of a product within the set parameters.

10.4.2.5 Characteristics of electrical equipment operating under load are taken after reaching a steady working temperature.

10.4.3 Measurement of insulation resistance.

10.4.3.1 In testing electrical equipment at the firm (manufacturer), insulation resistance shall not be less than specified in Appendix 1.

10.4.3.2 The mesurement of insulation resistance is compulsory at the following stages of tests performance:

.1 prior to, and after the completion of, all types of tests under normal environmental conditions with a product being practically in the cold state;

.2 during tests for heat stability in the heated state, as well as during heating tests immediately after their completion;

.3 at the end of tests for humidity resistance and resistance to hoarfrost and moisture after thawing;

.4 after tests for cold endurance and resistance to hoarfrost and moisture after thawing;
.5 after product tests for short-circuit under normal environmental conditions.

10.4.3.3 The d.c. voltage produced by a megohmmeter during measurements of insulation resistance shall be at least as specified:

Rated voltage of a product or circuit U_r, in V	Measuring voltage of a megohmmeter, in V
Up to 50	100
51 – 100	250
101 – 500	500
501 – 1000	1000
over 1000	2500

N o t e s : 1. Except for electrical machines.
2. The measuring voltage for transformers at U_r < 100 V shall be at least 500 V
3. The measuring voltage for capacitors of sets for raising power factor (cos φ) for a voltage U_r ≥ 380 V shall be equal to 2500 V

10.4.3.4 Insulation resistance shall be measured between:
.1 all product parts intended for operation at the same voltage and connected together during measurements and any metallic product part within reach that can be touched (enclosure, handle, etc.);
.2 product parts being alive in operation and electrically not interconnected, between various windings;
.3 each insulated core of cable products and the other cores in any sequence and the metallic cable sheath (armor, screen), and in the absence of these latter, with an electrode in water wherein the cable product is being immersed.

10.4.3.5 Megohmmeter indications of insulation resistance values shall be taken once the voltage applied becomes steady.

10.4.4 Tests of insulation strength.

10.4.4.1 The insulation strength of products, excepting single types specified in 10.4.6 where the time, voltage and frequency are specially stipulated, shall be tested during 1 min by the application of alternating voltage of the practically sinusoidal form with a frequency of 50 Hz at normal environmental conditions according to the following:

Voltage, in V rated U_r	Test
up to 65	$2U_r$ +500
66 – 250	1500
251 – 500	2000
501 – 1000	$2U_r$ +1000
1001 – 3600	10000
3601 – 7200	20000
7201 – 11000	28000

N o t e s : 1. The semiconductor elements of electrical devices that may be disconnected under tests. During shutoff of the specified components the test voltage value shall be defined by the manufacturer with due regard to specifications of such elements.
2. The error in measuring the test voltage is not more than ±1,5 per cent.

10.4.4.2 General instructions on the performance of insulation strength tests and the explanations thereto are given in Table 10.4.4.2.

Table 10.4.4.2

Nos.	Stages of tests performance	Test voltage	Comments
1	Immediately after the comple-tion of tests for heat stability (heating) at a temperature of single parts equal to, or near, the maximum one reached during the above tests under normal environmental conditions	Full normalized	
2	After product shortcircuit tests (if any) under normal environmental conditions[1]	0,8 normalized	For products with windings and products with elements inaccessible for inspection of which the insulation was exposed to short-circuit currents
3	Upon completion of vibration and shock exposure of the poduct in its practically cold state under normal environ-mental conditions of tests	0,7 normalized	
4	At the end of product tests for humidity resistance under the conditions specified for tests in a humidity chamber	0,5 normalized, but at least 1,25 times the rated voltage of the product	

[1] This test also covers the apparatus tested for the limiting switching capacity by the current equal to the rated short-circuit current (or near short-circuit currents).

10.4.4.3 The test voltage shall be alternately applied between windings or other current-carrying parts of a product, as well as between windings and other current-carrying parts and the metal case of the product.

10.4.4.4 The test results are considered satisfactory if no insulation breakdown or damage, tracking across its surface are detected, being visually checked by the sudden decrease of readings of the voltmeter, which is part of the test circuit, or by the noticeable heating of insulation.

10.4.4.5 In testing insulation strength, d.c. current may be used (from a rectified voltage installation). Cable products and some others depending on their design features may be exposed to d.c. tests. The distinction between those tests is in the values of the testing voltage which are specified for each particular product.

10.4.5 Tests of interturn insulation strength.

10.4.5.1 Windings of electrical machines, transformers, electromagnetic couplings, etc. are subject to interturn tests.

10.4.5.2 The interturn insulation of electrical machine (electromagnetic coupling) windings is tested when the one runs idle. The tests are carried out in the heated machine (coupling) at a temperature near the maximum reached during the heat test. The test voltage shall be equal to 1,3 times the rated voltage. The test duration is 3 min (5 min for turbogenerators) unless otherwise specified.

10.4.5.3 The interturn insulation of voltage transformer windings is tested by the twofold rated voltage (of higher frequency), which value is specified in 10.4.6.2.1.

10.4.5.4 The results of interturn insulation tests are considered satisfactory if no insulation breakdown or damage has happened.

10.4.5.5 For asynchronous motors powered by semi-conducting frequency convertors the insulation voltage impulse tests of winding shall be carried out in accordance with standard IEC 60034-15.

10.4.6 Testing insulation strength of single types of equipment.

10.4.6.1 Electrical machines and electromagnetic couplings.

10.4.6.1.1 The insulation of electrical machine windings in compliance standard IEC with 60034-1 shall withstand without breakdown or damage the test voltage of which the root-mean square values are specified in Table 10.4.6.1.1.

Table 10.4.6.1.1

Nos	Electrical machine or its part	Test voltage (root-mean square value), in V
1	Insulated windings of rotating machines of rated output less than 1 kW (or kVA) and of rated voltage less than 100 v with the exception of those in items 4 to 8	500 V + twice the rated voltage
2	Insulated windings of rotating machines of rated output less than 10000 kW (or kVA) with the exception of those in item 1 and items 4 to 8 (Note 1)	1 000 V + twice the rated voltage with a minimum of 1500 V (Note 1)
3	Insulated windings of rotating machines of output less than 10000 kW (or kVA) or more with the exception of those in items 4 to 8	1 000 V + twice the rated voltage
4	Separately excited field windings of d.c. machines	1 000 V + twice the rated voltage with a minimum of 1500 V
5	Field windings of synchronous generators, synchronous motors and synchronous condensers	
5a)	Rated field voltage: up to, and including 500 V, above 500 V.	Ten times the rated field voltage with a minimum of 1500 V 4000 V + twice the rated field voltage
5b)	When a machine is intended to be started with the field winding short-circulated or connected across a resistance of value less than ten times the resistance of the winding	Ten times the rated field voltage with a minimum of 1500 V and maximum of 3500 V
5c)	When a machine is intended to be started either with the field winding connected across a resistance of value equal to, or more than, ten times the resistance of the winding, or with the field windings on open circuit with or without a field-dividing switch	1000 V + twice the maximum value of the r.m.s. voltage, which can occur under the specific starting conditions, between the terminals or the field winding or in the case of a sectionalized field winding between the terminals of any section, with a minimum of 1500 v (Note 2)
6	Secondary (usually rotor) windings of induction motors or synchronous induction motors of not permanently short-circulated (e.g. if intended rheostatic starting)	
6a)	For non-reversing motors or motors reversible from standstill only	1000 V + twice the open-circuit standstill voltage as a measured between ship-rings or secondary terminals with rated voltage applied to the primary windings
6b)	For motors to be reversed or braked by reversing the primary supply while the motor is running	1000 V + four times the open-circuit standstill secondary voltage as defined in item 6a)
7	Exciters (except as below) Exception 1: exciters of synchronous motors (including synchronous induction motors) if connected to earth or disconnected from the field windings during starting Exception 2: separately excited field windings of exciters (see item 4)	As for the windings to which they are connected 1 000 V + twice the rated exciter voltage, with a minimum of1 500 V

Nos	Electrical machine or its part	Test voltage (root-mean square value), in V
8	Electrically interconnected machines and apparatus	A repetition of the tests in items 1 to 7 above should be avoided if possible, but if a test is performed on a group of machines and apparatus, each having previously passed its withstand voltage test, the test voltage to be applied to such an electrically connected arrangement shall be 80 % of the lowest test voltage appropriate for any individual piece of the arrangement (Note 3)
9	Devices that are in physical contact with windings, for example, temperature detectors, shall be tested to the machine frame. During the withstand test on the machine, all devices in physical contact with the winding shall be connected to the machine frame.	1500 V
Notes: 1. For two-phase windings having one terminal in common, the voltage in the formula shall be the highest r.m.s. voltage arising between any two terminals during operation. 2. The voltage occurring between the terminals of the field windings, or sections thereof, under the specified starting conditions, may be measured at any convenient reduced supply voltage, and the voltage so measured shall be increased in the ratio of the specified starting supply voltage to the test supply voltage. 3. For windings of one or more machines connected together electrically, the voltage to be considered is the maximum voltage that occurs in relation to earth.		

10.4.6.1.2 Additionally to the tests given in Table 10.4.6.1.1, electrical machines and electromagnetic couplings shall have their interturn insulation tested according to 10.4.5.2 with due regard for the following:

.1 machines operating within a certain range of voltage shall withstand the interturn insulation test for a voltage equal to at least 1,3 times the highest level of voltage;

.2 if the off-load voltage of synchronous machines (excepting turbogenerators) at the rated exciting current exceeds 1,3 times the rated voltage, the test shall be carried out at that higher off-load voltage corresponding to the rated exciting current;

.3 if a field system of synchronous machines includes a power transformer, the interturn insulation of the latter is tested along with the machine winding insulation at the same voltage;

.4 the interturn insulation of three-phase multispeed motors shall be tested for each speed;

.5 if the test voltage increased up to 1,3 U_r results in the impermissible rise of voltage between the bars of d.c. motors with more than four poles, tests may be carried out at the lesser value of the test voltage than that specified in the approved technical documentation for the machine;

.6 if the voltage of a field-forced exciter exceeds 1,3 times the rated voltage, the test shall be carried out at the maximum forced voltage during 1 min.

10.4.6.2 Transformers.

10.4.6.2.1 In testing of winding insulation for transformers rated at up to 1000 V at the firm (manufacturer), the windings shall withstand the test voltage of rms values given in Table 10.4.6.2.1.

Table 10.4.6.2.1

Transformers	Rated voltage of windings, in V	Test voltage, in kV
Power ones:		
three-phase rated at up to 6,3 kVA	Up to 50	1,0
single-phase rated at up to 4,0 kVA	51 – 250	1,5
	251 – 400	2,0
	401 – 660	2,5

Transformers	Rated voltage of windings, in V	Test voltage, in kV
	661 – 1000	3,0
three-phase rated over 6,3 kVA	127 – 1000	3,0
single-phase rated over 4,0 kVA	127 – 1000	3,0

10.4.6.2.2 The interturn insulation of transformer windings is tested by the twofold rated voltage of higher frequency applied to terminals of one of the windings with the others being open-circuited.

The test duration *t*, in min, shall be at least as determined from the formula

$$t = 2f_r/f, \qquad (10.4.6.2.2)$$

where f_r = rated frequency, in Hz;
f = higher frequency of the test voltage equal to $2f_r$ to $5f_r$ (any value within these limits).

In all other cases, the test duration is at least 15 s.

10.4.6.3 Accumulator batteries.

10.4.6.3.1 Insulation of accumulator batteries regardless of battery rated voltage shall be tested by 2000 V (rms value).

10.4.6.4 Electrical switchgear, busducts and apparatus.

10.4.6.4.1 The insulation of electrical (switching, protective, control) apparatus, switchboards and consoles, busducts, lighting fixtures for a voltage of up to 1000 V shall withstand without breakdown and tracking the test voltage applied of which rms values are as follows:

VOLTAGE, V

Rated voltage of apparatus by insulation, U_r, in V	Test voltage (rms value), in V
60	1000
60 – 250	2000
251 – 660	2500
661 – 800	3000
801 – 1000	3500
1001 – 3000	$3U_r$

N o t e s: 1. In testing switchboards, consoles, busducts, their accessories previously tested independently for insulation strength may be disconnected. Instead of disconnecting such elements, the test voltage may be reduced by 20 % as compared with the above.

2. The test voltage for apparatus rated over 3 kV is specified in a separate table of this Section.

3. The insulation of electromagnetic releasing machinery windings is tested at arms value of 2000 V.".

10.4.6.4.2 The test voltage for fuses insulation up to 500 V rating shall be 3000 V.

10.4.6.4.3 Capacitors shall withstand the test voltage applied between connected armatures and the body, of which rms values are given below, and between the armatures, according to 10.4.6.9:

Rated voltage of a capacitor, U_r , in V	Test voltage (rms value), in V
220	3000
380	3000

500 3000
660 6000
1000 6000
3150 16000
6300 22000

10.4.6.5 Ship's control and monitoring, electrical internal communication and alarm devices.

10.4.6.5.1 Insulation strength of ship's control and monitoring, electrical internal communication and alarm devices shall withstand the test voltage of the following rms values:

Rated voltage of a device, U_r , in V	Test voltage (rms value), in V
up to 60	500 + 2 U_r
61 – 250	1500
251 – 380	2000

10.4.6.5.2 The test voltages in 10.4.6.5.1 do not apply to tachometer sensors for which the voltages specified in 10.4.6.1.1 (for tachometer sensors) and 10.4.6.4.1 (for secondary devices of meters) shall be applied.

10.4.6.6 Cable products.

10.4.6.6.1 Each insulated core of a finished cable shall withstand without breakdown during 5 min the application of an a.c. single-phase sinusoidal voltage having a frequency of 50 (60) Hz or the d.c. voltage specified in Table 10.4.6.6.1. These test voltages for a finished cable are used both after products holding in water and without such holding, in testing with an immersion into water and without the immersion.

Table 10.4.6.6.1

Cables	Test voltage, in V	
	A.c. 50 (60) Hz current	D.c. current
Power cables for rated voltage, V:		
250	1500	3000
750	2500	5000
1000	3000	–
3000	7000	–
Alarm and communication cables for rated voltage 250 V	1500	3000
Notes: 1. The Table refers to cables having rubber, PVC and polyethylene insulation in a rubber or PVC sheath. 2. The test voltage for the cables of which the rated is ignored in the Table is stipulated by technical documentation in compliance with national and international standards. 3. The test voltage may be reduced by 25 per cent as compared with the one in the Table for cables with screened cores if these latter account for more than 50 per cent of all the cores.		

10.4.6.6.2 All the insulated cores of a cable prior to its lay, as well as installation single-core wires with no sheathing shall additionally withstand without breakdown the application of the sinusoidal 50 Hz test voltage of a rms value specified in Table 10.4.6.6.2.

The duration of being at the test voltage for each point of the insulation in such a test shall be at least 0,1 s.

Table 10.4.6.6.2

Cables	Nominal cross-sectional area of a core, in mm^2	Test voltage (rms value) for cables and wires for rated voltage, in V	
		250	750
Power	0,75 – 16	6000	10000

Cables	Nominal cross-sectional area of a core, in mm^2	Test voltage (rms value) for cables and wires for rated voltage, in V	
		250	750
	16 – 25	8000	10000
	over 25	10000	12000
Telephone	–	4000	–

10.4.6.7 Electrical heating and cooking appliances.

10.4.6.7.1 Electrical heating and cooking appliances with tubular electric heaters, excepting fuel oil and lubricating oil heaters, shall withstand the test voltage of which rms values are specified in Table 10.4.6.7.1.

10.4.6.7.2 Fuel oil and lubricating oil heaters for rated voltages 220 V and 380 V shall be tested at a voltage of 2000 V in a cold state and 1500 V in the state heated up to a working temperature.

Table 10.4.6.7.1

Rated voltage of a heating device, in V	Test voltage (rms value), in V		
	In practically cold state		Heated up to a working tempe-rature irrespective ot the tubular electric heater diameter
	tubular electric heater diameter up to 10 mm	tubular electric heater diameter over 10 mm	
12 – 60	800	1000	600
110 – 127	1300	1500	1200
220	1500	1700	1200
380	1800	2000	1200
Note. The above voltages may be reduced by 20 per cent in tests of heating and cooking appliances with tubular electric heaters being tested at the firm (manufacturer).			

10.4.6.8 Electrical measuring instruments.

10.4.6.8.1 Analog and digital devices for measuring electrical quantities, transducers, as well as components of devices for measuring nonelectric quantities, if an electric quantity is fed to the input of these components, are classed with the electrical quantity measuring devices covered by the requirements of para10.4.6.8.2.

10.4.6.8.2 The insulation of measuring instruments designed for various operating voltages shall withstand the test voltage of which rms values are given below:

Operating voltage, in V Test voltage (rms value), in V

Up to .....130 – 500
131 – 250 1500
251 – 660 2000
661 – 1000 3000
over 1001 ..... in compliance with national and international standards

Notes: 1. The above voltages are taken for testing insulation between current-carrying parts and a device case.

2. D.c. current may be used for tests. In this case, the above voltages shall be increased 1,41 times.

10.4.6.9 Capacitor sets to raise a power factor.

Capacitor sets to raise a power factor (cos φ) shall withstand the test voltage of an a.c. sinusoidal current of 50 Hz between armatures applied to their terminals during 10 s and equal to 2,15 times the rated voltage, or the d.c.voltage equal to 4,3 times the rated one.

10.5 TESTS OF EQUIPMENT FOR COMPLIANCE WITH OPERATIONAL CONDITIONS ONBOARD A SHIP

10.5.1 General.

10.5.1.1 The list of electrical equipment products subjected to various kinds of mechanical and environmental tests is given in Table 10.5.1.1.

10.5.1.2 For single large-sized or heavy products which are impractical for testing on standard test benches and in standard test chambers instead of maritime full scale tests, calculation data regarding mechanical, and environmental effects according to the procedures approved by the Register, or in compliance with national or international standards may be introduced.

Table 10.5.1.1

Tests of equipment for compliance with operational conditions onboard a ship

Products	Mechanical tests for				Environmental tests for								Tests of enclosure protection
	Vibration tests	Shock tests	Resistance to motions	Resistance to prolonged inclinations	Heat stability	Cold endurance	Exposure to temperature changes	Humidity resistance	Resistance to hoarfrost and dew after thawing	Resistance to salt mist	Resistance to solar radiati	Fungus resistance	
Electrical machines	+	+	(+)	+	+	+	(+)	+	(+)	(+)	(+)	(+)	+
Transformers	+	+	(+)	(+)	+	+	–	+	–	(+)	–	(+)	(+)
Static converters	+	+	(+)	–	+	+	–	+	–	(+)	–	(+)	
Switch, protective and control appratus	+	+	+	+	+	+	(+)	+	(+)	(+)	–	(+)	(+)
Electrical measuringinstruments	+	+	(+)	+	+	+	–	+	–	(+)	+	(+)	+
Electrical switch-boards and consoles	+	+	(+)	(+)	+	+	(+)	+	(+)	(+)	(+)	(+)	+
Enclosures of switchgear, switch-boards and consoles of electrical installations, monitoring and alarm	+	+	–	–	+	+	(+)	+	(+)	(+)	(+)	(+)	+
Electrical drives	+	+	(+)	+	+	+	(+)	+	(+)	(+)	(+)	(+)	+
Ship's control and monitoring devices	+	+	(+)	+	+	+	(+)	+	(+)	(+)	(+)	(+)	+
Internal communication and alarm devices and apparatus	+	+	+	(+)	+	+	(+)	+	(+)	(+)	(+)	(+)	+
Electrical heating and cooking appliances	+	+	(+)	(+)	+	+	–	+	–	(+)	–	(+)	
Accumulators and accumulator batteries	+	+	+	+	+	+	–	–	–	(+)	–	(+)	–
Capacitors and capacitor sets to raise a power factor	+	+	(+)	(+)	+	+	–	+	–	(+)	–	(+)	(+)
Lighting fixtures	+	+	–	(+)	(+)	(+)	(+)	+	(+)	(+)	–	(+)	(+)
Wiring accessories	+	+	–	–	(+)	+	–	+	(+)	(+)	(+)	(+)	(+)
Cables and wires	(+)	(+)	–	–	+	+	–	+	–	(+)	(+)	(+)	–
Busducts	+	+	(+)	(+)	+	+	–	+	–	(+)	–	(+)	(+)

Products	Mechanical tests for				Environmental tests for								Tests of enclosure protection
	Vibration tests	Shock tests	Resistance to motions	Resistance to prolonged inclinations	Heat stability	Cold endurance	Exposure to temperature changes	Humidity resistance	Resistance to hoarfrost and dew after thawing	Resistance to salt mist	Resistance to solar radiati	Fungus resistance	
Symbols : " + " = products are subject to testing; " (+) " = the test is not compulsory for some products of the given type or, in some cases, the products may be exempted from this test (refer to the provisions on this test performance and on testing the products of the given type); " – " = the test is not needed.													

10.5.2 Definitions and explanations.

10.5.2.1 Vibration strength of equipment means a capability of equipment to withstand the effect of vibration without damage retaining all parameters within the set limits after the vibration effect.

10.5.2.2 Vibration resistance of equipment means a capability of equipment to function under conditions of vibration with its parameters remaining within the set limits.

10.5.2.3 Humidity resistance means a capability of equipment to retain its parameters within the set limits on prolonged exposure to increased humidity.

10.5.2.4 Duration of impact momentum is the time while an acceleration of the same sign determined with regard to the impact momentum is acting.

10.5.2.5 Protection of equipment means a degree of protection of the equipment integrated in the enclosure against the penetration of solid foreign objects, and also a degree of protection of the electrical equipment inside the enclosure against the ingress of water.

10.5.2.6 Corrosion resistance means a capability of metal products of the equipment to withstand corrosion in the atmosphere saturated with aqueous salt (identical to sea salt) solutions.

10.5.2.7 Normal environmental conditions feature the following values of environmental factors:

.1 temperature 25±10 °C;

.2 relative humidity 60±30 per cent;

.3 atmospheric pressure 0,1±0,004 MPa.

10.5.2.8 Mould resistance (fungus resistance) means equipment capability to withstand the growth of fungus mould in the environment infected with fungus spores.

10.5.2.9 Practically steady temperature of a product means the temperature of the product or its part of which the change within 1 h does not exceed 1 °C provided the product loading and environmental temperature remain unchanged.

10.5.2.10 Practically cold state of a product means the state of the product wherein the temperature of any part of it differs from that of a cooling medium not more than by 3 °C.

10.5.2.11 Resonance is a phenomenon of increasing the amplitude of vibrations of the product or its units and parts two and more times as compared with that of fastening points vibrations, which is brought about at the coincidence of the disturbing force frequency with the resonance frequency of the product.

10.5.2.12 Resonance frequency is a frequency of natural vibrations of a product or its units wherein the resonance phenomenon with the product at large or its single units and parts develops.

10.5.2.13 Standard enviro nmental conditions feature the following values of environmental factors:

.1 temperature 20±1 °C;

.2 relative humidity 65±2 per cent;

.3 atmospheric pressure 0,1±0,004 MPa.

10.5.2.14 Thermal equilibrium of a product means the equilibrium that is considered as reached when the temperature of all parts of the product differs from the environmental temperature by not more than 3 °C.

10.5.2.15 Heat stability of equipment means a capability of equipment to function at the highest ambient air temperature, which is likely to occur in operational conditions, sustaining no damages and with its parameters remaining within the set limits.

10.5.2.16 Shock strength of equipment means a capability of equipment to withstand exposure to impacts without damage and with its parameters remaining within the set limits following the impacts.

10.5.2.17 Shock resistance of equi pment means a capability of equipment to perform its functions, while being impacted, with its parameters remaining within the set limits.

10.5.2.18 Cold endurance of equipment means a capability of equipment to function at the lowest ambient air temperature, which is likely to occur in operational conditions, sustaining no damages and corrosion, with its parameters remaining within the set limits.

10.5.2.19 Cycle of frequency sweeping means the variation of frequency from the lowest to the highest.

10.5.3 Mechanical tests.

10.5.3.1 General.

10.5.3.1.1 Products shall be fastened directly to the platform of a test bench or, if this is impractical, to a special fixture secured on it. The products shall be fastened in the same way as specifeid for their operation.

10.5.3.1.2 Shock-mounted products at all types of mechanical tests (excepting those for detecting resonance frequencies) shall be installed on shock-absorbers, but to be hard-mounted in tests for detecting resonance frequencies.

10.5.3.1.3 During the test by vibratory and impact loads, products shall be subjected to their effect in each of three mutually perpendicular directions. In all cases, one of those directions shall be perpendicular to the normal operational position of the product.

10.5.3.1.4 The tests of products for vibration resistance and vibration strength are carried out within the frequency range off 2^{+3}_{-0} – 100 Hz

10.5.3.1.5 The frequency standards specified in 10.5.3.1.4 refer to products having mass up to 200 kg. The equipment over 200 kg by mass, if it is made up of separate structurally-split blocks, sections, etc., may be subjected to tests by the block (section).

The documentation confirming the compliance of the equipment with the operating conditions specified in Part XI "Electrical Equipment" of the Rules for the Classification and Construction of Sea-Going Ships shall be submitted for unsplit equipment.

10.5.3.2 Vibration tests are carried out in compliance with standard IEC 60068 2 6, test Fc.

10.5.3.2.1 Frequency subbands, amplitudes and accelerations in vibration tests are specified in Table 10.5.3.2.1.

Table 10.5.3.2.1

Method 2 – according to IEC 60068-2-6, Test F_c

Frequency range, in Hz	Amplitude, in mm	Frequency of pass, in Hz	Acceleration *g*
for usual type of equipment			
2^{+3}_{-0} – 100	+1,0	13,2	+0,7
for equipment subject to increased vibration			
2^{+3}_{-0} – 100	+1,6	25,0	+4,0
Notes: 1. The test duration at each resonance frequency is at least 90 min. Where a number of resonance frequencies are detected close to each other, test duration shall be 120 min with continuous frequency variation within the detected range. 2. The test duration in case of no resonance condition is 90 min at 30 Hz in each plane.			

10.5.3.3 Shock tests are carried out in compliance with standard IEC 60068-2-27.

10.5.3.4 Tests for resistance to motions and prolonged inclinations.

10.5.3.4.1 During testing, the product shall be in an operating condition under normal environmental conditions.

The tests are not required for products without movable parts.

10.5.3.4.2 In tests for resistance to motions, the equipment is held in a motions condition sequentially in two mutually perpendicular positions with measurements of parameters in each position. A limiting angle of inclination in each position is 30° with the vertical to each side with a period of 7 s to 9 s.

10.5.3.4.3 The duration of tests in each position shall be sufficient for product monitoring and parameters measuring, but not less than 15 min.

10.5.3.4.4 In tests for resistance to prolonged inclinations, the product is held in an inclined position sequentially in two mutually perpendicular planes alternately to each of four sides by an angle of 22,5°, and emergency equipment, by an angle of 30° with the horizontal.

10.5.3.4.5 The duration of inclined product tests in an operating condition shall be sufficient for monitoring product operation and measuring parameters in each position, but not less than 5 min to each side.

10.5.3.4.6 The products of which the technical documentation contains the restrictions on their location onboard a ship due to prolonged inclinations are tested taking into account such restrictions approved by the Register.

10.5.3.4.7 The product is considered to have passed the test if it functioned properly, maintained the set parameters and had no jammings, seizures or overheats of movable parts during testing.

10.5.4 Environmental tests.

10.5.4.1 Tests for heat stability are carried out in compliance with standard IEC 60068-2-2.

10.5.4.1.1 Lighting fixtures that are subjected to thermal tests with a higher degree of severity, as well as products that are subjected to heat tests, which, due to their dimensions, cannot be tested in a heating chamber, or which heat test temperature is higher than the thermal resistance test temperature are exempted from the tests for heat stability specified in the Chapter.

10.5.4.2 Tests for cold endurance are carried out in compliance with standard IEC 60068-2-1.

10.5.4.3 Tests for exposure to temperature changes.

10.5.4.3.1 To be tested are the products intended for installation on open decks.

10.5.4.3.2 The test procedure is as follows:

.1 a product is held in a humidity chamber during 5 days under conditions of stabilization time of the test for humidity resistance (95 – 100 % at a temperature of 25 °C);

.2 after the holding in the chamber during 2 – 3 h under normal environmental conditions, the product is subjected in succession to at least two cycles of the following tests:

gradual cooling in the chamber down to the temperature of – 25 °C;

switching-on under the rated load with a temperature at the end of tests elevated up to +55 °C).

On reaching the thermal equilibrium, the cycle is completed;

.3 after completing the last cycle, the product is placed in the humidity chamber and the test for humidity resistance is carried out in a full scope according to 10.5.4.4.

10.5.4.3.3 The test for exposure to temperature changes is recommended to combine with tests for heat stability and cold endurance.

The product is considered to have passed the tests if it had passed the test for humidity resistance performed immediately after the completion of the last cycle of the tests specified in 10.5.4.3.2.

10.5.4.4 Tests for humidity resistance. Tests for humidity resistance are carried out in compliance with standard IEC 60068-2-30, test Db.

10.5.4.5 Tests for exposure to hoarfrost and dew.

10.5.4.5.1 The products installed on open decks and in other places potential for hoarfrost formation on the product shall be tested for exposure to hoarfrost and dew.

The products of watertight construction and tested for humidity resistance in the cyclic mode are exempted from such tests.

10.5.4.5.2 The tests are carried out according to the following procedure:

.1 the switched-off product is placed in a cold chamber and held there during 2 h at a temperature of – 20±5 °C;

.2 the product is removed from the chamber and the voltage specified in a test program (the maximum permissible value of the operating voltage is considered as adequate) is applied to its terminals. The product is held at such voltage (no load) under normal environmental conditions till hoarfrost thawing and drying, but at least for 2 h;

.3 during the thawing, tests are carried out by applying the above voltage both between the leads, and between the leads and an enclosure.

10.5.4.5.3 The product is considered to have passed the test if no breakdown of, or damage to, the product insulation has occurred.

10.5.4.6 Tests for exposure to salt (sea) mist.

10.5.4.6.1 The products to be mounted on the open deck or in open spaces are subject to the test.

10.5.4.6.2 The products are tested in their standard enclosures with closed covers, doors, capped openings for cable entries. All the other holes, e.g. the ventilation ones, shall be opened.

10.5.4.6.3 The tests are performed by the cyclic atomization of an aqueous salt solution (sea mist) in a chamber at a temperature of 35±2 °C:

.1 cyclic atomization – during 2 hours followed by 7 days of storage, the cycle duration is 7 days, number of cycles is 4;

.2 solution composition, g/l: sodium chloride – 27, magnesium chloride – 6, calcium chloride – 1, potassium chloride – 1, distilled water – 1 l;

.3 mist dispersivity – 1 to 10 μm (up to 90 – 95 drops);

.4 water content of the solution – 2 to 3 g/m^2 (at the end of atomization).

10.5.4.6.4 Test methods and duration are specified in Table 10.5.4.6.4.

10.5.4.6.5 For products in metal casings with special coatings as well as metal components (glands, cable trays and ladders, cable ties etc.) it is allowed to perform accelerated cyclic tests for salt mist exposure by means of the cyclic spraying of aqueous salt solution (sea mist) at +27±2 °C:

.1 cyclic atomization – 15 min per h of test;

.2 solution composition – similar to 10.5.4.6.3.2;

.3 mist dispersivity – similar to 10.5.4.6.3.3;

Table 10.5.4.6.4

Nos.	Test sequence, conditions and standards	Numerical value
1	Initial measurement of insulation resistance and initial functional test	–
2	Installation of the equipment in the chamber and storage with cyclic spraying of the salt solution (salt mist)[1]:	
	temperature in the chamber, °C	35±2
	composition of synthetic solution of salt per 1 l of distilled water for making a salt mist, g/l	
	NaCl	27
	MgCl	6
	CaCl	1
	KCl	1
	dispersibility of salt mist (90 per cent drops), mc	1–5
	salt mist water content, g/m	2–3
	test duration, number of cycles[2]	4
	duration of solution spraying (at the beginning of each cycle), h	2
3	Recovery of equipment from the chamber, measurement of insulation resistance and carrying out functional tests	4–6

[1] During the test the equipment shall be switched off.
[2] Each cycle consists of the following stages: salt mist spaying, storage of the equipment in the chamber during 7 days, functional test on the 7th day of each storage period.

.4 water content of the solution – similar to 10.5.4.6.3.4;

.5 duration of test – 7 days.

10.5.4.7 Tests for mould growth.

10.5.4.7.1 All the products intended for continuous operation under tropical conditions (if all components of a product have passed such tests, the tests of the product in assembly may be omitted), shall be subjected to tests for mould growth.

10.5.4.7.2 The kinds of molds for preparing an aqueous suspension of mold spores are given in Table 10.5.4.7.2.

Table 10.5.4.7.2

Spore	Strain	Typical cultures	Properties
Aspergillus niger	v. Tieghem	ATCC. 6275	Flourishes on many materials, resistant to copper salts
Aspergillus terreus	Thom	POMD. 82j	Attacks plastics
Aureobasidium pullulans	(De Barry) Arnaud	ATCC. 9348	Attacks paints and varnishes
Penicellium funiculosum	Thom	JAM. 7013	Attacks many materials, textile materials in particular
Penicellium ochrochloron	Biourge	ATCC. 9112	Resistant to copper salts
Scopulariopsis brerioaulis	(Sacc.)	JAM. 5146	Attacks rubber
	Buin Var.		
	Glabra		
	Thon		
Trichoderma viride	Pers. Ex Fr	JAM. 5061	Attacks cellulose, textile, plastics
Paecilomyces varioti	Bainier	JAM. 5001	Attacks plastics and leather

10.5.4.7.3 The products are subjected to tests in compliance with standard IEC 60068-2-10 according to the following procedure:

.1 test specimens are selected among the supplied products without their special precleaning;

.2 prior to the beginning of tests, the equipment is held at a temperature of 55±2 °C during 4 to 6 h, whereupon under the standard environmental conditions for a period of 2 to 6 h during which electric parameters and product functioning are checked;

.3 the tests are performed in the special chamber of fungus formation in the environment infected with fungus mold in the absence of lighting and air movement at a temperature of (27 – 30) ±1 °C and relative humidity 95±3 per cent;

.4 the check Petri dish with a nutrient solution shall be in the chamber together with product specimens. As the nutrient solution is recommended the wort or Chapek – Dox's synthetic medium of the following composition:

sodium nitrate $NaNo_3$ – 2 g;
potassium dihydrophosphate KH_2PO_4 – 0,7 g;
potassium hydrophosphate K_2HPO_4 – 0,3 g;
magnesium sulfate $MgSO_47H_2O$ – 0,5 g;
potassium perchlorate KCl – 0,5 g;
ferrous sulfate FeSo47H2H – 0,01 g;
sucrose[1] – 30 g;
distilled water – 1000 cm^3;
agar-agar – 25 g;

.5 disconnected from power sources, the product and the Petri dish with the nutrient solution in the chamber are sprayed, using a glass pulverizer with an outlet diameter of at least 1 mm, with the aqueous suspension of mold fungus spores on the basis of 50 mg of the suspension for 1 l of the chamber volume.

The aqueous suspension shall consist of the mixture of mold fungus spores of which the names are given in Table 10.5.4.7.2;

.6 the equipment is held in the chamber under the above conditions during 48 h. If no growth of mold fungi in the check Petri dish is observed during that time, the spraying is repeated and the time-keeping is resumed from the beginning;

.7 following the display of fungi growth in the check Petri dish, the product is held in the chamber under the above environmental conditions during 28 days;

.8 after the expiry, the equipment is kept under the normal environmental conditions for 24 h followed by its inspection and parameters measurements.

10.5.4.7.4 The product specimens are considered to have passed the test if, resulting the inspection by the unaided eye, no noticeable growth of mold is revealed or single germinating spores only are seen on them with a 5X magnifying glass.

10.5.4.7.5 he tests for fungus resistance are performed at a microbiological laboratory by competent personnel.

The Surveyor may ignore the technical supervision of the tests, but their results shall be submitted in the form of a record and to be consistent with the above procedure.

10.5.4.8 Tests for exposure to solar radiation.

10.5.4.8.1 To be tested are the products designed for operation on the open deck and which will fully or partially be exposed to continuous solar radiation while in service.

10.5.4.8.2 The tests are carried out in a special chamber at an air temperature of 55±2 °C in the chamber shade. The product or its part is subjected to irradiation from infra-red and ultra-violet radiation sources during 120 h. The radiation plant intensity shall provide the total heat-flux density not less than 1125 W/m^2, the flux density of the ultra-violet part of the spectrum with a wave length of 280 to 400 nm shall be at least 42 W/m^2.

10.5.4.8.3 The product is considered to have passed the test if:

.1 no deformation, cracking, delamination, buckling, ungluing of parts made of plastic and other materials have occurred;

.2 parameters and insulation resistance have remained normal;

.3 visibility and distinguishability of inscriptions and symbols on scales or other parts of the product have not deteriorated.

---

1 If glucose is used instead of sucrose, the content is accordingly reduced.

10.5.5 Tests of enclosure protection.

10.5.5.1 Protection against penetration of hard objects.

10.5.5.1.1 These tests apply to products with voltage up to 1000 V.

Testing the degree of protection for voltage over 1000 V shall be in compliance with IEC standard 60529.

Testing the protection degree of rotation electrical machines shall be in compliance with IEC standard 60034-5.

10.5.5.1.2 The protection degree against penetration inside the product of foreign hard objects is checked during the tests.

10.5.5.1.3 The designation of the protection degree and its definition are specified in Appendix 9.

The test procedure for product enclosures for the conformity of the protective enclosure regarding the penetration inside the product of foreign hard objects and criteria for tests assessment are given in Table 10.5.5.1.3.

Table 10.5.5.1.3

Degree of protection (first numeral after IP)	Test procedure and assessment criteria
1	A rigid sphere 50 mm in diameter is applied to any holes in the product enclosure with a force of 50 N ±10 %. The results are considered satisfactory if the sphere does not pass through and touch current-carrying parts inside the product.
2	A test probe (refer to Appendix 10) connected to a safety voltage (not below 40 V) source is applied in any possible position with a force of 10 N ±10%, as well as a rigid sphere 12,5 mm in diameter is applied to any holes with the 30 N ±10%. The results are considered satisfactory if the pilot lamp of the probe does not illuminate, and the probe does not get through any of the holes and touch current-carrying or moving parts inside the product enclosure.
3	A rigid steel wire of 2,5 mm in diameter is applied to any hole in the enclosure with a force of 3 N ±10 %. The results are considered satisfactory if the wire does not get through any of the holes in the enclosure.
4	Similar, the wire diameter is 1 mm and force applied 1N ±10 %.
5	Enclosures are of necessity in one of two categories: Category 1: Enclosures where the normal working cycle of the equipment causes reductions in air pressure within the enclosure below that of the surrounding air, for example, due to thermal cycling effects. Category 2: Enclosures where no pressure difference relative to the surrounding air is present. The enclosure shall be deemed category 1 unless the relevant product standard for the equipment specifies that the enclosure is category 2. **Test of Category 1 enclosures.** The enclosure is supported inside the test chamber and the pressure inside the enclosure is maintained below the surrounding atmospheric pressure by a vacuum pump. The suction connection shall be made to a hole specially provided for this test. If not otherwise specified in the relevant product standard, this hole shall be in the vicinity of the vulnerable parts. If it is impracticable to make a special hole, the suction connection shall be made to the cable inlet hole. If there are other holes (for example, more cable inlet holes or drain holes) these shall be treated as intended for normal use on site. The product is blown over with talc screened through a mesh with a clear opening of 75 μm and wire thickness of 50 μm on the basis of 2 kg of talc per 1 m^3 of the chamber volume. The talc applied during the test shall not be use more than 20 tests. The object of the test is to draw into the enclosure, by means of depression, a volume of air 80 times the volume of the sample enclosure tested without exceeding the extraction rate of 60 volumes per hour. In no event shall the depression exceed 2 kPa (20 mbar) on the manometer. If an extraction rate of 40 to 60 volumes per hour is obtained the duration of the test is 2 h.

Degree of protection (first numeral after IP)	Test procedure and assessment criteria
	If, with a maximum depression of 2 kPa (20 mbar), the extraction rate is less than 40 volumes per hour, the test is continued until 80 volumes have been drawn through, or a period of 8 h has elapsed. Tests of Category 2 enclosures. The enclosure under test is supported in its normal operating position inside the test chamber, but is not connected to a vacuum pump. Any drain-hole normally open shall be left open for the duration of the test. The test shall be continued for a period of 8 h. If it is impracticable to test the complete enclosure in the test chamber, one of the following procedures shall be applied: – testing of individually enclosed sections of the enclosure; – testing of representative parts of the enclosure, comprising components such as doors, ventilation openings, joints, shaft seals, etc., in position during test; – testing of a smaller enclosure having the same full-scale design details. In the last two cases, the volume of air to be drawn through the enclosure under test shall be the same as for the whole enclosure in full scale. The protection is satisfactory if, on inspection, talcum powder has not accumulated in a quantity or location such that, as with any other kind of dust, it could interfere with the correct operation of the equipment or impair safety. No dust shall deposit where it could lead to tracking along the creepage distances.
6	The enclosure shall be deemed category 1, whether reductions in pressure below the atmospheric pressure are present or not. The test shall be carried out as for the enclosure of Category 1 (degree 5X). The protection is satisfactory if no deposit of dust is observable inside the enclosure at the end of the test (complete protection against penetration of dust).

10.5.5.1.4 If complete equipment is impractical to test, main parts of the equipment or smaller equipment but having full-scale structural parts subject to testing shall be tested.

10.5.5.2 Water protection.

10.5.5.2.1 The test procedure and the provisions on the assessment of testing the protective product enclosure against the ingress of water are given in Table 10.5.5.2.1. Testing the degree of protection shall be in compliance with IEC standard 60529.

Table 10.5.5.2.1

Degree of protection (second numeral after IP)	Test procedure and assessment criteria
1	Protection against vertically-falling water drops. The product in a normal working position is placed on a turntable. The turntable on which the enclosure is placed has a rotation speed of 1 r/min and the eccentricity (distance between turntable axis and specimen axis) is approximately 100 mm. The enclosure under test is placed in its normal operating position under the drip box, the base of which is larger than that of the enclosure. Except for enclosures designed for wall or ceiling mounting, the support for the enclosure under test should be smaller than the base of the enclosure. The enclosure is exposed to vertically-falling water drops from a tank with water through holes in its bottom arranged at nodes of an imaginary net with a mesh dimensioned 20 mm. The area of the bottom shall be larger than that of the product under test. An enclosure normally fixed to a wall or ceiling is fixed in its normal position of use to a wooden board having dimensions which are equal to those of that surface of the enclosure which is in contact with the wall or ceiling when the enclosure is mounted as in normal use. Water temperature shall not differ from the temperature of tested item by more than 5 °C Delivery rate is to be 1 mm/min. The duration of test is 10 min. The test results are considered satisfactory if water drops penetrating the product do not break its normal functioning and water does not accumulate in single places and close to cable entries.

Degree of protection (second numeral after IP)	Test procedure and assessment criteria
2	Protection against water drops. Tests are conducted in the same way as for degree of protection 1 herewith table on which the enclosure is placed does not turn as in the case of the test for the second characteristic numeral 1. Tilt angle for each position is 15° on either side of the vertical in two mutually perpendicular planes. The enclosure is tested for 2,5 min in each of four fixed positions of tilt. Delivery rate is to be 3 mm/min. The total duration of the test is 10 min. The assessment of test results is also as above.
3	Protection against rain drops. Tests with oscillating tube or spray nozzle in accordance with the standard for a specified product. **Tests with oscillating tube.** The product in a normal working position is sluiced with fine water jets from holes in a pipe bent in the shape of a semicircle. The support for enclosure shall not be perforated. The enclosure to be tested is placed at the centre point of the semicircle. The tube is caused to oscillate through an angle of 120°, 60° on either side of the vertical, the time for one complete oscillation (2 × 120°) being about 4 s and the test duration being 5 min. The enclosure is then turned through a horizontal angle of 90° and the test is continued for a further 5 min. An average rain intensity per one hole is 0,07±5 % l/min. The number of holes is defined depending on the tube radius. The maximum acceptable radius of the oscillating tube is 1 600 mm. **Tests with spray nozzle.** The product in a normal working position is sprayed at an angle of ±60° vertically to the spray nozzle on the maximum distance of 200 mm. For this test the counterbalanced shield is installed at 30°. Average delivery rate is 10±5 % l/min. The water pressure is adjusted to give the specified delivery rate in the range of 50 –150 kPa. The pressure shall be kept constant during the test. The test duration is 1 min/m^2 of the calculated surface area of the enclosure (excluding any mounting surface), with a minimum duration of 5 min. The test results are assessed as for the protection degree 1.
4	Similar to the protection degree 3 but with specifications. **Tests with oscillating tube.** The oscillating tube has spray holes over the whole 180° of the semicircle. The tube is caused to oscillate through an angle of almost 360°, 180° on either side of the vertical, the time for one complete oscillation (2× 360°) being about 12 s. The duration of the test is 10 min. If not specified otherwise in the relevant product standard, the support for the enclosure under test is perforated so as to avoid acting as a baffle and the enclosure is sprayed from every direction by oscillating the tube to the limit of its travel in each direction. **Tests with spray nozzle.** The counterbalanced shield is removed from the spray nozzle and the enclosure is sprayed from all practicable directions. The test results are assessed as for the protection degree 1.
5	Protection against water jets. The test is made by spraying the enclosure from all practicable directions with a stream of water from a test nozzle. The conditions to be observed are as follows: – internal diameter of the nozzle: 6,3 mm; – delivery rate: 12,5 l/min ±5 %; – water pressure: to be adjusted to achieve the specified delivery rate; – core of the substantial stream: circle of approximately 40 mm diameter at 2,5 m distance from nozzle; – test duration per square metre of enclosure surface area likely to be sprayed: 1 min; – minimum test duration: 3 min; – distance from nozzle to enclosure surface: between 2,5 m and 3 m. The test results are assessed as for the protection degree 1.

Degree of protection (second numeral after IP)	Test procedure and assessment criteria
6	Protection against ship's deck conditions (protection against high pressure water jet). The test is made by spraying the enclosure from all practicable directions with a stream of water from a test nozzle. The conditions to be observed are as follows: – internal diameter of the nozzle: 12,5 mm; – delivery rate: 100 l/min ±5 %; – water pressure: to be adjusted to achieve the specified delivery rate; – core of the substantial stream: circle of approximately 120 mm diameter at 2,5 m distance from nozzle; – test duration per square metre of enclosure surface area likely to be sprayed: 1 min; – minimum test duration: 3 min; – distance from nozzle to enclosure surface: between 2,5 m and 3 m. The test results are assessed as for the protection degree 1.
7	Protection against immersion in water. The test is made by completely immersing the enclosure in water in its service position as specified by the manufacturer so that the following conditions are satisfied: a) the lowest point of enclosures with a height less than 850 mm is located 1 000 mm below the surface of the water; b) the highest point of enclosures with a height equal to or greater than 850 mm is located 150 mm below the surface of the water; c) the duration of the test is 30 min; d) the water temperature shall not differ from that of the equipment by more than 5 °C. The water shall not penetrate the enclosure at specified pressure and time. For electrical machines the test shall be replaced by the following: – the machine shall be tested with an inside air pressure of about 10 kPa (0,1 bar); – the duration of the test is 1 min. The test is deemed satisfactory if no air leaks are found during the test. Air leakage may be detected either by submersion, the water just covering the machine, or by the application onto it of a solution of soap in water.
8	Unless there is a relevant product standard, the test conditions are subject to agreement between manufacturer and user, but they shall be more severe than those for degree of protection 7 and they shall take account of the condition that the enclosure will be continuously immersed in actual use.

N o t e s : 1. Electrical machines having degrees of protection 1, 2, 3 and 7 are tested in a nonoperating condition, while those with degrees of protection 4, 5 and 6, in both an operating and a non-operating conditions. The duration of each test is at least 10 min.

2. Following product enclosure tests against water penetration, electrical machines are immediately subjected to tests for insulation strength.

If tests are carried out on non-rotating machines, prior to insulation strength testing, these latter shall be operational under idling conditions for 15 min. The test voltage therewith shall make up 50 % of the normal test voltage, but at least 125 % of the rated voltage.

Electrical equipment designed for underwater operation regarding its structure and insulation is considered equivalent to the degree of protection 8.

An enclosure designed with the second characteristic numeral 0 to 6 means simultaneous compliance with all requirements for smaller numerals.

10.6 ELECTRICAL TESTS

10.6.1 Heat test.

10.6.1.1 The test of electrical machines for heating shall be carried out under the normal environmental conditions at an air temperature of 25±10 °C up to a steady-state temperature.

The test for heating may be combined with the test for heat stability.

10.6.1.2 In testing, a product shall operate in a nominal mode.

10.6.1.3 Products intended for operation in a short-time mode shall be tested being from the start in a practically cold state. The test duration shall be not less than that of the mode specified for product operation.

The other produts may be tested starting both with the practically cold state and hot state. The test continues until practically steady-state temperature.

10.6.1.4 The test of products designed for supply by three-phase current (e.g. of switching devices of which the poles therewith are connected in series) may be carried out by single-phase current at currents up to 400 A.

10.6.1.5 The product shall be tested in an operational position.

10.6.1.6 During tests, the opening parts of enclosures (doors, covers, detachable casings, etc.), as well as holes for cable entries shall be in a regular operational position.

10.6.1.7 The parts to be monitored in heating shall be specified in the product test program and procedure.

10.6.2 Overcurrent test.

10.6.2.1 Generators after heating up to the steady-state temperature corresponding to the rated load shall withstand overcurrent loads specified in Table 10.6.2.1.

Table 10.6.2.1

Generator	Overcurrent, per cent, I_{rated}	Overcurrent duration, in s
Alternating current	50	120
Direct current	50	15

10.6.2.2 Electric motors shall withstand torque overloads specified in Table 10.6.2.2 without a stop or sudden speed change.

Table 10.6.2.2

Electric motors	Torque overload, in %	Overload duration, in s	Comments
Polyphase synchronous, as well as squirrel-cage motors with a starting current less than a 4,5-fold rated current	50	15	Frequency, voltage and excitation shall be maintained at the level of rated values
Polyphase squirrel-cage and slip-ring induction motots for continuous and intermittent operation	60	15	Frequency and voltage shall be maintained at the level of rated values
As above, but for short-time operation and for continuous operation under variable load	100	15	Ditto
D.c. motors	50	15	Voltage shall be maintained at the level of a rated value

10.6.2.3 The test shall be performed at the maximum values of the temperature of product parts reached in the heat test and at the same temperature of a cooling medium.

10.6.2.4 The product is considered to have passed the test if, after its inspection following the test, no deformations, damages, noticeable changes of an insulation colour have been detected, and product parameters have remained within the set limits.

10.6.3 Tests in checking radio interference level.

10.6.3.1 The check of the voltage level and field strength of radio interference generated by equipment is carried out with use of devices with a quasi-peak detector specified in CISPR 16-1 and 16-2, GOST P 51319-99 in compliance with the procedure set forth in 12.6.14, Section 12. The bandwidth of a radio interference meter shall be 200 Hz in the frequency range 0,01 to 0,15 MHz, 9 kHz in the frequency range 0,15 to 30 MHz, and 120 kHz in the frequency range 30 to 2000 MHz excepting the range 156 to 165 MHz where the bandwidth shall be 9 kHz.

10.6.3.2 The following tolerable levels of radiated electromagnetic emission are set for the equipment installed on the open deck and navigation bridge.

An electromagnetic field at a distance of 3 m in the following frequency ranges shall be:

150 to 300 kHz – 80 to 52 dB μV/m;

300 kHz to 30 MHz – 52 to 34 dB μV/m;

30 MHz to 2000 MHz – 54 dB μV/m, but 24 dB μV/m for the frequency range 156 to 165 MHz.

The voltage of emission in supply and input-output circuits measured with use of the artificial mains network according to CISPR 16 in the following frequency ranges shall be:

10 to 150 kHz – 96 to 50 dB μV/m;

150 to 350 kHz – 60 to 50 dB μV/m;

350 kHz to 30 MHz – 50 dB μV/m.

10.6.3.3 The following tolerable levels of radiated electromagnetic emission are set for the equipment installed in the machinery and other enclosed spaces of a ship.

An electromagnetic field at a distance of 3 m in the following frequency ranges shall be:

150 kHz to 30 MHz – 80 to 50 dB μV/m;

30 to 100 MHz – 60 to 54 dB μV/m;

100 to 2000 MHz – 54 dB μV/m, but 24 dB μV/m for the frequency range 156 to 165 MHz.

The voltage of emission in supply and input-output circuits measured with use of the artificial mains network according to CISPR 16-2 in the following frequency ranges shall be:

10 to 150 kHz – 120 to 69 dB μV/m;

150 to 500 kHz – 79 dB μV/m;

500 kHz to 30 MHz – 73 dB μV/m.

10.6.4 Tests for immunity to electromagnetic emission (EMC).

10.6.4.1 The check of equipment immunity to electromagnetic emission is carried out in accordance with the procedure set forth in 12.6.15.1 – 12.6.15.6, Section 12.

10.7 ELECTRICAL TESTS OF PARTICULAR TYPES OF EQUIPMENT

10.7.1 Tests of electrical machines.

10.7.1.1 The scope of tests and checks for electrical machines is given in Table 10.7.1.1.

10.7.1.2 Additionally to the specified in 10.4.1, the following shall be checked:

.1 the quantity and symmetry of an air gap between a stator and rotor (between poles and an armature);

.2 the axial symmetry of the stator and rotor (of poles and the armature);

.3 the uniformity of poles and brushes arrangement in a circle;

.4 a brush pressure;

.5 the runout of a collector, slip rings, a shaft end, the axial displacement of the rotor (armature) (it is expediently also to check the runout of the collector after a test at a higher speed);

.6 the results of the test of a water air cooler, as well as of the systems of direct water cooling of the machine, for tightness and strength;

.7 the results of measuring the resistance of insulation between a bearing base and a foundation;

.8 the results of measuring the ohmic resistance of windings.

10.7.1.3 If large-dimension assembled machines are impractical to test for humidity resistance, these may be tested in knock-down form (e.g. separate tests of armatures, rotors and parts of split stators). In such cases, the values of insulation resistance received in measurements after testing shall be referred (converted) to the machine as a set.

Table 10.7.1.1

Electrical machines	Technical inspection and checks	Measurements of insulation resistance	Tests of insulation strength	Tests for conformity with operational conditions	Heat test	Short-time overcurrent test	Short-time torque overload test	Check of commutator machines switching	Stalling test	Overspeed test	Test for electric and thermal strength at short-circuit current	Test for permissible levels of industrial radio interference voltages [3]	Check of operability at load loss and increase	Check of operability with load variation from idling to rated load	Other tests and checks
A.c.synchronous generators	+	+	+	+	+	+	–	–	–	+	+	+	+	+	Refer to 10.7.1.11
D.c. generators[1]	+	+	+	+	+	+	–	+	–	+	–	+	–	–	
A.c. induction motors	+	+	+	+	+	+	+	–	+[2]	+	–	+	–	–	
D.c. motors	+	+	+	+	+	+	+	+	+[2]	+	–	+	–	–	
Converters	+	+	+	+	+	+	–	(+)	–	+	(+)	+	–	–	
Rotary amplifiers	+	+	+	+	+	+	–	+	–	+	–	+	–	–	
Other machines	+	+	+	+	+	(+)	(+)	(+)	–	(+)	(+)	+	–	–	

Symbols:
" + " = test (check) is needed;
"(+)" = test (check) performance depends on the particular machine;
" – " = test (check) is not needed.

[1] Exciters of synchronous machines may be tested in combination with these machines.
[2] The stalling test is applied only to propulsion motors, motors for a direct drive of the rudder and steering gear, and also to motors driving anchor and mooring machinery.
[3] Tests are carried out in compliance with standard IEC 60034-1 (para13).

10.7.1.4 In testing a.c. generators for a short-time overcurrent, it is recommended to simultaneously check the sufficiency of their excitation reserve. The check is carried out at a power factor of 0,6 (cos φ).

The excitation reserve is considered sufficient if the generator voltage is not lowered by more than 10 per cent during 2 min of testing by a current 150 per cent of the rated one at the above power factor.

10.7.1.5 Testing a.c. generators with their voltage regulation systems, the following shall be checked:

.1 voltage variation up to the rated voltage at the rated power factor with the change of loading starting from the idling. In this case, the voltage shall not change by more than 2,5 per cent of the rated voltage for main generators and 3,5 per cent for emergency ones;

.2 voltage variation with the sudden change of the symmetrical load of a generator operating at the rated speed and voltage, and at the current and power factor available. In this case, the voltage drop shall not be below 85 per cent and its increase above 120 per cent of the rated voltage. After that change of loading, the generator voltage shall be restored within ±3 per cent of the rated one during not more than 1,5 s. For emergency generators, these values may be increased up to 5 s in time and up to ±4 per cent in voltage.

If precise data on the maximum sudden load are lacking, a load valued 60 per cent of the rated current with an inductive power factor of 0,4 and less, being put during idling and switched-off later, may be used. Such voltage regulation during transient conditions may be calculated values based on the previous type test records, and need not to be tested during factory testing of a generator;

.3 a capability of maintaining a current of at least three times the rated current of the generator within 2 s at a short-circuit or, where precise data is available, for a duration of any time delay which will be fitted in the tripping device for discrimination purposes. In order to provide sufficient information for determining the discrimination settings in the distribution system where the generator is going to be used, the generator manufacturer shall provide documentation showing the transient behavior of the short circuit current upon a sudden short-circuit occurring when excited, and running at nominal speed. The influence of the automatic voltage regulator shall be taken into account, and the setting parameters for the voltage regulator shall be noted together with the decrement curve. Such a decrement curve shall be available when the setting of the distribution system's short-circuit protection is calculated. The decrement curve need not be based on physical testing. The manufacturer's simulation model for the generator and the voltage regulator may be used where this has been validated through the previous type test on the same model.

10.7.1.6 The test of motors for a short-time torque overload shall be carried out in compliance with 10.5.2, Part XI "Electrical Equipment" of the Rules for the Classification and Construction of Sea-Going Ships.

The torque for d.c. motors may be in terms of overcurrent.

The tests of the electric propulsion motors of propulsion plants for a short-time torque overload given in specification for the electric propulsion plants may be replaced by the tests for a corresponding overcurrent. In addition to the above tests, the mechanical strength analysis for the components of the electric propulsion motor (output shaft, pole attachment points, etc.) at the design torque overload shall be submitted.

10.7.1.7 Checking the commutation of commutator machines, the following shall be taken into account:

.1 the check shall be carried out both in a rated mode and during short-time overcurrent;

.2 the check at a rated load shall be carried out following the time period required for a machine to reach a practically steady-state temperature;

.3 the check of commutation at a rated load is expediently to combine with the heat test, the overcurrent check, with the test for short-time overcurrent;

.4 a degree of machine sparking in the rated mode of operation shall not exceed 1,5 unless otherwise specified in the technical documentation for the machine in exceptional justified cases.

The sparking degree during overcurrent in all cases shall be specified in the technical documentation for the machine.

.5 the degree of sparking at electrical machine commutators is evaluated by the most sparkling brushes. Table for evaliating of the degree of sparking at electrical machine commutators is given in Appendix 7.

10.7.1.8 The stalling test shall be carried out under the following conditions:

.1 the rated mode of motor operation, a temperature of motor heating is the maximum during operation in that mode;

.2 the motor under test shall be mechanically locked, a stalling time shall be counted off since the rotor (armature) stop;

.3 the stalling duration for motors of the steering gear for directly-driven rudders is 60 s, the stalling duration and modes for motors of anchor and mooring machinery shall be consistent with the provisions in 5.6.2, Part XI "Electrical Equipment" of the Rules for the Classification and Construction of Sea-Going Ships;

.4 following the test, the machines shall be thoroughly examined for any damages, deformations, the noticeable change of an insulation colour.

10.7.1.9 The overspeed test shall follow the short-time overcurrent test, and as to the machines subjected to the stalling test, after the latter at a temperature of machine parts close to a steady-state temperature reached at the end of the heat test, with the following conditions to be met:

.1 the test duration for all machines excepting starters is 2 min (20 s for starters);

.2 series-wound motors shall be tested at a speed exceeding by 20 per cent the maximum specified in their rating plate, but exceeding by not less than 50 per cent the rated speed (at 120 per cent of an idle speed for starters in all cases);

.3 adjustable speed motors, as well as those having several rated speeds shall be tested at a speed exceeding by 20 per cent the maximum specified in their rating plate; all the others – at a speed exceeding the rated one by 20 per cent;

.4 machines may be tested in the mode of both a generator and motor; the mode corresponding to the machine purpose is preferred;

.5 the test duration is counted off since the moment when the machine has reached its test speed;

.6 following the test, the machine shall be thoroughly examined for any damages and deformations.

10.7.1.10 The test for immunity to shock short-circuit current shall be carried out in compliance with standard IEC 60034-1 (para 9.9) under the following conditions:

.1 the short-circuit mode shall be produced by a sudden simultaneous closing of all the three phases (poles) when a machine runs idle at a voltage of 105 per cent of the rated voltage with an automatic voltage regulation device switched on;

.2 the motor output in test shall be not less than the service one;

.3 the length of conductors from the machine to a closing device shall be the least, a cross-sectional area, the largest among specified in the technical documentation for a generator, the conductors material is copper;

.4 parameters of the short-circuit mode shall be recorded using an oscillograph;

.5 the assessment of test results (mechanical strength of the machine) is performed by means of the thorough examination of the machine, particularly of the condition and securing of frontal parts of the stator winding, welds and other mechanical joints, with due

regard for the results of an insulation strength test carried out after the test for immunity to short-circuit current.

The evaluation of the results of testing machines rated over 1000 kW is additionally carried out also for indications obtained from the strain measurement of stresses in the fastenings of an active steel and insulation of frontal parts, as well as from the measurements of vibrations (with vibration transducers) of the same parts, and also of the machine case and bearings.

10.7.1.11 Other tests and checks depending on a particular machine may binclude:

.1 check in operation of interlocks, protection and alarms (e.g. overspeed protection);

.2 check of the reserve of a.c. generators excitation (refer to 10.7.1.4);

.3 check of the voltage setting range for a.c. generators with a static field system;

.4 test of functioning of the electric heating of the machine;

.5 measurement of electric voltage between shaft ends, as well as between a bearing base insulated from a foundation and the latter (both measurements are conducted with use of a voltameter having small inner resistance when the machine runs at rated voltage and frequency in the same mode). In measuring the voltage between the bearing base and foundation, oil films between shaft necks and both bearings shall be shunted.

The above-listed tests (checks) may be performed in any sequence at any stage of testing.

10.7.1.12 D.c. voltage developed by megger when measuring the insulation resistance of electrical machines shall comply with the values specified in the Table 10.7.1.12.

Table 10.7.1.12

Rated Voltage Un (V)	Minimum Test Voltage (V)	Test Minimum Insulation Resistance (MΩ)
Un ≤ 250	2×Un	1
250 < Un ≤ 1000	500	1
1000 < Un ≤ 7200	1000	(Un / 100) + 1
7200 < Un ≤ 15000	5000	(Un / 100) + 1

10.7.2 Tests of transformers.

10.7.2.1 The scope of transformer tests and checks is given in Table 10.7.2.1.

10.7.2.2 To check the variation of secondary voltage on a percentage basis (ΔU, in per cent), the measurements of voltages at secondary winding terminals in idling U_o and at the active rated load U_r are compared. The check is combined with the heat test. The value to be checked is calculated from the formula

$$\Delta U = \frac{U_0 - U_r}{U_r} 100 \qquad (10.7.2.2)$$

A value of ΔU shall be less or equal to 5 per cent for transformers rated below 6,3 kVA, less or equal to 2,5 per cent for those rated 6,3 kVA and over.

10.7.2.3 In heat testing, the following shall be taken into account:

.1 the test shall be carried out by direct loading of transformers at rated voltages across terminals and rated currents in windings;

.2 in testing transformers with a non-combustible liquid dielectric, a temperature rise for upper layers of the latter over the temperature of a cooling medium is also determined.

10.7.2.4 The test for electrodynamical and thermal strength at short-circuit current is performed at an external short-circuit for compliance with the maximum values specified in the technical documentation for a transformer.

Table 10.7.2.1

Nos.	Transformers	Inspection and check	Measurement of insulation resistance	Insulation testing	Test of electrical strength of air gaps (refer to Footnote 2)	Test for compliance with operational conditions	Check of measurement of a secondary voltage value	Heat test	Overcurrent test	Test for electrodynamical and thermal strength at short-circuit current	Test of a tank for tightness and strength at a higher internal pressure	Test of a sample of non-combustible liquid dielectric
	Power ones:											
	three-phase rated at 6,3 kVA and over, and single-phase rated at 4,0 kVA and over	+	+	+	+	+	+	+	+	+	+	+
	three-phase rated under 6,3 kVA, and singlephase rated under ,0 kVA	+	+	+	–	+	+	+	+	+	–	–

N o t e s : 1. Symbols, refer to Table 10.7.1.1.
2. The test of electrical strength of air gaps is carried out for transformers for voltage 1 kV and over.

For three-phase rated 6,3 kVA and over, and single-phase rated over 4 kVA transformers, the test shall be performed under the following conditions:

.1 a test set shall provide the required value of a shock short-circuit current via the transformer with an accuracy of ±5 per cent of the rated one and the duration of short-circuit conditions therewith at least 0,5 s;

.2 the test set shall provide the flow of a steady-state short-circuit current via the transformer with an accuracy of ±10 per cent of the rated value and the duration of short-circuit conditions corresponding to the time of thermal short-circuit strength of the transformer (at least 3 s);

.3 the voltage (of frequency 50 Hz) shall ensure the above conditions;

.4 prior to the beginning of the test, the transformer shall be thoroughly examined with a view to compare its condition prior to, and after, the test. Moreover, prior to the beginning of these tests, opencircuit and short-circuit tests of the transformer shall be carried out. The data of insulation resistance measurements and insulation strength tests, also necessary for the following comparison, may be taken from the previous tests;

.5 the test may be performed both by using a special appararus for producing a short-circuit at terminals of the second winding of the transformer pre-connected in a circuit and by connecting in the circuit the transformer with the preliminary closed-coil secondary winding;

.6 the test shall be performed for each secondary winding, but if these have taps, then both with all the turns connected and with their minimal number.

The results of adjusting short-circuits are ignored as the test ones;

.7 the test shall be performed with the heated transformer at a temperature close to the maximum reached in the heat test;

.8 during the tests, the voltage and current at input, and the current in a short-circuited winding shall be recorded using an oscillograph.

It is recommended to measure forces in support structures;

.9 following the tests, the check open-circuit and short-circuit tests shall be carried out, insulation resistance shall be measured and the thorough examination of the transformer shall be performed. If all checks are satisfactory, insulation strength (at voltage equal to 0,8 time

the full test voltage) and interturn insulation shall be tested, whereupon the transformer shall be disassembled if necessary;

.10 the transformer is considered to have passed the test if no deformations, turns sliding, essential change of colour were revealed in examination, and comparison tests were satisfactory. Insignificant residual axial shiftings of windings and insignificant residual deformations of yoke beams, if these are within the standard limits, may be ignored in evaluating the test results.

The test for electrodynamical and thermal strength at short-circuit current of other transformers shall be carried out in accordance with standards or, if these latter are lacking, with the other approved technical documentation for transformers.

10.7.2.5 Transformer tanks for non-combustible liquid dielectric shall be tested for tightness and strength at an surplus pressure. The test technique, surplus pressure and criteria for evaluating the results shall be specified in the technical documentation for such transformers. Additionally, the records shall be submitted on testing the liquid dielectric taken from the tank of such a transformer, and on determining the conformity of breakdown voltage and the dielectric loss tangent with technical documentation.

10.7.3 Tests of static converters and uninterruptible power supplies (UPS).

10.7.3.1 The scope of tests and checks for static converters is given in Table 10.7.3.1.

Table 10.7.3.1

Static converters	Inspection and checks	Measurement of insulation resistance	Insulation testing	Tests for compliance with operational conditions	Heat test	Overload test	Test for electrodynamical and thermal strength at short-circuit current	Check of operation at load loss and increase	Test for immunity to switching overvoltage	Other checks	Test for permissible levels of radio interference voltage	Tests for immunity to electromagnetic emission
Rectifiers	+	+	+	+	+	+	+	+	+	(+)	+	+
Inverters	+	+	+	+	+	+	+	+	+	(+)	+	+
Frequency converters	+	+	+	+	+	+	+	+	+	(+)	+	+
UPS	+	+	+	+	+	+	+	+	+	(+)	+	+
Note. Symbols, refer to Table 10.7.1.1.												

10.7.3.2 In testing insulation, the strength of interturn insulation of the converter transformer (or the document to the effect that the transformer has passed such a test) shall also be checked.

10.7.3.3 In testing for overload, having completed a duty at the maximum temperature reached by the converter in overload, the functioning of overload protection, if provided, shall be checked. The current and the time of protection activation, as well as other pertinent parameters shall be checked for conformity with technical documentation.

10.7.3.4 The test for electrodynamical and thermal strength at short-circuit current shall be carried out under the following conditions:

.1 the short-circuit test shall be performed at the maximum short-circuit current withstood by the converter;

.2 the test at the maximum permissible short-circuit current shall be performed with the converter in practically cold state, under the normal environmental conditions and at the maximum continuously permissible value of voltage at the input of the converter which picks up the rated load, by producing the short-circuit close to output terminals, and for inverters – close to output and input terminals with amplitude and the duration of input short-circuit current entered in data sheets;

.3 the test may be performed at the minimum short-circuit current and the maximum permissible duration of its flow. This test shall be carried out with the converter in a hot state. The temperatures of the converter and the environment by the beginning of the test shall be the same as in the test for heat stability (heat test), i.e. this test shall be performed immediately after the completion of the test in a heat chamber;

.4 oscillographs shall be used in short-circuit processes.

10.7.3.5 The check of converter functioning at load loss and increase is effected at rated parameters at the converter input by means of sudden switching the load on and off according to the scheme: 0 – 50 per cent – 0, 0 – 100 per cent – 0, 0 – permissible load – 0. Oscillographs shall be used in the processes.

10.7.3.6 Tests for immunity to switching overvoltages are carried out by means of connecting the no-load converter to, and disconnecting it from, a supply source, and after that, of connecting the on-load converter carrying the maximum permissible load. An oscillogram shall evidence that the peak voltage at rectifiers therewith does not exceed their rated reverse voltage.

10.7.3.7 The other tests include checks of functioning of the control gear, alarms, ventilation, filter, battery capacity, as well as the other checks specified in the approved technical documentation depending on the type of the converter. The stages and sequence of their performance are not regulated.

10.7.4 Tests of accumulators and accumulator batteries.

10.7.4.1 Each type of an accumulator battery shall be tested.

Accumulators are tested if delivered individually (not as a battery).

10.7.4.2 The scope of accumulator and battery tests and checks includes:

.1 inspection and checks including the level and density of electrolyte;

.2 measurement of insulation resistance (in batteries);

.3 test of insulation strength (in batteries);

.4 test for the conformity with operational conditions;

.5 test for heat stability of acid accumulators mastic;

.6 check of tightness of acid accumulator monoblock units;

.7 check for self-discharge.

10.7.4.3 Prior to the tests, batteries (accumulators) shall be subjected to the necessary number of charging-discharging cycles in order that their capacity may reach the values guaranteed in technical documentation, and the results of their rated capacity check shall be submitted.

10.7.4.4 Tests by vibratory and shock loads shall be carried out as follows:

.1 fully charged batteries (accumulators) prepared according to 10.7.4.3 shall be exposed to vibratory and impact effects in three mutually perpendicular directions; in this case, any plugs preventing an outflow of electrolyte may be used;

.2 in tests for vibration resistance and shock resistance, the batteries shall be connected to a monitoring circuit. The current and voltage therewith shall be stable.

10.7.4.5 Having completed all the tests by vibratory and shock loads, the batteries shall be subjected to discharging to check the rated capacity which shall not be less than that specified in technical documentation (minus the energy consumed in the monitoring circuit).

10.7.4.6 In the test for heat stability, the battery shall be charged and discharged at a temperature of +55 °C. The charge and discharge modes may be normal or accelerated, being selected in each particular case. However, the obtained values of voltage, current and capacity shall be consistent with those specified in the technical documentation for the battery.

The test for cold endurance is carried out in a similar way.

Starter batteries shall be discharged in a starter mode.

10.7.4.7 The batteries are tested for resistance to motions and prolonged inclinations only for the purpose of checking the absence of electrolyte leakage.

The batteries with the maximum permissible level of electrolyte shall be exposed to motions according to 10.5.3.4 followed by alternate inclinations at 40° to the vertical for 10 min to both sides lying in two mutually perpendicular planes. In motions and inclinations, no electrolyte traces shall appear on the accumulators surface (plugs may be closed, but no sealing parts are allowed).

10.7.4.8 The test for heat stability of acid batteries mastic may be carried out with specimens not used in other types of tests. At first, the batteries are tested without electrolyte during 6 h at a temperature of +60 °C inclined at 45° to a normal position, and then, after cooling down to the normal test temperature, during 6 h at a temperature of –40 °C in a normal position. No mastic runs are allowed after heating, and no mastic breaks, cracks and breaks-away from monoblock unit covers after cooling.

10.7.4.9 The check of tightness of an acid battery monoblock unit shall be carried out after the battery exposure to all mechanical and temperature effects with due regard for the following conditions:

.1 if the batteries other than those which had passed the mechanical tests, were tested for mastic heat stability, the check of tightness shall be performed both with the batteries which have passed the mechanical and environmental tests and with the batteries tested for heat stability only;

.2 the battery tightness is checked by applying inside it an increased or lowered pressure differing from the atmospheric one by 133±9 N/m^2 during 4 to 5 s.

The battery is considered to have passed the check if the manometer or vacuum gauge reading does not change.

The positive result of the check confirms the mastic stability to mechanical and thermal effects;

.3 the tightness of battery without topping-up necks is checked by applying inside it an overpressure until safety valves activation.

10.7.4.10 The check for self-discharge consists in checking the residual capacity of the previously fully-charged battery, which has passed the tests for compliance with operational conditions, after 28 days out of operation at a temperature of 25±5 °C. The loss of capacity due to self-discharge shall not exceed 30 per cent of the rated capacity for acid accumulators and 25 per cent for alkaline ones.

10.7.5 Tests of switchgear.

10.7.5.1 The scope of switchgear tests and checks is given in Table 10.7.5.1.

10.7.5.2 In addition to the specified in 10.4.1, the following shall be checked in inspection and checks:

.1 arrangement of controls and indicators of the switching state of apparatus (on-off positions);

.2 arrangement of instruments and pilot lamps;

.3 colour of pilot lamps and control buttons;

.4 inscriptions and signs on plates and their arrangement, single-line diagrams of power circuits, mimic panels;

.5 composition, arrangement, installation, parameters and characteristics of apparatus, devices and accessories;

.6 arrangement, fastening and painting of busbars;

.7 wires laying and fastening;

.8 condition of surface treatment of current carrying and insulating parts and units;

.9 insulation distances;

Table 10.7.5.1

Switchboards and consoles	Inspection and checks	Measurements of insulation resistance	Test of insulation strength	Tests for compliance with conditions of equipment operation onboard a ship	Heat test	Test for electrodynamical and thermal strength at short-circuit current	Other tests and checks	Test for permissible levels of industrial radio interference voltages	Tests for immunity to electromagnetic emission
Switchboards and consoles of electrical propulsion installation control, monitoring and alarm	+	+	+	+	+	(+)	refer to 10.7.5.7	(+)	+
Ditto for main machinery	+	+	+	+	+	–		(+)	+
Ditto for electric installation	+	+	+	+	+	–			
Ditto for auxiliary and deck machinery	+	+	+	+	+	–		(+)	+
Ditto for navigation lights	+	+	+	+	+	refer to 10.7.5.6.5		+	+
Main and emergency switchboards	+	+	+	+	+	+		(+)	+
Other switchboards and devices (including fuse boxes)	+	+	+	+	+	+		(+)	+
Charging switchboards	+	+	+	+	+	–			+
Switchboards of external feed source	+	+	+	+	+	(+)		(+)	+
Enclosures of switchgear, switchboards and consoles of electrical installation, monitoring and alarm	+	–	–	+	–	–	–	–	–
Symbols : " + " = test (check) is needed; "(+)" = test (check) performance depends on the particular type of a product; " – " = test (check) is not needed.									

.10 availability and workmanship of the earthing of fixed and slide-out elements and the elements fitted on opening structures to the console board frame, as well as availability and workmanship of the units for earthing each section of the console board to the ship's hull;

.11 implementation of arrangements on protecting current carrying parts against ingress of liquid if hydraulic or liquid-cooled devices and apparatus are available;

.12 holding of opening and slide-out doors, boards, panels, etc. in open position.

10.7.5.3 In addition to the provisions of 10.6.1, the heat test shall be carried out with due regard for the following:

.1 cables shall be terminated at products with a bottom entry in the same way as onboard a ship in order to take into account the additional heating of cables;

.2 the number of cables shall to correspond to the number of product power circuits which may function simultaneously in operational conditions;

.3 cables cross-section area shall correspond to that specified in a connection diagram;

.4 cables heat release, that is potential in operation, may be simulated in any other equivalent way;

.5 in testing, the temperature of heating current-carrying and insulating parts, the air inside an enclosure, the product enclosure and an ambient air shall be measured.

10.7.5.4 The test of switchgear for electrodynamical and thermal strength at a short-circuit current shall be carried out with due regard for the following conditions:

.1 three-phase current switchboards may be tested by a single-phase short-circuit current provided it is alternately conducted in each two adjacent phases of a power circuit. In such cases, the maximum value of a shock short-circuit current is reduced by 7 per cent as compared with the amplitude value of the limiting short-circuit current specified in the switchboard technical documentation;

.2 switchgear power circuits are subject to testing. The scheme of tests shall be approved by the Register as part of the test program and procedure;

.3 prior to the beginning of tests for electrodynamical strength, distances between currentcarrying parts in a number of cross-sections mostly potential for deformations shall be measured. These distances shall be checked each time after switching on a shock current;

.4 if the electrodynamical strength of apparatus is below the rated strength of switchboard busbars, such apparatus may be shunted or replaced by jumpers of which the locations shall be specified in the test scheme;

.5 tests of apparatus shall be carried out according to the requirements of 10.7.6.3 to 10.7.6.5.

10.7.5.5 The DC (direct current) distribution board tests of functioning short circuit protection and strength shall be performed, provided the following conditions are complied with:

.1 direct current switchboards mounted on a tailored test bench and fitted to the electrical power source, are connected with the power consumers, the composition of which is defined in accordance with the agreed program and test procedure. The consumers are selected by the highest predicted current contribution to the short-circuit point;

.2 direct current switchboards shall be tested by connecting through automatic circuit breaker of interpolar non-inductive jumper. The jumper direct-current resistance and switching circuit breaker are calculated and selected on the basis of the predicted severe conditions of short circuit occurrence;

.3 the maximum value of shock short-circuit current shall be reduced by 7 per cent as compared to the amplitude value of the limiting short-circuit current specified in the switchboard technical documentation.

10.7.5.6 A switchboard is considered to have passed the thermal short-circuit test if:

.1 no deformation or break-down of current-carrying parts and their fastenings has occurred;

.2 no actuation of disconnector blades, contacts disconnection or freezing have occurred;

.3 a temperature of current-carrying parts has not exceeded the permissible one;

.4 no other damages interfering with the normal switchboard functioning are detected;

.5 no deterioration of the switchboard insulation has been deteced in testing the insulation strength following the thermal short-circuit test;

.6 the switchboard and installed equipment protection gear has been activated in accordance with the algorithm preset in the test program;

.7 no failures and malfunctions have occurred in the operation of circuit-breakers, protected equipment and other distribution switchboard operating systems.

10.7.5.7 Among other tests and checks depending on a particular switchgear may be:

.1 run-up of apparatus and drives thereof. It applies to the apparatus and drives jointed in assembly of a switchboard, to the apparatus consisting of separate parts (e.g. bladed-type apparatus), to generator and section switches, as well as to the other apparatus (e.g. contactors and relays) if these are not subject to the operational test;

.2 check of interlocks functioning. The reliability of interlocks operation shall be repeatedly checked during testing for vibration and shock resistance, heat stability and cold endurance, and after the completion of these tests. Electrical interlocks shall be checked at the maximum permissible deviations of voltage and frequency from the rated values;

.3 test of the switchboard structure for mechanical strength at repeated switching operations. Such a test applies to apparatus of which switching on and off need significant forces. The test is carried out by means of repeated switching operations (at least 100 cycles) using each apparatus. After testing, the switchboard structure shall be thoroughly examined in the area of apparatus and their drives fastening;

.4 operational test. Such a test applies to control, monitioring and alarm circuits of all switchboards and consoles, where available, in testing for resistance to mechanical and environmental effects what is of the particular importance for circuits with relay-contact elements.

In addition, the operational test of navigation lights switchboard shall be carried out at the maximum permissible continuous and short-time deviations of voltage and frequency from the rated values (in testing for vibration and shock resistance, heat stability and cold endurance);

.5 the short-circuit test of navigation light switchboards provides for the check of protection actuation at a short-circuit in the line to a navigation light, and the check of the switchboard in the process. The test shall be performed alternately for two lines with two short-circuits in each line.

The results of short-circuit tests are considered satisfactory if:

protection has switched off an emergency line;

an alarm on the switching-off of the emergency line has been activated;

the other lantern lines have continued operation what is evidenced by functioning of the alarm of the circuit under test;

switchboard elements have remained operational with no replacements excepting fuse links of fuses; the test of insulation strength has confirmed a satisfactory condition of insulation;

the examination result is positive;

.6 the check of the voltage drop at navigation light switchboard alarm elements connected into the circuits of these navigation lights confirms its tolerable level.

10.7.6 Tests of electrical (switch, protection, control) apparatus.

10.7.6.1 The scope of tests and checks of electrical apparatus is given in Table 10.7.6.1.

10.7.6.2 In addition to the specified in 10.4.1, the inspection and checks shall be conducted when the following conditions are met:

.1 for apparatus intended for integration in electrical switchboards and other products, the fastenings, convenience of mounting and disassembly in operational conditions are checked;

.2 in products incorporating other apparatus (in controllers, rheostats, etc.), the adjustment of these apparatus for set parameters is checked;

.3 correct earthing and a contact pressure, a contact gap and follow-up are checked.

10.7.6.3 The check of operate and reset values for apparatus shall be carried out when the following conditions are met:

.1 it is essential to make sure that the apparatus operation and reset at the limiting permissible deviations from the rated values of voltage, current and frequency occur (do not occur if are not supposed to);

.2 in checks of electromagnetic apparatus, a power source (a supply circuit) shall provide an opportunity to receive steady parameters of electric power.

The travel of the electromagnet armature shall not essentially impact the set voltage and current;

Table 10.7.6.1

Apparatus	Inspection and checks	Measurements of insulation resistance	Test of insulation strength	Tests for compliance with conditions of equipment operation onboard a ship	Heat test	Check of operate (and reset) value	Test for limiting switching capacity	Test for electrodynamical and thermal strength at short-circuit current	Check of functioning of manual and motor drives and of position indicator	Operatomal test of a circuit	Tests for permissible levels of industrial radio interference voltages	Tests for immunity to electromagnetic emission	Other tests (and checks)
Circuit breakers	+	+	+	+	+	+[1]	+	+[2]	+	+	–	+	–
Breakers, switches, disconnectors	+	+	+	+	+	–	+	+[2]	+	–	–	–	–
Fuses	+	+	+	+	+	+[1]	+[3]	–	–	–	–	–	+[4]
Contactors, relays[5]	+	+	+	+	+	+	+	+[6]	–	–	–	+	+[7]
Starters and controllers (including master controllers), starter and startingregulating rheostats	+	+	+	+	+	+[8]	+	+[6]	+	+	+[9]	+	+[7]
Field rheostats, resistors in boxes	+	+	+	+	+	–	–	–	+[10]	–	–	–	–
Electromagnetic couplings[11]	+	+	+	+	+	–	–	–	–	–	–	+	+[12]
Push-button and limit switches	+	+	+	+	+	–	+	–	–	–	–	–	–
Magnetic amplifiers, reactors, chokes	+	+	+	+	+	–	–	(+)	–	+[13]	–	+	(+)
Apparatus, blocks, modules with contactless elements	+	+	+	+	+	–	–	–	–	–	(+)	+	(+)
Generator protection devices	+	+	+	+	+	+	+	(+)	–	+	(+)	+	(+)

Symbols:
" + " = test (check) is needed;
"(+)" = test (check) performance depends on the particular product (i.e. on its desgn, principle of operation, purpose, location onboard a ship, etc.);
" – " = test (check) is not needed.

---

1 For circuit breakers the operation of releases (maximum, minimum, reverse current, independent and at a short circuit current in one pole). Time-current characteristics are checked.

2 The electrodynamic and thermal strength during short-circuit currents are tested.
For circuit breakers the test of switching capacity is combined with the tests of the maximum switching/breaking capacity.
Universal breakers and other switches, switches operated in control, signalling and measuring circuits, as well as forming part of the electrically-started internal combustion engines are not subject to testing.

3 For fuses, tests for switching off capability (including interlocking contacts of the auxiliary circuits).

4 Test for the maximum non-fusing current and the minimum fusing current applies to fuses with fuse links of general use, check of activating indicators and block effecting upon the contacts of fuse auxiliary circuit or interlocking device of other apparatus.

5 Except for semiconductor relays, not intended for starting electric motors.

6 Test for electrodynamic and thermal strength during short-circuit current for main contacts and relay coil current, that is, switched in succession.
Electrothermal relays are tested for thermal strength only.

7 Check of operation/activation of manual drive interlocking of reversible contactors, starters, controllers.

8 Relates to integrated apparatus (contactors, relays).

Apparatus	Inspection and checks	Measurements of insulation resistance	Test of insulation strength	Tests for compliance with conditions of equipment operation onboard a ship	Heat test	Check of operate (and reset) value	Test for limiting switching capacity	Test for electrodynamical and thermal strength at short-circuit current	Check of functioning of manual and motor drives and of position indicator	Operatomal test of a circuit	Tests for permissible levels of industrial radio interference voltages	Tests for immunity to electromagnetic emission	Other tests (and checks)
[9] Relates to controllers and control gear rheostats, as well as to starters and starting rheostats where they do not meet the requirements specified in 2.2 of Part XI "Electrical Equipment" of the Rules for the Classification and Construction of Sea-Going Ships. [10] Relates to rheostats. [11] Tests of electromagnetic couplings are conducted similarly to the tests of electrical machines (and in the same succession). [12] Check of balancing, relation between the maximum and the nominal moments, check of non-available axial forces, overspeed test. [13] Relates to magnetic amplifiers.													

.3 checks shall be carried out in the hot and cold state of the apparatus when its parts have reached the thermal equilibrium during tests for heat stability and cold endurance. In the apparatus with voltage coils in a hot state, sufficiency of the force developed by an electromagnet to activate the apparatus at the minimum permissible values of voltage and frequency is also checked; in the apparatus with voltage coils in a cold state, the check concerns the mechanical strength of the apparatus activated at the maximum permissible voltage across the electromagnet coil;

.4 at least three measurements of parameters shall be made in activation; for d.c. coils, at least six mesurements (by threes of each polarity);

.5 the measurements shall be evaluated in terms of the worst result;

.6 for apparatus with d.c. voltage coils, an operate voltage U_{op} may be determined indirectly, i.e. by measuring an operate current I_{op} with the following recalculation of the result by the formula

$$U_{op} = I_{op} R_t, \qquad (10.7.6.3.6)$$

where R_t = active resistance of a coil at a test temperature, in Ohm;

.7 protective characteristics, if a time delay depends on the apparatus temperature, are determined in heating with constant current beginning with the cold state of the apparatus.

10.7.6.4 The purpose of the test for limiting switching capacity is to make sure that this capacity corresponds to the one specified in technical documentation. The test shall be carried out when the following conditions are met:

.1 depending on the apparatus type and the requirements of the technical documentation for the apparatus, all or some of the following parameters are checked:

maximum breaking capacity;

maximum making capacity;

the apparatus capability to withstand one or more cycles consisting of the following one after the other operations of the switching-on and automatic switching-off of the maximum current which defines the maximum switching capacity of the apparatus;

the apparatus capability to switch off the currents which are lesser than those defining the maximum breaking capacity of the apparatus; it is also checked the apparatus capability to switch off its critical currents if the zone of such currents is not specified in the technical documentation for the apparatus;

.2 potentials of the test installation shall be consistent with the requirements of the Register approved technical documentation;

.3 the apparatus under test shall be installed and tested in a normal working position;

.4 all the apparatus parts to be earthed in operation, as well as all its current-carrying parts having no electrical links with the circuit under test, in order to ascertain that no arc overthrow to them occurs in testing for breaking capacity (including the switching-off of critical currents), shall be electrically- interconnected and terminated at the neutral of a power source or an artificial neutral point;

.5 if the ionized zone created by an arc is not limited by the apparatus enclosure, the boundaries of the ionized zone of the apparatus discharge shall be checked for compliance with the boundaries specified in technical documentation. For this purpose, steel gratings or perforated plates (recommended: plate thickness – 3 mm, hole diameter – 7 mm, distance between hole centres – 10 mm) electrically- interconnected and terminated as specified in 10.7.6.4.4 shall be arranged on the zone boundaries;

.6 the boundaries of a flameout in switching the maximum current off shall be checked (for this purpose, it is recommended to arrange flammable material on the flameout zone boundaries specified in the technical documentation for the apparatus);

.7 tests shall be carried out at the limiting value of the time constant (power factor) of the circuit, as well as at the values for which the most severe conditions of commutation are expected (to be specified in the test program and procedure). In each three-phase circuit, a power factor shall not depart from an arithmetic mean of the power factor of three phases by more than +15 per cent;

.8 to avoid the improvement of test conditions for apparatus for which an opening time essentially depends on the setting value of releases, such apparatus shall be tested being adjusted for the maximum and minimum values of the opening time;

.9 to avoid the improvement of test conditions for single-pole apparatus designed for operation in three-phase circuits (e.g. fuses), such apparatus shall be tested being simultaneously connected in all the phases in accordance with the conditions of their application (because during testing in a single-phase circuit, the opening may occur at a favourable current phase);

.10 during tests, oscillography shall be used for currents at apparatus poles and the voltage across input terminals;

.11 the test for maximum breaking capacity shall be carried out with fuses with fuse links for rated current;

.12 the test of switching capacity of controllers, starter and starting-regulating rheostats shall be carried out with controllers (rheostats) connected in the circuit of an electric drive.

The output of the motor used in the test and test conditions (starts, reverses, overloads, current commutation for a braked motor, etc.) shall be stipulated by the manufacturer's technical documentation.

The apparatus is considered to have passed the test for switching capacity if during the test:

no damage interfering with the normal operation of the apparatus has occurred (a need of insignificant repair is allowed, e.g. contacts cleaning or replacement);

no enclosure failure, insulation degradation or other defects interfering with the further operation of the apparatus, but potentially hazardous for the service personnel have occurred;

no arc overthrow between poles, to the metallic enclosure and the other earthed and current-carrying parts has been observed;

the arcing time did not exceed the values specified in the technical documentation for the apparatus;

no contacts weld has occurred.

10.7.6.5 Test for electrodynamical and/or thermal strength.

The test purpose is to check the apparatus capability to withstand a mechanical and/or thermal action of limiting short-circuit currents specified in the technical documentation for the apparatus.

The test shall be conducted when the following conditions are met:

.1 the test circuit voltage shall be sufficient to prevent the current break in the circuit when contacts are opened by electrodynamic forces;

.2 if the apparatus design provides for an opportunity to adjust a contact pressure, the test shall be performed at the rated working values of pressure specified in the technical documentation for the apparatus;

.3 the test may be started with the apparatus in a cold state. A shock current shall be switched on at least three times (switchings-on in adjustment are ignored). Intervals between shock current supplies shall be such that the currentcarrying parts of the apparatus could cool down to a temperature corresponding to their continuous operation at the full load.

The test for thermal strength is recommended to combine with the last switching-on of shock current. Otherwise, it shall be started by the switching-on of shock current at the above working temperature of the apparatus;

.4 means for measuring a temperature in the test for ther-mal strength shall provide readings within not more than 2 s;

.5 switching-on and -off of the test circuit shall be carried out by the apparatus of a test installation. The parameters of the short-circuit process shall be monitored by means of an oscillograph.

The apparatus is considered to have passed the test in the absence of the following:

contacts weld;

spontaneous switching-off;

extreme heating of parts (in excess of the specified in the technical documentation for the apparatus);

arc overthrow between poles, to adjacent electrically-independent current-carrying parts, an enclosure and other earthed metallic parts;

occurrence of external effects hazardous for the service personnel;

damages preventing its further normal operation.

10.7.6.6 The check of the driving gear of a circuit breaker shall be carried out according to 10.7.6.3.

The following shall also be checked:

.1 reliability of breaker opening by means of any of releases with an excited closing device;

.2 impossibility to close the breaker if a closing operation begins while an opening device is still active;

.3 absence of hazard for the personnel and of breaker damages in wrong actions (actuation of the closing device with the closed breaker and of the opening device with the opened breaker);

.4 transition to a manual drive and vice versa;

.5 safety of the personnel and the lack of a possibility to damage the apparatus using the manual drive and simultaneously remotely closing (opening) driving gear circuits;

.6 functioning of interlocking against repeated closings of the breaker for short-circuit (recommended to be combined with the test for the limiting switching capacity of the apparatus).

10.7.6.7 The test for the maximum nonfusing current and the minimum fusing current applies to fuses with fuse links taking into account the following:

.1 the test for the maximum nonfusing current shall be performed with fuses with fuse links having the maximum electrical resistance, and for the minimum fusing current, with fuse links having the minimum resistance;

.2 the temperature in testing shall be consistent with the one specified in technical documentation.

If within the time specified in technical documentation, the fuse does not interrupt a circuit in the test for the maximum nonfusihg current, and within the time not exceeding the one specified in technical documentation, interrupts the circuit in the test for the minimum fusing current, the fuse has passed the test.

10.7.6.8 Time-current and ampere-second characteristics of fuses shall be checked against the oscillograms obtained in testing for breaking capacity.

10.7.7 Tests of capacitors and capacitor sets for raising a power factor.

10.7.7.1 The scope of tests and checks for capacitors and capacitor sets includes:

.1 inspection and checks;
.2 measurement of insulation resistance;
.3 test of insulation strength;
.4 test for compliance with operational conditions of equipment onboard a ship;
.5 check for tightness;
.6 measurement of a loss-angle tangent;
.7 test for thermal stability;
.8 test for discharge;
.9 check of duration of capacitors operation;
.10 check of protection functioning;
.11 check of functioning of the set automation (if any).

10.7.7.2 Testing capacitor sets for compliance with operational conditions onboard a ship, instead of the test for heat stability, the test for so-called thermal stability is carried out at a temperature in a thermal chamber by 5 °C exceeding the one specified in Table 10.5.4.1.3 and at the voltage across the terminals at least 120 per cent of the rated one with a frequency of 50 Hz. After a warm-up to the thermal equilibrium, capacitors are held during 48 h. The results of tests are considered satisfactory if the loss-angle tangent and the change of an enclosure temperature during the last 10 h are within the limits set in technical documentation.

If essential changes are observed, the test is continued untill stabilization or breakdown.

10.7.7.3 The test of a protective enclosure is carried out on complete capacitor sets only (e.g. to be tested is the cabinet enclosure wherein capacitors are located).

10.7.7.4 The check for tightness is performed with a purpose to make sure that an impregnating dielectric does not leak. Capacitors are held in a thermal chamber at a temperature of 105 to 110 °C untill the full heating round the whole volume during 8 to 16 h (depending on overall dimensions), and then are cooled down at a temperature of 5 to 35 °C during the same time, are heated again and cooled down in the same way.

10.7.7.5 The test for discharge is carried out by means of five short-circuited dicharges after charging by the d.c. double rated voltage. Not later than in 5 min after that, the strength of insulation between armatures shall be tested.

Capacitors are considered to have passed the test if the change of their capacity measured prior to the test for discharge and after the test of insulation strength does not exceed 2 per cent.

10.7.7.6 The check of capacitors protection functioning shall demonstrate that with the capacitor element breakdown its fuse operates and the capacitor does not fail, and to confirm the right choice of protection and the immunity of the capacitor set to short-circuit current effects.

On completion of the check, the set shall be thoroughly examined and insulation parameters shall be checked.

10.7.8 Tests of busbars.

10.7.8.1 The scope of busduct tests and checks shall include:

.1 inspection and checks;

.2 measurement of insulation resistance;

.3 test of insulation strength;

.4 test for compliance with operational conditions onboard a ship;

.5 heat test;

.6 overload test if overload specified in technical documentation;

.7 test for electrodynamical and thermal strength at short-circuit current (may be replaced by calculation for large values of output).

10.7.8.2 Mechanical tests apply to all the busbar elements being different from the others in design (straight, angular, tee and other sections, junction boxes) assembled in various combinations in several spans.

If supports are signicantly spaced, it is allowed to test several single busbar spans installed and secured to a stand on two supports each.

10.7.8.3 The heat test shall be performed at least with three interconnected and end-closed various elements of the busbar which are most representative for such a test. The same busbar elements shall be used in the overload test.

10.7.8.4 The test for electrodynamical and thermal strength at short-circuit current shall be performed with busbar sections and junction box types which are most representative for a given design. Otherwise, the provisions of 10.7.5.4 to 10.7.5.5 shall be followed in the test.

10.7.9 Tests of electrical measuring instruments.

10.7.9.1 Tests of electrical measuring instruments (voltmeters, ammeters, wattmeters, frequency meters, meggers, synchronoscopes, phase indicators, phase meters) and their parts outside the very instrument shall be carried out in the following scope:

.1 inspection and checks;

.2 measurement of insulation resistance;

.3 test of insulation strength;

.4 test for compliance with operational conditions onboard a ship;

.5 heat test;

.6 overload test;

.7 check of a basic error (including variations);

.8 check of a complementary error;

.9 check of the voltage and intensity level for an electromagnetic field of radio interference;

.10 tests for immunity to electromagnetic emmision.

10.7.9.2 The test for compliance with operational conditions onboard a ship is carried out with due regard to the following:

.1 in tests for vibration resistance and shock strength, the electrical load of an instrument shall be equal to about 65 to 70 per cent of the rated one, and half the amplitude of indicator oscillations and the change of readings shall not exceed the tolerable basic error of the instrument;

.2 in tests for resistance to motions and prolonged inclinations, the change of instrument readings in the working section of a scale shall not exceed the value of the basic error;

.3 in tests for heat stability and cold endurance, the changes of instrument readings due to the variation of the temperature of an ambient air in a test chamber within the range of the maximum and minimum working temperature shall be checked. The values obtained shall not exceed those permitted by technical documentation.

10.7.9.3 Heat and overload (long-term and impulse) tests, checks of a basic error, variation and complementary error (i.e. check of the effect of external factors defining the complementary error, like the change of an instrument inclination, of a temperature, voltage, frequency, voltage or current curve form, an external magnetic and electric field, the effect of an adjacent instrument and a ferromagnetic shield whereon the instrument is placed) are carried out according to the technical documentation agreed in accordance with an established procedure.

10.7.10 Tests of electric drives and electrical equipment of machinery and arrangements (as a set).

10.7.10.1 The accessories provided by the RS Nomenclature and being part of the electric drive or electrical equipment of a mechanism (an arrangement), prior to the beginning of tests as part of such circuits, shall pass post-manufacturing tests in the appropriate scope specified in this Section.

10.7.10.2 The scope of tests and checks of electrical equipment circuited as electric drives is given in Table 10.7.10.2.

10.7.10.3 The scope of tests according to Table 10.7.10.2 is compulsory for both the manufacturers (suppliers) of electric drives and the manufacturers (suppliers) of machinery if these provide machinery with electric drives.

10.7.10.4 If single types of tests of electric drive specimens cannot be carried out on a stand, the Register can allow the performance of such tests (checks) onboard a ship during mooring and sea trials (e.g. tests of electric drives of the propulsion plant) what shall be specially agreed by the developer (manufacturer) of the electric drive in the technical documentation for its supply for taking into account in the programs and procedures of ship's mooring and sea trials.

Table 10.7.10.2

Nos.	Electric drives	Inspection and checks	Measurements of insulation resistance	Check of manual interlock functioning	Check of functioning of discharging magnetic field energy	Check of electromagnetic brake functioning	Check of undervoltage protection functioning	Check of automatic start after voltage recovery	Check of limit switches functioning	Other checks of diagram functioning	Check of no-load drive operation	Test of on-load drive operation	Stalling test	Check of overload protection functioning	Tests for permissible level of voltage and intensity of radio interference field	Tests for immunity to electromagnetic emission
1	Propulsion plants[1]	+	+	–	(+)	(+)	–	–	–	(+)	+	+	–	+	–	–
2	For auxiliary machinery (pumps, compressors, fans, air blowers, separators, etc.)	+	+	–	(+)	–	+	–	–	(+)	+	+	–	+	+	+
3	For deck machinery:															
	.1 steering gear	+	+	(+)	(+)	–	–	+	+	(+)	+	+	(+)	+	+	+
	.2 anchor machinery	+	+	(+)	(+)	+	+	–	–	(+)	+	+	+	+	+	+
	.3 mooring machinery	+	+	(+)	(+)	+	+	–	–	(+)	+	+	+	+	+	+
	.4 towing machinery	+	+	(+)	(+)	+	+	–	–	(+)	+	+	–	+	+	+

Nos.	Electric drives	Inspection and checks	Measurements of insulation resistance	Check of manual interlock functioning	Check of functioning of discharging magnetic field energy	Check of electromagnetic brake functioning	Check of undervoltage protection functioning	Check of automatic start after voltage recovery	Check of limit switches functioning	Other checks of diagram functioning	Check of no-load drive operation	Test of on-load drive operation	Stalling test	Check of overload protection functioning	Tests for permissible level of voltage and intensity of radio interference field	Tests for immunity to electromagnetic emission
	.5 ship's crane, derrick and hoist machinery	+	+	(+)	(+)	+	+	–	+	(+)	+	+	–	+	+	+
	.6 boat winches	+	+	+	(+)	+	+	–	+	(+)	+	+	–	+	+	+
4	For lifts	+	+	+	(+)	+	+	–	+	(+)	+	+	–	+	+	+
5	For watertight doors	+	+	+	(+)	–	–	+	+	(+)	+	+	–	+	+	+
6	For pipe fittings	+	+	+	(+)	–	(+)	(+)	+	(+)	+	+	–	+	+	+
7	For refrigerating plants	+	+	–	–	–	+	–	–	(+)	+	+	–	+	+	+
8	Impressed-current cathodic protection system	+	+	–	–	–	–	–	–	+	–	–	–	–	(+)	–

Symbols, refer to Table 10.7.5.1.
[1] Bench tests of composite (hybrid) propulsive systems shall be carried out in compliance with Appendix 17.

10.7.10.5 Additionally to electric drives, the sets of electrical equipment for lifts also include alarm and lighting circuits (with elements), for watertight doors include alarm circuits, for refrigerating plants in addition to electric drives may include measurement circuits and alarm circuits.

Because of this, the functioning of all the other circuits and elements in all potential and rule-required versions of their operation shall be checked during integrated tests of such electrical equipment.

10.7.10.6 The inspection and checks of electric drives are carried out in the main in order to ascertain the conformity of electrical equipment and its connection diagrams with technical documentation.

10.7.10.7 The insulation resistance of circuits shall be measured in a practically cold and hot (following the on-load test) states.

10.7.10.8 The check of functioning of a discharging magnetic field energy is carried out in the circuits of d.c. electric drives (with shunt- and compound-wound motors) both with the switched discharging resistor circuit of a parallel winding and with the permanently closed one. In the first case, the timeliness of circuit closing and the discharging effect are checked – voltage therewith is across the winding, in the second case, the discharging effect only.

10.7.10.9 If limit switches are impractical, due to design reasons, to arrange under stand conditions similarly to the operational version, they shall be at least connected to appropriate circuits to check the diagram functioning.

10.7.10.10 The check of a drive for no-load functioning involves repeated starts, stops, reverses and operation of the drive for every speed during the time sufficient for being convinced of the normal operation of the drive and for measuring the necessary parameters.

10.7.10.11 The test for on-load functioning of a drive being part of the machinery shall be carried out according to the Register approved program and procedure for tests of the mechanism in all the modes of its on-load and overload operation.

10.7.10.12 The stalling test shall be carried out to check the timeliness of drive protection activation.

Besides electric drives of anchor and mooring machinery, this test applies only to those electric drives of the rudder and steering gear, which are rigidly joined to the rudder stock (e.g. with a gear drive, screw gear, steering line transmission).

10.7.10.13 The functioning of overload protection shall be checked at long-term and short-time overloads of a driving gear.

The check of electric drives may be carried out with use of special electrical loading devices at the firm (manufacturer).

10.7.11 Tests of electrical equipment of electrically-started internal combustion engines.

10.7.11.1 The accessories specified in the RS Nomenclature and being part of the electrical equipment of electrically-started internal combustion engines, prior to the beginning of tests as part of the electrical equipment circuits of such engines, shall pass post-manufacturing tests in the appropriate scope specified in this Section.

10.7.11.2 The tests of the electrical equipment set for internal combustion engines shall be carried out when the equipment is mounted in its standard positions on the engine which it is intended for.

During test of electrical equipment at the firm (manufacturer), simulators (if an internal combustion engine is unavailable) may be used separately for a charging generator drive, loading of a starter and starting relay, etc.

Bench tests with use of simulators shall be fully equivalent to tests on an internal combustion engine.

10.7.11.3 Tests and checks shall be carried out in the following scope:

.1 inspection and checks (for conformity of products and their connection diagrams with technical documentation);

.2 measurement of insulation resistance in a practically cold state;

.3 test of starting circuit functioning;

.4 test for functioning of the accumulator battery charging circuit;

.5 check in operation of other circuits and elements (if any);

.6 measurement of insulation resistance in a hot state of products;

.7 check of the electrical equipment condition after tests (with disassembly if needed).

10.7.11.4 The test of starting circuit functioning should be carried out by means of at least three series of starter switchings-on beginning with the practically cold state of the starter and the internal combustion engine. Each series comprises ten switchings-on having a duration of 5 to 6 s at the maximum load of the starter. Intervals between working periods shall be within 6 to 10 s, between series, the minimum necessary for starter cooling.

10.7.11.5 The test of the charging circuit of an accumulator battery shall be carried out in all possible modes of internal combustion engine operation untill the full charge of the discharged battery. The engine speed at which the battery is switched on for charging, the speed (at speed drop) at which the battery is switched off of the charging circuit, the presence and the value of reverse current shall be recorded.

Generator regulators (voltage regulators) with contact and contactless elements shall be checked with standard generators and a corresponding accumulator battery.

10.7.11.6 The test for the permissible level of industrial radio interference voltages shall be performed alternately for each circuit (battery charging, starting, etc.). All the equipment shall be interconnected with cables (wires) of the brands and cross-sections specified in circuits and the continuity of shielding for circuits with shielded cables shall be ensured.

10.7.12 Tests of Lighting fixtures, search lights and control gear of gas-discharge lamps.

10.7.12.1 The scope of tests and checks of lighting fixtures and control gear of gas-discharge lamps is given in Table 10.7.12.1.

Table 10.7.12.1

Lighting fixtures and search lights	Inspection and checks	Measurement of insulation resistance	Test of insulation strength	Tests for compliance with operational conditions onboard a ship	Heat test	Test for constancy of material characteristics	Thermal stability test	Check of capacitors discharge time	Check of lighting fixture operation time	Test for permissible level of industrial radio interference voltage	Tests for immunity to electromagnetic emission
With incandescent lamps	+	+	+	+	+	+	+	–	–	–	–
With gas-discharge lamps	+	+	+	+	+	+	+	+	–	+	+
With accumulator and charging devices	+	+	+	+	+	+	+	–	+	–	+
Battery safe-type portable ligthing fixtures[1]	+	–	–	+	–	–	+	–	+	–	+
With LED lamps	+	+	+	+	+	+	+	+	–	–	+

[1] Prior to the beginning of testing safe-type lighting fixtures (lanterns), the documents of a competent body confirming the safe type of a product shall be checked.

10.7.12.2 Control gear for lighting fixtures with gas-discharge lamps, if intended for installing separately from the lighting fixture, shall be tested in combination with the lighting fixtures excepting the cases specified in 10.7.12.3 and 10.7.12.4.

10.7.12.3 The heat stability test applies only to the control gear that is intended for installing separately from a lighting fixture.

10.7.12.4 The heat test shall be performed with due regard for the following:

.1 the test voltage shall be equal to 1,1 times the rated one, the lamp power is the largest the lighting fixture is designed for;

.2 in testing, deckhead and bulkhead lighting fixtures shall be secured on a wooden board of at least 15 mm thick coated with a black dull paint.

The lighting fixtures to be integrated in deckheads are installed on a mock-up.

10.7.12.5 The test for constancy of material characteristics shall be performed in a heat chamber when the following conditions are met:

.1 temperature in the chamber is +55 °C;

.2 lighting fixtures with incandescent lamps shall be tested at the power by 15 per cent exceeding the rated power of the largest lamp the lighting fixture is designed for;

.3 lighting fixtures with gas-discharge and LED lamps shall be tested at the voltage by 10 % exceeding the rated one;

.4 control gear intended for installing separately from a lighting fixture are not tested for the constancy of material characteristics;

.5 the test shall continue for at least 300 h;

.6 lighting fixtures are considered to have passed the test for the constancy of material characteristics if the following has not been revealed:

wire insulation drying-up and cracking;

loss of spring properties of lampholder central contacts;

flaking, cracking, fusing, burning or the change of the geometric shape of parts;

not permissible reduction of insulation resistance.

10.7.12.6 The thermal stability test shall be performed with due regard for the following:

.1 the test shall be applied to lighting fixtures having a degree of protection 1 and over (control gear intended for installing separately from the lighting fixture are not subject to testing);

.2 lighting fixtures with lamps of the largest power they are designed for, shall be kept switched on untill the thermal equilibrium is reached, whereupon the hot lighting fixtures are immediately to be exposed (being switched on) to water effects according to Table 2 of Appendix 9 (depending on the protective enclosure of lighting fixtures);

.3 a temperature of water in the test of lighting fixtures having enclosures IPX1 to IPX4 shall not exceed 20 °C, enclosures IPX5 to IPX6, 15 °C;

.4 duration of water exposure shall be 15 min for lighting fixtures having enclosures IPX1, 10 min for IPX2 and 5 min for IPX3 to IPX6;

.5 the entire cycle of testing for IPX5 and IPX6 lighting fixtures shall be performed three times, i.e. after warming-up and drying-up, the hot lighting fixtures shall again be exposed to a water jet;

.6 the test for thermal stability is recommended to be combined with protective enclosure testing.

10.7.12.7 The time of capacitors discharge (after a switch-off) down to a value not exceeding 50 V shall not be more than 1 min.

10.7.13 Tests of ship's apparatus and devices for intercommunication, alarm, monitioring and control.

10.7.13.1 The scope of tests and checks is given in Table 10.7.13.1.

10.7.13.2 The heat test shall be carried out at the largest continuously-permissible voltage at the inputs of products power supply. The lamps of scale lighting shall be completely switched on. The heat test of tachogenerators shall be carried out at the largest working speed and the largest (permissible) number of connected secondary devices.

Table 10.7.13.1

Apparatus and devices	Inspection and checks	Measurement of insulation resistance	Test of insulation strength	Tests for compliance with operational conditions onboard a ship	Heat test	Operational test	Other special checks	Check for permissible levels of industrial radio interference voltages	Tests for immunity to electromagnetic emission
Electric engine telegraphs	+	+	+	+	+	+	+	+	+
Sensors and indicators of a rudder angle and CPP blades position	+	+	+	+	+	+	+	–	+
General alarm system – devices and contactors of visual and audible alarms	+	+	+	+	+[1]	+	+	+	+
Switchboards and telephone sets	+	+	+	+	–	+	+	+	+
Devices of a lire detection system and of a warning alarm of fire-extinguishing medium release	+	+	+	+	+[2]	+	–	+[2]	+
Devices of a system warning about starting a local application fire extinguishing system	+	+	+	+	+[3]	+	–	+[3]	+
Devices of a high bilge water level alarm system	+	+	+	+	+	+	+	+	+
Devices of a system for emergency call of engineers and of a personnel alarm	+	+	+	+	+	+	+	+	+

Apparatus and devices	Inspection and checks	Measurement of insulation resistance	Test of insulation strength	Tests for compliance with operational conditions onboard a ship	Heat test	Operational test	Other special checks	Check for permissible levels of industrial radio interference voltages	Tests for immunity to electromagnetic emission
Devices of an alarm system on presence of people inside refrigerated holds	+	+	+	+	+	+	+	+	+
Devices of a system for control of side ports, fire and watertight doors position	+	+	+	+	+	+	+	+	+
Devices of an external/internal video surveillance system	+	+	+	+	+	+	+	+	+
Devices of an alarm system on rise of explosive gases concentration	+	+	+	+	+	+	+	+	+
Devices of a cargo hold water level alarm system of bulk carriers and dry cargo ships	+	+	+	+[4]	+	+[5]	+[6]	+	+
Devices of a high and high-high cargo level alarm system	+	+	+	+	+	+	+	+	+

Symbols, refer to Table 10.7.5.1.

[1] Contactors are not subject to testing.
[2] Detectots of an automatic fire detection system and manual fire alarms are not subject to testing.
[3] Detectors are not subject to testing.
[4] In respect of protective enclosure testing – refer to Appendix 15 "Requirements for testing of a cargo hold water level alarm system of bulk carriers and single-hold cargo ships other than bulk carriers".
[5] Functionality tests shall be carried out in accordance with IMO Resolution MSC.188(79) "Performance standards for water level detectors on bulk carriers and single-hold cargo ships other than bulk carriers".
[6] Refer to Appendix 15 "Requirements for testing of a cargo hold water level alarm system of bulk carriers and single-hold cargo ships other than bulk carriers".

10.7.13.3 The operational test of all products, excepting manual detectors and contactors, shall be performed during tests for vibration resistance, shock resistance, heat stability and cold endurance at the simultaneous limiting deviations of voltages and frequency from the rated values;

in so doing:

.1 with engine telegraphs, the precision of commands and responses transmission, and the alarm functioning are checked; with monitioring devices of ship's control, the accuracy of readings;

.2 no wrong actuations of automatic detectors of a fire detection system or instant breaks of the pilot circuit connected to them shall be recorded. Simulating the action which is to activate detectors, activations shall occur within the set limits of parameters and time period;

.3 with fire alarm stations, all monitoring and alarm circuits shall function properly. No wrong activations are allowed, but the precise one with any signal coming.

10.7.13.4 Other and special checks include:

.1 check of inscriptions and symbols distinguishability;

.2 check of audible signals loudness;

.3 electroacoustical tests, measurements and checks of telephone apparatus shall be performed in accordance with the approved technical documentation for these products following the completion of mechanical and environmental tests;

.4 operational test of fire alarm stations following the completion of mechanical and environmental tests, i.e. check of operation of all types of alarms, monitoring and interlocks in all potential versions.

10.7.13.5 The check of a permissible level of industrial radio interference voltages from monitoring devices of ship's control shall be carried out across the terminals of indicators, meters in their operation from standard sensors, tachogenerators to which they shall be connected with cables of not more than 15 m long specified in the technical documentation for these devices.

10.7.14 Tests of cable products.

10.7.14.1 The scope of tests and checks of cable products is given in Table 10.7.14.1. When cable products are manufactured according to the international or national standards in accordance with 16.8.1.1, Part XI "Electrical Equipment" of the Rules for the Classification and Construction of Sea-Going Ships, the scope of tests and test methods may be changed upon agreement with the Register.

Prior to the beginning of tests and checks, the materials containing the results of testing physical, mechanical and other properties of insulation and sheathing of which the specimens were tested using the procedures specified in the approved technical documentation, shall be submitted to the Surveyor. For all products, such tests include the determination of strength at the rupture and lengthening of insulation and sheathing, of heat stability and cold endurance, thermal ageing and electrical characteristics.

For products designed for operation on open decks of ships, the sheathing resistance to seawater and solar radiation shall additionally be assessed.

For products designed for operation in engine rooms and on decks of tankers, the sheathing resistance to oil products shall also be assessed.

For cable products intended for use on decks of the mobile offshore drilling units (MODU), fixed offshore platforms (FOP), floating offshore oil-and-gas production units (FPU), drilling ships, supply vessels for drilling platforms as well as in those premises of the above ships and structures where drilling mud may spill on these products the tests for resistance of cable against drill mud shall be carried out in addition to tests for resistance to oil products in compliance with the IEC standard 61892-4. For hydrocarbon- and ether-based drill mud, such tests shall be performed in compliance with the 2007 edition of the standard (IEC standard 61892-4:2007), or in compliance with the national standards.

In the documents issued by RS for cable products, the specific types (groups) of drill mud shall be indicated, for resistance to which the relevant tests have been performed.

10.7.14.2 For testing cables or wires of a particular brand, the specimens of each structure and each number of cores with the minimal and maximum cross-sectional area, as well as with intermediate values, if needed, shall be selected. The number of specimens having the same number of cores of different cross-sections is established separately for each test.

Table 10.7.14.1

Cable products	Inspection and checks	Measurement of insulation resistance	Test of insulation strength	Tests for compliance with operational conditions onboard a ship	Test for resistance to sea water[1]	Test for resistance to oil products[1, 2] and to drill mud	Test for durability under repeated reverse bends by roller systems	Test for bend durability	Test for axial twisting durability	Test for durability to bending with axial twisting	Test for tension durability	Test for crushing durability	Test for flame resistance (flame retardance)	Special types of fire tests[3]
Cables for connecting stationary electrical equipment	+	+	+	+	+	+	–	+	–	–	+	–	+	+
Cables for connecting mobile electrical equipment (including portable)	+	+	+	+	+	+	+	+	+	+	+	+	+	+
Installation wires	+	+	+	+	+	+	–	–	–	+[4]	–	–	+	+
Fibre-optic cable	+	–	–	(+)	(+)	(+)	–	+	+	+	+	+	+	+
Subsea cable	+	+	+	(+)	+[5]	(+)	–	+	+	+	+	+	–	–

Symbols:
" + " = test is needed;
"(+)" = test performance depends on the particular product;
" – " = test is not needed.

[1] To testing are subject the products specially designed for operation on open decks of ships. The test is performed on both insulation and sheathing specimens (refer to 10.7.14.1), and cable specimens.

[2] To testing are subject the products both specially designed for operation in engine rooms, and not having such restriction. The test is carried out only on insulation and sheathing specimens (refer to 10.7.14.12).

[3] Tests for the fire resistance, halogen content, smoke emission etc. are reffered to special fire tests in relation to purpose of cables.

[4] Related to particularly flexible wires.

[5] When testing subsea cables for seawater resistance it is necessary to consider the value of hydrostatic pressure corresponding to the ultimate depth of use of cable.

10.7.14.3 The inspection and checks of cable products are carried out for the compliance with the Register approved technical documentation.

10.7.14.4 Prior to the test of insulation and the measurement of its resistance, it shall be convinced of the absence of core breaks, and of the electrical serviceability of metallic braids, sheaths and armor by means of their connection to a pilot circuit.

Irrespective of the tests of electrical insulation strength performed on the specimens subjected to the other types of tests, the electrical insulation strength shall additionally be tested on separate specimens after their holding in water for at least 6 h for products and single cores having polyvinylchloride and polyethylene insulation.

10.7.14.5 The common types of tests for compliance with operational conditions onboard a ship, such as the tests for vibration strength and shock strength of cables and wires, shall be carried out with due regard to the following conditions:

.1 at least six specimens of each largest, least and several intermediate cross-sectional areas of each structure of the given cable (wire) brand shall be prepared for testing.

All the specimens shall be separated into three equal groups regarding specimens number and structure;

.2 each specimen from the first group shall be curved like the sinusoid of the least radius permitted by technical documentation and secured on supports spaced apart according to Table 16.8.5.2 of Part XI "Electrical Equipment" of the Rules for the Classification and Construction of Sea-Going Ships. An opportunity of displacement for those specimens in their secured position shall be prevented. Excepting the securing points, the specimens shall have no contacts over their entire length.

Each specimen from the second group shall be secured without bends on four supports welded to a common vertical foundation. The distances between supports shall exceed by 25 per cent those specified in Table 16.8.5.2 of Part XI "Electrical Equipment" of the Rules for the Classification and Construction of Sea-Going Ships;

.3 the test for vibration strength of the first groups of specimens may be carried out when exposed to vibration perpendicular to their axes. The second groups of specimens shall be tested by exposures along, and perpendicularly to, axes.

In shock strength testing, the specimens of the first and second groups shall be subjected to mechanical actions initially directed perpendicularly to their axes, and then along the axes; for curved specimens – along sinusoid axes;

.4 the third group specimens shall be secured at one end each and to be freely suspended from a rack fastened on a stand. The length of the free-suspended part of a specimen shall be specified in the technical documentation for the cable (wire) of a given brand, number and cross-section area of cores. The end secured and the free-suspended part of a specimen shall be in straight line with one another. Specimens swinging with mechanical actions shall be limited along the entire length within their several diameters. Where the permissible length of the free-suspended part is too large for testing, the specimens may be shortened, if approved by the Register, compensating the mass of the lacking part with the load of the same mass fastened to the lower end of the suspended specimen;

.5 the test of free-suspended specimens for vibration strength shall be performed with the simultaneous exposure to vibration in two mutually-perpendicular directions of which one shall be lengthwise of their axes. The test for shock strength with shock loads shall be performed lengthwise of specimen axes only;

.6 during tests for vibration and shock strength, all specimens shall be energized at a voltage (excepting the single-core ones) by 20 per cent exceeding the largest working voltage of a cable (wire);

.7 specimens are considered to have passed the test if no electrical breakdown of cores insulation has occurred, no cracks and other damages to specimens have been found on protective coatings, sheaths and insulation of cores in examination without use of magnifying devices.

10.7.14.6 The provisions of 10.7.14.5 fully apply to tests of cables for connecting mobile and portable electrical equipment. Such cables shall initially be tested in hanks, and thereafter test specimens shall be cut from them according to 10.7.14.5.1.

10.7.14.7 In heat stability testing, specimens shall be in a heat chamber at the maximum ambient air temperature and under the maximum load which are permissible for a cable (wire) of a given brand in a long run.

10.7.14.8 Prior to humidity resistance testing, the specimen leads shall be brought out from a humidity chamber, fanned out and prepared for measuring insulation resistance and testing insulation strength. Cores insulation and lead sheaths shall be sealed.

10.7.14.9 Test for cold endurance. The test for cold endurance may be omitted for cables and wires specially designed for internal wiring. Usually, tests for cold endurance include tests for bending and impact test after exposure of cables to negative temperature. The standard test temperature –40 °C (cold bending) and –35 °C (cold impact) may be lowered in relation

to cable operating conditions. Methodology and results of tests are to comply with requirements of the international standard IEC 60092-350.

Upon agreement with the Register test for cold bending may be carried out according to the methodology set forth below:

.1 test specimens shall be wound in one layer around metallic hollow cylinders having diameters corresponding to the least permissible radii of specimens bending, and held in a cooling chamber at a temperature of –50 °C during the time given below:

Outside diameter of a cable, in mm	Time of holding in a cooling chamber, in h
Under 15	1
15 – 30	2
30 – 50	3
Over 50	5;

.2 after holding in a room at the temperature corresponding to normal environmental conditions of the tests, all the specimens shall be removed without unbending from the cylinders and secured in such a condition (for use in tests in such a condition for resistance to solar radiation and seawater);

.3 the results of the given test are considered to be satisfactory if no cracks, ruptures, etc. are found on sheaths.

10.7.14.10 The test for exposure to salt mist applies to cables having outer metallic braids, sheaths and armor.

10.7.14.11 The specimens prepared according to 10.7.14.9.2 shall be tested for resistance to solar radiation and seawater in order to test on the same specimens most attacks the cable products may be exposed to, in service.

10.7.14.12 The test for exposure to solar radiation are carried out according to 10.5.4.8. Thereupon these unbent specimens shall be tested for resistance to seawater as follows:

.1 the preferable composition of a solution for the test is specified in 10.5.4.6.3;

.2 the water (solution) temperature – not below 20 °C;

.3 every 2 min to 3 min the specimens shall be immersed in the solution for 10 to 15 s (specimen leads shall be brought out and reliably sealed);

.4 test duration – 5 days;

.5 on test completion, insulation resistance shall be measured and specimens insulation strength tested. If these measurements and tests give satisfactory results, the specimens have passed the tests.

10.7.14.13 Tests for durability under repeated reverse bends by roller systems, for bend durability, axial twisting durability, for durability to bending with axial twisting, for tension and crushing durability of cables intended for connecting mobile and portable electrical equipment shall be performed on standard test sets using the techniques specified in the approved technical documentation. These tests shall be carried out at normal environmental conditions. The number and details of operations with specimens shall be specified in the test program and procedure.

All the listed types of specimen tests, excepting those for tension and crushing durability, shall be performed at the voltage equal to the maximum working one the specimens are designed for, and in tests at the normal temperature, under load.

The test results are considered to be satisfactory if:

.1 cracks and ruptures of cores insulation and sheaths visible to the unaided eye are lacking;

.2 breaks of core wires are lacking;

.3 no electrical breakdowns of insulation are found and stability of load current during tests is maintained;

.4 the results of testing the electrical strength of insulation on completion of all mechanical actions are satisfactory.

10.7.14.14 The test for flame resistance (flame retardance) shall be performed on a standard test set according to the approved program and procedure.

For cable products intended for use on decks of the mobile offshore drilling units (MODU), fixed offshore platforms (FOP), floating offshore oil-and-gas production units (FPU), drilling ships, supply vessels for drilling platforms as well as in those premises of the above ships and structures where drilling mud may spill on these products the tests for resistance of cable against drill mud shall be carried out in addition to tests for resistance to oil products in compliance with the IEC standard 61892-4.

10.7.15 Tests of the busbars arranged outside of switchboards for supplying section and/or distribution boards of consumers.

10.7.15.1 The scope of tests and checks of the busbars arranged outside of switchboards for supplying section and/or distribution boards of consumers instead of cables is given in Table 10.7.15.1.

Table 10.7.15.1

Nos	Test	Requirements for test procedure	Notes
1	Temperature rise test	IEC 61439-6	
2	Short-circuit strength test	IEC 61439-6	
3	Verification of resistance and reactance	IEC 61439-6	
4	Verification of structural strength	IEC 61439-6	The enclosure of the system shall be designed to be sufficiently robust, or alternatively additionally protected, to withstand normal mechanical forces which may be expected on board ships
5	Insulation resistance test for main and auxiliary circuits	para 3.1 of Appendix 1 to Section 12	
6	High-voltage test for main and auxiliary circuits	para 3.2 of Appendix 1 to Section 12	
7	Vibration test	IEC 60068-2-6 Test Fc	
8	Fire test	IEC 60332-1-1 and IEC 60322-1-2	
9	Verification of protection degree	IEC 60529	
10	EMC tests	para 3.4 of Appendix 1 to Section 12	Only if electronic devices form part of the busbar system

10.7.16 Tests of electrical heating and cooking appliances.

10.7.16.1 The scope of tests and checks is given in Table 10.7.16.1.

Table 10.7.16.1

Stationary cooking and heating appliances	Inspection and checks	Measure-ment of insulation resistance	Measure-ment of insulation strength	Tests for compliance with operational conditions onboard a ship	Heat test	Test by dousing with water	Test of protection against abnormal modes[1]
Fuel oil and luboil heaters (including the flowing ones)	+	+	+	+	+	–	+
Heaters and similar devices for heating spaces	+	+	+	+	+	–	+
Flowing air heaters	+	+	+	+	+	–	+
Drying cabinets	+	+	+	+	+	–	+
Heating cables[2]	+	+	+	(+)	+	+	+[3]

Symbols:
" + " = test is needed;
"(+)" = test performance depends on the particular products;
" – " = test is not needed.

[1] Including protection against the dangerous elevation of a temperature, the drop of a liquid level, etc. (the protection functioning is checked for compliance with the values of parameters set in the Register approved technical documentation).
[2] Heating cables shall be additionally tested as all cables for flame retardance (refer to 10.7.14.14), resistance for cold bending and cold impact as well as resistance to exposure to sea water and oil products (refer to 10.7.14.1).
[3] Test to be performed together with control devices (thermostats, temperature sensors etc).

10.7.16.2 If the cases of electric heating devices are pressurized in operation with water steam or fuel oil or luboil vapours (or may be pressurized with these resulting a malfuction or personnel's mishandling), and if therewith they are subject to 1.3.2.1, Part X "Boilers, Heat Exchangers and Pressure Vessels" of the Rules for the Classification and Construction of Sea-Going Ships, then additionally to the specified in Table 10.7.16.1, they and their safety (emergency) valves shall pass tests in accordance with 9.7.3.

10.7.17 Tests of items and devices for installation, splcing and connection of cables and wires.

10.7.17.1 The scope of tests and checks is shown in Table 10.7.17.1.

Table 10.7.17.1

Products	Inspection and checks	Testing of insulation strength	Tests for compliance with operational conditions onboard a ship	Safe working load test	Heat test	Flame exposure test	Special tests
Connection terminals	+	+	(+)	+	+	+	+
Cable glands	+	–	(+)	+	–	(+)	+
Cable lugs, bushings and cable termination	+	+	(+)	+	+	(+)	+
Ladders and cable trays (metal)	+	–	(+)	+	–	–	–
Ladders and cable trays (plastic)	+	–	(+)	+	–	+	–
Cable ties (metal)	+	–	(+)	+	–	–	–
Cable ties (plastic)	+	–	(+)	+	–	+	–

Products	Inspection and checks	Testing of insulation strength	Tests for compliance with operational conditions onboard a ship	Safe working load test	Heat test	Flame exposure test	Special tests
Symbols: " + " = test is needed; "(+)" = test performance depends on the particular product; " – " = test is not needed.							

10.7.17.2 Tests of cable ladders, trays and ties for safe working load (SWL):

.1 ready-assembled specimens are tested for SWL at minimum and maximum working temperature. In case of mechanical properties of specimens changing not more than by +5 per cent in all ranges of temperature, it is allowed to perform test at any temperature within this range;

.2 during test the load applied to the specimen is increased from zero to nominal SWL value. Discrete change of load is allowed with a step of not more than 25 per cent of the nominal value;

.3 bending is measured in certain places every 5 min after application of the full load. Tests are finished when increment of bending is less than 2 per cent;

.4 no damage or cracks visible by unaided eye shall be observed on a specimen or its joints after test. The value of bending measured in the middle of the tested specimen shall not be greater than 1 per cent of the length of span. The value of transverse bending in the middle part of each span shall not exceed 5,0 per cent of specimen width;

.5 at the final stage the load applied to the specimen is increased up to 170 per cent SWL. The specimen shall withstand testing without failure, meanwhile deformation and twisting of specimen is allowed;

.6 specimens of cable ties are tested at standard fixing of cables on cable ladders and trays at 100 per cent and 170 per cent SWL. Duration of test is the same as for cable ladders and trays. Loosening of cable fixing is not allowed.

10.7.17.3 Testing of cable ladders, trays and ties for flame exposure (flame retardance). Only non-metallic straight sections of cable ladders and trays as well as non-metallic cable ties are tested.

10.7.17.4 Cable ties (metallic and plastic) are tested to measure the ultimate tensile strength. The specimen is fixed around split-type cylinder of the test machine in a standard position with the lock of the cable tie located opposite to split line to ensure maximum force applied to lock when parts of cylinder are drawn separately. Ultimate tensile strength shall be not less than the value given in the product specification.

10.8 SURVEY OF PRODUCTS AT ESTABLISHED PRODUCTION AT THE FIRM (MANUFACTURER)

10.8.1 Technical supervision during manufacture of electrical equipment products at steady production at the manufacturer's is effected by surveying the finished products that have passed checks and tests carried out by technical control bodies of the manufacturer.

10.8.2 The survey of a product shall provide for:

.1 the check of documentation for accessories and materials subject to the Register supervision in accordance with the RS Nomenclature, and of the documents of technical control bodies for a finished product;

.2 the check of technical documentation for a product;

.3 the check of product and spare parts completeness;

.4 performance of external and internal examinations;

.5 the operational test;

.6 the product tests specified in 10.8.3 and 10.8.4.

10.8.3 All the products to be surveyed are subject to the following:

.1 an inspection and check for technical documentation conformity, a check of workmanship of assembly, wiring and earthing units, and for complete products, of accessories earthing as well;

.2 measurement of insulation resistance (in a practically cold state);

.3 the test of the electrical strength of insulation between current-carrying elements, circuits, as well as between these and the case (in a practically cold state).

10.8.4 For single types of equipment, the scope and conditions of product tests at steady production are specified in Tables 10.8.4-1 to 10.8.4-5.

10.8.5 With the satisfactory results of tests and checks, the Register Surveyor issues a certificate for a product according to Table 5.2-1, Part I "General Regulations for Technical Supervision".

Table 10.8.4-1

Products	Tests and checks in accordance with 10.8.2 and 10.8.3	Test at increased speed[1]	Measurements of collector runout (of slip rings), check of axial displacement of a rotor (armature)	Test of interturn insulation strength	Check in operation at nominal parameters and short-time current overload	Check of interlocks, protection and alarm operation	Other specific checks and tests
Electrical machines[2]	+[3, 4]	+[5]	+[6]	+	+[7]	+	+[8]
Electromagnetic couplings	+[3, 4]	+	+[6]	+	+	–	–
Transfomers	+	–	–	+	+[7]	–	+[9]
Static converters	+	–	–	+[10]	+	+[11]	+[12]

[1] Performed prior to insulation testing.
[2] Synchronous and d.c. generators, induction and d.c. motors, converters, rotary amplifiers.
[3] If necessary (as a rule, for large produscts), with measurements of air gaps, with a check of documents on balancing, testing a watercooling system for tightness and strength.
[4] With mass production of machines rated up to 5 kW, insulation strength may be tested during 1 s at a voltage equal to 1,2 times the full normalized test voltage.
[5] Excepting cage induction motors.
[6] As a rule, applies to large products. With propulsion plant motors and couplings, the runout of a shaft end shall also be measured.
[7] For a.c. machines and transformers, the check may be replaced by an open-circuit and short-circuit tests.

Products	Tests and checks in accordance with 10.8.2 and 10.8.3	Test at increased speed[1]	Measurements of collector runout (of slip rings), check of axial displacement of a rotor (armature)	Test of interturn insulation strength	Check in operation at nominal parameters and short-time current overload	Check of interlocks, protection and alarm operation	Other specific checks and tests

[8] Check of commutator machines switching at the rated load and short-time current overload, the check of limits of voltage setting variation for generators with a static field system, the check of electric heating of the machine, the measurement of voltage between the insulated bearing base and foundation, as well as between shaft ends of such machines.
[9] With nonflammable liquid-filled transformers, the tank test for tightness and the test of a dielectric sample taken from the tank.
[10] Applies to converter transformers lacking such a test.
[11] Check of overload and short-circuit protection in operation.
[12] Check of operation at load loss and increase, the check of control apparatus and filter operation.

Table 10.8.4-2

Products	Tests and checks in accordance with 10.8.2 and 10.8.3	Check of operation of drives and indicators of switching positions	Check of interlocks operation	Check of adjustment and operation of elements (releases, integrated relays, etc.)	Check of electrical resistance value	Opera-tional test	Other specific checks
Circuit breakers	+	+	+	+	–	–	–
Breakers, switches, disconnectors, push-button and limit switches	+	–	–	–	–	+	–
Fuses	+	–	–	–	+[1]	–	+[2]
Contactors, contact relays	+	–	–	–	–	–	+[3]
Starters, controllers	+	–	+	+	–	+	–
Rheostats	+	+	–	+	+	–	–
Resistors in boxes	+	–	–	–	+	–	–
Magnetic amplifiers, apparatus, blocks and modules with contactless elements	+					+	
Reactors, chokes	+	–	–	–	+[4]	–	–
Generator protection devices	+	–	+	+	–	+	–
Electrical measuring (switchboard) instruments	+	–	–	–	–	+[5]	+[6]
Electical switchboards and consoles	+	+	–	–	–	+[7]	–
Apparatus and devices for intercommunication and alarm	+	–	–	–	–	+	–
Ship's control and monitoring devices[8]	+	–	–	–	–	+	+[9]

Products	Tests and checks in accordance with 10.8.2 and 10.8.3	Check of operation of drives and indicators of switching positions	Check of interlocks operation	Check of adjustment and operation of elements (releases, integrated relays, etc.)	Check of electrical resistance value	Opera-tional test	Other specific checks
Electrical heating and cooking appliances	+	–	–	–	–	–	+[10]
Lighting fixtures	+	–	–	–	–	–	–
Busducts	+	+	–	–	–	–	–

[1] Applies to fuse-links, performed periodically by sampling.
[2] Test for the maximum non-fusing current and minimum fusing current. Performed periodically by sampling.
[3] Check of contact gaps, follows-up and pressure. Check of actuation parameters.
[4] Measured inductive impedance.
[5] Performed with instruments inclined. Periodical sampling inspection of operation at ambient air temperatures above 25 °C; at mechanical actions (in a reduced scope as compared with prototype tests); at the limiting permissible deviations of voltage and frequency from rated values.
[6] Determination of a basic error and variation.
[7] Applies to control, monitoring and alarm circuits.
[8] Sensors (tachogenertors) and indicators of tachometers of propeller shafts shall be additionally tested as electrical machines and electrical measuring instruments respectively.
[9] Check of accuracy of indicator readings.
[10] Test of fuel oil and luboil heaters for tightness and strength (or check of documents if such tests are carried out in production), as well as of products operating under a steam pressure, or potentially being pressurized with steam, if these are subject to the requierements of 1.3.2.1, Part X "Boilers, Heat Exchangers and Pressure Vessels" of the Rules for the Classification and Construction of Sea-Going Ships. Check of operation of protection against abnormal operating modes (an elevated temperature, the drop of a liquid level, etc.).

Table 10.8.4-3

Complete sets of products[1]	Inspection and check for comp-liance with technical documentation	Measurements of insulation resistance in a practically cold state	Starts, stops, reverses, operation at each speed in no-load	Check of electromagnetic brake operation	Check of interlocks, protection and alarm operation	Check of operation of a switched discharging resistor circuit[2]	Check of an automatic start after voltage recovery[3]	Test combined with a driving mechanism[4]	Operational test of all systems in combination with an internal combustion engine	Measurements of insulation resistance in a hot state
Electric drives of propulsion plants[5]	+	+	+	(+)	+	(+)	–	(+)	–	+
Other electric drives at manufacturers'	–	–	+	+[6]	+	+	+	–	–	–
Ditto at manufacturers' of machinery provided with electric drives	+	+	+	+	+	+	+	+	–	+
Electrical equipment of electrically-started internal combustion engines at its manufacturers'									+[7]	–
Ditto at manufacturers' of internal combustion engines	+	+	–	–	–	–	–	–	+	+

Complete sets of products[1]	Inspection and check for comp-liance with technical documentation	Measurements of insulation resistance in a practically cold state	Starts, stops, reverses, operation at each speed in no-load	Check of electromagnetic brake operation	Check of interlocks, protection and alarm operation	Check of operation of a switched discharging resistor circuit[2]	Check of an automatic start after voltage recovery[3]	Test combined with a driving mechanism[4]	Operational test of all systems in combination with an internal combustion engine	Measurements of insulation resistance in a hot state

[1] It is implied that all the other products of the set (electrical machines, apparatus, etc.) have passed the necessary acceptance tests according to the relevant programmes.
[2] Applies to d.c. shunt-wound and compound-wound motors.
[3] Applies to circuits of the steering gear and watertight door drives.
[4] Performed according to the Register approved programme and the procedure for mechanism (arrangement) testing.
[5] Bench tests of composite (hybrid) propulsive systems shall be carried out in accordance with Appendix 17.
[6] Check of braking electromagnet (if no brake) operation.
[7] If the internal combustion engine is lacking, the check is performed on specially equipped stands.

Table 10.8.4-4

Products	Tests and checks in accordance with 10.8.2 and 10.8.3	Check for tightness[1]	Check of rated capacity	Measurement of loss-angle tangent	Check of automation operation
Accumulator batteries (accumu-lators[2])	+[3]	+[4]	+[5]	–	–
Capacitors for raising a power factor	+	+	+	+	–
Capacitor sets for raising a power factor	+	–[6]	+	–[6]	+

[1] Performed in any effective way.
[2] If intended for independent supply.
[3] Restricted to the inspection and check for compliance with technical documentation.
[4] Applies to acid battery monoblocks.
[5] With the check of initial and final voltage, current, a discharging time, an electrolyte temperature, etc. The periodicity and scope of sampling shall be determined by the manufacturer. The periodicity and scope of sampling shall be subject to special consideration by the Register.
[6] If capacitors have not passed such a test, the one shall be carried out.

Table 10.8.4-5

Tests (checks) of cables and wires	Inspection and check for compliance with technical documentation	Check of integrity (continuity) of cores, shields, braids and other metallic sheaths	Test of insulation strength of cores prior their sheathing[1] and of finished products after holding in water	Measurements of insulation resistance	Tests of mechnical, thermoplastic and electrical properties of materials used for cores insulation and sheaths[2]
On each factory length	+	+	+[1]	+	–
Periodically by sampling[3]	–	–[4]	–[4]	–	+

[1] The Register may allow cores insulation testing with use of a dry test apparatus for a breakdown test.
[2] If the operational inspection is specified.
[3] The periodicity and scope of sampling shall be stipulated by the manufacturer's technical documentation.
[4] The test is performed if Footnote 1 is applicable.

Along with the test procedures and checking of the electrical equipment, as well as the test values given in 10.4 to 10.8, the recommendations and provisions of these appendices may be used instead or in addition thereto.

APPENDIX 1

PERMISSIBLE VALUES OF ELECTRICAL EQUIPMENT INSULATION RESISTANCE

1. Insulation resistance to case, as well as between phases (poles) of electrical equipment shall not be less than that specified in the Table.

Minimum insulation resistance for electrical equipment above 500 V rating as well as for electrical machines with an electric power above 1000 kW shall be determined in compliance with national and international standards.

2. It is recommended that, in measurements at the firm (manufacturer), the insulation resistance of electrical cable cores R_i, in MOhm/km, between each insulated core of cable products and the other cores in any sequence, and the metallic sheath (armor, screen) of a cable or, if the latter is lacking, an electrode in the water wherein the product is immersed, shall not be less than the one according to the formula

$$R_i = k_i \log D/d,$$

where k_i = insulation resistance constant;
d = design core diameter, in mm;
D = design insulation diameter equal to $d + 2t$ (t = insulation thickness); for multicore cables having overall insulation, t= total of thicknesses of the core insulation and overall insulation, in mm.

Table

Electrical equipment	Minimum insulation resistance at an environment temperature 20±5 °C and normal humidity, MOhm	
	In cold state	In hot state
Transformers	5	2
Switchboards	1	–
Switch, protection and control gear	5	–
Ship's devices for intercommunication, alarm, monitioring and control	20	–
Cooking and heating appliances[1]	1	0,5
Static converters	10	5
[1] For voltages above 5000 V, the insulation resistance is assumed on the basis of 2 kOhm per 1 V of rated voltage.		

APPENDIX 2

PERMISSIBLE TEMPERATURES

1. Permissible temperatures of heating insulating materials of different classes for long-term operation are as follows:

Insulation class	Permissible temperature, in °C
A	105
E	120
B	130
F	155
H	180
C	above 180

If insulation consists of different materials, the temperature of potential heating for each of these materials shall not exceed the one permissible for a given material.

If insulation consists of several layers of different materials and it is impractical to measure the temperature of single layers heating, the permissible temperature for use of the lowest class material is considered as the permissible one of such insulation heating.

The material used for mechanical protection and spacers only may be of a lower insulation class.

2. The permissible excesses of temperature for electrical machines are given in Table 1. They are determined for a cooling air temperature of 45 °C.

Table 1

Permissible temperature excesses for electrical machines at a cooling air temperature of 45 °C

Nos.	Parts of electrical machines	Class of insulating material														
		A			E			B			F			H		
		Measurement method (instrument)														
		Thermometer	Resistance method	Thermal detectors placed in a slot beetween coils	Thermometer	Resistance method	Thermal detectors placed in a slot beetween coils	Thermometer	Resistance method	Thermal detectors placed in a slot beetween coils	Thermometer	Resistance method	Thermal detectors placed in a slot beetween coils	Thermometer	Resistance method	Thermal detectors placed in a slot between coils
1	Windings of ac synchronous machines rated 5000 kVA and over or having a core length of 1 m and more	–	55	55	–	65	65	–	75	75	–	95	95	–	120	120
2	Windings of ac machines rated under 5000 kVA and having a core length under 1 m	45	55	–	60	70	–	65	75	–	80	95	–	100	120	–

Nos.	Parts of electrical machines	Class of insulating material														
		A			E			B			F			H		
		Measurement method (instrument)														
		Thermometer	Resistance method	Thermal detectors placed in a slot beetween coils	Thermometer	Resistance method	Thermal detectors placed in a slot beetween coils	Thermometer	Resistance method	Thermal detectors placed in a slot beetween coils	Thermometer	Resistance method	Thermal detectors placed in a slot beetween coils	Thermometer	Resistance method	Thermal detectors placed in a slot between coils
3	Field windings of d.c.-excited d.c. and a.c. machines excepting those in items 5 to 8 of the Table	45	55	–	60	70	–	65	75	–	80	95	–	100	120	–
4	Armature windings connected to a commutator	–	–	–	–	–	–	–	85	–	–	105	–	–	–	–
5	Field windings of d.c.-excited nonsalient pole machines	–	–	–	–	–	–	–	85	–	–	105	–	–	–	–
6	Single-row field windings with bare surfaces	60	60	–	75	75	–	85	85	–	105	105	–	130	130	–
7	Bar windings of asynchronous machine rotors	60	60	–	75	75	–	85	85	–	105	105	–	130	130	–
8	Field windings of low resistance with several layers and compensation windings	55	55	–	70	70	–	75	75	–	95	95	–	120	120	–
9	Insulated windings continuously closed on itself	55	–		70	–	–	75	–	–	95	–	–	120	120	–
10	Noninsulated windings continuously closed on itself	The excess of a temperature of these parts shall not reach the values, which would cause a risk of damaging insulating and other adjacent materials														
11	Steel cores and other parts having no contact with windings															
12	Cores and other steel parts in contact with windings	55	–	70	–	–	–	75	–	–	95	–	–	120	120	–
13	Unprotected and protected commutators and slip rings	55	–	60	–	–	–	75	–	–	85	–	–	95	95	–

N o t e s : 1. For windings of a.c. machines for rated voltage over 11000 V, the limiting permissible excesses of temperature shall be reduced by 1,5 °C for each complete and incomplete 1000 V above 11000 V in measurements with a thermometer or by 1 °C when a thermal detector is used.

2. The limiting permissible excesses of a windings temperature specified in items 2 and 4 of the Table, measured by the resistance method, may be increased by 5 °C for enclosed machines for voltage not more than 1500 V.

3. The specified class of insulating material as per item 13 of the Table applies to the commutator or slip ring insulation, or else to the insulation of windings connected thereto if the insulation class of these latter is below that of the commutator or slip rings.

4. The resistance method is generally used for measuring the excess of a winding temperature. The use of a thermometer is allowed only in those cases when the above method cannot be applied due to certain reasons; the limiting permissible excesses of temperatures for these cases are specified in the Table.

5. If a thermometer indication is desirable additionally to the data received by the rsistance method, the temperature excess measured in the most heated accessible point shall not exceed 60 °C for insulation class A, 75 °C for insulation class E, 85 °C for class B, 105 °C for class F and 130 °C for class H.

6. The permissible temperature excesses for commutators and slip rings may exceed the values specified in item 13 of Table if the following conditions are met:

the temperature excess for insulating materials of commutators and slip rings and their related windings does not exceed the values specified in items 4 and 7 of the Table for materials of the relevant classes;

the temperature does not reach the values dangerous for solder joints.

If a cooling medium temperature is below the specified values, temperature excesses may be increased accordingly, but not more than by 10 °C.

If a cooling medium temperature is above the specified values, the temperature excess shall be accordingly reduced.

3. The temperature excess for transformers operating at rated loads and an environmental temperature +45 °C shall not exceed values specified in Table 2.

Table 2

Parts of a transformer	Method for measuring	Permissible temperature exceess, in °C , for insulation classes				
		A	E	B	F	H
Windings	Resistance	55	65	75	95	120
Cores and other parts of a transformer	Temperature	The temperature excess shall not exceed the temperatures permissible for adjacent materials				

4. The permissible excesses of temperature for different parts of breakers relative to an environmental temperature +45 °C shall no exceed values specified in Table 3.

Table 3

Nos.	Parts of a breaker			Permissible temperature excess, in °C
1	Solid spring contacts	Of copper	In continuous duty	35
			In 8 h continuous running duty, intermittent and short-time duties	55
		Of silver or with silver inserts		Refer to Footnote 1
		Of other materials or metal-ceramic agglomerates		Depending on the type of metal or metal-ceramic agglomerate[1]
2	Brush contacts			25
3	Busbar joints	Unprotected against oxidization in the point of contact		45
		Protected against oxidization in the point of contact	By a tinning or cadmium coating	55
			By silver coating	75
		Soldered or welded		75
4	Magnets, cores and the like			Like the insulation in contact with these parts
5	Manual controls		Of metal	10
			Of insulating material	20
6	Cases, shields or parts unprotected against an inadvertent touch			35
7	Rheostat cases protected against an inadvertent touch			200
8	Air-cooled rheostats in measurements at a distance of 25 mm			175

[1] The temperature may be exceeded up to such a value when a heated part does not cause the increase of an adjacent parts temperature above the temperatures permissible for them.

APPENDIX 3

DEGREE OF IRREGULARITY OF ELECTRICAL UNITS RUNNING

1. The degree of electrical units running irregularity per revolution, when driven by piston engines, shall not exceed the values given in the Table (also refer to 2.4, Part IX "Machinery" of the Rules for the Classification Construction of Sea-Going Ships).

Table

Number of motor pulses per second	Degree of running irregularity for a motor with the number of cylinders	
	≤2	>2
Under 10	1/75	1/150
From 10 to 20	1/75	Pulses per second/1500
Above 20	1/75	1/75

2. The degree of running irregularity per revolution for all loads including the rated load at the rated speed is calculated by the formula

$$S = (\omega_{\max} - \omega_{\min})/\omega_m$$

where $\omega_{\max}$ = maximum;
$\omega_{\min}$ = minimum; and
ω_m = mean speed respectively.

APPENDIX 4

RECOMMENDATIONS ON CHECKING MECHANICAL STRENGTH OF ELECTRICAL APPARATUS

1. Distributing breakers are recommended to manufacture so that being electrically-unloaded they may withstand the on-off test for the number of cycles specified in Table 1.

Table 1

Rated current of a breaker, in A	Adjustment and service provided in a design		Adjustment and service ignored in a design
	without adjustment and service	with adjustment and service[1]	
25 – 314	1000	20000	8000
315 – 1249	500	10000	4000
1250 – 2499	500	5000	–
over 2500	By agreement with the Register		
[1] The manufacturer shall determine which, and for which elements, service and adjustment are required after producing no less than the number of cycles specified in column 2 which will ensure the mechanical strength corresponding to the number of cycles in column 3.			

2. Manoeuvering breakers are recommended to manufacture so that their mechanical strength may match the intermittent duty of operation and they may withstand the on-off test according to Table 2.

Table 2

Operation class	Number of cycles per hour	Mechanical strength expressed in terms of the total number of cycles, 10^6
0	До 6	0,05
I	30	0,25
II	150	1,20
III	600	5,0
IV	1200	10,0

3. The mechanical strength of safety jacks with knife contacts shall be such that they may withstand the on-off test for at least 500 cycles (one cycle implies one insertion and one withdrawal of a cartridge fuse link from the jack). Following that test, no jam of the cartridge shall be observed, and the voltage drop across two-way make-before-break contacts shall not exceed the permissible one.

4. The mechanical strength of a brake is recommended to be such that the latter may withstand the test for at least 106 activations. The test shall not result in mechanical and electrical damages, as well as in the mechanical wear of parts preventing the reliable operation of the brake.

5. It is recommended that the operation stability of an electromagnetic brake mated with an appropriate drive be at least 10^5 activations.

APPENDIX 5

RECOMMENDATIONS ON CHECKING SWITCHING STRENGTH, NORMAL AND SHORT-TIME SWITCHING CAPACITY OF APPARATUS

1. It is recommended that the switching strength (under load) of distributing and manoeuvering breaker contacts determined for the current and voltage corresponding to the normal switching capacity be at least not less than the mechanical strength of a product with nonremovable switching elements, specified in Tables 1 and 2, respectively, of Appendix 4, or not less than 1/20 of that mechanical strength for products with removable switching elements. Tests therewith shall be carried out for work categories AC3, DC3 and DC4 specified in Table 1 of the Appendix.

Table 1

Recommended switching capacity of manoeuvering breakers

	Load type	Normal						Short-time					
		Switch-on			Switch-off			Switch-on			Switch-off		
	Alternating current	I/I_r	U/U_r	cos φ[1]	I/I_r	U/U_r	cos φ[1]	I/I_r	U/U_r	cos φ[1]	I/I_r	U/U_r	cos φ[1]
AC_1	Active or low-inductance load	1	1	0,95	1	1	0,95	–	–	–	–	–	–
AC_2	Start of phase-wound rotor motors, reverse-current braking	2,5	1	0,65	2,5	1	0,65	4	1,1	0,65	4	1,1	0,65
AC_3	Start of squirrel-cage motors, tripping of the motor while running	6	1[2]	0,35	1	0,17	0,35	10[3]	1,1	0,35	8[3]	1,1	0,35
								8[4]			6[4]		
AC_4	Start of squirrel-cage motors, pulse operation, change of rotation direction	6	1	0,35	6	1	0,35	12[3]	1,1	0,35	10[3]	1,1	0,35
								10[4]			8[4]		
	Direct current	I/I_r	U/U_r	cos φR	I/I_r	U/U_r	cos φ[1]	I/I_r	U/U_r	cos φR	I/I_r	U/U_r	cos φ[1]
DC_1	Active or low-inductance load	1	1	1	1	1	1	–	–	–	–	–	–
DC_2	Start of shunt-wound motors and their tripping while running	2,5	1	2	1	0,1	7,5	4	1,1	2,5	4	1,1	2,5
DC_3	Start of shunt-wound motors, pulse operation, change of rotation direction	2,5	1	2	2,5	1	2	4	1,1	2,5	4	1,1	2,5
DC_4	Start of series-wound motors and their tripping while running	2,5	1	7,5	1	0,3	10	4	1,1	15	4	1,1	15
DC_5	Start of series-wound motors, pulse operation, change of rotation direction	2,5	1	7,5	2,5	1	7,5	4	1,1	15	4	1,1	15

I_r = rated working current; U_r = rated working voltage;
I = making or breaking current; U = mains voltage.

[1] Tolerance: cosφ ±0,05.
[2] Permitted: $U<U_r$.
[4] For I_r>100 A.
[3] For I_r ≤ 100 A.
[5] Tolerance: φ/R±15%.

Table 2

Class	Relative duty time, in per cent	Duty cycle duration, in s	Load duration, in s
I	60	120	72
II	60	24	14,4
III	40	6	2,4
IV	40	3	1,2

2. It is recommended that the switching strength of auxiliary contacts of contactors be not less than the mechanical strength of their main contacts. The switching strength of auxiliary contacts shall be at least not less than 1/20 of the mechanical strength of main contacts if the auxiliary ones are readily replaceable.

3. It is recommended that the switching capacity of manoeuvering breakers be not less than that specified in Table 1.

4. It is recommended that the relative time of electrical contactors operation and the full time of one switching cycle be not less than those specified in Table 2.

5. It is recommended that the number of cycles in testing the short-time switching capacity of manoeuvering breakers be not less than that specified in Table 3.

Table 3

Breakers	Work category	Control voltage	Number of cycles	
			Switch-on	Switch-off
Manually-operated manoeuvering	AC_1, AC_2, DC_1, DC_2, DC_3, DC_4, DC_5	–	20	20
	AC_3, AC_4	–	100	20
Electromagnetic contactors	AC_1, AC_2, DC_1, DC_2, DC_3, DC_4, DC_5	*Ur*	20	20
	AC_3, AC_4	$0{,}85U_r$	50	–
		$1{,}1U_r$	50	
		U_r	–	20

APPENDIX 6

RECOMMENDATIONS ON CHECKING BREAKING CAPACITY OF CIRCUIT BREAKERS

1. It is recommended that the breaking capacity of circuit breakers during tests be checked by currents not less than those specified in Table 1.

Table 1

Rated continuous current, in A	Rated breaking capacity, in kA			
	Alternating current		Direct current	
	500 V, 50 Hz	cos φ	220V	φ/*R*, m/s
63	5	0,5	4	10
100	8	0,5	6	10
160	10	0,4	8	10
250	15	0,3	15	15
400	25	0,25	25	15
630	30	0,25	30	15
1000	40	0,25	–	15
1600	50	0,25	–	15
2500	60	0,2	–	15
4000	80	0,2	–	15

2. The circuit breaker shall be tested for the proper cutoff of the rated breaking current at 110 % of the rated switching voltage.

3. If the breaking capacity in connecting to the terminals of movable and fixed contacts is different, the one shall be specified in documentation for both cases.

4. D.c. circuit breakers shall have the rated making capacity equal to the rated breaking capacity of short-circuit current.

5. It shall be ascertained in tests that the rated making capacity of an ac circuit breaker is at least equal to the product of the rated breaking current specified in Table 1 by the relevant factor k in Table 2.

Table 2

Breaking current, in kA	Cos φ	k
Under 10	0,5	1,7
10 to 20	0,3	2,0
20 to 50	0,25	2,1
above 50	0,2	2,2

6. The circuit breaker shall properly switch on and off a test circuit having parameters corresponding to the rated breaking capacity with the following cycle: F – *t* – NF – *t* – NF where F = turn-off and NF = turn-on and -off of short-circuit current following one immediately after another, *t* = time interval of 15 s to 3 min.

7. Testing circuit breakers according to the switching cycle specified in item 6, the following results shall be obtained:

.1 no stationary arc shall appear across contacts and no arc overthrow is allowed between poles and earthed parts of the circuit breaker, or to the parts at the other voltage;

.2 arc outbreak shall be within the limits provided by a protection zone and not to threaten the service personnel;

.3 the circuit breaker shall not be damaged and shall be fit for operation under the normal working conditions after the replacement of auxiliary contacts;

.4 no current-carrying elements burning-off and contacts weld are allowed, and the circuit breaker shall open at a rated insertion force;

.5 the temperature reached by circuit breaker contacts during the heat test, carried out after the test for switching capacity, shall not cause damages to the adjacent insulation and the break of elasticity of metallic elements functioning as springs;

.6 no damages to the release and relay are allowed, and time charateristics of thermal releases (relays) checked following the short-circuit test shall remain within the tolerance limits.

APPENDIX 7

EVALUATION OF DEGREE OF SPARKING AT ELECTRICAL MACHINE COMMUTATORS

Sparking degree	Characteric of sparking degree	Condition of a commutator and brushes
1	No sparking (sparkless commutation)	Blackening on the commutator and traces of carbon deposit on brushes are lacking
1,25	Light sparking under the small part of a brush edge	Ditto
1,5	Light sparking under the large part of a brush edge	Blackening traces emerge on the commutator surface, which are readily wiped out with petrol, as well as carbon deposit traces on brushes
2	Sparking under the entire brush edge. Allowed in short-time load and overload kicks only	Blackening traces emerge on the commutator surface, which cannot be wiped out with petrol, as well as carbon deposit traces on brushes
3	Essential sparking under the entire brush edge with large-sized escaping sparks. Allowed only for the moment of direct (without rheostat steps) switch-on or reverse of machines if a commutator and brushes therewith remain in the condition suitable for further operation	Essential blackening on the commutator surface, which cannot be wiped out with petrol, as well as burning and failure of brushes
N o t e . The key indicator of commutation evaluation is the condition of a commutator and brushes.		

APPENDIX 8

INSULATION DISTANCES

Both the air and insulation material surface distances between alive parts of different potentials, or between alive parts and earthed metallic parts or an equipment frame shall be consistent with working voltages and operational conditions of equipment with due regard for the insulating materials used.

Where instructions on insulation distances are lacking in technical documentation, the data in the Table of this Appendix are recommended.

The insulation distances for equipment rated over 7500 V shall be determined in compliance with national and international standards.

Table

Electrical equipment	Insulation distances	Insulation distances, in mm, for voltage, in V																			
		≤60		61 – 250		251 – 500		501 – 750		751 – 1000		1001 – 1500		1501 – 2000		2001 – 3000		3001 – 5500		5501 – 7500	
		a	b	a	b	a	b	a	b	a	b	a	b	a	b	a	b	a	b	a	b
Switchgear, electrical machines, transformers	Between noninsulated busbars and earthed metallic parts, or between noninsulated busbars related to different poles or phases	6	8	8	14	14	20	30	–	30	–	40	–	50	–	60	–	90	–	105	–
	Between live parts other than busbar joints (not related to commutators)	3	5	5	7	8	10	10	14	14	20	20	28	28	36	36	50	55	80	75	105
Electrical apparatus: wiring accessories of intercommunication, ship's control and monitoring devices	Between noninsulated busbars and earthed metallic parts, or between noninsulated busbars related to different poles or phases	6	8	8	14	14	20	30	–	30	–	40	–	50		60	–	90	90	–	105
	Between live parts (other than busbar joints)	–	–	–	–	–	–	10	14	14	20	20	28	28	36	36	50	50	75	75	105
Electrical cooking appliances, lighting fixtures, wiring accessories	Between live parts and earthed metallic parts	3	4	5	7	8	10	–	–	–	–	–	–	–	–	–	–	–	–	–	–

N o t e . a – air distance; b – insulation material surface distance. Distances in column "b" are related to the materials tolerant to surface-leakage currents.

APPENDIX 9

DEGREES OF PROTECTION OF ELECTRICAL EQUIPMENT

The degree of electrical equipment protection is denoted by the letters IP and two numerals: the first stands for the degree of equipment protection against ingress inward of solid foreign objects (refer to Table 1), the second, against penetration of water (refer to Table 2).

Table 1

First numeral designating a protection degree	Characterization of electrical equipment protection against ingress of solid foreign objects
0	Equipment protection against ingress inward of solid foreign objects is lacking
1	Equipment protection against ingress inward of solid foreign objects with diameters 52,5 mm and above
2	Equipment protection against ingress inward of solid foreign objects with diameters 12,5 mm and above
3	Equipment protection against ingress inward of solid foreign objects with diameters 2,5 mm and above
4	Equipment protection against ingress inward of solid foreign objects with diameters 1 mm and above
5	Equipment protection against harmful ingress of dust Dust ingress is not fully prevented, but the dust cannot penetrate into a case in the amount sufficient for damaging the equipment or upsetting its satisfactory operation
6	Full equipment protection against ingress of dust

Table 2

Second numeral designating a protection degree	Characteric of electrical equipment protection against ingress of water and other liquids
0	Protection is lacking
1	Protection against vertically-falling water condensate drops Water drops vertically-falling onto the case shall not have an adverse effect upon equipment
2	Protection against water drops Falling water drops shall not have an adverse effect upon equipment when a case is inclined at an angle of up to 15° to the vertical[1]
3	Protection against raining
4	Raining at an angle equal to, or lesser than, 60° to the vertical shall not have an adverse effect upon equipment Protection against splashing
5	Water splashes from any direction shall not have an adverse effect upon equipment Protection against water jets The water jet produced with a nozzle from any direction at certain conditions shall not have an adverse effect upon equipment
6	Protection under condtions on the ship's deck (including watertight deck equipment) When exposed to sea waves, water shall not penetrate in the hull under certain conditions
7	Protection against immersion in water Water shall not penetrate into the hull under the pressure and during the time specified
8	Protection during indefinitely extended immersion in water under a certain specified pressure[2]

Second numeral designating a protection degree	Characteric of electrical equipment protection against ingress of water and other liquids

[1] The designation of a given degree of protection may be supplemented with the index "C" (e.g. IP22C) which specifies stricter requirements for the angle of raindrops falling. The protection degree corresponding to the supplementary index is specified in national standards or specifications effective in the country.
[2] The electrical equipment having the enclosure fit for underwater operation by its design and insulation is considered to be equivalent, as to its protection, to protection degree 8.

The protective enclosure of electrical equipment rated under 1000 V is specified in Table 3.

Table 3

Protective enclosure of electrical equipment rated under 1000 V

Enclosure protecting against ingress inward of solid foreign objects	Protection degree (the first numeral)	Enclosure by water ingress protection								
		Unprotec-ted	Drop-proof		Splash-proof		Waterproof		Immersible	
		Protection degree (the second numeral)								
		0	1	2	3	4	5	6	7	8
Unprotected	0	IP00	IP01	–	–	–	–	–	–	–
Protected against ingress of foreign objects	1	IP10	IP11	IP12	IP13	–	–	–	–	–
	2	IP20	IP21	IP22	IP23	–	–	–	–	–
	3	IP30	IP31	IP32	IP33	IP34	–	–	–	–
	4	IP40	IP41	IP42	IP43	IP44	–	–	–	–
	5	IP50	IP51	–	–	IP54	IP55	IP56	–	–
	6	IP60	–	–	–	–	IP65	IP66	IP67	IP68

N o t e s : 1. Electrical equipment having enclosure IP00 is termed open.
2. Electrical equipment having enclosures IP60, IP65, IP66, IP67 and IP68 is termed airtight.
3. The table contains preferrable protection degrees established by standards.
4. If the degree for one of the types of protection is of no importance, one of the numerals in the designation is replaced with symbol X.

APPENDIX 10

TEST PROBE

Tolerances
For angles ..... ±5'
For linear dimensions:

≤ 25 ±0,05 mm
>25 ±0,2 mm

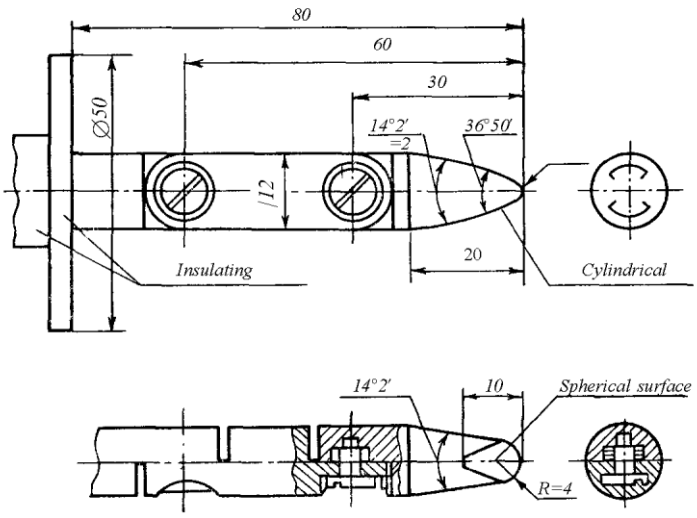

APPENDIX 11

PERMISSIBLE DEVIATIONS OF PARAMETERS IN MECHANICAL AND ENVIRONMENTAL TESTS

Parameter	Permissible deviation
Vibration frequency:	
≤ 50	±2Hz
>50	±3 per cent
Amplitude	±20 per cent
Acceleration under vibration	±20 per cent
Acceleration under shocks	±20 per cent
Temperature	±2 °C
Relative humidity	±3 per cent

APPENDIX 12 (Reference)

ENVIRONMENTAL VERSIONS OF PRODUCTS ALLOWED FOR USE IN SEA-GOING SHIPS

Version	Designations[1]	
For ships designed for service in macroclimatic areas with boreal maritime climate[2]	M	M
For ships designed for service only in macroclimatic areas with tropical maritime climate[3]	TM	MT
For ocean-going ships	OM	MU
For all macroclimatic areas on land and at sea	B	B

[1] Designations: Russian letters are for Russia, the Latin ones are for some European countries.
[2] These areas include seas and oceans located north of latitude 30°N and south of latitude 30°S.
[3] These areas include seas and oceans located between latitude 30°N and latitude 30°S.

APPENDIX 13

RUSSIA-ADOPTED DESIGNATIONS OF PRODUCTS BY CLIMATIC CATEGORIES OF LOCATION AND ARRANGEMENT OF THESE PRODUCTS IN SHIPS (GIVEN ONLY THE FIRST KEY NUMERALS OF DESIGNATIONS)

Location category	Arrangement of electrical equipment
1	On open decks
2	In spaces where air temperature and humidity variations are unessentially different from those outdoors and access of outside air is available (e.g. in metallic spaces of superstructures and deckhouses having no thermal insulation, in spaces under the bulkhead deck having no thermal insulation and other spaces below); on open decks, but in areas beyond the reach of the direct exposure to solar radiation, atmospheric precipitation and seawater pouring or splashing; in enclosures of products having location category 1
3	In spaces having thermal insulation and natural ventilation without artificially regulated environmental conditions or with prolonged breaks in regulation, wherein air temperature and humidity variations, wind and atmospheric precipitation effect are essentially less than outdoors, dew and the direct exposure to solar radiation are lacking
4	In spaces with artificially-regulated environmental conditions (heating, ventilation) including full or partial air-conditioning
5	In spaces with increased humidity (particularly wet) wherein the long-time presence of water or frequent condensation of moisture on bulkheads and deckheads is feasible

APPENDIX 14

TEST OF ELECTRICAL INSULATING MATERIALS FOR INFLAMMABILITY

1. General instructions.

The flammability test applies to solid insulating materials used as holders of current-carrying parts or sheaths of electrical and electronic devices.

This test procedure is inapplicable to insulating enclosures and jackets of cables and coductors.

2. Test samples.

Sample dimensions: length – 200 mm, width – 35 mm, thickness – 3±1,5 mm.

If the test is carried out on samples having other dimensions, a test technique shall be agreed with the Register.

If samples are made of material over 4,5 mm thick, the test is performed on the sample side with an intact extruded enclosure.

Prior to testing, the sample shall be normalized at the relative humidity of air 65±3 per cent and a temperature of 20±2 °C.

3. Test unit.

The test unit includes a filament loop and a mobile holder of the sample fitted with a scale for determination of a flame height and with a movable load for adjusting a compression pressure.

To make the loop, the filament of chrome-nickel and iron-chromium-aluminium alloys shall be used.

The configuration and dimensions of the filament loop shall be consistent with Fig. 1.

The mobile holder of the sample shall be arranged so that the latter is retained against the filament loop at a right angle (refer to Figs. 2 and 3).

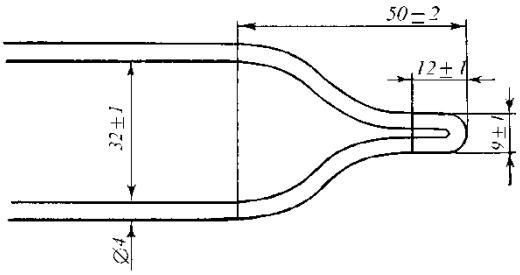

Fig. 1
Filament loop

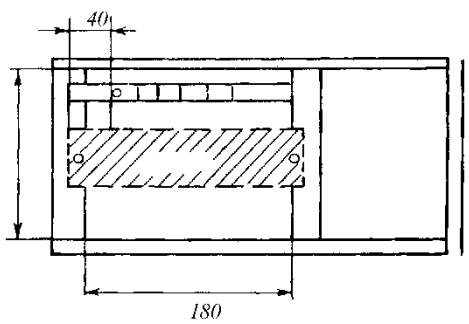

Fig. 3
Sample holder with a scale

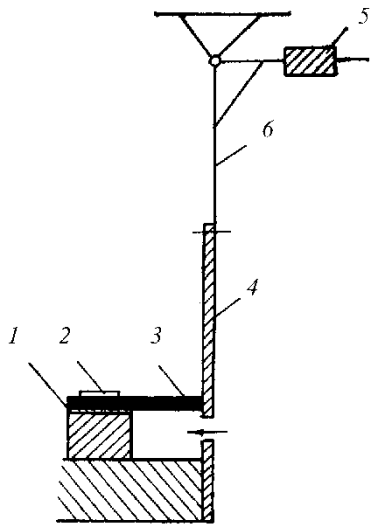

Fig. 2
Diagram of a test unit
1 – input lead; *2* – holder with clamps;
3 – filament loop *4* – sample; *5* – mass;
6 – frame with a sample holder

4. Test performance.

The filament loop is electrically heated up to the temperature corresponding to test parameters. This temperature shall be maintained at continuous power supply during at least 120 s prior to the test start.

The holder with the sample is pressed against the filament loop with a force of 1 N during the set time. If insulating material therewith ignites, the flame height by the scale and burnout duration are determined. In this case, the time period from sample removal away from the loop till flame dying down shall be recorded.

5. Test conditions.

The parameters of insulating material tests are given in the Table.

6. Estimation of test results.

6.1 Insulating materials not ignited if loaded according to test group I or ignited, but have the burning duration within 30 s irrespective of a flame height, are considered flame-retardant and suitable for sheaths, but not for holders of current-carrying parts.

6.2 Insulating materials not ignited if loaded according to test group II or ignited, but at a flame height not exceeding 3 cm and have the burning duration 60 s and over, are considered flame-retardant and suitable for sheaths and holders of current-carrying parts.

6.3 The tests shall be performed with three samples.

If one of the samples subject to 6.1 or 6.2 cannot be classed with the flame-retardant ones, three new samples shall be tested.

An insulating material may be considered flame-retardant only when all the samples subject to 6.1 or 6.2 may be classed with the flame-retardant ones in the second test.

If more than one sample are considered nonflame-retardant subject to 6.1 or 6.2, the insulating material is considered nonflame-retardant.

Table

Parameters	Test group	
	I	II
Temperature, in °C	650	960
Time of loop contact, in s	60	30
Compression force, in N	1	1

APPENDIX 15

REQUIREMENTS FOR TESTING OF A CARGO HOLD WATER LEVEL ALARM SYSTEM OF BULK CARRIERS AND SINGLE-HOLD CARGO SHIPS OTHER THAN BULK CARRIERS

1. A protective enclosure of bodies of detectors and other elements fitted in cargo holds, ballast tanks and dry spaces shall meet the IP68 requirements in accordance with IEC 60529.

2. The testing of detector/cable box bodies by water pressure shall be based on a pressure head. For detectors/cable boxes to be fitted in holds intended for the carriage of water ballast or in ballast tanks, the application head shall be the hold or tank depth and the hold period shall be 20 days. For detectors/cable boxes to be fitted in spaces intended to be dry, the application head shall be the depth of the space and the hold period shall be 24 h.

3. Where a detector/cable box is fitted in a space adjacent to a cargo hold (e.g. lower stool, etc.) and the space is considered to be flooded under damage stability calculations, the detector/cable box shall meet the IP68 requirements for a water head equal to the hold depth for a period of 20 days or 24 h whether or not the cargo hold is intended to be used as a ballast tank as specified above.

4. The functioning of the detector assembly with filtration arrangements shall be verified in the cargo/ water mixture with immersion repeated 10 times without cleaning any filtration arrangements.

5. For test purposes, an agitated suspension of representative fine materials in seawater with a concentration of 50 per cent by weight shall be used.

6. The test container for the cargo/water mixture shall be dimensioned so that its height and volume are such that the sensor and filtration arrangements can be totally submerged repeated 10 times and tested by static and dynamic inclinations.

7. The sensor and filtration arrangements fitted, that shall be submerged, and arranged in the container as they would be installed in accordance with the installation instructions.

8. The pressure in the container for testing the complete detector shall be not more than 0,2 bar at the sensor and filtration arrangement. The pressure may be realised by pressurization or by using a container of sufficient height.

9. The cargo/water mixture is pumped into the test container and suitable agitation of the mixture is provided to keep the solids in suspension:

.1 The pumping of the cargo/water mixture into the test container shall not affect the functioning of the sensor and filter arrangements;

.2 The cargo/water mixture is pumped into the test container to a predetermined level that submerges the detector and the operation of the alarm is observed;

.3 The test container is then drained and the de-activation of the alarm condition is observed;

.4 The test container and sensor with the filter arrangement shall be allowed to dry without physical intervention.

The satisafactory alarm activation and de-activation at each of the ten consecutive tests demonstrate satisfactory testing.

10. The cargo/water mixture used for type testing shall be representative of the range of cargoes within the following groups and shall include the cargo with the smallest particles expected to be found from a typical representative sample:

.1 iron ore particles and seawater;
.2 coal particles and seawater;
.3 grain particles and seawater;
.4 aggregate (sand) particles and seawater.

11. The smallest and largest particle size together with the density of the dry mixture shall be ascertained and recorded. The particles shall be evenly distributed throughout the mixture. In general, testing with representative particles qualify all types of cargoes within the four groupings shown above.

12. The following provides guidance on the selection of particles for testing purposes:

.1 iron ore particles shall mainly consist of small loose screenings of iron ore and not lumps of ore (dust with particle size < 0,1 mm);

.2 coal particles shall mainly consist of small loose screenings of coal and not lumps of coal (dust with particle size < 0,1 mm);

.3 grain particles shall mainly consist of small loose grains of free flowing grain (grain having a size > 3 mm, such as wheat);

.4 aggregate particles shall mainly consist of small loose grains of free flowing sand and without lumps (dust with particle size < 0,1 mm).

APPENDIX 16 (RECOMMENDED)

REQUIREMENTS FOR DESIGN SIMULATION OF MECHANICAL TESTS

1. DEVELOPMENT OF REM DESIGN MODELS

1.1 General

1.1.1 Prior to carrying out calculations simulating the REM mechanical tests, calculations which confirm the strength of structural components under all design loads shall be performed for all REM assemblies and structural members.

1.1.2 The design documentation in a scope providing for development of the design model with basic dynamic characteristics of the structure is used for development of the REM computer-based model and calculations.

1.1.3 Main inputs to develop the REM computer-based model include the following:

weight of REM components;

center of gravity position of REM and individual parts;

assembly drawing of REM and drawings of basic components (rotor, bearing assemblies, frame with stator, fasteners as well as other components to be taken into account in the design model (for example, attached equipment);

types of bearings and their dynamic characteristics (stiffness and damping factors), operative bearing loads;

mechanical properties of materials of REM components.

1.1.4 Available data based on tests of REM structure or its components (damping constant, frequencies and stiffness of individual structural members) may be used for verification of REM computer-based model or its individual components.

1.1.5 In addition to the above mentioned, the analysis of the following data obtained during design operating load calculations is recommended at the REM design model development stage for computeraided simulation of mechanical tests:

stresses and deformations in the most loaded areas for various combinations of operating loads which determine the possible defective areas to be considered during development of the design model;

assessment of fatigue safety factors.

1.1.6 When developing the design model, special attention shall be paid to the simulation of the following structural components of REM:

bearing shields, stator components, shaft, etc;

connection points of structural assemblies and parts (welds, bolts, etc);

mounting and securing assemblies (bearings).

1.1.7 For calculation of stress-strain state of structures, finite element analysis programs allowing for solving both linear and non-linear problems are used. These programs shall have necessary library of finite elements and be capable of automatically dividing the structures into finite elements.

Pursuant to 3.9, Part II "Technical Documentation" of the RS Rules, computer-aided calculations shall be performed in programs type-approved by the Register.

1.1.8 When simulating all types of mechanical tests, REM with shock-absorbers shall be calculated with regard to vibration isolation system parameters including total weight of the machine unit.

1.1.9 For inputs and parameters to be used for design model verification, refer to Annex 1.

1.1.10 Regulations recommended for subdivision of the model into subsystems and selection of individual structures are given in Annex 2.

1.2 Recommendations for simulation of REM structural components

1.2.1 Recommendations for simulation of the rotor supporting assembly in the design model according to the bearing assembly design are given in Annex 3.

1.2.2 The REM rotor normally has two supports, one is fixed and the other is movable which provides for rotor expansion in operating modes.

Rotor in REM designs may be supported by rolling or sliding bearings.

The stiffness of the rotor bearings is characterized by deformations of bearing components under load. These deformations are normally negligible and are not taken into account for engineering calculations. However, in some cases such as resonance, bearing stiffness may be a critical factor of the system response to the specified mechanical action.

1.2.3 Stiffness and damping characteristics of bearings may be determined by separate calculations with the use of custom-made software or based on engineering procedures described in references.

In some cases, the manufacturer may submit experimental bearing characteristics.

1.2.4 For vibration and shock strength calculations, bearing stiffness is determined for REM in the off- condition where the structural rigidity of bearing components is taken into account only.

For the procedure of engineering calculation of rolling bearing stiffness, refer to Annex 4.

1.2.5 When developing REM dynamic models, natural frequencies of the rotor depend on stiffness of the bearing assembly (Ks) which is based on the ratio of stiffness of the bearing (Kp) to that of bearing structural components (Ko) including frame components to which the bearing shield is secured. Figure *1.2-5* shows a plot of bearing assembly stiffness against Kp/Ko. As seen from the diagram, for $Kp/Ko > 10$ Ks is almost equal to Ko.

Therefore, for engineering calculations, when $Kp/Ko > 10$, bearing stiffness may be omitted.

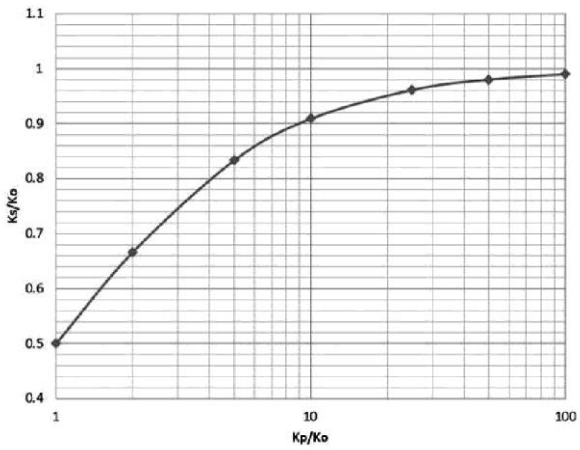

Fig. 1.2.5
Relation between bearing stiffness and support

1.3 Recommendations for setting damping on REM structures

1.3.1 Damping in the REM structure is set in accordance with GOST 17516.1-90 and GOST 30546.1-98.

1.3.2 Damping constants for welded and bolted structures depending on stress in components under dynamic actions are given in Table 1.3.2.

1.3.3 Damping constants for individual REM structural components (rolling bearings, threaded elements, joints) that may be included in the REM design model during computed-aided simulation are given in Annex 4.

Table 1.3.2

Damping constant in structures

Structure	Stress, proportion of yield strength		
	$0{,}25\sigma_T$	$0{,}5\sigma_T$	$1{,}0\sigma_T$
Welded steel structures	0,01	0,02	0,04
Bolted steel structures	0,01	0,04	0,07
Assemblies	0,01	0,02	0,07
Cabinets, panels	0,01	0,02	0,05

1.3.4 Rayleigh damping is commonly used for dynamic analysis of structures. The form of dissipation matrix for such a damping is as follows:

$$[C] = \alpha[M] + \beta[K], \qquad (1.3.4)$$

where $[M]$ and $[X]$ – system weight and stiffness matrices, respectively;
α and β – coefficients required to set a damping in the system for a given frequency band.

Recommended values of α and β for various frequency subbands and damping level specified during computer-aided simulation in the REM design model are given in Annex 5.

1.3.5 Where damping constants may be specified based on experimental data, damping parameters based on experiments shall be specified for computer-aided simulation of mechanical tests.

2. DESIGN LOADS FOR MECHANICAL TEST SIMULATION

2.1 General

2.1.1 The following tests are considered for computer-aided simulation of REM mechanical tests:

.1 for detection of resonance frequencies;
.2 vibration strength;
.3 vibration resistance;
.4 shock strength;
.5 shock resistance.

2.1.2 The following REM component load categories shall be taken into account during calculations:

.1 category A: permanent static loads due to gross gravity of the structure and installed equipment and components;

.2 category B: operating loads to be taken into account during REM mechanical tests in accordance with the RS rules (refer to 2.1.3);

.3 category C: vibration loads specified according to the RS rules during vibration strength (C_1) and vibration resistance (C_2) tests with regard to results of calculations on detection of resonance frequencies;

.4 category E: dynamic/shock loads specified according to the RS rules during shock strength (E_1) and shock resistance (E_2) tests with regard to the first resonance frequency.

2.1.3 During calculations, the REM operating state is determined by loads acting on structural components in operation. The following loads are included for REM during computer-aided simulation of mechanical tests:

.1 nominal shaft torque;
.2 shaft loads due to attached equipment;
.3 oriented offset magnetic force;
.4 force due to unbalanced rotor.

2.1.4 Vibration and shock loads are applied to each of three mutually perpendicular directions.

2.1.5 The scope of calculations shall be determined on case-by-case basis according to dynamic characteristics of REM structure with regard to requirements and recommendations of the RS Rules.

2.1.6 The scope of options for dynamic calculations and load combinations are given in Table 2.1.6.

Table 2.1.6

Combination of load categories for REM mechanical test simulation

Para of the RS Rules, tests	Load parameters	Combination of load categories	Test condition
10.5.3.2, vibration strength	Table 2.3.1	A + C1	Within all subands where a resonance is detected, or at 30 Hz in the absence of resonance
10.5.3.2, vibration resistance	Table 2.4.2	A+ B + C2	At each resonance frequency or at 30 Hz in the absence of resonance for 2 hours
10.5.3.3, Shock strength	Table 2.5.1	A + E1	At least 1000 shocks Frequency: 80 shocks/min
10.5.3.3, Shock resistance	Table 2.5.1	A + B + E2	At least 20 shocks Frequency: 80 shocks/min

2.1.7 In case of REM linear model, calculation for vibration mechanical loads is performed using harmonic analysis.

2.1.8 For non-linear calculation where non-linear characteristics of structural components (bearings, shock-absorbers, dampers, etc) are considered in the model, the variation of the amplitude of action with time is recorded.

2.2 Calculation of REM natural frequencies

2.2.1 Natural frequencies of the structure shall be calculated to determine resonance frequencies.

2.2.2 REM natural frequencies are calculated within the frequency band from 2 to 100 Hz. In order to solve this task, the RS approved software systems for calculation of stress-strain state of structure shall be capable of performing a modal analysis, i.e analysis of natural frequencies and vibration modes of structures.

2.2.3 Calculations on detection of resonance frequencies of REM to be installed on shock-absorbers are performed in two stages:

Stage 1: detection of resonance frequencies for hard-mounted REM;

Stage 2: detection of resonance frequencies of the machine unit consisting of REM installed on shock-absorbers.

2.2.4 Resonance frequencies shall be recorded both for REM and for individual assemblies/parts to be considered in further calculations for mechanical actions.

The resonance is assumed to occur in all cases when the natural frequency of the structure/component is within the specified frequency band from 2 to 100 Hz. Unless condition of 10.5.2.11 of the RS Rules is complied, the natural frequency is not considered as a resonance one.

2.2.5 The scope of further calculations on REM computer-aided simulation of mechanical tests is based on results of calculation of REM structure natural frequencies.

2.3 Design vibration strength parameters

2.3.1 Vibration characteristics (displacement amplitudes and accelerations) specified during vibration strength test simulation are given in Table 2.3.1, where A is a vibration amplitude within the subband; f_1 and f_2 are start and end frequencies of the subband, respectively.

Table 2.3.1

Vibration strength test parameters

Frequency subband, in Hz		Parameters			
		Amplitude, in mm	Accelerations, in g		Duration, in h
f_1	f_2	*A*			
2	8	1,4	0,02	0,36	450
8	16	0,7	0,18	0,72	220
16	31,5[1)]	0,35	0,36	1,4	110
31.5	63	0,2	0,8	3,2	55
63	80	0,12	1,8	3,1	25
[1)] para 10.5.3.3– in the absence of the resonances, tests shall be carried out at frequency of 30 Hz.					

2.3.2 According to 10.5.3.3. of the RS Rules, the following requirements shall be met for vibration strength tests:

.1 an amplitude shall be maintained constant;

.2 the continuous variation of frequency shall be carried out for at least 1 min;

Considering these requirements, the vibration amplitude at each subband may be specified using the following dependency:

$$A(t) = A\sin\left\{\frac{2\pi f_1 T_r[K_f(t)-1]}{\ln f_2/f_1}\right\} \qquad (2.3.2\text{-}1)$$

where T_r = 60 s – time of continuous frequency variation within a subband;
$K_f(t)$ – coefficient of frequency variation rate within a subband,

$$K_f(t) = (f_2/f_1)^{t/T_r} \qquad (2.3.2\text{-}2)$$

2.4 Design vibration resistance parameters

2.4.1 According to 10.5.3.4.4 of the RS Rules, the following requirements shall be met for vibration resistance tests:

.1 the tests shall be carried out through continuous variation of the frequency while maintaining a constant amplitude within each subband;

.2 the continuous variation of frequency within each subband shall be carried out for at least 2 min.

During computer-aided simulation of mechanical tests, these conditions may be analyzed based on vibration strength calculation results with regard to vibration amplitude ratio.

The vibration resistance check shall be carried out according to Table 10.5.3.4.3 of the RS Rules only at each resonance frequency (if any) at exposure duration of 2 h.

2.4.2 Vibration characteristics (displacement amplitudes and accelerations) specified for vibration resistance test simulation are given in Table 2.4.2, where *A*, f_1 and f_2 (refer to Table 2.4.2) f_r – resonance frequency in Hz.

Table 2.4.2

Vibration resistance test parameters

Frequency subband in Hz		Parameters			
		Amplitude in mm	Accelerations in g	Time in h	Number of cycles
f_1	f_2	*A*			
2	8	1,0	$A(2pf_r)^2$	2	7200 f_r, where f_r – resonance frequency in Hz
8	16	0,5			
16	31,5	0,25			
31,5	63	0,15			
63	80	0,1			
f = 30 Hz in the absence		0,25	0,905	2	$2{,}16 \times 10^5$

2.5 Design shock load parameters

2.5.1 Shock characteristics (duration of impact momentum, number of impacts and acceleration) specified for shock strength and resistance test simulation are given in Table 2.5.1.

The duration of impact momentum is specified according to the lowest natural frequency of a product (REM).

Table 2.5.1

Shock load test parameters

Value of the lowest resonance frequency in Hz	Duration of shock momentum in ms	Tests	
		Shock strength	Shock resistance
Up to 60	18	334 shocks in each direction Acceleration: 7g	7 shocks in each direction Acceleration: 5g
60 to 100	11		
100 to 200	6		
200 to 500	3		

2.5.2 The acceleration of the shock momentrum with regard to the value of the lowest resonance frequency may be specified using the following dependency:

$$Ia(t) = Ia\sin\left(\pi\frac{t}{\tau}\right), \qquad (2.5.2)$$

where t – duration of the shock momentum in s.

Plots of shock momenta for vibration strength simulation with regard to the value of the lowest resonance frequency are given in Fig. 2.5.2.

For vibration resistance calculation, the shock load is scaled to be normalized to the maximum acceleration of 5g.

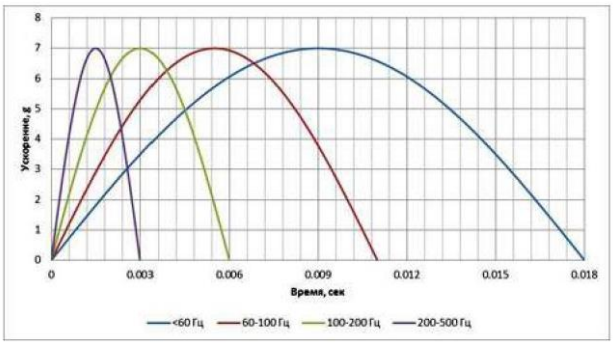

Fig. 2.5.2
Shock momenta for vibration strength tests

3. STRENGTH ASSESSMENT OF REM STRUCTURAL COMPONENTS

3.1 General requirements to calculations

3.1.1 The REM structure shall provide the required load-bearing capacity of all components designed to take up loads simulating mechanical actions to which REM shall be subjected in accordance with the RS Rules.

3.1.2 The load-bearing capacity of structural components shall be assessed by the following allowable values:

displacements;
stresses;
fatigue safety factors;
cumulative damage safety factors;
durability safety factors.

3.1.3 During mechanical test computer-aided simulation with regard to the RS Rules, the operation of the REM structure is considered under multi-cycle fatigue loading conditions.

3.1.4 For assessment of fatigue strength of REM structural components during mechanical test simulation, the specific features of REM structure, fabrication techniques and operating conditions shall be taken into account.

3.1.5 The software systems licensed and certified according to the established procedure and that allow for calculation of basic dynamic characteristics of REM through computer-aided simulation with concurrent calculation of accelerations and displacements of arbitrary points of any structure model components, dynamic factors, bearing loads, safety factors shall be used for calculations.

According to 3.9, Part II "Technical Documentation" of the RS Rules, computer-aided calculations shall be performed in programs type-approved by the Register.

3.1.6 For simulation of REM mechanical tests, structural components (stator, rotor, attached structures) as well as load-bearing structures of controls shall be designed for strength under the action of combination of loads specified in Table 2.1.6.

3.1.7 The stress-strain state of REM structural components (stator, bearing shields, load-bearing structures of controls, fasteners) is assessed in the specified test conditions.

3.1.8 Fatigue resistance shall be assessed at stresses that vary symmetrically or normalized to the symmetrical cycle as follows:

.1 by stress safety factor n_σ in relation to the part endurance limit, if the number of loading cycles of a structural component N in the course of test simulation is more or equal to the basic value $N_G = 2 \times 10^6$ corresponding to the break of the fatigue curve;

.2 by endurance safety factor n_d in relation to the restricted part endurance limit, if the number of loading cycles during mechanical test simulation is less than basic value *NG*;

.3 by cumulative damage a at limited/specified endurance.

3.1.9 Endurance limits shall be calculated based on fatigue tests of full-scale parts or based on endurance limits of appropriate materials σ_{-1} with regard to stress concentration in the part.

Annex 6 covers recommendations for calculation of mechanical properties of some materials used in REM structures.

3.1.10 While assessing fatigue strength, two typical stress variation cases shall be considered:

.1 regular cyclic loading where the amplitude of time-varying stresses may be taken constant (σ_a = const) which is divided into calculation within large and limited endurance region;

.2 irregular/unsteady cyclic loading occurs in machine parts under loads with variable parameters.

3.1.11 Calculations within large endurance region for stresses below the physical endurance limit are carried out using stress safety factor only since in such a case the number of cycles to failure can not be calculated.

The calculation within large endurance region may be performed for estimation of REM component fatigue strength in the following cases:

.1 for preliminary/conservative assessment of structural component fatigue strength;

.2 for vibration strength calculation in the absence of resonance;

.3 for vibration resistance calculation.

3.1.12 Only endurance safety factor is normally determined for calculation within the restricted endurance region since setting limits for stress/load safety factors does not always suffice.

3.1.13 In case of resonance where stresses in the REM structural component exceed the endurance limit, the vibration strength assessment is limited to the calculation for regular cyclic loading at a resonance frequency for relatively small number of loading cycles (Table 2.4.2).

3.1.14 Shock loads to be calculated for REM during mechanical test simulation have large acceleration and much less number of loading cycles as compared to vibration resistance calculation (Table 2.5.1). It should be noted that in case of shock loads vibrations are damping at natural frequency.

3.1.15 In view of the aforesaid, REM structural components are assessed within the limited endurance region in the following cases:

.1 for vibration strength calculation in case of resonance;

.2 for shock loads calculation.

3.1.16 The organization engaged in calculation is in charge of selection of any method for assessment of REM component load-bearing capacity during computed aided simulation of mechanical actions.

3.2 Strength assessment of REM structural components

3.2.1 Stress safety factor nσ shall be calculated by the following formula:

$$n_\sigma = \frac{\sigma_{-1}}{K\sigma_a + \psi\sigma_m} \geq 1{,}5, \qquad (3.2.1)$$

where σ_{-1} = endurance limit of a standard specimen in case of symmetrical loading cycle;
σ_a = cycle stress amplitude;
ψ = factor of metal sensitivity to the cycle symmetry;
σ_m = mean cycle stress.

3.2.2 Fatigue limit conversion factors *K* are introduced to account for structure size factors (scaling effect), stress gradients in the vicinity of the hazardous point (stress concentration), availability and value of residual stresses in the vicinity of the hazardous point, surface finish in the area of the hazardous point, operating conditions of the structural components during assessment of fatigue damages.

3.2.3 In engineering practice, coefficient *K* is determined by the following relationships: tension/compression or bending:

$$K = \frac{K_\sigma/K_{d\sigma} + 1/K_{F\sigma} - 1}{K_v} \qquad (3.2.3\text{-}1)$$

torsional shear:

$$K = \frac{K_\tau/K_{d\tau}+1/K_{F\tau}-1}{K_\nu} \qquad (3.2.3\text{-}2)$$

where $K_{\sigma(\tau)}$ = effective stress concentration factor (ratio of endurance limit of a smooth specimen to that of a specimen with the stress concentrator) calculated by the following formula:

$$K_{\sigma(\tau)} = 1 + q(\alpha_{\sigma(\tau)} - 1), \qquad (3.2.3\text{-}3)$$

where $\alpha_{\sigma(T)}$ = theoretical stress concentration factor based on reference data;
q = relative notch sensitivity factor;
$K_{d\sigma}, K_{d\tau}$ = cross-section absolute size factor or scaling factor (ratio of endurance limit of a specimen with the specified diameter to that of a specimen with a standard diameter) based on nomograms;
$K_{F\sigma}, K_{F\tau}$ = surface finish factor (ratio of endurance limit of a specimen with the surface finish concerned to that of a specimen based on which the fatigue curve was obtained) based on nomograms;
K_ν = surface hardening factor (ratio of endurance limit of a specimen with the surface finish concerned to that of a nonhardened specimen) is based on reference data.

3.2.4 Recommendations for determination of stress concentration factors for different parts are given in reference documents (for example, GOST 25.504-82 – Strength calculation and testing. Methods of fatigue strength behaviour calculation).

3.2.5 Factor q may be taken as follows:

.1 q = 0,7 for mild steels St3;

.2 q = 1 for low alloy steels.

3.2.6 For assessment of assembly strength based on cycle stress maximum amplitudes (i.e in the stress concentration zone) $K_{\sigma(T)}$ is taken equal to 1.

Where a stress concentrator is simulated in the finite-element (FE) model, $\alpha_{\sigma(T)}$ may be determined directly from numerical analysis, in such a case $K_{\sigma(T)}$ = 1 may be taken equal to 1, and peak stresses in FE model may be taken as σ_a, σ_m.

Stresses from category A loads are taken as the mean cycle stress σm for vibration and shock strength calculations, and combination of category A and B loads – for vibration and shock resistance calculations.

3.2.7 Absolute size factor Kd is taken equal:

.1 K_d = 1,0 for specimens 10 mm in diameter;

.2 K_d = 0,76 to 0,60 for part up to 100 mm in size;

.3 for calculations of large-sized parts with sizes exceeding 100 mm, the following empirical relationship is recommended:

$$K_d = K_\infty + (1 - K_\infty)e^{-\lambda d}, \qquad (3.2.7)$$

where K_∞ = 0,4 for molded parts;
K_∞ = 0,5 for parts fabricated by deformation;
λ = 0,01 to 0,03 l/mm;
d – typical size of the part in mm.

3.2.8 Steel part surface condition factor, K_F may be calculated by the following relationships: at bending:

$$K_{F_\sigma} = 1 - 0{,}22\lg R_z(\lg 0{,}05\sigma_B - 1) \quad \text{at } R_z > 1 \text{ мкм}$$

1 at $R_z \leq$ 1 мкм (3.2.8-1)

at torsional buckling:

$$K_{F_\tau} = 0{,}675 K_{F_\sigma} + 0{,}425, \quad (3.2.8\text{-}2)$$

where R_z – roughness factor, μm

3.2.9 Cycle asymmetry sensitivity factor ψ is calculated by the following formula:

$$\psi_\sigma = \frac{2\sigma_{-1} - \sigma}{\sigma_0} \quad (3.2.9)$$

where σ_0 – endurance limit at non-alternating loading condition.

When calculating fatigue resistance of parts of mild construction and molded steel (including welded parts) ψ_σ shall be taken as follows:

equal to 0.3 for tensile fibers (σ_m > 0);

equal to 0 for compression fibers (σ_m < 0).

Additional recommendations to determine ψ are given in Annex 6.

3.2.10 For REM calculations, surface hardening factor K_v is taken into account for assessment of rotor strength only.

Factors may be based on data given in R 50-83-88 Standard "Strength calculation and testing. Strength calculations of shafts and axles".

3.2.11 Stress safety factors due to combined action of normal and shear stresses ($n_{\sigma\tau}$) are based on safety factorsa n_σ and n_τ) in the following form:

$$n_{\sigma\tau} = \frac{n_\sigma n_\tau}{\sqrt{n_\sigma^2 + n_\tau^2}} \geq 1{,}5 \quad (3.2.11)$$

3.2.12 The following condition shall be met for evaluation of strength factors of welds:

$$n_\tau = \frac{\tau_{-1w} - \psi_\tau \tau_{mw}}{K_\tau \tau_a} > 2{,}5 \quad (3.2.12)$$

where $\tau_{-1w} = 0{,}65\sigma_{-1}$ – weld endurance limit;
$\psi_\tau = 0{,}3$ – factor of material sensitivity to the cycle asymmetry;
τ_{mw} – mean stress in a weld;
τ_a – mean stress amplitude in a weld;
K_τ – stress concentration factor (values for typical welded joints are given in Annex 7). Where a stress concentrator is simulated in the FE model, K_τ may be equal to 1.

3.2.13 For unsteady loading condition, fatigue strength shall be checked based on the hypothesis of the linear damage accumulation regarding the number of loading cycles for each testing condition.

The cumulative damage is not calculated if the condition (refer to 3.2.12) is met for all testing conditions.

3.3 Assessing endurance and cumulative damage for REM parts

3.3.1 For calculation of endurance safety factor n_∂ based on the following relationship within the limited endurance region:

$$n_\partial = \frac{N_{np}}{N_p} \geq 1{,}5 \quad (3.3.1)$$

where N_{np} – number of operating cycles to cracks based on the following relationship

$$N_{np} = N_G \left(\frac{\sigma_{-1}}{K\sigma_a + \psi\sigma_m}\right)^m = N_G n_\sigma^m, \quad (3.3.1\text{-}1)$$

m – constant depending on material properties;
N_p – number of loading cycles experienced by part during tests (for shock load calculation based on calculation).

3.3.2 For endurance assessment, the linear accumulated damage hypothesis is recommended. In general, if each *i*-th cycle in the concerned process of structure loading is repeated n_i times, a linear accumulated damage rule (Palmgren-Miner's rule) is used to describe the accumulated damage in the structure. According to this rule, a damage accumulated in a hazardous point is based on the following formula:

$$a = \sum_{i=1}^{k} \frac{n_i}{N_i} \quad (3.3.2)$$

where k – number of different stress amplitudes during loading;
n_i – number of repetitions of amplitude σa during loading,
N_i – number of cycles to failure for stress amplitude σa which is based on fatigue curve for the part concerned.

3.3.3 For vibration within the concerned frequency subbands, displacement and stress amplitude is of irregular cyclic nature as shown in Fig. 3.3.3.

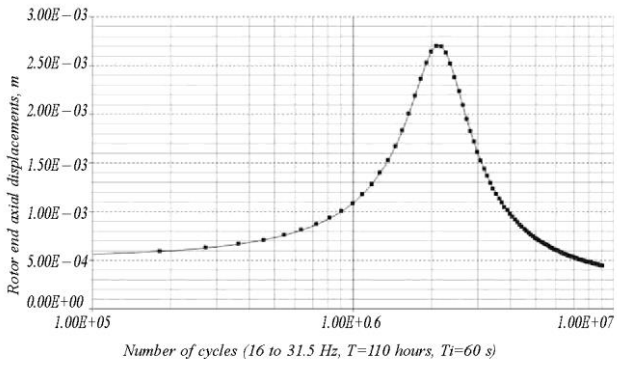

Fig. 3.3.3
Vibration amplitude variation during resonance (continuous loading)

The following data may be used for such a variation of stresses in the structural component for cumulative damage assessment:

.1 dependence between number of cycles to failure N and stress amplitude σ ($\sigma - N$ curve) as a function $N^* = N\ (\sigma)$;

.2 variation of stress with the forced vibration frequency f of the system as a function $\sigma = \sigma\ (f)$.

Then, based on linear damage accumulation assumption, the total damage at the point of interest may be determined when the system experiences vibration resonance for time-variant external vibration frequency.

Variation of frequency *f* with time *t* is based on Formula (2.3.2-2).

For power-law dependence (5.1.1), we get the following:

$$a = \int_{f_1}^{f_2} \frac{T}{N*[\sigma(f)]\ln(f_2/f_1)} df, \qquad (3.3.3)$$

where T – duration of tests within a subband according to Table 2.3.1, in s.

3.3.4 For shock calculation, individual peaks of damping vibrations of the system upon each shock act as loading categories.

Fig. 3.3.4 shows a typical plot of axial displacement of the REM rotor upon exposure to shock (pulse length t is 0.018 s). Variations for stresses in critical points of the structure are of similar form.

The analysis of shock load calculations shows that at damping constant (k = 0.07 with regard to acceleration of shock pulses) specified according to 1.3, no superposition of vibrations from two adjacent shock pulses occurs in the structure.

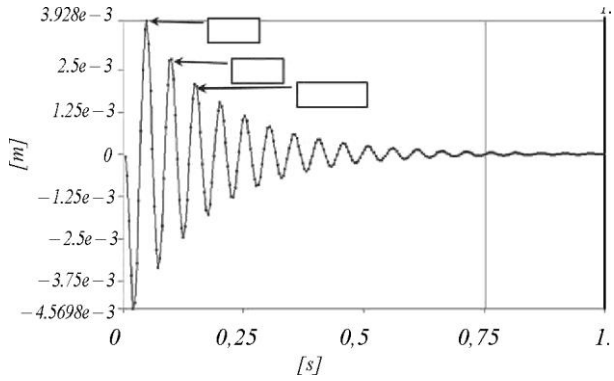

Fig. 3.3.4
Damping of rotor axial displacements upon exposure to axial shock

In view of the above, the cumulative damage estimate during damping process upon exposure to shock for each direction of exposure (refer to 2.1.4) may be calculated by the following relationship:

$$a = \frac{n}{N_G}\left(\frac{\sigma_{\max}}{\sigma_{-1}}\right)^m \frac{1}{1-e^{-2\pi km}}, \qquad (3.3.4)$$

where n – number of shocks specified in accordance with Table 2.5.1;
a_{-1}, N_G, m – material characteristics;
σ_{max} – maximum stress amplitude at shock load;
k – damping constant as a fraction of critical damping.

3.3.5 The process of REM mechanical tests may be represented as a loading block (Fig. 3.3.6) as a combination of stress amplitudes σai and their corresponding numbers of cycles vi experienced by the part at the *i*-th stress amplitude upon exposure to vibrations and shocks simulating the testing conditions.

In Fig. 3.3.6 σai means the amplitude of equivalent stresses normalized to the symmetrical cycle for the part at i = 1, 2, …, *s,* where *s* – number of steps in the loading block.

3.3.6 According to the hypothesis of the linear damage accumulation, the condition for fatigue cracking due to sequential action of various stresses included in the loading block is described by Formula (3.3.1-1).

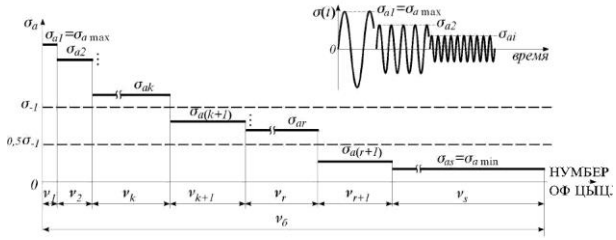

Fig. 3.3.6
Calculation diagram for irregular cyclic/stepwise loading

3.3.7 Upon inserting expression for N_i from Weller's power-law equation to Formula (3.3.1-1), we get the following condition:

$$a = \frac{1}{N_G \sigma_{-1}^m} \sum_{i=1}^{k} n_i \, \sigma_{ai}^m \leq 1 \qquad (3.3.7)$$

3.3.8 The corrected hypothesis of the linear damage accumulation allowing for increase in validity of engineering calculations is based on the following provisions:

3.3.8.1 The limiting value of relative damage sum is taken equal to a_p (rather than unit) which depends on loading cycle form:

$$a_p = \frac{\sigma_{a\max}\xi - 0{,}5\sigma_{-1}}{\sigma_{a\max} - 0{,}5\sigma_{-1}}, \qquad (3.3.8.1)$$

where

$$\xi = \sum_{i=1}^{s} \frac{\sigma_{ai}}{\sigma_{a\max}} t_i$$

$t_i = \frac{v_i}{\sum_{i=1}^{s} v_i}$ – relative running time at the i-th level of stress amplitudes.

3.3.8.2 Experiments proved that if there are stress amplitudes exceeding the endurance limit ($\sigma_{\alpha k} \geq \sigma_{-1}$) the stress levels for which $\sigma_{\alpha r} \geq 0{,}5\sigma_{-1}$ (refer to Fig. 3.3.6) are also starting to make the adverse effect.

Here, r – maximum number of stress level which exceeds the level of the block making the adverse effect ($\sigma_{ar} \geq 0{,}5\sigma_{-1}$, $\sigma_a(r+1) \leq 0{,}5\sigma_{-1}$).

3.3.9 With regard to 3.3.8.1, the condition for fatigue cracking based on corrected hypothesis of the linear damage accumulation is expressed as follows:

$$a = \frac{1}{N_G \sigma_{-1}^m} \sum_{i=1}^{r} n_i \, \sigma_{ai}^m \leq a_p, \qquad (3.3.9)$$

3.3.10 The results of damage accumulation calculations for each simulated testing condition shall be summed up. In this respect the condition shall be met.

$$\sum_{i=1}^{NI} a_I \leq 1. \qquad (3.3.10)$$

where NI – total number of mechanical tests.

4. ASSESSING THE REM ROLLING BEARINGS

4.1 According to GOST 18854-94 "Rolling Bearings. Static Load Ratings", contact stresses in the material of rings and rolling elements for different bearings may be within 4000 to 4600 MPa.

4.2 Under static loading surface damages appear as crushing of contacting surfaces. In such a case, the calculation is that effective stresses meet the following condition:

$$\sigma_{\text{H}} \leq [\sigma_{\text{H}}],$$

where $[\sigma_{\text{H}}]$ – permissible contact stresses.

The basic static load rating of the bearing (C_0) is determined based on this criterion. This rating may be calculated according to GOST 18854-94 or specified based on reference data for each bearing.

4.3 Rolling bearings are selected by C_0 if they take up the load while stationary or at slow rotation (at rotation speed of up to 10 rpm).

4.4 Considering the fact that vibration and shock strength tests for REM are performed in the off- condition, the load-bearing capacity is assessed for these conditions based on static load rating (C_0).

4.5 Static equivalent load is calculated by the following formula:

$$P_0 = X_0 F_r + Y_0 F_a, \tag{4.5}$$

where F_r, F_a – radial and axial loads;
X_0, Y_0 – radial and axial load factors.

4.6 Formulas for equivalent load and appropriate radial and axial load factors for a specific bearing are given in reference books or GOST 18854-94.

4.7 For confirmation of vibration and shock strength of rolling bearings, the following condition shall be met:

$$C_0 / P_0 > n_b, \tag{4.7}$$

where n_b – safety factor of influence of dynamic test conditions similar to influence on endurance.

For K_s values, refer to Table 4.7.

Table 4.7

Safety factor n_b of rolling bearings

Bearing load	N_b
Vibration tests	2,0
Shock tests	2,5

4.8 When simulating vibration and shock resistance tests, the REM shall operated at rated speed.

4.9 The dynamic load rating *C* that is a permanent radial/axial load which the bearing can withstand within the design lifetime of 1 mln, revolutions of internal ring is used as a parameter of load-bearing capacity of the rolling bearings during REM operation.

4.10 For assessment of rolling bearing serviceability, the rated life of the bearing is considered during tests.

The rated life of a bearing means the number of revolutions or hours (at a constant rotation speed) that the bearing shall run to the first sign of metal fatigue on a raceway of any ring or a rolling element.

The bearing life in hours is calculated by the following relationship:

$$L - \frac{a_{23} \times 10^6}{60n} \left(\frac{C}{P}\right)^p, \tag{4.10}$$

where a_{23} – overall factor of combined effects of metal quality of bearing parts and operating conditions on bearing life;
n – rotation speed in rpm;
P – equivalent dynamic load;
p – index of power:
$p = 3$ – for ball bearings;
$p = 10/3$ zfor rolling bearings.

a_{23} and C values are taken based on reference data.

4.11 Equivalent dynamic load P for specific bearings is calculated by formulas from reference books or according to GOST 18855-94.

Equivalent dynamic load is calculated by the following formula:

$$P = (XF_r + YF_a)K_t, \tag{4.11}$$

where F_r, F_a – radial and axial loads, respectively;
X, Y – radial and axial load factors;
K_t – temperature factor specified according to Table 4.11.

4.12 To account for directions of variable loads which may occur during vibration and shock resistance tests of REM, bearing life is assessed by mean radial (F_{rm}) and mean axial (F_{am}) loads. The load variation at continuous variation of frequency within each subband shall be taken into account (refer to Fig. 3.3.6).

Table 4.11

Temperature factor of bearings

Operating temperature, °C	125	150	175	200	225	250
K_t	1.05	1.1	1.15	1.25	1.35	1.4

4.13 Mean load for calculation for different conditions at a constant rotation speed is calculated by the following relationship:

$$F_m = (F_1^p q_1 + F_2^p q_2 + F_3^p q_3 + \ldots + F_n^p q_n)^{1/p} \tag{4.13}$$

where $F_1, F_2, F_3 \ldots F_n$ – load (radial or axial) taken by the bearing at each condition;
$q_1, q_2, q_3 \ldots q_n$ – fraction of each condition in the total duration of conditions.

4.14 Mean loads determined according to relationship (refer to 4.13) are used to calculate the equivalent load on the bearing and bearing life for substantiation of REM rolling bearing resistance to mechanical actions.

4.15 The rolling bearings are considered vibration resistant provided that

$$\frac{L}{2Nr} > n_b = 2{,}0 \tag{4.15}$$

where 2 – minimum time of condition for vibration resistance tests in hours;
Nr – number of vibration resistance testing conditions.

4.16 For simulation of vibration resistance tests, the design testing conditions are specified according to Table 2.5.1.

The rolling bearings are considered shock resistant provided that the following condition is met:

$$\frac{L \times 60 \times 80}{20} = 240L > n_b = 2{,}5 \qquad (4.16)$$

5. ASSESSING THE REM SLIDING BEARINGS

5.1 For vibration and shock strength tests, crushing stresses in the bearing material (for example, white metal) are assessed since tests are simulated in a non-operative condition i.e there is no lubricating oil layer.

5.1.1 Surface damages appear as crushing of contacting surfaces and the calculation is that the following condition is to be met:

$$\frac{[\sigma]}{\sigma_s} \leq n_s = 2{,}5, \qquad (5.1.1)$$

where n_s – crushing safety factor;
σ_s – crushing stress;
$[\sigma]$ – rated permissible stresses of a material (refer to Annex 6).

5.1.2 When calculating crushing stresses it is assumed that only normal stresses uniformly distributed over the contact area occur at the contact plane. The design crushing stress may be calculated by relationships given in Annex 8.

5.1.3 Where contacting parts are made of different material, a part made of softer material shall be subject to crushing test.

5.2 Conditional calculation of sliding bearings is performed for bearings operating under boundary friction conditions where rubbing surfaces are not separated by a lubricant layer, with the thin oil film on the liner working surface only which may get destructed. This calculation is performed for durability and absence of jamming.

5.3 The conditional calculation of sliding bearings is performed by mean pressure pc between journal and liner and by product of this pressure and journal peripheral sliding speed *v,* i.e by parameter pcv.

5.3.1 Calculation by mean pressure pc ensures that no lubricant will be squeezed out and is a durability calculation, while calculation by $p_c v$ ensures normal temperature conditions and absence of jamming.

5.3.2 Condition of normal serviceability of sliding bearings and thrust bearings under boundary friction:

$$p_c \leq [p_c] \qquad (5.3.2\text{-}1)$$

$$p_c v \leq [p_c v], \qquad (5.3.2\text{-}2)$$

where p_c – actual mean pressure between journal and liner/thrust heel;
v – journal peripheral speed;
$[p_c]$ – permissible pressure;
$[p_c v]$ – permissible value of criterion.

5.3.3. Table 5.3.3 shows permissible parameters of sliding bearings for different combinations of journal and bearing material.

Table 5.3.3

Permissible values of [p_c] and [$p_c v$] for sliding bearings

Journal and liner material	$[p_c]$, МПа	$[p_c v]$, МПа м/с
Steel-cast iron	22 to 4	12 to 3
Steel-bronze БрОбЦбС3	42 to 6	42 to 6
Tempered steel-bronze БрА9Ж4	152 to 20	122 to 12
Steel-bearing cast iron АЧК-1, АЧК-2 at v = 1 m/s	12	12
Ditto at v = 5 m/s	0,5	2.5
Tempered steel-white metal	62 to 10	122 to 25

5.3.4 Formulas for assessment of serviceability of sliding and thrust bearings under boundary friction conditions are given in Annex 8.

5.3.5 For additional specifications of anti-friction materials, refer to Annex 9.

5.4 Calculation of radial oil film bearings

5.4.1 Calculation of radial fluid friction bearings is based on hydrodynamic theory of lubrication. The conditional boundary separating the fluid friction condition from the semifluid friction condition is determined using Sommerfeld dimensionless numbers

$$[S_0] = p\psi^2/\mu\omega. \qquad (5.4.1)$$

where p – working pressure,
$\psi = \Delta/d = D/d - 1$ – relative diametric clearance in a bearing;
D – liner diameter;
μ – dynamic viscosity, MPa×s determined with regard to oil grade and operating temperature based on reference data;
ω – angular speed.

5.4.2 Values of [S_0] corresponding to the conditional boundary between semifluid and fluid friction are based on reference data (refer to Table 5.4.2):

Table 5.4.2

S_0 values

Relative clearance ψ	*l/d* ratio	Stud diameter, mm								
		30	40	50	60	70	80	100	150	200
0.001	0.6	0.28	0.35	0.42	0.53	0.65	0.8	1.0	2.0	3.0
	0.8	0.44	0,54	0,64	0,8	0,95	1,2	1,5	2,7	4.0
	1.0	0.58	0,72	0,85	1,0	1,2	1,5	1,9	3,3	4,5
	2.0	0.7	0,8	1,0	1,2	1,4	1,7	2,2	3,7	5,0
0.002	0.6	0,42	0,53	0,65	0,8	1,0	1,4	2,0	3,0	5,0
	0.8	0,64	0,8	0,95	1,2	1,5	1,9	2,7	4,0	6,0
	1.0	0,85	1,0	1,2	1,5	1,9	2,4	3,3	4,5	7,0
	2.0	1,0	1,2	1,4	1,7	2,2	2,6	3,7	5,0	8,0
0.003	0.6	0,65	0,8	1,0	1,4	2,0	3,0	4,0	5,0	6,0
	0.8	0,95	1,2	1,5	1,9	2,7	4,0	5,0	6,0	8,0
	1.0	1,2	1,5	1,9	2,4	3,3	4,5	6,0	7,0	9,0
	1.2	1,4	1,7	2,2	2,6	3,7	5,0	6,5	8,0	10,0

$$p\psi^2/\mu\omega < [S_0] \text{ – fluid friction,}$$

$$p\psi^2/\mu\omega > [S_0] \text{ – semifluid friction.}$$

5.4.3 The fluid friction condition is not violated provided that

$$n_b = \frac{h_{\min}}{h_{kp}} \geq 1{,}1, \qquad (5.4.3)$$

where n_b – layer clearance margin which accounts for influence of possible random factors;
$h_{\min}$ – thickness of a lubricating oil layer in the bearing in the fluid friction condition;
h_{kp} – fluid friction violation condition.

5.4.4 Formulas for assessment of serviceability conditions of sliding and thrust bearings under fluid friction conditions are given in Annex 8.

5.5 For calculations dynamic characteristics of bearings may be specified based on manufacturer's data.

Custom-made software systems (for example, CFXTASCflow for simulation of hydrodynamic and hydrostatic sliding bearings, ANSYS; Dynamics R4) may be also used.

6. REQUIREMENTS TO THREADED JOINTS

6.1 In REM structure threaded joints are used for connection of individual structural components and fastening of REM to the base.

As a rule, the following REM components are secured using threaded joints:
bearings caps to bearing shields;
bearing shields to stator structures;
attached structural components (coolers, stator walls, etc).
Threaded joints are also used for securing REM to the supporting frame.

6.2 With regard to design features of REM threaded joints, they may be divided into two types:
flanged joints (for securing caps to bearing shields);
plate-base group joints (for securing stator to the base).

6.3 The structure shifting shall be avoided at the joint plane for both types of joints, i.e the tightening force shall comply with joint performance by this criterion.

6.4 The main performance criteria for threaded joints are static strength and durability of bolts (screws, studs) i.e. their resistance to failure under single and cyclic loads.

The joint failure under a single load occurs due to breakage of bolt shank, its head or truncation of thread turns. Bolt fatigue failures occur on the most loaded working thread turns, under its head or over the thread runout and determine the durability/life of the joint.

Under loads at joint plane, the bolt shank may be subject to shear fracture.

6.5 Threaded joint performance also depends on tightness of joints under variable loads that are provided by pretension. Both over- and undertightening may result in failure of threaded parts.

As a rule, bolts of the same type and size are used in the REM joint elements. Specifications provide for tightening with the same torque to prevent redistribution of forces in bolts and on joints.

6.6 Joint non-opening condition is expressed as follows:

$$Q_o > (1 - \chi)N, \qquad (6.6)$$

where Q_o – bolt tightening force;
χ – main load factor ($\chi = 0.2$) showing that in the tightened threaded joint, the external load is partially transferred to a bolt.

6.7 In case of cyclic variation in the external load (from minus N to N), stress amplitude in the threaded portion of a bolt was calculated by the following formula:

$$\sigma_a = \frac{N}{A_b}\chi \tag{6.7}$$

where A_b – area of the threaded portion of a bolt;

6.8 Endurance limit for a joint was determined by the following relationship:

$$\sigma_{ad} = \frac{\sigma_{-1}}{k_\sigma}\beta_{K.Y\Pi}\beta_{T.Y\Pi}K_d \tag{6.8-1}$$

where σ_{-1} – endurance limit for symmetric cycle,
k_σ – effective stress concentration factor,

$$k_s = 1 + q(\alpha_\sigma - 1), \tag{6.8-2}$$

where q – relative notch sensitivity factor;
α_σ – theoretical stress concentration factor,

$$\alpha_\sigma = 1 + 1{,}1\sqrt{p/r}, \tag{6.8-3}$$

p – thread pitch, mm;
r – thread root fillet radius, mm $r = 0.108p$;
$\beta_{K.Y\Pi}$ – structural hardening factor;
$\beta_{T.Y\Pi}$ – process hardening factor;
K_d – scaling effect factor.

6.9 For simulation of REM mechanical tests, the permissible value of strength factor n_a is equal to 1.5.

6.10 Variable stress strength factor of a threaded joint is calculated by formulas according to pretension stress σ_0.

For tension stress of bolts

$$\sigma_0 = \frac{Q_0}{A_b} < 0.5\sigma_T \tag{6.10}$$

6.11 Safety factor is calculated by the following relationship:

$$n_a = \frac{\sigma_{ad}}{\sigma_a}\left(1 - \frac{\sigma_m}{\sigma_T}\right)\frac{1}{1-0{,}5\sigma_T/\sigma_B} > [n_a] \tag{6.11}$$

where σ_m – mean cycle stress,

$$\sigma_m = \sigma_0 + \sigma_a.$$

6.12 For unsteady loading condition, fatigue strength shall be checked based on the hypothesis of the linear damage accumulation regarding the number of loading cycles for each testing condition.

The cumulative damage is not calculated if the condition (refer to 6.5) is met for all testing conditions.

6.13 The calculation procedure for threaded joints is described in detail in R 50 54-90-88 Standard which contains general requirements to strength calculations of threaded joints for different loading conditions and types.

7. ASSESSMENT OF REM VIBRATION ISOLATION SYSTEM COMPONENTS

7.1 General provisions on simulation of REM securing conditions

7.1.1 According to the type of a flexible element, spring and rubber vibration isolators are most commonly used. By damping type, vibration isolators may be divided into systems with internal damping in a flexible material, systems with frictional and structural damping.

7.1.2 When assessing shock-absorber system operation, check the following performance parameters: total loading capacity of all vibration isolators;

center of gravity coordinates of vibration isolating structure and shear centers of vibration isolation system that shall (ideally) coincide for all possible directions of actions (to prevent skewness);

stiffness and damping characteristics of vibration isolation system components;

partial resonance frequencies of vibration isolation system;

performance criteria for vibration isolation system components (permissible loads, displacements, etc).

7.1.3 In practice, REM are included in machine units containing the equipment and supporting frame. For the machine unit mounted on a frame with vibration isolators, refer to Fig. 7.1.3.

The above mentioned parameters shall be given as inputs to be further accounted for during development of the computer-based model for the machine unit.

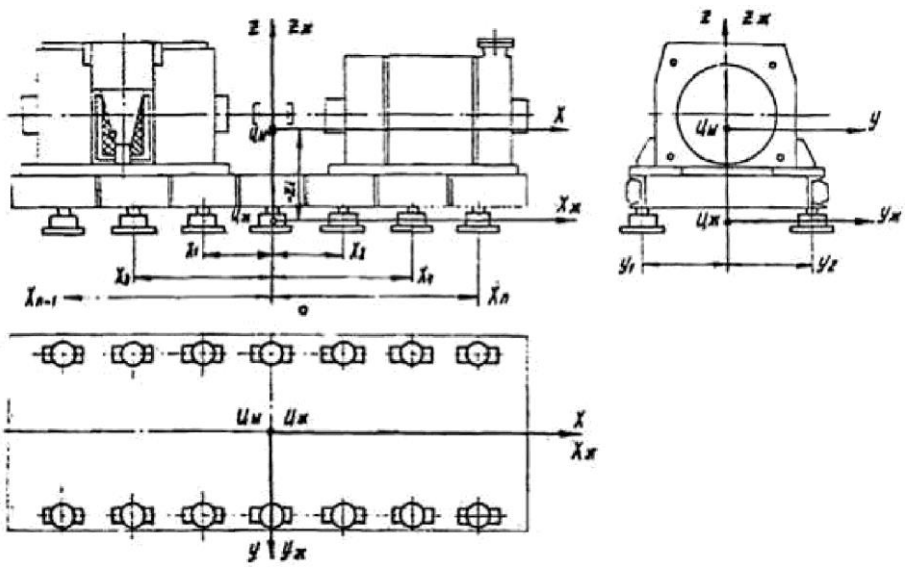

Fig. 7.1.3
Vibration isolated machine unit

7.2 Spring vibration isolators

7.2.1 Steel coiled springs are most commonly used as vibration isolators. Spring characteristics are specified based on data available in reference books or catalogs. Data and formulas for stiffness characteristics of springs are given in Annex 10.

7.2.2 Vibration isolation system spring generally operate under asymmetric loading at $\tau_m > \tau_0$. Dependencies for assessment of stresses in springs are given in Annex 10.

7.2.3 Fatigue safety factor is calculated by the following relationship:

$$\frac{\tau_{-1}}{\tau_a + \psi_\tau \tau_m} > n_\tau = 2{,}0 \qquad (7.2.3)$$

where $\tau_a \frac{\tau_{\max} - \tau_{\min}}{2}$ – variable stress amplitude;

$\tau_m \frac{\tau_{\max} - \tau_{\min}}{2}$ – mean stresses;

$\psi_\tau \frac{2\tau_{-1} - \tau_0}{\tau_0}$ – factor of material sensitivity to the cycle asymmetry;

τ_{-1} – endurance limit for symmetric cycle;

τ_0 – endurance limit at non-alternating loading condition;

7.2.4 For unsteady loading condition, fatigue strength shall be checked based on the hypothesis of the linear damage accumulation regarding the number of loading cycles for each testing condition.

The cumulative damage is not calculated if the REM securing conditions (refer to 7.2.3) are met for all testing conditions.

7.3 Rubber vibration isolators

7.3.1 Unlike spring vibration isolators, rubber vibration isolators have larger non-elastic resistance factor that allows for increase of damping of natural vibrations and reduction of resonance vibration amplitude.

7.3.2 Dynamic characteristics of rubber vibration isolators as well as performance assessment criteria shall be given as inputs or calculated based on reference or normative data, for example:

GOST 17053.1-80. AKSS type marine shock-absorbers (rubber-metal shock-absorbers are designed for vibration isolation and protection of different equipment and devices against impacts);

TU 38 105 1636-90. ASD type rubber-metal shock-absorbers are designed for protection of equipment against vibrations (from 5 to 2000 Hz) and impacts (multiple impacts with acceleration of up to 8.0g, single impacts with shock acceleration of 15.0g).

7.3.3 The specific feature of rubber shock-absorbers is that their stiffness is different under static and dynamic loads. Dynamic compression modulus of rubber E_d used in calculations is larger than static modulus E_p. The variation of moduli of elasticity with rubber hardness (Shore hardness) is given in datasheets and catalogs

For basic mechanical characteristics of rubber, refer to Annex 11.

7.3.4 The load-bearing capacity of rubber and rubber-metal shock-absorbers is assessed by relative deformation

upon shock-absorber compression by value h_z –

$$e = h_z/H, \qquad (7.3.4\text{-}1)$$

upon shock-absorber shifting by value h_g –

$$\gamma = h_g/H, \qquad 7.3.4\text{-}2$$

7.3.5 For permissible relative deformation of shock-absorbers, refer to Table 7.3.5, and Annex 11.

Table 7.3.5

Permissible relative deformation of rubber shock-absorbers

Shock-absorber deformation	Type of load	
	steady dynamic	static and quasi-static with random and occasional short-term dynamic
Compression, [ε]	0.05 to 0.1	0.1 to 0.15
Shear, [γ]	0.1 to 0.15	0.2 to 0.3

7.3.6 For assessment of load-bearing capacity of rub-ber shock-absorbers, the following condition shall be met

$$n_\varepsilon = [\varepsilon]/\varepsilon \geq 1{,}1, \quad (7.3.6\text{-}1)$$

$$n_\gamma = [\gamma]/\gamma \geq 1{,}1, \quad (7.3.6\text{-}2)$$

where n_ε, n_γ – compression and shear margin of the rubber shock-absorber, respectively.

7.4 Damping devices of vibration isolation system

7.4.1 To increase the efficiency of vibration isolation system, damping elements of different designs may be used:

hydraulic shock-absorbers;

high-viscosity dampers;

dry friction damper.

7.4.2 Design characteristics of dampers for simulation of mechanical tests are specified according to data from catalogs or technical specifications.

7.4.3 Catalogs and technical specifications also contain criteria (permissible displacement [D] and load [P] criteria) based on which load-bearing capacity of damping devices is assessed.

7.4.4 For assessment of load-bearing capacity of damping devices, the following condition shall be met

$$n_P = [P]/P \geq 1{,}1, \quad (7.4.4\text{-}1)$$

$$n_D = [D]/D \geq 1{,}1, \quad (7.4.4\text{-}2)$$

where n_P, n_D – load and displacement margin for a damping device, respectively.
P, D – design load and displacement in a damping element of the vibration isolation system, respectively.

Annex 1

DATA FOR DEVELOPMENT AND VERIFICATION OF COMPUTER-BASED MODEL

1. The design documentation in a scope providing for development of the design model with basic dynamic characteristics of the structure is used for development of the REM computer-based model and calculations.

2. Basic data include the following:

weight of REM components;

center of gravity position of REM and individual parts;

assembly drawing of REM and drawings of basic components (rotor, bearing assemblies, frame with stator, fasteners as well as other components to be taken into account in the design model (for example, additional attached equipment);

types of bearings and their dynamic characteristics, bearing loads obtained by the Customer during motor design;

results of motor structure tests (damping constant, frequencies of individual structural components, stiffness of individual structural components that may be used for verification of the motor design model);

mechanical properties of materials of REM components.

3. Apart from being used in development of the computer-based model, some data may be also used to verify the design model.

4. The basic component of REM is a rotor which behavior under dynamic actions determines the loading conditions and level of dynamic loads on structural components. Loads on REM components may be specified using the general diagram of loads (refer to Fig. 4) specified based on inputs given in technical assignment and design documentation, and with regard to mechanical test conditions, where

G – gravity force of rotor shaft with;

$P_{\text{м}}$ – oriented offset magnetic force;

$P_{\text{н}}$ – force due to unbalanced rotor determined based on rotor imbalance;

a, b – distances from supports *D* and *N* to shaft center of gravity;

l_0 – distance between supports *D* and *N*;

P_n – axially compressed spring force (index 1 is to be taken where a support *D* is a movable support, and index 2 where a support *N* is a movable support.

Where a shaft is positioned vertically (with support *D* underneath), force *G* will be directed along the shaft axis to support *D*.

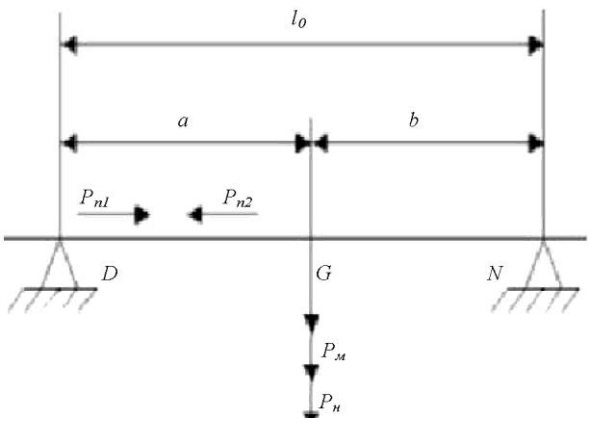

Fig. 4
Diagram of rotor loads during mechanical tests

5. The possibility to assess the accuracy of calculations and check of correct development of the REM computer-based model are one of the main phases during acceptance of REM calculation results.

6. For verification of REM computer-based models designed for calculations for mechanical actions, the following three options may be considered:

Option 1: data from technical documentation are available only including strength calculations;

Option 2: data from technical documentation as well results of standard tests performed in accordance with Regulations for the Design of Electrical Installations are available based on which parameters of the REM computer-based model may be assessed (for example, clearances in bearings or rotor axial play);

Option 3: in addition to data for options 1 and 2 tests to determine stiffness and dynamic characteristics of REM structural components are performed.

7. For parameters based on which check and verification of the REM computer-based design model designed for computer-aided simulation of mechanical tests may be performed, refer to Table 7.

Table 7

Parameters to verify design models

Parameter	Designation	Data from technical documentation	Tests	
			Static	Dynamic
Motor gravity force, N	G_o	+	–	–
Gravity force of rotor shaft with core, N	G	+	–	–
Motor center of gravity coordinates, mm	X	+	–	–
	Y	+	–	–
	Z	+	–	–
Radial stiffness of movable support bearing, N/mm	K_{RD}	+	+	+
Radial stiffness of fixed support bearing, N/mm	K_{RN}	+	+	+
Axial stiffness of fixed support bearing, N/mm	K_{AN}	+	+	+
Shaft deflection, mm	d	+	+	–
Shaft vibration frequency, Hz	f	+	–	+
Resonance frequencies, Hz	$f_{r1}, f_{r1}, \ldots f_{ri}$ [1)]	–	–	+
Damping factor	k [1)]	–	–	+
[1)] parameter may be specified for individual structural components of REM				

8. When the Option 1 is considered, weight characteristics of the REM computer-based model and its components are assessed.

9. Availability of data according to Option 2 allows for clarification of separate parameters of the REM computer-based model by accounting for additional information during model development.

10. Option 3 provides for static and/or dynamic tests.

10.1. Static tests may include calculation of stiffness characteristics of individual structural components of REM, for example, to determine stiffness characteristics of bearing shields. Such an approach generally requires no special-purpose dynamic benches and allows for experimental validation of calculation results obtained based on static tests of full-scale objects.

10.2. Dynamic tests are to be performed in accordance with GOST 30630.1.1-99 "Mechanical environment stability test methods for machines, instruments and other industrial products. Determination of dynamic characteristics of structure". Two types of tests are provided:

test to determine dynamic characteristics of structure (test 100);

test for resonance frequencies of the structure within the specified frequency band (test 101).

10.3 Table 10.3 shows methods that are used to determine dynamic characteristics of structures according to GOST 30630.1.1-99.

Table 10.3

Test methods to determine dynamic characteristics

Designation	Method
100-1	Continuous variation of a sine vibration frequency
100-2	Shock method to determine the lowest resonance frequency of product assemblies having piecewise linear elastic response
100-3	Free vibration method to determine natural frequencies and damping factors of products
100-4	Stepwise frequency variation (fixed frequency method)
100-5	Broad-band random vibration method

10.4. It is reasonable to determine dynamic parameters of individual structural components, for example, bearing shields, rotor, stator and, if these data are available, verify the models of individual components to be further included in the REM computer based model.

11. Comparison of test results makes it possible to assess the correctness of the REM computer-based model and check calculation result at the computer-based model development phase.

Annex 2

BASIC RULES FOR DEVELOPMENT OF DESIGN MODELS

1. Design model shall take into account individual structural components whose inertial and stiffness characteristics may significantly affect vibration of the whole structure.

Mathematical simulation makes it reasonable to use a principle of decomposition/segmentation of an object under study into simpler elements whose separate study requires much less resources as compared to calculation of the whole system. This principle is particularly effective when studying products consisting of a great deal of similar components and assemblies.

The system design model may be developed by composition of design models with checking of their adequacy which also simplifies the development of the common model for REM.

2. Criteria (dynamic division criteria) according to which subsystem models may not be composed as individual subsystems in the REM model are adopted as a criterion for the need of composition/ segmentation of individual components in a model, if:

$$M_s/M_p < 0{,}01;$$

$$0{,}01 \leq M_s/M_p \leq 0{,}10;$$

$$0{,}80 < f_s/f_p$$

где $M < 1{,}25$,

M_s – subsystem weight;

M_p – structure weight;

f_s – first frequency of a subsystem;

f_p – first frequency of vibrations of a bearing structure.

3. Diagrams in Fig. 3 showing three options of design models may be used to assess the effects of dynamic interaction of the subsystem with the common system:

Model A: main system with weight M_p and subsystem with weight M_s are calculated separately ($M_s/M_p < 0{,}01$);

Model B: the design model takes into account inertial properties of the subsystem only ($M_s + M_p$);

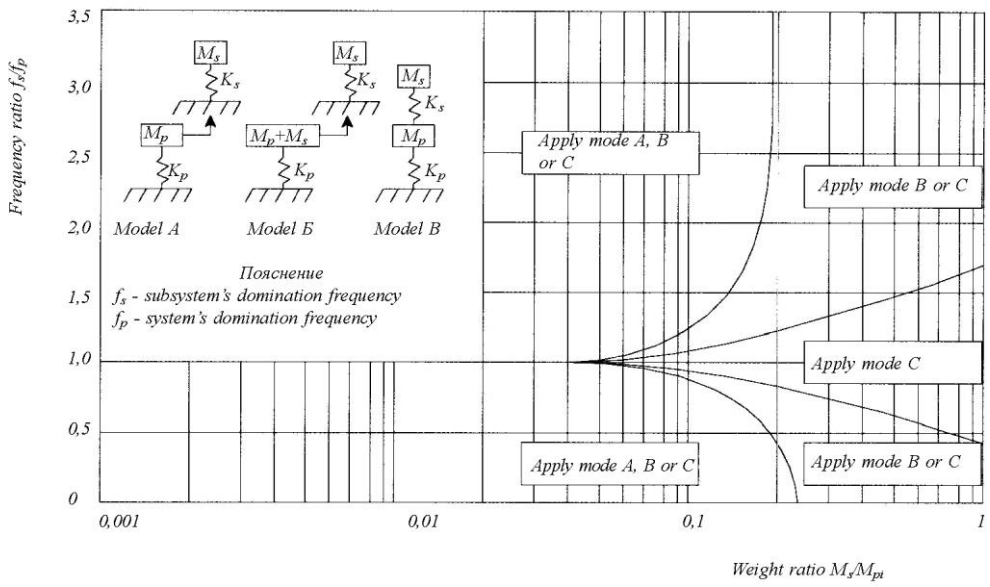

Fig. 3
Criteria for inclusion of a subsystem into the structural design model

Model C: a unified design model for the common system is considered which includes the detailed model of the subsystem.

4. Model B is used for multiple purposes. Where computational capabilities of the software systems used for calculations do not allow this option to be applied, the ways to simplify the design models may be substantiated using the given criteria.

The simplified models shall be substantiated and agreed upon with RS.

Annex 3

SIMULATION OF REM ROTOR SUPPORTING MEMBER

1. For simulation of rotor-REM support interaction, it is recommended to account for the design and type of bearings. Formulas to determine bearing bases are given in Table 1.

Table 1

Formulas to determine bearing bases

Bearing type	Support pattern	Formula
Radial Double- and four-row radial and thrust bearings Double radial and thrust bearings when angles of contact β are directed differently	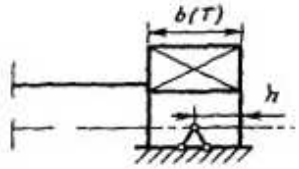	$h = b/2$ or $h = T/2$
Radial bearings fitted by two on each support	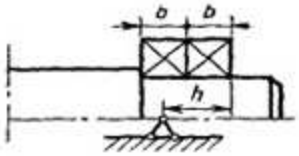	$h = \frac{7}{2}b$
Single-row radial and thrust bearings Single-row tapered roller bearings	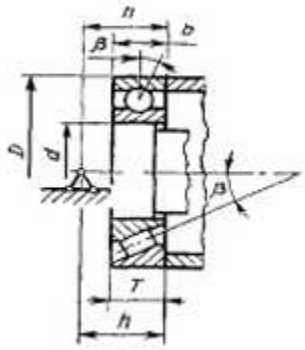	$h = \frac{1}{2}\left(b + \frac{d+D}{2}\text{tg}\beta\right)$ or $h = \frac{1}{2}(T + \frac{d+D}{2}\text{tg}\beta)$
Double radial and thrust bearings when angles of contact β are directed one way	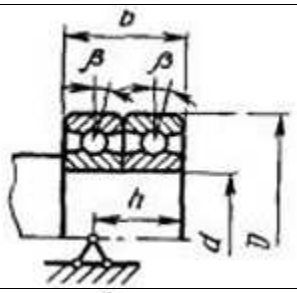	$h = \frac{1}{2}b + \frac{d+D}{2}tg\beta$
Sliding bearings	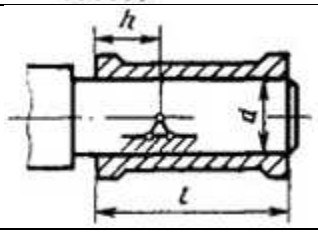	$h = 0.3l$. but max. $0.5d$

Annex 4

DETERMINATION OF ROLLING BEARING STIFFNESS

4.1 General

1. All design categories of rolling bearings are classified as follows:

By direction of application of the taken up load bearings are divided into following groups:

radial bearings that mainly take up a radial load i.e load applied normal to the bearing axis of rotation;

thrust bearings that mainly take up an axial load i.e load applied lengthwise the bearing axis of rotation;

radial and thrust bearings that take up combined load i.e load simultaneously applied in radial and axial directions, where both radial and axial load may be a dominant one;

thrust and radial bearings that mainly take up an axial load.

By shape of rolling elements bearings are divided into ball and roller bearings.

The stiffness of the rolling bearings is characterized by elastic deformations of the loaded bearing. These deformations are generally very small and may be neglected. However, in some cases, for example, spindle assemblies of machines or driving shafts of pinions, the bearing stiffness is critical.

Due to specific features of contact between rollers and rolled races, stiffness of roller bearings is larger than that of ball bearings.

The bearing stiffness may be increased through pre-tensioning.

When developing dynamic models of electric machines, rotor natural frequencies depend on stiffness of a bearing assembly.

The stiffness of a bearing assembly is mainly determined by the stiffness of a bearing/its structure itself, radial clearance, axial play or pretension, stiffness of main components of the bearing assembly that withstand load (shaft, case, fasteners), seating tension when bearing is fitted onto the shaft or into the case.

Table 1-1 shows formulas for calculation of radial and axial deformation at a point of contact of the most loaded roller with rolled races at a zero clearance for different bearings.

Table 1-1

Formulas for calculation of radial and axial deformation in rolling bearings

Bearing type	Deformation of bearing rings relative to each other	
	Radial – δ_{r0}	Axial – δ_{a0}
Single-row radial ball bearing	$2.0 \times 10^{-3} \sqrt[3]{Q^2/D_T}$	–
Single-row radial and thrust ball bearing	$\frac{2.0 \times 10^{-3}}{\cos\alpha} \sqrt[3]{Q^2/D_T}$	$\frac{2.0 \times 10^{-3}}{\sin\alpha} \sqrt[3]{Q^2/D_T}$
Double-row spherical radial bearing	$\frac{3.2 \times 10^{-3}}{\cos\alpha} \sqrt[3]{Q^2/D_T}$	$\frac{3.2 \times 10^{-3}}{\sin\alpha} \sqrt[3]{Q^2/D_T}$
Double-row spherical radial roller bearing	$\frac{1.2 \times 10^{-3}}{\cos\alpha} \sqrt[4]{Q^3}$	$\frac{1.2 \times 10^{-3}}{\sin\alpha} \sqrt[4]{Q^3}$
Radial cylindrical roller bearing with short rollers	$6.0 \times 10^{-4} \frac{Q^{0.9}}{l^{0.8}}$	–
Tapered radial and thrust bearing	$\frac{6.0 \times 10^{-4}}{\cos\alpha} \frac{Q^{0.9}}{l^{0.8}}$	$\frac{6.0 \times 10^{-4}}{\sin\alpha} \frac{Q^{0.9}}{l^{0.8}}$

Bearing type	Deformation of bearing rings relative to each other	
	Radial – δ_{r0}	Axial – δ_{a0}
Single ball bearing	–	$\frac{2.4 \times 10^{-3}}{\sin\alpha}\sqrt[3]{Q^2/D_T}$
D_T and l – diameter and length of rollers, respectively Q – radial/axial load which is taken up by the most loaded roller α – nominal/initial angle of contact equal to angle between load line of action on the roller and a plane normal to the bearing axis, deg		

Angle of contact α determines the bearing capability to withstand the axial load. With the increase in angle of contact, axial load-bearing capacity increases due to decrease in a radial one. The capability to withstand the one-sided axial load for single-row bearings is shown in Table 1-2, where F_r – unused permissible radial load.

Table 1-2

Permissible axial load on radial and thrust bearings

Roller shape	Bearing type	Angle of contact α, deg	Permissible axial load, F_a
Ball	6000	12	$0{,}3F_r$
	36000 and 136000	12	$0{,}73F_r$
	46000	26	$1{,}53F_r$
	66000	36	$2{,}03F_r$
Roller	7000 and 67000	10 to 17	$< 0{,}73F_r$
	27000	25 to 29	$< 1{,}5F_r$

2. Radial stiffness of the bearing

Radial stiffness of the bearing is determined by the following relationship:

$$C_r = F_r/\delta_r, \tag{2-1}$$

where F_r – radial load on support, N;
δ_r – radial deformation of the bearing under load, mm.

Radial deformation of the bearing is determined by the following relationship:

$$\delta_r = \delta'_r + \delta''_r, \tag{2-2}$$

where δ'_r – radial deformation at a point of contact of the most loaded roller with the rolled race;
δ''_r – Radial deformation at a point of contact of bearing rings with mounting surfaces of the shaft and case.

Radial deformation at a point of contact of the most loaded roller with the rolled race depends on installation method and determined by the following relationships:

with pretension $\delta'_r = \beta\delta_{r0}$, (2-3)

with radial clearance $\delta'_r = \beta\delta_{r0} + g_r/2$, (2-4)

where δ_{r0} – radial deformation at a point of contact of the most loaded roller with the rolled race at a zero clearance;
β – factor of tension/clearance in a bearing;
g_r – radial clearance, mm.
δ_{r0} – value for different bearings may be determined from equations given in Table 1-1 according to radial load taken up by the most loaded roller

$$Q = \frac{5F_r}{i \cdot z \cdot \cos\alpha}, \qquad (2\text{-}5)$$

where I – number of roller rows;
z – number of rollers per row;
α – angle of contact, deg
δ_{r0} – value (μm) may be also determined in bearings by the following formulas:

radial ball bearing

$$\delta_{r0} = 5{,}85\left(\frac{F_r}{i \cdot z}\right)^{2/3} \frac{1}{D_T^{1/3}}, \qquad (2\text{-}6)$$

radial cylindrical roller bearings

$$\delta_{r0} = 5{,}85\left(\frac{F_r}{i \cdot z}\right)^{0.9} \frac{1}{l^{0.8}} \qquad (2\text{-}7)$$

Factor β which accounts for tension or clearance in a bearing is determined by diagram as shown in Fig. 2.

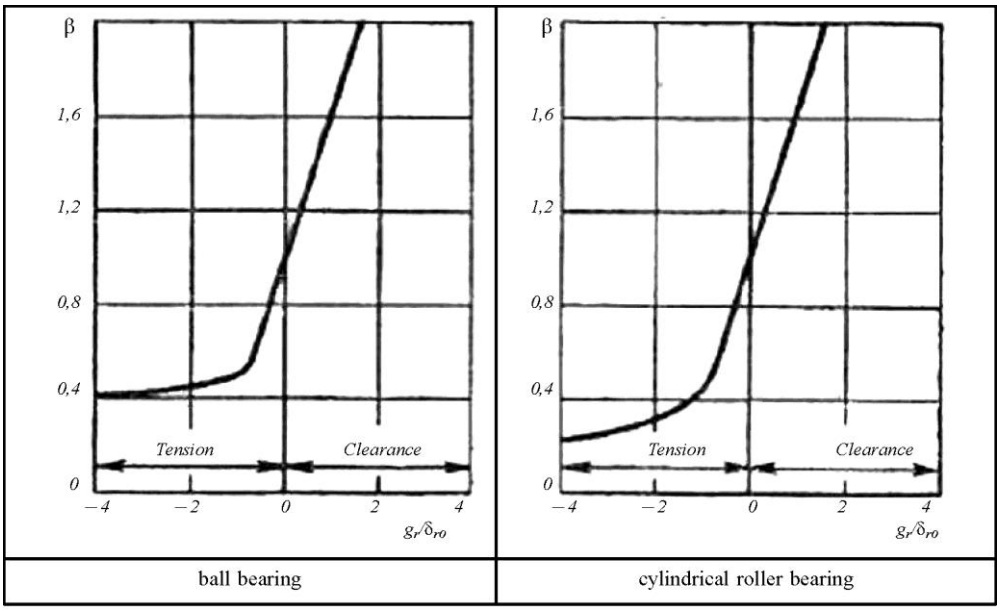

Fig. 2
Determination of factor β for

Radial deformation at a point of contact of bearing rings with mounting surfaces of the shaft and case is determined by the following relationship:

$$\delta_r'' = \frac{4F_r k}{\pi d B}\left(1 + \frac{d}{D}\right), \qquad (2\text{-}8)$$

where k = 0.005 to 0.025 mm³/kgf (lesser values shall be taken for increased accuracy of mounting points and high tension);
d, D, B – internal, external diameter and width of a bearing, mm, respectively.

3. Axial stiffness of the bearing

Axial stiffness of the bearing is determined by the following relationship:
with pretension

$$C_a = \frac{F_a + A_0}{\delta_a} \quad (3\text{-}1)$$

with axial play

$$C_a = \frac{F_a}{\delta_a + 2S}, \quad (3\text{-}2)$$

where F_a – axial load on bearing, N;
A_0 – pretension force, N;
δ_α – axial deformation of the bearing under load, mm.
$2S$ – full axial play in the bearing.

value for different bearings may be determined from equations given in Table 1-1 according to axial load taken up by the roller

$$Q = \frac{F_a}{z\sin\alpha}, \quad (3\text{-}3)$$

Axial deformation δ_a is determined only at a point of contact of rollers with rolled races (in this case, axial deformation at a point of contact of a bearing with mating end faces of the shaft and case is not taken into account).

The stiffness of supports on rolling bearings may be sufficiently increased due to pretension A_0 which is specified based on reference data.

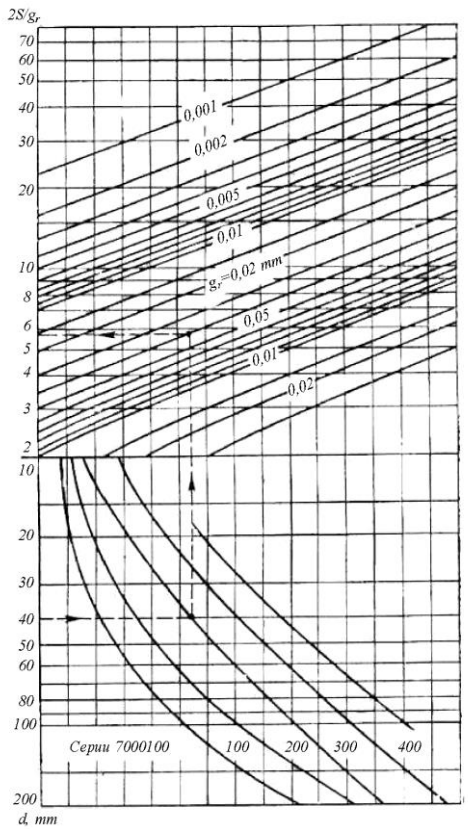

Fig. 4-1
Nomogram to determine axial play in a single-row radial ball bearing with the known radial clearance

4. Radial clearance and axial play in bearings

Radial clearance g_r is a clearance between rings and rollers due to that some free displacement of rings relative to each other occurs in a radial direction.

Axial play *S* is a total axial displacement of the bearing ring from one outermost position to the other when the paired ring is fixed.

Initial radial clearances and axial play of radial and radial and thrust bearings are given in reference books. As an example, Tables A4-3 and A4-4 show radial clearances and axial play for different rolling bearings. Bearings designed for operation in normal conditions shall have a radial clearance corresponding to the main row.

Axial play values for ball and roller radial and thrust bearings are divided into two rows: first row: for bearings fitted by two on the same support;

second row: for bearings fitted by one on each support

For single-row radial ball bearings axial play at a known value of radial clearance may be determined by nomogram as shown in Fig. 4-1.

Table 4-1

Radial clearances in rolling bearings

Hole diameter d, in mm		Radial clearance for main row, μm			
		Single-row radial ball bearings		Radial cylindrical roller bearings with short rollers	
Above	Up to	min	max	min	max
30	40	12	26	30	45
40	50	12	29	30	45

Hole diameter d, in mm		Radial clearance for main row, μm			
		Single-row radial ball bearings		Radial cylindrical roller bearings with short rollers	
Above	Up to	min	max	min	max
50	65	13	33	35	55
65	80	14	34	40	60
80	100	16	40	45	65
100	120	20	46	50	75
120	140	23	53	60	90
140	160	23	58	70	105
160	180	24	65	75	115
180	200	29	75	80	120
200	225	33	83	90	135
225	250	35	90	100	150
250	280	40	100	110	165
280	315	45	105	120	180
315	355	50	115	135	205
355	400	55	125	150	225

Table 4-2

Recommended axial play in rolling bearings

Hole diameter d, mm		Permissible axial play limits for angle of contact (for 1/2 row), μm							
		Single-row radial and thrust ball bearings				Single-row tapered roller bearing			
		α =12°		α = 26° and α = 36°		α = 10° to 16°		α = 25°to 29°	
Above	Up to	min	max	min	max	min	max	min	max
30	50	30/40	50/70	15	30	40/50	70/100	20	40
50	80	40/50	70/100	20	40	50/80	100/150	30	50
80	120	50/60	100/150	30	50	80/120	150/200	40	70
120	180	80/100	150/200	40	70	120/200	200/300	50	100
180	260	120/150	200/250	50	100	160/250	250/350	50	100
260	360	–	–	–	–	200	300	–	–
360	400	–	–	–	–	250	350	–	–

Annex 5

DAMPING CHARACTERISTICS IN REM STRUCTURES

1. Tables 1-1 to 1-3 show values of damping constant *k* for different structural components based on reference book ("Vibration in engineering science", Volume 6, Part 2 "Damping of Vibrations").

Table 1-1

Damping constant in rolling bearings

Rolling bearings	range of *k*		mean *k*
Single-row radial bearing, one per support (No.212)	0.014	0.019	0.016
Single-row radial bearing, two per support (No.212)	0.023	0.033	0.028
Double-row spherical radial bearing, one per support (No.212)	0.017	0.024	0.020
Cylindrical roller bearing (No.212)	0.019	0.036	0.027
Tapered roller bearing (No.7512)	0.025	0.034	0.029
Double-row cylindrical bearing (No. 3182112)	0.023	0.029	0.026
Radial and thrust ball bearing (No.212 and 8144)	0.037	0.048	0.043

Table 1-2

Damping constant in threaded joints

Threaded joints (bending)	range of *k*		mean *k*
M20*1.5 (from 50 to 125 Hz)	0.005	0.03	0.017

Table 1-3

Damping constant in flat joints

Flat joints	*k*
Steel and cast iron joints	0,012
Textolite-cast iron/steel joint	0,028

2. Table 2-1 shows values for factors α and β depending on stresses and frequency subband specified according to 10.5.3.3of the RS Rules which provide damping level in the design model as recommended by GOST 17516.1-90 and GOST 30546.1-98.

Table 2-1

Recommended design Rayleigh damping parameters

Frequency subband	Stress level	*k*	*α*	β
2 to 8	(0,25-0,5) σ_T	0,04	0,804	1,273E-3
	(0,5-1,0) σ_T	0,07	1,407	2,228E-3
8 to 16	(0,25-0,5) σ_T	0,04	2,681	5,305E-4
	(0,5-1,0) σ_T	0,07	4,691	9,264E-4
16 to 31.5	(0,25-0,5) σ_T	0,04	5,333	2,681E-4
	(0,5-1,0) σ_T	0,07	9,334	4,691E-4
31.5 to 63	(0,25-0,5) σ_T	0,04	10,556	1,347E-4
	(0,5-1,0) σ_T	0,07	18,473	2,358E-4
63 to 80	(0,25-0,5) σ_T	0,04	17,716	8,904E-5
	(0.5-1.0) σ_T	0.07	31.003	1.558E-4

3. Damping factor in the design model may be determined by methods as illustrated in Table 3-1.

Table 3-1

Methods to determine damping parameters

Method	Diagram	Dependency
analysis of free damping vibrations	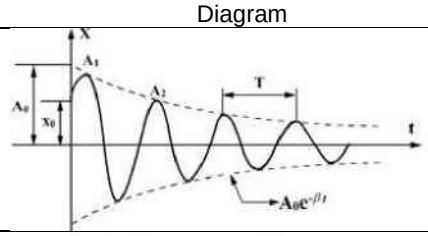	$k \approx \frac{1}{2\pi n}\ln(A_1/A_{n+1})$ n – number of cycles for damping of amplitude from A_1 to A_{n+1}
analysis of amplitude-frequency response of the system	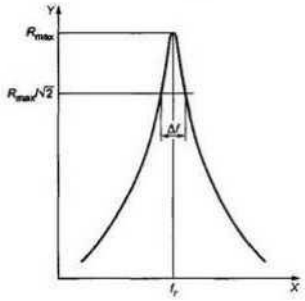	$k \approx \frac{f_2 - f_1}{2f_r}$ f_r – resonance frequency; $(f_2 - f_1)$ – resonance peak bandwidth at a level of $0{,}707R_{max}$

4. When verifying the design model, shock load calculation may be performed based on which free damping vibration plots are obtained. Using records of free vibrations of motor structural components, according to the diagram shown in Fig. 4 relative damping in the structure may be determined (GOST 30630.1.1-99).

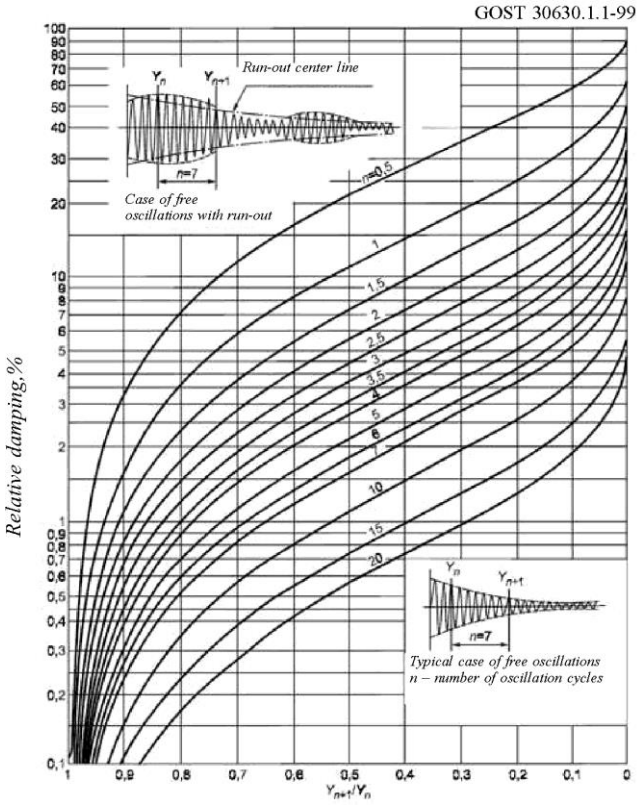

Fig. 4
Relative damping in a product

Annex 6

BASIC MECHANICAL CHARACTERISTICS OF METALS

1. For basic mechanical characteristics of metals, refer to Table 1.

Table 1

Basic mechanical characteristics of metals

Metal description	Rolled products, thermal treatment	Strength class, grade	Thickness, diameter of rolled products, mm	σ_T, МПа	σ_B, МПа	σ_{-1}, МПа
Common quality carbon steel bar and shaped sections according to GOST 535, GOST 380	Bars, shaped sections	Ст 3 сп	up to 10	255	380	180
			10 to 20	245	370	170
		Ст 5 сп	up to 10	295	490	230
			10 to 20	285	490	230
			20 to 40	275	490	255
Rolled plate from carbon steel of general quality according to GOST 14637, GOST 380	Plates, flats	Ст 3 сп	up to 20	245	370	–
			20 to 40	235	370	–
		Ст 5 сп	up to 20	285	490	–
			20 to 40	275	490	–
			40 to 100	265	490	–
Rolled products for structural steel constructions according to GOST 27772	Plates, wide flats, sections	C255	2,0 to 3,9	255	380	–
		Ст 3 сп	4 to 10	245	380	–
			10 to 20	245	370	–
			20 to 40	235	370	–
	Shaped sections		4 to 10	255	380	–
			10 to 20	245	370	–
			20 to 40	235	370	
	Plates, wide flats, sections	C285	2,0 to 3,9	285	390	–
		Ст 3 сп	4 to 10	275	390	–
			10 to 20	265	380	–
	Shaped sections		4 to 10	285	400	–
			10 to 20	275	390	–
	Plates, wide flats, sections	C345	2,0 to 3,9	345	490	–
		12Г2С	4 to 10	345	490	–
		09Г2С	10 to 20	325	470	–
	Shaped sections		4 to 10	345	490	–
			10 to 20	325	470	–
			20 to 40	305	460	–
	Plates, wide flats, sections	C345K	4 to 10	345	470	–
		10ХНДП				
	Shaped sections		4 to 10	345	470	–

Metal description	Rolled products, thermal treatment	Strength class, grade	Thickness, diameter of rolled products, mm	σ_T, МПа	σ_B, МПа	σ_{-1}, МПа
Rolled products for structural steel constructions according to GOST 27772	Plates, wide flats, sections	С375	2,0 to 3,9	375	510	–
		12Г2С	4 to 10	375	510	–
			10 to 20	355	490	–
			20 to 40	335	480	–
	Shaped sections		4 to 10	375	510	–
			10 to 20	355	490	–
			20 to 40	335	480	–
	Plates, wide flats, sections Normalizing	С390	4 to 50	390	540	–
		14Г2АФ				
	Plates, wide flats, sections Normalizing	С440	4 to 30	440	590	–
		16Г2АФ	30 to 50	410	570	–
	Plates, Wide flats, sections	С590	10 to 36	590	685	–
		12Г2СМФ				
	Improvement					
Rolled steel with increased strength according to GOST 19281	Bars, flats, shaped sections	С375,	up to 10	375	510	235
		15ГФ,		375	510	
		10Г2Б		375	510	
	Plates, formed sections	15ГФ, 10Г2Б	up to 10			235
		14Г2АФ	10 to 50			–
	Bars, flats, shaped sections	390,	up to 15	390	530	240
		10ХСНД	up to 20	390	530	240
		15Г2СФ				
	Plates, formed sections	12Г2Б	up to 10	390	510	235
		15Г2СФ	up to 32	390	510	235
		15Г2АФДпс	up to 32	390	510	235
Rolled steel with increased strength according to GOST 19281	Plates, formed sections	С440,	up to 32	440	590	265
		16Г2АФ 18Г2АФпс				
Steel castings according to GOST 977	Normalizing	20Л	–	216	412	165
		25Л		235	441	175
		30Л		255	471	190
		20ГЛ		275	540	215
		20ФГ		294	491	195
		20Г1ФЛ		314	510	200
		30ГСЛ		343	589	230
		30ХГСФЛ		392	589	240
	Quench + tempering	20ГЛ	–	334	530	–
		30ГСЛ		392	638	–
		32Х06Л		441	638	–

Metal description	Rolled products, thermal treatment	Strength class, grade	Thickness, diameter of rolled products, mm	σ_T, МПа	σ_B, МПа	σ_{-1}, МПа
		30ХГСФЛ		589	785	–
Cold-resistant and wear-resistant steel castings according to GOST 21357	Normalizing	20ГЛ	–	300	500	–
		20ФТЛ		320	520	–
		30ХГ2СТЛ		600	700	–
	Quench + tempering	20ГЛ	–	400	550	–
		20ФТЛ		450	570	–
		30ГЛ		490	660	–
		30ХГ2СТЛ		650	750	–
		30ХЛ		550	660	–
		110Г13Л		400	800	–
Sheets of aluminium and aluminium alloys according to GOST 21631	Plating	АМг2	5,0 to 10,5	–	175	–
		АМг3	5 to 6	80	185	–
		ditto	6,0 to 10,5	80	185	–
		АМг5М	0,6 to 4,5	145	275	100
		То же	4,5 to 10,5	130	275	100
		АМг5	5 to 6	130	275	100
		ditto	6,0 to 10,5	130	275	100
		АМг6М	up to 10,5	155	315	110
		АМг6	5,0 to 10,5	155	315	110
		1915	5,0 to 10,5	195	315	–
Pressed sections out of aluminium and aluminium alloys according to GOST 8617	Pressed sections	АМг2	All sizes	59	147	–
		АМг3,АМг5		78	176	–
		АМг5М,		127	236	90
		АМг6		127	255	90
		АМг6М		157	314	110
		1915		196	314	110
		1915Т		216	343	120
		1935		155	245	–
		1935Т		155	245	–
Aluminium casting alloys according to GOST 1583	–	АМг12			147	–
		(АЛ2)			147	–
		АМг5МП		–	196	–
		(АЛ28)	–	–	196	–
		АМг6Л		–	186	–
		(АЛ23)			186	–
		АМг6лч			196	–
		(АЛ23-1)			196	–
Weld or deposited weld metal (metal covered electrodes for manual arc welding of structural	–	Э42	–	–	411,5	–
		Э46		–	450,8	–
		Э50		–	490,0	–

Metal description	Rolled products, thermal treatment	Strength class, grade	Thickness, diameter of rolled products, mm	σ_T, МПа	σ_B, МПа	σ_{-1}, МПа
and heat-resistant steels according to GOST 9467)		Э42А		–	411,6	–
		Э46А		–	450,0	–
		Э50А		–	490,0	–
Weld or deposited weld metal (metal covered electrodes for manual arc welding of high-alloyed steel with special properties according to GOST 10052)	–	Э-07Х20Н9	–	–	539	–
		Э-07Х19Н11		–	539	–
		М3Г2Ф		–	539	–
		Э-08Х19Н10Г2Б		–	539	–
		Э-08Х20Н9Г2Б		–	588	–
		Э-10Х25Н13Г2Б		–	588	–
		Э-03Х15Н9АГ4				
Flake graphite iron for castings according to GOST 1412	–	СЧ15	up to 50	–	105	–
		СЧ20		–	140	–
		СЧ25		–	180	–
		СЧ30		–	220	–
		СЧ35		–	260	–
Spheroidal graphite iron for castings according to GOST 7293	–	ВЧ35	–	220	350	–
		ВЧ40		250	400	–
		ВЧ45		310	450	–
		ВЧ50		320	500	–
Malleable iron castings according to GOST 1215	–	КЧ30-6	–	–	294	–
		КЧ35-10		–	333	–
		КЧ37-12		–	362	–
		КЧ45-7		–	441	–
Rivets classes B and C according to GOST 10304	–	Ст2, Ст3	2 to 24	–	310	–
		10кп,15кп		–	310	–
		10,15		–	330	–
		09Г2		–	380	–
		12Х18Н9Т		–	430	–
		АМг5П		–	160	–
Bolts, screws and studs according to GOST 1759.4	Hot stamping	Class 3.6	6 to 36	190	330	–
		10,10кп				
	Cold stamping	Class 5.8	–	420	520	–
		10,10кп, 20,20кп				

Metal description	Rolled products, thermal treatment	Strength class, grade	Thickness, diameter of rolled products, mm	σ_T, МПа	σ_B, МПа	σ_{-1}, МПа
Rolled steel with increased strength according to GOST 19281	Bars, flats, shaped sections	295	up to 20	305	440	200
		09Г2	20 to 32	295	430	200
		09Г2, 09Г2С				
	Plates, formed sections	09Г2	up to 20	305	440	200
		09Г2, 09Г2С	20 to 32	295	430	200
	Bars, flats, shaped sections	325	up to 20	325	325	210
		09Г2С	up to 32	325	450	210
		14Г2, 15ГФ				
		15ХСНД				
	Plates, formed sections	09Г2С	10 to 20	325	470	210
		14Г2, 15ГФ	up to 32	325	450	210
		10Г2С1	20 to 60	325	450	210
	Bars, flats, shaped sections	345	up to 10	345	480	220
		09Г2С,		345		
		10Г2С1,		345		
		10ХНДП		345	480	220
		15ХСНД,	10 to 20	345	480	220
		15ГФ				
	Plates, formed sections	09Г2С,	up to 10	345	490	225
		17ГС.				
		10Г2С1 14ХГС				
		10ХНДП				
		15ГФ,	up to 10	345	470	220
		17Г1С	10 to 20	345	490	225
		15ХСНД	up to 32	345	490	225
Note. Characteristics of materials not specified herein shall be established according to appropriate specifications and regulatory documents.						

2. Table 1 shows minimum reduced values of σ_m and $\sigma_в$ as well as mean values of endurance limit σ_{-1} for bending strain based on literature, reference and experimental data.

3. Where endurance limit data are not available, the following empirical relationships are recommended for calculations:

for mild and low alloy structural steels Ст3, steel 20, 09Г2, 09Г2С, 15ГФ $\sigma_{-1} = 0.5\sigma_в$;

for cast steels 20Л, 20ЛГ, 20ФЛ, 15ГФ $\sigma_{-1} = 0.45\sigma_в$;

for aluminum alloys АМг5, АМг6, 1915 $\sigma_{-1} = 0.4\sigma_в$.

4. All mechanical characteristics are given for temperature of 20 °C.

5. Yield stresses for weld materials for arc welding are recommended to be taken for electrodes:

342 и Э42А – $\sigma_m = 0,65\sigma_в$,

Э46, Э46А, Э50 и Э50А – $\sigma_m = 0,5\sigma_в$,

where $\sigma_в$ – ultimate strength of weld material

6. For steels, fatigue curve equation shall be taken as follows:

$$\sigma_\alpha^m = \sigma_{-1}^m N_G$$

при $\sigma_\alpha \geq \sigma_{-1}$ (6)

$$N = \infty$$

при $\sigma_\alpha < \sigma_{-1}$.

7. Where fatigue characteristics of steel of interests are not available in references, slope factor of the left-hand branch of the fatigue branch is to be based on approximate correlation relationships:

$$m \approx 1K\left(5 + \frac{\sigma_B}{80}\right) \quad (7\text{-}1)$$

$$N_G = 2 \times 10^6 \text{ cycles} \quad (7\text{-}2)$$

where K – factor which accounts for influence of different structural factors and is based to account for mutual effects of structural factors by the following formulas:

$$K = \frac{(K_\sigma/K_d + 1/K_F - 1)}{K_v} \quad (7\text{-}3)$$

8. References and industry-related regulatory documents cover recommendations to account for other structural process and operating factors such as high and low temperature, corrosion, presence of aggressive media, radiation, presence of tension, frequency and shape of loading cycle, etc.

9. Values of factors of cycle asymmetry influence on limiting amplitudes ψ_σ and ψ_τ for laboratory specimens are determined by the following formulas:

$$\psi_\sigma = 0{,}02 + 2 \times 10^{-4}\sigma_в \quad (9\text{-}1)$$

$$\psi_\tau = 0{,}5\psi_\sigma \quad (9\text{-}2)$$

For parts, values of factors are to be divided by K.

10. Where operating temperature of REM structural components exceeds 50 °C, mechanical characteristics corresponding to working conditions shall be taken into account during calculation.

Temperature correction factors based on data given in PNAE G7-002-86 are shown in Table 10, where k_m and $k_в$ are yield stress and ultimate strength correction factors, respectively.

Table 10

Material operating temperature correction factors

Material	*T*, °C	20	50	100	200	300
Ст 3	kт	kт	kт	kт	1.00	1.00
	kв	kв	kв	kв	1.00	1.00
09Г2С	1.00	1.00	1.00	1.00	0.97	1.00

Material	*T*, °C	20	50	100	200	300
	1.00	1.00	0.97	1.00	0.98	1.00
08X18H10T	0.95	0.96	0.96	1.00	0.76	0.88
	0.95	1.00	0.94	0.94	0.92	1.00
AMr3	0.92	1.00	0.71	0.8	0.88	–
	0.85	0.82	0.76	1.00	0.77	–

11. Where data on temperature influence on endurance limits are not available, correction factors k_m and $k_в$) given in Table 11 (SNiP 2.04.12-86, SP 33.13330.2012) are recommended for calculation.

Table 11

Steel operating temperature correction factors

Steels	*T*, °C	0 – 40	50	100	200	300
Carbon	kт	kт	kт	1.0	1.0	1.0
	kв	kв	kв	1.0	1.0	1.0
Low alloy	0.98	0.95	0.98	0.95	0.91	0.95
	1.0	0.98	0.98	1.0	0.95	0.95
Alloy	0.87	0.87	0.87	0.71	0.8	0.8
	1.0	0.95	0.87	1.0	0.91	0.8

12. For physical and mechanical properties of tin and lead white metals, refer to Table 12.

Table 12

Physical and mechanical properties of tin and lead white metals

White metal grade	Density, g/cm^3	Brinell hardness HB 5/62, 5/60, HB 2, 5/15, 6/60 at 20°C	σ_T, N/mm^2	σ_B, N/mm^2
Б88	7,35	27 to 30	–	–
Б83	7,38	27 to 30	80 to 85	110 to 120
Б83С	7,4	27 to 30	–	–
БН	9,55	27 to 29	70 to 74	125 to 130
Б16	9,29	30	86	147
БС6	10,05	15 to 17	–	–

13. Nominal permissible stresses for material are determined by the following relationship:

$$[\sigma] = \min\begin{cases} \frac{k_T k_T}{1,5} \\ \frac{k_B k_B}{2,6} \end{cases} \quad (13)$$

Annex 7

EFFECTIVE STRESS CONCENTRATION FACTOR

Table 1

Effective stress concentration factor for welded joints

Joint description	Joint type	Stress concentration factor, K_σ
Rectangular bar welded from: *a)* stamped U-shaped components; *b)* two channels	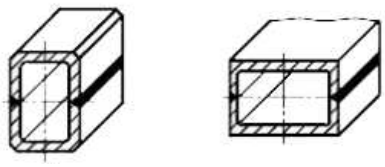 а) б)	1,0 1,1
Rectangular bar welded from: *a*) stamped U-shaped components; *b)* two channels	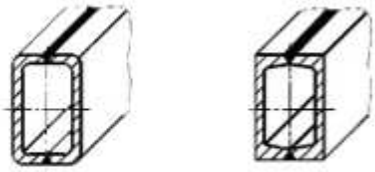 а) б)	*a*) 1,0 *b*) 1,1
I-beam	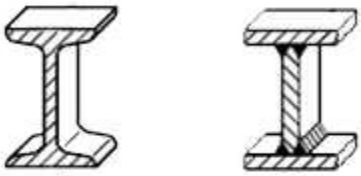 а) б)	

Mating of two beams:
a) R = 50 mm and above;
b) R = 50 mm and less;
c) at right angle
	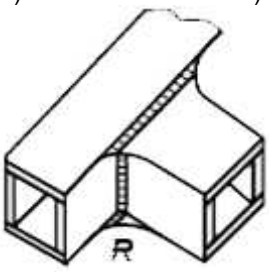
	
		a) 1,3 to 1,5
		b) 1,6 to 2,0
		c) 2,1

Connection of two beams with intermittent weld	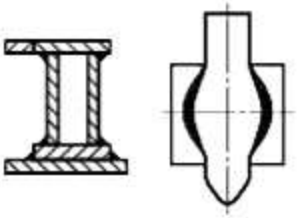	1,7 to 2,1
Rectangular bar welded rolled plates	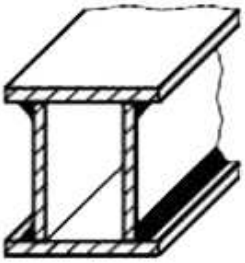	1,1

Joint description	Joint type	Stress concentration factor, K_σ
Hollow beam (two channels or I-beams combined with upper and lower plates)	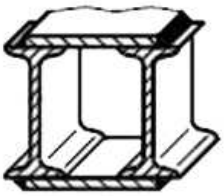	1,1
Welding of vertical member or bracket or stiffeners (shown with dotted line) to the horizontal plate of the beam, connection at a right angle	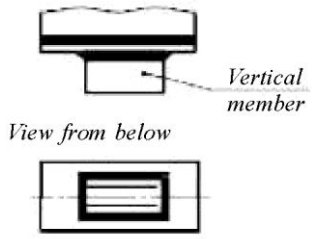	2,1
Bush welding: *a)* butt welding with preparation of edges of welded components *b)* lap welding	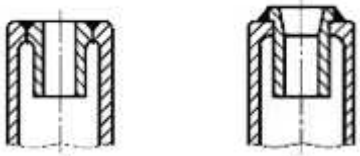	*a)* 1,4 – 1,6 *b*) 1,7 – 2,1

Annex 8

SLIDING BEARING CALCULATION

1. Assessment of radial semi-dry and semi-fluid friction bearings

Mean operating pressure between journal and linear is determined by the following formula:

$$p_c = \frac{F_r}{dl} \tag{1-1}$$

where F_r – radial load on a bearing, N;
d – ournal diameter, in mm;
l – journal length, mm.

Design peripheral speed of a journal

$$v = \frac{\omega d}{2} = \frac{\pi d n}{60} \tag{1-2}$$

where ω – angular speed of a journal, rad/s;
n – rotation speed,1/min.

Then

$$p_c v = \frac{F_r \omega}{2l} = \frac{\pi n F_r}{60 l} \tag{1-3}$$

2. Assessment of semi-dry and semi-fluid friction bearings

For thrust sliding bearing, mean operating pressure under pivot is determined as follows:

$$p_c = \frac{4F_a}{\pi(d^2 - d_0^2)K_\psi}, \tag{2-1}$$

where Fa – axial load, N;
d and d_0 – external and internal diameter of pivot, mm;
$K\psi = 0{,}8\ldots0{,}9$ – factor which accounts for reduction of a mounting surface due to lubricating oil grooves.

Design peripheral speed of a shaft

$$V = \frac{\omega R_{np}}{2} \tag{2-2}$$

where R_{np}– reduced radius, mm,

$$R_{np} = \frac{1}{3}\frac{d^3 - d_0^3}{d^2 - d_0^2} \tag{2-3}$$

3. Assessment of radial fluid friction bearings

In a steady-state operating condition, thickness h of a lubricating oil layer shall exceed the sum of microroughness of a journal R_{z1} and liner R_{z2} (Fig. 3), where R_{z1} and R_{z2} – roughness of surfaces of a journal and liner, respectively (sum of peak-to-valley heights of stud and

bearing for a selected cleanliness class according to GOST 2789-73 "Surface roughness. Parameters and characteristics".

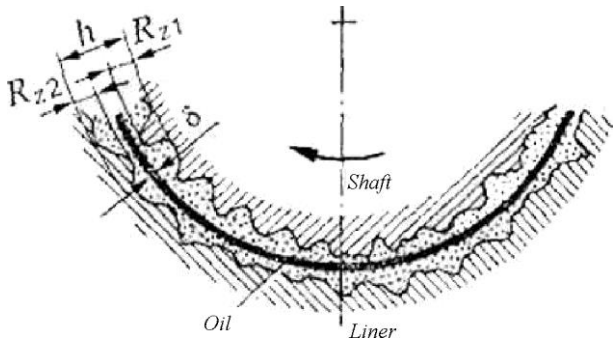

Fig. 3
Lubricating oil layer for a steady-state operating condition

Violation of a fluid friction condition with regard to shaft geometry is determined by the following relationship:

$$h_{кр} = R_{z1} + R_{z2} + y \tag{3-1}$$

where y_0 – deflection of a stud in a bearing: for two-bearing shaft may be determined as $y_0 = 1{,}6(l/L)y_{\max}$, in other cases, yo is determined during shaft calculation.
$y_{\max}$ – shaft deflection on the area between bearings,
L – distance between bearing centers.

For assessment of load-bearing capacity of sliding bearings when exposed to mechanical actions in the fluid friction condition the following parameters are known:

p – load,
ω – angular speed;
d и l – dimensions of a bearing;
$\psi = \Delta/d = (D - d)/d$ – relative diametric clearance in a bearing;
D – liner diameter;
$\chi = \Delta/\delta$ – excentricity ratio;
$\delta = \Delta/2$ – radial clearance;
μ – dynamic viscosity, MPa×s, determined with regard to oil grade and operating temperature based on reference data.

A loading factor Φ_p is introduced which is determined by the following relationship:

$$\Phi_p = \frac{p\psi^2}{\mu\omega} \tag{3-2}$$

For a given l/d and Φ_p value of % is determined according to Table 3.
Thickness of a lubricating oil layer in the bearing in the fluid friction condition:

$$h_{\min} = \delta(1 - \chi). \tag{3-3}$$

Table 3

Dimensionless bearing loading factor Φ_p

l/d	χ												
	0,4	0,5	0,6	0,65	0,7	0,75	0,8	0,85	0,9	0,925	0,95	0,975	0,99
	Coverage angle 180º												
0,4	0,141	0,216	0,339	0,431	0,573	0,776	1,179	1,775	3,195	5,055	8,39	21,00	65,26
0,5	0,209	0,317	0,493	0,622	0,819	1,098	1,572	2,428	4,261	6,615	10,71	25.62	75,86
0,6	0,283	0,427	0,655	0,819	1,070	1,418	2,001	3,036	5,314	7,956	12.64	29,17	83,21
0,7	0,361	0,538	0,816	1,014	1,312	1,720	2,399	3,580	6,029	9,072	14,14	31,88	88.90
0,8	0,439	0,647	0,972	1,199	1,538	1,965	2,754	5,053	6,721	9,992	15,37	33,99	92,89
1,0	0,589	0,853	1,263	1,528	1,929	2,469	3,372	4,808	7,772	11,38	17,18	37,00	98,95
1,2	0,723	1,033	1,489	1,796	2,247	2,838	3,787	5,364	8,533	12,35	18,43	39,04	102,90
1,5	0,891	1,248	1,763	2,099	2,600	3,242	4,266	5,947	9,304	13,34	19,08	41,07	106,84
	Coverage angle 120º												
0.4	0,132	0,198	0,325	0,448	0,602	0,846	1.259	2,050	3,706	5,497	9,73	25,73	83,10
0,5	0,183	0,261	0,463	0,620	0,826	1,144	1,676	2,674	4,717	6,880	12,57	29,33	90,50
0,6	0,245	0,364	0,592	0,788	0,979	1,420	2,052	3,209	5,556	7,994	13,55	32,73	95,52
0,7	0,299	0,441	0,709	0,935	1,221	1,656	2,365	3,654	6,213	8,849	14,80	34,30	99,03
0,8	0,349	0,512	0,815	1,068	1,385	1,862	2,632	4,013	6,749	5,537	15,78	35,86	101,73
1.0	0,436	0,633	0,992	1,285	1,644	2,185	3,042	4,540	7,508	10,53	17,22	38,08	105,47
1,2	0,506	0,722	1,126	1,448	1,838	2,419	3,335	4,941	8,075	11,21	18.13	39,58	107,98
1,5	0,583	0,831	1,271	1,622	2,041	2,663	3,667	5,328	8,618	11,89	19,06	41,06	110,48

Annex 9

SPECIFICATIONS OF ANTI-FRICTION ALLOYS

1. Values of $[p]$, $[p_v]$ and $[v]$ are given in Tables 1 to 4 with respect to different bearing materials.

Table 1

Anti-friction cast iron for sliding bearings (GOST 1585-85)

Grade	Hardness, HB	$[p]$, N/mm^2	$[v]$, m/s	$[p_v]$, Nm/mm^{2}s
АЧС-1	180-229	0,05	2	0,1
АЧС-1	180-220	9	0,2	1,8
АЧС-2	190-229	0,1	3	0,3
АЧС-3	160-100	1,0	0,75	4,5
АЧВ-1	210-260	0,5	5	2,5
АЧВ-2	167-197	12	1,0	12,0
АКЧ-1	197-217	0,5	5	2,5
АКЧ-2	167-197	12	1,0	12,0

Notes:

1. For intermediate values of *v*, $[p_v]$ is determined by interpolation
2. Bearings of cast iron АЧС-1, АЧС-2, АЧВ-1, АКЧ-1 operates with a tempered and normalized shaft, and those of АЧС-3, АЧВ-2, АКЧ-2 – with untempered shaft.

Table 2

Bronze and brass for sliding bearings

Grade	Application	$[p]$, N/mm^2	$[v]$, m/s	$[p_v]$, Nm/mm^{2}s
Бр.ОФ10-1	Bearings of steam turbines, generators and motors, centrifugal pumps and compressors	15	10	15
Бр.ОФ6,5-0,15		–	–	–
Бр.ОЦС5-5-5		8	3	12
Бр.ОЦС6-6-3		5	3	10
Бр.ОЦС4-4-17		10	4	10
Бр.АЖ9-4	Bearings of centrifugal pumps and compressors, motors, metal-cutting machines, reduction gears, rolling mills	15	4	12
Бр.АЖ9-4Л		–	–	–
Бр.АЖМц10-3-1,5		20	5	12
Бр.АЖС7-1,5-1,5		25	8	20
ЛМцОС58-2-2-2	Bearings of conveyors, cranes, roller conveyors, reduction gears, vibrators, excavators, crushers	10	1	10
ЛКС80-3-3		12	2	10
ЛМцЖ52-4-1		4	2	6

Table 3

White metals and their substitutes

Grade	Application	$[p]$, N/mm^2	$[v]$, m/s	$[p_v]$, Nm/mm^{2}s
Б89; Б83	Heavy loaded bearings operating at a large sliding speed: steam turbines, turbogenerators, motors with power above 750 kW, internal combustion engines		20	15
Б16	Bearings of motors, tractors, centrifugal pumps and compressors, rolling mills and other machines operating without abrupt load variations	20	60	15
Б6	Bearings of reduction gears, pumps, fans, winches, ball crushers, small rolling mills and other machines operating with moderate operating load without abrupt shocks	15	12	10

Grade	Application	$[p]$, N/mm^2	$[v]$, m/s	$[p_v]$, Nm/mm^{2}s
БН	Bearings of steam turbines and medium-power motors, automotive engines, piston compressors and other machines operating with variable and shock load	5	6	5

Table 4

Sintered metal powder bearings ([*p*], in N/mm^2)

Материал	Porosity, %	$0{,}1v$, in m/s	$0{,}2v$, in m/s	$1v$, in m/s	$2v$, in m/s	$3v$, in m/s	$4v$, in m/s
Bronze-graphite, Sn content is 9 to 10 %, graphite content is 1 to 4%, the remaining is Cu	15 to 20	18	7	6	5	3,5	1,2
Bronze-graphite, Sn content is 9 to 10%, graphite content is 1 to 4%, the remaining is Cu	20 to 25	15	6	5	4	3	1
Bronze-graphite, Sn content is 9 to 10%, graphite content is 1 to 4 %, the remaining is Cu	25 to 30	12	5	4	3	2,5	0,8
Ferrographite, graphite content is 1 to 3 %, the remaining is Fe	15 to 20	25	8,5	8	6,5	4,5	1
Ferrographite, graphite content is 1 to 3 %, the remaining is Fe	20 to 25	20	7	6,5	5,5	3,5	0,8
Ferrographite, graphite content is 1 to 3 %, the remaining is Fe	25 to 30	15	5	5	4	2,5	0,6

Annex 10

SPRING CHARACTERISTICS

1. Characteristics of vibration isolation springs may be calculated using standards. For calculations parameters given in Table 1 are used.

Table 1

Design parameters of coil springs)

Designation	Unit of measurement	Value
E	N/mm^2	Modulus of elasticity of spring material
G	N/mm^2	Shear modulus of spring material
D	mm	Mean diameter of spring
d	mm	Diameter of a spring bar
L_0	mm	Length of unloaded spring
i	–	Number of operating/active coils
S	mm	Spring strain
R	N/mm	Vertical spring stiffness
R_Q	N/mm	Horizontal spring stiffness
f_e	in Hz	Lowest natural frequency of spring
ρ	kg/mm^3	Spring material density
τ_{-1}	N/mm^2	Endurance limit for symmetric cycle
τ_0	N/mm^2	Endurance limit at non-alternating loading condition

2. Compressive spring stiffness is determined by the following formula:

$$R = \frac{Gd^4}{8D^3 i} \tag{2-1}$$

Horizontal spring stiffness depends both on its geometrical dimensions and extent of its vertical loading,

Horizontal stiffness is determined with regard to two auxiliary parameters:

$$\lambda = \frac{L_0}{D} \tag{2-2}$$

Spring strain ratio –

$$\xi = \frac{s}{L_0} \tag{2-3}$$

Then a spring horizontal stiffness is determined by the following formula:

$$R_Q = R_\xi \left[\xi - 1 + \frac{1/\lambda}{1/2+G/E}\sqrt{\left(\frac{1}{2}+\frac{G}{E}\right)\left(\frac{G}{E}+\frac{1-\xi}{\xi}\right)} \times \tan\left\{\lambda\xi\sqrt{\left(\frac{1}{2}+\frac{G}{E}\right)\left(\frac{G}{E}+\frac{1-\xi}{\xi}\right)}\right\}\right]^{-1} \tag{2-4}$$

3. Vibration isolation properties are characterized by the natural frequency of a spring which is determined by the following formula when its both ends are fixed:

$$f_e = \frac{3560d}{iD^2}\sqrt{\frac{G}{\rho}} \tag{3-1}$$

To provide effective vibration isolation, natural frequencies of springs are to be beyond the dynamic loading frequency range.

From calculation of static and dynamic loads, we get axial F and transverse F_Q reaction force in a spring.

Transversal displacement of a spring is determined by the following relationship:

$$S_Q = F_Q / R_Q \tag{3-2}$$

Shearing stresses in a spring under combined action of axial and transverse load are as follows:

$$\tau = \frac{8k}{\pi d^3}\left[F\left(D + s_Q\right) + F_Q(L - d)\right], \tag{3-3}$$

where k – correction factor which accounts for increase in stresses in mean points of section of a bar due to shearing strain

$$k = \frac{D/d + 0{,}5}{D/d - 0{,}75} \tag{3-4}$$

Annex 11

BASIC MECHANICAL CHARACTERISTICS OF RUBBER

1. Basic mechanical characteristics of rubber are given in Tables 1-1 and 1-2, where:

[ε] – permissible compressive strain ratio;

[σ] – permissible compressive stress related to the initial cross-sectional area of a strainless rubber element;

[γ] – permissible compressive strain ratio;

[τ] – permissible shearing stress related to the initial cross-sectional area of a strainless rubber element;

Fig.1 shows a diagram illustrating variation of modulus of elasticity of rubber with form factor Φ and Shore hardness *h.*

Table 1-1

Permissible mechanical compression characteristics of rubber products

Parameter	Form factor Φ_1	Shear modulus, modulus of elasticity and permissible compressive stresses, MPa for Shore hardness					[ε]
		30±3	40±3	50±4	60±4	70±4	
Shear modulus *G*	–	0. to 0.5	0.5 to 0.6	0.6 to 0.8	0.9 to 1.1	1.3 to 1.5	–
Modulus of elasticity E_p	0.25	2.5 to 3.0	3.0 to 1.0	4.0 to 5.5	6.0 to 7.0	8.5 to 10.0	–
[σ] for static loads	0,25	0,5	0,6	0,8	1,0	12	0,15 to 0,20
	0,50	0,7	0,8	1,0	1,2	1,5	
	0,75	0,9	1,0	1,2	1,5	1,8	
	1,00	1,1	1,2	1,5	1,8	2,2	
	1,25	1,3	1,5	1,8	2,2	2,5	
	1,50	1,5	1,8	2,0	2,5	2,8	
[σ] for static load combined with with random and occasional dynamic loads	0,25	0,4	0,5	0,6	0,8	1,0	0,10 to 0,15
	0,50	0,5	0,6	0,8	1,0	1,2	
	0,75	0,7	0,8	1,0	1,2	1,5	
	1,00	0,9	1,0	1,2	1,5	1,8	
	1,25	1,1	1,2	1,4	1,8	2,2	
	1,50	1,3	1,5	1,6	2,0	2,5	
[σ] for steady dynamic loads	0,25	0,3	0,4	0,45	0,6	0,75	0.05 to 0.10
	0,50	0,4	0,45	0,6	0,75	0,9	
	0,75	0,55	0,6	0,75	0,9	1,1	
	1,00	0,7	0,75	0,9	1,1	1,3	
	1,25	0,8	0,9	1,0	1,3	1,6	
	1,50	1,0	1,1	1,2	1,5	2,0	

[1] The form factor is a ratio of the loading area to the free/side area of the part.

Table 1-2

Permissible mechanical shear characteristics of rubber parts

Parameter	Shear modulus and permissible tangential shear stresses, MPa for Shore hardness				[γ]
	40±3	50±4	60±4	70±4	
Shear modulus *G*	0,4 to 0,5	0,6 to 0,7	0,9 to 1,1	1,3 to 1,5	–
[τ] for static loads	0,2	0,2	0,4	0,5	0,35 to 0,5
[τ] for static load combined with random and occasional dynamic loads	0,15	0,2	0,25	0,3	0,2 to 0,3
[τ] for steady dynamic loads	0,1	0,15	0,18	0,22	0,1 to 0,15

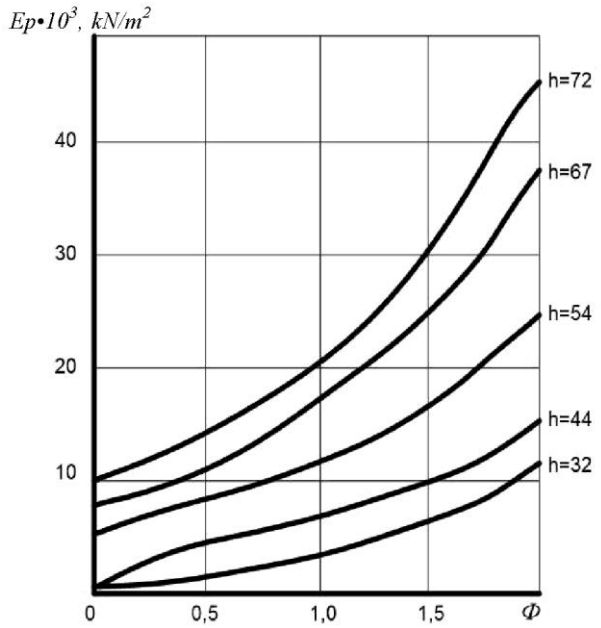

Fig. 1
Variation of E_P with form factor Φ and Shore hardness h

2. In practice, rubber parts operate at strain speeds which significantly exceed process relaxation speeds. Therefore dynamic modulus of elasticity differs from the static one and may be determined according to the following relationship:

$$E_d = k \cdot E_p, \tag{2-1}$$

where k – parameter which accounts for influence of strain rate on the modulus of elasticity for a given type of rubber. According to reference data, parameter k is within 1 to 2 and above.

Table 2 shows values of parameter k for rubbers with different stiffness at vibration frequency of 500 cycle/min (strain amplitude is not given).

Table 2

Permissible design parameters of coil springs

Shore hardness	30	45	50	60	65	70
k	1.5	1.32	1.22	1.18	1.21	1.3

Form factor determined by the following relationships:
for circular shock-absorber:

$$\Phi = \frac{D-d}{4H} \tag{2-2}$$

for rectangular shock-absorber:

$$\Phi = \frac{ab}{2(a+b)H}, \tag{2-3}$$

where D and d – external and internal diameter of shock-absorber;
a and b – shock-absorber base sides, mm;
H – height of shock-absorber, in mm.

If data are not available, stiffness of the rubber vibration isolator under longitudinal compression may be determined by the formula:

$$R_z = \frac{SE_d}{H} \tag{2-4}$$

where S – cross-sectional area of the shock-absorber;
E_d – dynamic modulus of elasticity;
H – height of shock-absorber.

The transverse/shear stiffness of the rubber vibration isolator may be determined by the following formula:

$$R_x = R_y = \frac{SG_d}{H}, \tag{2-5}$$

where G_d – dynamic shear modulus.

APPENDIX 17

BENCH FUNCTIONAL TESTS OF COMPOSITE (HYBRID) PROPULSIVE SYSTEMS

1 TEST PROCEDURE

1.1 Bench functional tests of composite (hybrid) propulsion systems (CPS) shall be carried out in maximum possible extent. If there is no possibility to carry out particular types of tests, these tests shall be transferred to the period of mooring and/or sea trials in compliance with 1.5.7, Part IV "Technical Supervision during Manufacture of Products".

1.2 Equipment provided by the RS Nomenclature and being part of composite (hybrid) propulsion systems, prior to the beginning of bench trials shall pass post-manufacturing tests in appropriate scope and according to the requirements specified in the relevant Sections of Part IV "Technical Supervision during Manufacture of Products".

1.3 Bench trials shall be carried out by a calendar schedule developed by the manufacturer of CPS (or by a firm in charge for the tests) and agreed with RS on the basis of approved test program.

2 DOCUMENTATION SUBMITTED BEFORE TRIALS

2.1 Bench tests of CPS shall be carried out according to the program approved by the Register. Prior to the bench tests commencement, the following documents shall be submitted:

document on readiness of the bench for tests;
structural bench scheme and plan of equipment location;
electrical and hydraulic wiring schemes (if any) of composite (hybrid) propulsion systems;
calibration records on the bench instrumentation and qualification of testing equipment;
working design documentation for the CPS equipment;
program and procedure for bench tests of CPS;
operating instructions for the CPS equipment;
service logs (data sheets) on the CPS equipment;
copies of the RS Certificates on the CPS equipment;
copies of reports for previously carried out tests of the CPS equipment.

3 TEST CONDITIONS

Prior to the tests, all installation, wiring, commissioning and adjustment works shall be completed.

The bench tests shall be carried out under conditions close to operational ones. Thus, the bench shall be equipped with the devices including loading ones, providing achievement of necessary features of tested system.

4 LIST OF CHECKS

Scope of bench tests (regarding design and functionalities of the tested system) shall include:

a) mandatory checks:

visual inspection of the CPS equipment and quality of installation on the bench;

check of reliable work of turning gear;

inspection of minimal resistant idle speed of the main heat engine (ME) and at its load according to the propeller curve;

control check of heat ME and electrical propulsion plant (EPP) from remote control stations and local control station of the engine, inspection of reliable switches as well as compliance of reversing devices and speed regulation system to the imposed requirements by using oscillography records of transient processes;

check of simplicity and ease of manual controls switches as well as precise positioning of these controls;

check of start of the CPS engines under all design combinations;

check of frequency regulation of the CPS engines under all design combinations;

check of stop of the CPS engines under all design combinations;

check of emergency stop of the CPS engines under all design combinations;

check of reverse of the CPS engines under all design combinations;

check of reliable and stable functioning of RAC, control, alarm, blocking and protection systems;

CPS torsiography to verify that no barred speed range under all design combinations at speed ahead and astern is present;

check of service parameters (static and dynamic features) of automation facilities (speed regulation, etc.);

functional check of disengaging devices (couplings, reverse-reduction gears) shall be carried out in compliance with 5.7.12, Part IV "Technical Supervision during Manufacture of Products";

functional check of the CPS equipment;

functional check of cooling and lubrication systems;

check of maintenance and repair ease of CPS with standard units, auxiliary machinery, systems and devices when using standard special tools and devices;

the equipment check after specified duration of bench tests (revision);

control check of CPS in operation with its standard units, auxiliary machinery, systems and devices.

Check for correct assembly, adjustment and maintenance of main technical parameters within the limit specified in the technical documentation;

b) check of modes if they are provided by the CPS structure:

check of generator operation mode of EPP;

check of electrical heat ME starting from the EPP;

check of other modes provided by the CPS design.

5 DURATION OF TESTING

5.1 The duration of tests shall be sufficient to establish required modes and to control and measure the parameters.

6 TESTING EQUIPMENT AND MEASUREMENT TOOLS

6.1 Bench tests shall be carried out with all standard bench instrumentation including remote monitoring devices. When testing, additional (bench) instrumentation and devices are used the scope and quantity of which are determined by the nature and quantity of measured parameters specified in the test program.

6.2 Bench instrumentation applied during the tests shall have current calibration records. Prior to tests, relevant documents shall be submitted to the RS surveyor.

6.3 The features of the loading device shall provide comprehensive tests of CPS under all modes provided by the test program at speed ahead and astern. Maintenance of test specimen during testing shall be carried out according to the operating instructions with standard tools and devices.

7 DOCUMENTS DRAWN-UP AFTER TESTS

7.1 With the positive results of bench functional tests of CPS, a report on survey of the specimen on an established form is drawn up according to 1.5.10, Part IV "Technical Supervision during Manufacture of Products".

7.2 With the negative results of bench functional tests of CPS in compliance with 1.5.9, Part IV "Technical Supervision during Manufacture of Products" the product is not approved to use onboard.

11 REFRIGERATING EQUIPMENT

11.1 GENERAL

11.1.1 The provisions of this Section apply in technical supervision of the refrigerating equipment being part of the marine refrigerating plants (MRP) to be supervised by the Register according to the RS Nomenclature.

11.1.2 The Register shall define the scope, nature and methods of surveys as well as the standards and methods of testing machinery, heat exchangers, vessels, pipes and fittings, insulating materials and automatic devices of the MRP.

11.1.3 General regulations for the organisation of the technical supervision during the manufacture of the refrigerating equipment are set out in Part I "General Regulations for Technical Supervision", those concerning the technical documentation – in Part II "Technical Documentation".

11.1.4 Survey of the sets, compressors, pumps, fans, heat exchangers and vessels, automatic and safety devices, fittings and pipes as well as insulating materials shall be performed in accordance with the requirements of the Rules for the Classification and Construction of Sea-Going Ships and also on the basis of the documentation and certificates on materials and their propertied approved by the Register.

11.1.5 When surveying finished products made of blanks (forgings, stampings, castings, rolled stock, etc.) a document confirming the compliance thereof with the approved technical documentation shall be submitted to the Surveyor to the Register.

11.1.6 Technical supervision during the manufacture of the refrigerating equipment shall be performed in accordance with the RS Nomenclature and Table 11.1.6. In case of stable production, based on the requirements of this Section, to specify the scope of supervision at various stages of the manufacture of the refrigerating equipment and with due account of the production process, the firm (manufacturer) shall draw up a list of items (refer to 12.2, Part I "General Regulations for Technical Supervision") which shall be reviewed and approved by the RS Branch Office which performs technical supervision at the firm (manufacturer) concerned. Based on the experience gained in the technical supervision during construction and operation of the refrigerator ships, the RS Branch Office has the right to require appropriate amendments to be made in the List.

Table 11.1.6

Nos.	Item of technical supervision	Checks			Tests				Inspe-ction
		tech. documen-tation	components and assemblies[1]	welded joints, assembly work	hydraulic for strength	pneu-matic leak	vacuumtight[2]	bench	
1	Piston compressor:	+	+	+		+	++	+	
1.1	bed plate, frame			+					
1.2	block-crankcase, cylinder block	+	+		+				
1.3	cylinder, cylinder liner	+	+		+				+
1.4	crankshaft	+	+						+ +
1.5	connecting rod, rod	+	+						+ +
1.6	piston	+	+						+
1.7	crankshaft gland								++
1.8	covers of cylinders, crankcase, pump drive, etc.				+				
1.9	suction and discharge valves							+	+
1.10	piston rings and pins								++

Nos.	Item of technical supervision	Checks			Tests				Inspe-ction
		tech. documen-tation	component s and assemblies[1]	welded joints, assembly work	hydraulic for strength	pneu-matic leak	vacuumtight[2]	bench	
1.11	bearing shells:								
	.1 main								++
	.2 connecting rod								++
1.12	gear wheels	+							++
1.13	capacity regulator								++
1.14	couplings	+							+
2	Rotary compressor:	+	+	+		+	++	+	
2.1	bed plate			+					
2.2	casing, cylinder, cover	+	+		+				++
2.3	vane rotor, rotor shaft	+	+						+
2.4	rotor shaft gland								++
2.5	discharge valve							+	++
2.6	bearings								++
2.7	gear wheels	+							++
2.8	couplings	+							+
3	Screw compressor:	+	+	+		+	++	+	
3.1	bed plate			+					
3.2	casing, casing cover	+	+		+				++
3.3	screw rotor	+	+						+
3.4	rotor seals								++
3.5	journal and thrust bearings								++
3.6	gear wheels of synchronizing pair	+	+	++					+
3.7	step-up gear	+	+						+
3.8	capacity regulator				+				++
3.9	couplings	+							+
4	Turbo-compressor:	+	+	+		+	+	+	
4.1	bed plate			+					
4.2	casing	+	+		+				++
4.3	shaft	+	+						++
4.4	impellers	+	+	+					+
4.5	return-circuit rig	+	+	+					+
4.6	diffuser	+	+	+					+
4.7	blades	+	+						+
4.8	shaft seals	+	+	+					+
4.9	bearings			+					+
4.10	step-up gear wheels and pinions	+	+	+					
4.11	capacity regulator								++
4.12	couplings	+							+
5	Refrigerant pump:	+	+	+		+	++	+	
5.1	bed plate			+					
5.2	casing, cylinder, cover	+	+		+				++
5.3	shaft, rotor, rod	+	+						++
5.4	impeller, screw, piston, gears	+	+						++
5.5	shaft and rotor seal								++
5.6	bearings								++
5.7	built-in electric motor	+	+	++					++
6	Secondary refrigerant pump:	+	+ +	++				++	
6.1	bed plate			++					
6.2	casing, cover, branch piece	+	+		++				++
6.3	shaft	+	+						++
6.4	impeller	+	+						++
6.5	bearings								++
6.6	couplings	+							+
7	Cooling water pump:	+	++	++				++	
7.1	bed plate			++	++				

Nos.	Item of technical supervision	Checks			Tests				Inspe-ction
		tech. documen-tation	components and assemblies[1]	welded joints, assembly work	hydraulic for strength	pneu-matic leak	vacuumtight[2]	bench	
7.2	casing, cover, branch piece	+	++						++
7.3	shaft	+	++						++
7.4	impeller	+	++						++
7.5	bearings								++
7.6	couplings	+							++
8	Fan:	+	++	++					
8.1	bed plate			++					
8.2	casing	+	++						++
8.3	shaft	+	++						++
8.4	impeller	+	++						++
8.5	bearings								++
8.6	couplings	+							++
9	Explosive type fan:	+	+	+				+	
9.1	bed plate			+					
9.2	casing	+	+						+
9.3	shaft	+	+						++
9.4	impeller	+	+						+
9.5	bearings		+						++
9.6	couplings	+							+
10	MRP vessels and heat exchangers with refrigerant space volume of 0,1 m^3 and over:	+		+	+	+	++	++	
10.1	bed plate			+					
10.2	casing	+	+	+	+				
10.3	end plates	+	+		+				
10.4	headers	+	+		+				
10.5	covers	+	+		+				
10.6	tube plates	+	+						
10.7	tubes	+	+		+				
10.8	anchor ties	+	+						
10.9	level indicators	+	+		+				
11	MRP vessels and heat exchangers with refrigerant space volume less than 0,1 m^3	+		++	+	+	++	++	
11.1	bed plate			++					
11.2	casing	+	+ +	++	++				
11.3	end plates	+	+ +		++				
11.4	headers	+	++		++				
11.5	covers	+	++		++				
11.6	tube plates	+	++						
11.7	tubes	+	++		++				
11.8	level indicators	+	++		++				
12	Fittings and piping:								
12.1	safety devices and valves:	+	++	++	+	+	++	+	+ +
12.2	valves:								
	.1 shutoff and regulating	+	++	++	+	+	++	++	+ +
	.2 solenoid	+	++	++	+	+	++	++	++
	.3 motor	+	++	++	+	+	++	++	++
	.4 check	+	++	++	+	+	++	++	++
12.3	headers, tubes	+	++	++	+	+	++		
13	Automatic protective and alarm devices (APA):								
13.1	switches:								
	.1 pressure (suction and discharge)	+	++	+	++	+	++	+	++
	.2 pressure differential (lubrication monitoring)	+	++	+	++	+	++	+	++
	.3 float	+	++	+	+	+	++	+	++
	.4 flow rate	+	++	++	++			++	++

Nos.	Item of technical supervision	Checks			Tests				Inspe-ction
		tech. documen-tation	components and assemblies[1]	welded joints, assembly work	hydraulic for strength	pneu-matic leak	vacuumtight[2]	bench	
	.5 temperature, pressure (secondary refrigerant temperature, discharge temperature monitoring)	+	++	+		+	++	+	++
	.6 electromechanical, thermal, combined		++	++				+	++
13.2	gas analyzer (fixed)	+	++	++		+	++	+	++
13.3	APA actuators	+	++	++				+	++
13.4	APA amplifiers	+	++	++				+	++
13.5	automated APA fittings	+	++	++	++	+		+	++
14	Automatic APA control system devices:								
14.1	controls of:								
	.1 temperature	+	++	++				++	++
	.2 pressure	+	++	++	++	++	++	++	++
	.3 refrigerating capacity	+	++	++				++	++
	.4 level	+	++	++	++	++	++	++	++
	.5 humidity	+	++	++				++	++
14.2	valves of:								
	.1 temperature control	+	++	++	++	++	++	++	++
	.2 water control	+	++	++	++			++	++
14.3	APA amplifiers	+	++	++				++	++
14.4	APA actuators and automatic fittings	+	++	++	++	++	++	++	++
15	Insulation	+	++					++	

[1] Surveys of components and assemblies are conducted to determine compliance with the requirements of the approved technical documentation with verification of marking and accompanying documents on materials.
[2] Vacuum-tight tests are carried out only for equipment using Group I refrigerants.

N o t e s : 1. Surveys marked + are conducted for classed and unclassed MRP.
2. Surveys marked ++ are conducted only for equipment and items of classed MRP.

11.1.7 The components of articles related to the machinery of the MRP shall have documents stipulated by the RS Nomenclature and confirming the compliance with the technical documentation approved by the Register.

11.2 TEST TYPES

11.2.1 Test programs for the refrigerating equipment including programs of acceptance tests during the functional inspection carried out by the firm (manufacturer) technical control body shall be approved by the Register.

11.2.2 Tests of samples to be carried out to award Type Approval Certificate shall be combined with the periodical or type tests.

11.3 TECHNICAL SUPERVISION DURING MANUFACTURE OF COMPRESSORS

11.3.1 When compressors are presented to the Surveyor who performs the technical supervision, documentation approved by the Register shall be submitted, including: specifications on delivery of compressors; bench test program; control, regulation and protection diagram with an explanatory note, as well as drawing showing crankcase oil heating arrangements, safety valves, by-passes and device to facilitate starting and control of the compressor refrigerating capacity; set of working documentation.

Besides the technical documentation mentioned above, description and instruction manual as well as, at the Surveyor's request, other technical documentation shall be submitted.

11.3.2 During the manufacture of compressors, survey in accordance with the list shall be performed.

11.3.3 When surveying the compressors and checking their components and main assemblies, the relevant provisions of Section 5 and this Chapter shall be taken as a guide.

11.3.4 After assembling, the compressors shall be subjected to pneumatic leak and vacuum-tight tests. Where no defects are present, the compressors shall be accepted for bench tests.

11.3.5 Bench tests shall be carried out according to the program approved by the Register, which shall define the scope and procedure of the tests. The said tests shall include running-in and functional tests which shall be conducted only if the results of running-in are successful. Where defects are detected during the running-in and subsequent inspection, they shall be corrected and the compressor shall be subjected to repeat running-in the positive results of which shall permit the compressor to be subjected to check functional tests.

11.3.6 In case of stable production of compressors, the scope of the bench tests shall be defined by the Register for each enterprise depending on the procedures and techniques adopted and steady quality of manufacture.

11.3.7 When surveying the bench equipment and performing supervision during the bench tests, the Surveyor shall be governed by the requirements of 5.12.18. The bench equipment shall ensure operation of the compressor with performance of full refrigeration cycle or "vapour ring" cycle using the refrigerant and oil specified in the technical documentation, with maintenance of the rated parameters and environmental conditions, namely: pressure and temperature before the suction and after the discharge connections as well as the refrigerant boiling and condensation; intermediate pressure and temperature for the two- and multiple-stage compressors; cooling water temperature at +32 °C and ambient air temperature at +50 °C.

In case of stable production, the refrigeration capacity of serial compressors may be defined by comparison of their volumetric capacity with that of the prototype or pilot samples.

11.3.8 In case of the compressor tests conducted to award Type Approval Certificate, provision shall be made for determination of the refrigeration capacity under several conditions (not less than 5) of volumetric capacity, consumed power, idle run and oil carry-over.

Safety valves of each compressor stage shall be checked for operation and discharge capacity under several conditions with the discharge valve of the compressor closed.

In addition, the compressors with built-in electric motors shall be subjected to check of their starting characteristics, temperature and resistance of the winding insulation. In the process of periodic tests, the stability of the compressor production quality, durability and reliability of the compressor components, main parameters shall be assessed with subsequent comparison of the quality of products turned out at different times.

The duration of the compressor test on bench shall be sufficient to reveal the specified characteristics and verify reliability. After the tests the compressors shall be inspected within the scope given in Table 11.1.6.

11.3.9 Inspection of the compressors after bench tests shall be performed within scope given in Table 11.1.6, after type or periodic tests – with full dismantling of the running gear and measurement of the rubbing parts.

11.3.10 If, based on the compressor test results, a decision is taken as to the possibility of installing the compressor on board, the Surveyor shall draw up a Report (Form 6.3.18) and issue the Register certificate.

In cases, specified in Section 6, Part I "General Regulations for Technical Supervision", the Report (Form 6.3.18) serves as a basis for issuance of Type Approval Certificate.

11.3.11 In case of stable production, the compressor which passed the bench tests shall obtain the Register certificate.

11.4 TECHNICAL SUPERVISION DURING MANUFACTURE OF REFRIGERANT PUMPS

11.4.1 Prior to the manufacture of the refrigerant pumps, the documentation approved by the Register within the scope specified by the rules shall be submitted to the Surveyor performing the technical supervision.

11.4.2 In the process of the manufacture of the refrigerant pumps, the Surveyor shall carry out control checks and surveys according to the list. After being assembled, the shaft with discs (vanes) shall be balanced in accordance with the firm (manufacturer) standards with subsequent presentation to the Surveyor for survey.

11.4.3 After being assembled, the pump shall be run in and tested on bench with the use of specified refrigerant according to the program approved by the Register.

The duration of the pump test on bench shall be sufficient to reveal the specified characteristics and reliability: in case of stable production – not less than 8 h and for tests mentioned in Note 4 to Table 11.4.6 – not less than 240 h.

After the tests the pumps shall be inspected within the scope given in Table 11.1.6.

11.4.4 The refrigerant pump which passed the bench tests under the Register technical supervision shall obtain the Register documents similarly to 11.3.10 and 11.3.11.

11.5 TECHNICAL SUPERVISION DURING MANUFACTURE OF SECONDARY REFRIGERANT AND COOLING WATER PUMPS

11.5.1 Technical supervision during the manufacture of the secondary refrigerant and cooling water pumps shall be performed in accordance with 5.8 and Table 11.1.6.

11.6 TECHNICAL SUPERVISION DURING MANUFACTURE OF FANS

11.6.1 Technical supervision during the manufacture of fans shall be performed in accordance with 5.10.8 and Table 11.1.6.

11.7 TECHNICAL SUPERVISION DURING MANUFACTURE OF HEAT EXCHANGERS AND PRESSURE VESSELS FOR REFRIGERANT, SECONDARY REFRIGERANT AND/OR COOLING WATER

11.7.1 Technical supervision during the manufacture of heat exchangers and pressure vessels shall be performed in accordance with Section 9 and Table 11.1.6.

11.7.2 Heat exchangers and pressure vessels shall be presented for survey with the mounted regular fittings and devices specified by the technical documentation.

During the external examination in the process of survey, the following shall be checked: condition of the external surfaces, availability, compliance with the drawing data and condition of the fittings and instruments; mounting of the safety valves; availability of a data plate on the casing; length of the branch pieces; thickness of the insulation installed.

11.7.3 Bench tests of the prototype (pilot) samples of the refrigerant heat exchangers and pressure vessels, freezing units, ice-making units as well as the tests in case of stable production and to confirm Recognition Certificate for Manufacturer shall be carried out in accordance with the program and procedure approved by the Register. The bench equipment shall provide operation of the abovementioned apparatus with performance of full refrigeration cycle using the refrigerant stated in the technical documentation.

During the bench tests of the heat exchangers the heat transfer coefficient, heat exchange rate and pressure loss under different operating conditions shall be determined, and for the freezing units and ice-making units – also the capacity.

In the process of tests of the condensers the following shall be measured: water flow rate, its temperature at the inlet and outlet of the unit; pressure differential on the water side; condensation temperature and pressure; refrigerant temperature at the inlet and outlet of the condenser; mass of the refrigerant passing therethrough.

When testing evaporators, the following shall be determined: refrigeration capacity, heat transfer coefficient, heat exchange rate, pressure loss on the secondary refrigerant and refrigerant side.

The refrigeration capacity of the evaporator shall be determined either by the mass of the refrigerant evaporated or by the amount of heat released by the secondary refrigerant.

When testing air coolers, the refrigeration capacity under different conditions shall be determined from the change in air or refrigerant state. In the first case, the mass (volume and density) of the circulating air as well as its temperature and humidity at the outlet of the unit shall be measured. When determining the refrigeration capacity from the change in the refrigerant state, the mass of the evaporated liquid at circulation ratio $n > 1$ shall be determined only by calorimetric method and at the circulation ratio $n = 1$ it may be determined by the volumetric or constriction method.

The duration of the test on bench shall be sufficient to reveal the specified characteristics and verify reliability.

11.7.4 Where the results of surveys carried out according to Table 11.1.6 and this Chapter are positive, the pressure vessels, heat exchangers and units with the refrigerant space volume of 0,1 m^3 and over shall obtain the Register documents similarly to 11.3.10 and 11.3.11.

11.8 TECHNICAL SUPERVISION DURING MANUFACTURE OF REFRIGERATING PLANT FITTINGS

11.8.1 When surveying shutoff, regulating and safety fittings, the Surveyor shall be guided by Sections 8 and 10 and Table 11.1.6.

11.8.2 The fittings in assembly, after strength, leak and tightness tests shall be subjected to pneumatic leak test of closure.

11.8.3 Safety spring-loaded valves, after strength, leak and tightness tests shall be subjected to tests to verify their setting and tightness of closing; whilst so doing, they shall be set to the operation pressure not higher than 1,1 the design pressure and shall close at the pressure not less than 0,85 the design pressure adopted in accordance with 2.2.1, Part XII "Refrigerating Plants" of the Rules for the Classification and Construction of Sea-Going Ships. The closing tightness shall be checked under the water by repeat rise of the pressure up to the design pressure after the valve is closed due to operation.

11.9 TECHNICAL SUPERVISION DURING MANUFACTURE OF REFRIGERATING PLANT INSTRUMENTS

11.9.1 Refrigerating plant fittings shall be tested according to the approved technical documentation.

11.9.2 Technical supervision during the manufacture and tests of the instruments of the protection and regulating automatic systems shall be performed according to Section 12 and Table 11.1.6.

11.9.3 Automatic protection, regulating and alarm systems of the automated machinery and units of the MRP shall be surveyed according to Sections 11 and 12, Guidelines on Technical Supervision of ship under Construction.

11.10 TECHNICAL SUPERVISION DURING MANUFACTURE OF THERMAL INSULATING MATERIALS

11.10.1 Thermal insulating materials shall be manufactured and tested in accordance with the approved technical documentation.

11.10.2 When carrying out surveys stated in note to Table 11.1.6, the following properties of the thermal insulating materials shall be checked:

.1 thermal: heat conductivity coefficient, specific heat;

.2 humidity: hygroscopicity (steam adsorptive capacity), water absorption (capacity to absorb water) and steam diffusion coefficient;

.3 mechanical and structural: density, specific surface and volume of pores, radius of micropores and their proportion in volume, ultimate strength, impact strength, elasticity modulus[1], fluidity and compactness (shrinkage)[2].

[1] To be determined for cellular insulating materials.
[2] To be determined for cellular, powder-like insulating materials.

11.11 HYDRAULIC TESTS FOR STRENGTH

11.11.1 Control over hydraulic tests of refrigerating equipment, individual assemblies and components shall be exercised by the Surveyor in accordance with Table 11.1.6. When performing supervision of the hydraulic tests, the Surveyor shall be guided by the requirements of Section 5 of this Part and Section 9, Guidelines on Technical Supervision of Ships under Construction.

11.11.2 The surfaces of the items subjected to the hydraulic tests shall have no protective coatings (nor shall be painted or tin-plated, etc.) and the openings intended for installation of the fittings and instruments shall be blanked off.

11.11.3 Items operating under pressure of the refrigerant and/or secondary refrigerant or cooling water shall be tested for strength by test pressure in accordance with the requirements of the Rules for the Classification and Construction of Sea-Going Ships. In the tests the prototypes shall be exposed to this pressure during not less than 1 h, while the serial specimens – not less than 10 min.

11.11.4 The items shall be considered to have passed the tests if no pressure drop, cracks, tears, leak, drips, drops or visible residual deformations are found.

11.12 PNEUMATIC LEAK TESTS

11.12.1 Control over the pneumatic tests of the refrigerating equipment operating under the refrigerant pressure shall be exercised by the Surveyor in accordance with Table 11.1.6.

11.12.2 The items subjected to the pneumatic leak tests may be admitted to such tests only if the results of the hydraulic tests for strength are successful.

11.12.3 Pneumatic leak tests shall be carried out by test pressure equal to the design pressure provided the following conditions are complied with:

.1 there are two verified and sealed pressure gauges;

.2 test shall be carried out by dry air or nitrogen with the steam saturation temperature not more than 45 °C;

.3 the temperature of water into which the items shall be completely immersed shall be not less than 12 °C for items of small volume and 12 °C for items of more than 0,1 m^3 in volume;

.4 no pumping-up during the time period when the item is exposed to the test pressure is permitted;

.5 the duration of the tests shall be not less than the stabilization time but not less than 15 min.

11.12.4 Heat exchangers and pressure vessels shall be considered to have passed the tests unless air or nitrogen leakage and pressure drop according to the pressure gauge during the tests are detected.

11.12.5 Testing of items without immersion due to large size or for other reasons shall be replaced with hermetic testing with the use of the connectors soap solution bubble test.

11.12.6 Where the refrigerating equipment is tested for leaks without being immersed into water, the duration of the tests shall be not less than 6 h, and in this case the total pressure drop during the tests due to adsorption and leak shall be not more than 1 per cent of the initial test pressure.

11.13 VACUUM-TIGHT TESTS

11.13.1 The control over the vacuum-tight tests of the freon refrigerating equipment operating at subatmospheric pressure shall be exercised by the Surveyor in accordance with Table 11.1.6 upon completion of the pneumatic leak tests.

11.13.2 Prior to tests, the items shall be dried. Thereupon they shall be vacuumized down to a residual pressure not exceeding 0,8 kPa.

11.13.3 The items shall be under vacuum during 6 h.

If the total pressure rise due to steam and gas desorption during the tests does not exceed 25 % of the initial residual pressure, the items shall be considered to have passed the tests.

Upon completion of the tests for tightness, gas conservation of the item shall be checked. Whilst so doing, positive pressure of the dry nitrogen, refrigerant or mixture thereof used for gas conservation of the interior spaces of the item shall be not less than 0,2 MPa at the ambient air temperature of 20 °C.

12 AUTOMATION EQUIPMENT

12.1 TERMS AND DEFINITIONS

12.1.1 Terms and definitions are given in Section 10 "Electrical equipment".

12.2 GENERAL

12.2.1 The provisions of this Sections apply during technical supervision of automation equipment listed in Section 15 "Automation" of the RS Nomenclature of items of technical supervision.

12.2.2 The Section contains the requirements of technical supervision of manufacture of the above mentioned items of technical supervision at the firm (manufacturer).

The technical instructions and test standards pertain equally to product prototypes, pilot specimens and products at steady production.

12.2.3 General regulations for technical supervision are specified in Part I "General Regulations for Technical Supervision", and for technical documentation – in Part II "Technical Documentation" and in 1.4 of this Part.

12.3 TECHNICAL DOCUMENTATION

12.3.1 The extent of technical documentation for the automation equipment to be submitted to the Register depending on the code of the Nomenclature is specified in Appendix 1.

Note. For the review of documentation, the manufacturer may refer to a checklist the form of which is specified in Appendix 3.

12.3.2 The codes of technical documentation applied in the Section are shown in Table 12.3.2-1.

Table 12.3.2-1

Code	Name	Description
C1	a set of documentation for programmable electronic systems	documentation for programmable electronic systems in compliance with Section 7, Part XV "Automation" of the Rules for the Classification and Construction of Sea-Going Ships
D1	assembly drawing	a document containing an assembly unit and other data necessary for its assembly (manufacture) and control
D2	general arrangement plan	a document specifying the product structure, interaction of its components and describing the product operation principle
D3	functional block diagram	a document specifying the basic functional components of the product, their purpose and interconnections
D4	circuit diagram	a document specifying the complete set of components and their interconnections and, as a rule, providing full (detailed) indication of the operation principles of the product (installation)
T1	specification	a document specifying the structure of assembly component, complex or set
T2	an explanatory note	a document containing a description of device and operation principle of the product being developed, as well as a substantiation of technical solutions accepted for its development
T3	technical specifications	a document containing the product requirements (combination of criteria, standards, rules and provisions), its manufacture, control, acceptance and delivery
T4	test program and test procedure	a document containing technical data to be checked during the product testing, as well as the sequence and procedure of their control
T5	failure mode and effects analysis (FMEA)	failure mode and effect analysis representing structured approach to potential failures that may occur during the operation of the product (installation). Recommendations for the failure mode and effects analysis are specified in Appendix 2
I1	explosion-proof certificate	a document verifying that this type of equipment complies with the particular standard for explosion protection and is specially intended for the use in the explosive environment

Where necessary, RS may require to submit additional technical documentation including the reliability information.

When reviewing the technical documentation, it is necessary to identify the compliance of the design and performance characteristics of the products with the requirements of the relevant parts of the Rules for the Classification and Construction of Sea-Going Ships, including shipboard service conditions.

12.4 SCOPE AND PROCEDURE FOR THE AUTOMATION EQUIPMENT SURVEY

12.4.1 Prior to the tests of the automation equipment, it is necessary to check the availability of:

.1 a set of the RS-approved technical documentation on the equipment to be tested;

.2 documents on related parts confirming supervision by the Register during the manufacture thereof in accordance with the RS Nomenclature;

.3 the RS-approved test program and procedure;

.4 documents (certificates, test reports, etc.) of competent authorities confirming positive results of special test types if they are stipulated in the test program;

.5 testing equipment, as required by test program and procedure, with necessary documents confirming the characteristics thereof, Recognition Certificate or Report for Testing Laboratory;

.6 measuring instruments having a relative measuring accuracy not exceeding 1,5 %;

.7 documents of the competent bodies confirming compliance of measuring instruments with declared accuracy.

12.4.2 During survey, the surveyor shall make sure that tests are carried out in accordance with the Register approved program following the test procedures set forth in the Section or other equivalent procedures.

12.4.3 Breaks are allowed during the performance of single types of tests or between them if these do not affect testing.

12.4.4 Tests of the prototypes of the automation systems (control, regulation, alarm and protection) shall be carried out at the firm (manufacturer) complete with the sensors and actuators or using the appropriate simulators. During the tests, the pneumatic components of the automation shall be mounted and interconnected as this will be provided in the automation units.

12.4.5 The remotely controlled fittings shall be generally tested complete with the extreme position signalling devices (especially during vibration-resistance and shock-resistance tests).

12.4.6 Regulators, sensors and signalling devices shall be generally tested on beds with real working media. Where it is not possible to conduct tests on beds with real working media, tests using the simulators are permitted.

12.4.7 Pneumatic and hydraulic pipelines of the automation systems shall be subjected to hydraulic tests to pressures according to Section 8. Tests of hydraulic and pneumatic components and devices for fail-safety at overloads shall be carried out in consistency with the Register approved technical documentation for the appropriate components and devices.

12.4.8 For the automation systems some tests other than the functional tests conducted previously on the components and devices being part of this systems or the tests of the systems itself conducted previously may be taken into account, provided that those tests have been conducted according to the standards not lower than the Register standards. Test results shall be confirmed by reports. Therewith, the manufacturer shall confirm the stability of structure, software and earlier declared technical parameters of material or product or changes in the structure do not result in changes of working process, load to the product components, service life or other essential parameters of the product.

12.4.9 Upon completion of the mechanical and environmental tests, any types of special tests and checks following which mechanical damages of individual components are likely to occur as well as when the normal operation during any tests is disturbed, the equipment shall be subjected to detailed examination and the possibility of further tests shall be determined.

12.4.10 The surveyor can reject survey or tests performance if an item is inadequately prepared for tests, and also when defects effecting the safety of survey or test performance are revealed.

12.4.11 If a product has failed to pass a certain kind of tests and, as the result, its design has been changed or improved, the tests shall be repeated in accordance with the test program. The scope of these tests shall be agreed with the Register.

12.4.12 The scope and types of tests of the automation equipment during the manufacture thereof are given in Appendix 1.

Note. To arrange the test process, the manufacturer may refer to a checklist the Form of which is specified in Appendix 4.

12.4.13 Programmable electronic system testing shall be in compliance with Section 7, Part XV "Automation" of the Rules for the Classification and Construction of Sea-Going Ships.

12.4.14 When the test results are satisfactory, the certificate of the appropriate form shall be issued in accordance with Part I "General Regulations for Technical Supervision".

12.4.15 When the term of validity is expired, the Type Approval Certificate (CTO) is renewed on request of the manufacturer in accordance with 6.8, Part I "General Regulations for Technical Supervision".

12.4.16 When the conditions of 6.8.1 are not met and the provisions of 6.8.2, Part I "General Regulations for Technical Supervision" are complied with, for renewal of CTO for the product manufactured under the established production conditions, the firm (manufacturer) shall perform tests according to the RS-approved program at least in the scope of serial products of steady production.

12.4.17 In case of changes to the design of automation equipment resulting in the changes working process, load to the product components, service life or other essential parameters of the product, or changes in software and earlier declared technical parameters of material or product, for endorsement of renewal of CTO the products shall be tested according to the RS-approved program taking into consideration the changes made.

12.5 INSTRUCTIONS ON TESTS AND CHECKS PERFORMANCE

12.5.1 The tests and checks shall be carried out on common specimens in sequence to be specified in test programs.

12.5.2 Irrespective of the sequence specified and need not be on the specimens being subjected to other types of tests, the following tests may be performed:

.1 for exposure to salt mist;

.2 for fungus resistance.

12.6 DESCRIPTION OF TESTS AND CHECKS

The complete list of tests and checks is given in Table 12.6.

Table 12.6

Code	Test
12.4.13	Programmable electronic system testing
12.6.1	Visual inspection
12.6.2	Insulation resistance measurement
12.6.3	Test for insulation electric strength
12.6.4	Functional tests
12.6.5	Vibration tests
12.6.6	Shock tests
12.6.7	Tests for resistance to motions and prolonged inclinations
12.6.8	Tests for heat stability
12.6.9	Tests for cold endurance
12.6.10	Damp heat tests
12.6.11	Tests for exposure to salt mist (corrosion resistance)
12.6.12	Protective enclosure testing
12.6.13	Test for rated power supply deviation
12.6.14	Test for tolerable levels of radiated electromagnetic emission
12.6.15	Test for resistance to external electromagnetic interference.
12.6.15.1	Resistance to conductive low frequency interference
12.6.15.2	Tests for resistance to conductive radio frequency interference
12.6.15.3	Test for resistance to nanosecond pulse interference due to fast transient processes in the circuits of the a.c. supply sources, signal and control circuits
12.6.15.4	Tests for resistance to microsecond pulse interference
12.6.15.5	Tests for electrostatic discharge resistance
12.6.15.6	Tests for resistance to electromagnetic field
12.6.16	Test for tolerable levels of radiated conductive interference
12.6.17	Flame retardant tests
12.6.18	Fungus resistance tests

12.6.1 Visual inspection.

The inspection shall be carried out to determine:

compliance of products with the approved technical documentation;

compliance of products with the requirements of the RS rules the performance of which is not specified in the approved technical documentation;

the readiness of the product to be tested;

the repairability of the automation systems and devices; the following shall be checked using the prototype or pilot specimen the possibility of replacement of the components (shall not be accompanied by complicated adjustments and fine adjustments) of the automation equipment. When checking the repairability, the availability of numbers, marking, tags and other indices designating the appropriate spare parts as well as their position in the automation system and in the diagrams shall be considered.

During the visual inspection (including openings-up and single disassemblies if needed), the following shall be checked:

assembly parts and materials used in the product;

quality of the product mounting;

structural design of the product;

strength of connecting and fastening units, welded, screwed and other structural and contact joints;

availability of anticorrosion coatings in the points subject to corrosion;

availability of necessary markings and inscriptions;

contact and protective terminations of cables and wires, connections of hydraulic and pneumatic pipelines;

arrangements ensuring electrical safety (protective earthing, interlocks, isolating coatings, etc.).

12.6.2 Insulation resistance measurement.

The measurement of insulation resistance is compulsory at the following stages of tests performance:

before and after electrical insulation strength tests;

before and after dry heat test;

before and after cold endurance test;

before and after damp heat test;

before and after the test for exposure to salt mist.

Insulation resistance shall be measured:

among all product parts intended for operation at the same voltage and connected together during measurements and any metallic product part within reach that can be touched (enclosure, handle, etc.);

among product parts being alive in operation and electrically not interconnected, between various windings.

among each insulated core of cable products and the other cores in any sequence and the metallic cable sheath (armor, screen), and in the absence of these latter, with an electrode in water wherein the cable product is being immersed.

Insulation resistance shall not be lower the values given in Table 12.6.2.

Table 12.6.2

Rated supply voltage, V	Test Voltage (D.C. voltage), V	Minimum permissible insulation resistance, MOhm	
		before test	after test
Un ≤ 65	2xUn, min. 24V	10	1,0
Un > 65	500	100	10

12.6.3 Test for insulation electric strength.

Before the tests commencement and after their completion the insulation resistance measurement of equipment shall be carried out under standard environmental conditions.

The test voltage shall be alternately applied between current-carrying parts of inconnected electrical circuits, as well as between current-carrying parts and the case of the product.

The semiconductor components of automation equipment that may be damaged under tests, may be disconnected during tests. During shutoff of the specified components the test voltage value shall be defined by the manufacturer with due regard to specifications of such components.

The electric insulation of the automation equipment shall stand up without any flashover, within 1 min, under normal environmental conditions, to the alternating sine voltage with a frequency of 50 or 60 Hz and with a value given below in Table 12.6.3:

Table 12.6.3

Nominal supply voltage, V	Test voltage (50 or 60 Hz), V
Un ≤ 65	2xUn + 500
66 — 250	1500
251 — 500	2000
501 — 690	2500

12.6.4 Functional tests.

Each sample at the firm (manufacturer) shall be subjected to functional tests. The tests shall be carried out under standard environmental conditions. Automation equipment shall be checked for functioning and proper performance under conditions specified by the technical documentation.

The following shall be checked during functional tests:

all characteristics for compliance with the requirements of the technical documentation (accuracy, speed of response or sluggishness, responsivity, dynamic and static output characteristics, etc.) and automation algorithms, that is the whole scope, procedure and sequence of the control, regulation, monitoring and protection functions fulfilled by the system or device;

automatic monitoring of the system state of health (if provided) by simulation of individual faults within the system, in sensors and test machinery by means of breaks, short-circuits, etc.;

protection against unauthorized alteration of threshold limit values of alarm and protection actuation;

effect of faults in particular system components, including short-circuits and breaks in the circuits of sensors, communication channels and actuators, on the operability of the particular channels and the system in general. In case of simulation of faults of the equipment, short-circuits and breaks in the particular circuits and communication channels, the operability of the adjacent circuits, particular channels and the system in general shall be maintained.

12.6.5 Vibration tests.

The tests are carried out in compliance with standard IEC 60068 2-6 (test F_c).

The tests are carried out for checking the capability of products to perform their functions and maintain the parameter values within the limits specified in documentation for the products and test programs in case of sinusoidal vibration in the specified test conditions.

The test shall be carried out under mechanical and (or) electrical loads, the type, parameters and control methods of which shall be specified in the documentation for the products and test programme.

For the check it is recommended to select parameters, the changing of which allows to consider the stability of the product in general (e.g., vibronoise level, distortion of output signal or changing its value, circuit continuity, instability of contact resistance, etc.).

The method of fastening of the equipment for tests shall be indicated in the technical documentation with due account of the possible positions of the equipment in service. If the technical documentation specifies different methods of fastening in service of equipment, the latter shall be tested using each method of fastening. If the technical documentation specifies different methods of fastening during operation of the equipment, it shall be tested using the method of fastening which is the most dangerous.

The tests shall be conducted in three mutually perpendicular directions in relation to the equipment within two cycles (the cycle means the continuous variation of frequency within the required range from the lowest to the highest and vice versa $f_1 \rightarrow f_2 \rightarrow f_1$,where f_1 and f_2 are the lowest and highest frequency range accordingly) in each direction. The speed variation rate shall be sufficient to check and record of the necessary parameters but not more than two octave per minute.

If the technical documentation specifies different methods of fastening during operation of the equipment, it shall be tested using the method of fastening which is the most dangerous.

The tests shall be carried out on regular shock-mounts, if any. Shock-mounted products shall be hard-mounted in tests for detecting resonance frequencies.

Categories of equipment according to vibration resistance depending on the operating conditions are given in Table 12.6.5.

Table 12.6.5

Category of equipment	Description
V1	Equipment operated under normal service conditions.
V2	The equipment operating under the conditions of increased vibration (e.g. the equipment to be installed directly on the internal combustion engines, air compressors, etc.)
V3	The equipment intended for operation under the conditions of increased vibration, e.g. in exhaust-gas receivers or diesel engine injection systems, etc.

For the equipment of category V1 the tests shall be carried out at the following vibration conditions:

within the frequency range of 2^{+3}_{-0} Hz — 13,2 Hz - amplitude ± 1 mm;

within the frequency range of 13,2 Hz — 100 Hz – acceleration ± 0,7*g*.

For the equipment of category V2 the tests shall be carried out at the following vibration conditions:

within the frequency range of 2^{+3}_{-0} Hz — 25 Hz - amplitude ± 1,6 mm;

within the frequency range of 25 Hz — 100 Hz – acceleration ± 4,0*g*.

For the equipment of V3 category the tests shall be carried out at the following vibration conditions:

within the frequency range of 40 Hz — 2000 Hz, acceleration ± 10,0*g* at the temperature of 600 °C, duration 90 min.

During the test, resonance frequencies, at which the performance characteristics of the equipment are impaired, are determined. The time of search shall be sufficient to reveal resonance.

When resonance frequencies are detected, the amplitude of which exceeds the normal one by two and more times, the tests shall be conducted on each resonance frequency during at least 90 min.

Where a number of resonant frequencies are detected close to each other, the test may be conducted during 120 min with smooth frequency variation within the detected range.

The test duration in case of no resonance condition is 90 min at 30 Hz.

The equipment shall be considered to have passed the tests, if in the process of vibration effect it retains its parameters within the prescribed limits and remains undamaged.

12.6.6 Shock tests.

The tests shall be carried out in compliance with standard IEC 60068-2-27 (test E_a).

The tests are carried out for checking the capability of products to perform their functions and maintain the parameter values within the limits specified in documentation for the products and test programs in case of multiple mechanical impacts in the specified test conditions.

The test shall be carried out under mechanical and (or) electrical load, the type, parameters and control methods of which shall be specified in the documentation for the products and test program.

For the check it is recommended to select parameters, the changing of which allows to consider the stability of the product in general (e.g., vibronoise level, distortion of output signal or changing its value, circuit continuity, instability of contact resistance, etc.).

The method of fastening the items for testing shall be indicated in the technical documentation with due account of the possible positions of the items in service.

The tests shall be carried out in operating condition under effect of shock load in each of the three mutually perpendicular directions in relation to the item, in turn. The items having axis of symmetry shall be tested shall be checked in two mutually perpendicular directions (along and perpendicularly to the axis of symmetry). If the technical documentation on the items specifies different methods of fastening in service, the item shall be tested using the most dangerous method of fastening.

The tests shall be carried out on regular shock-mounts, if any.

Categories of equipment according to shock resistance depending on the operating condition are given in Table 12.6.6-1.

Table 12.6.6-1

Category of equipment	Description
G0	The equipment intended for installation on berth-connected ships and fixed offshore platforms.
G3	The equipment not related to the category G0 intended for installation on floating offshore oil-and-gas production units, ships of no ice class or ships of **Ice1**, **Ice2**, **Ice3** ice classes.
G5	The equipment intended for installation on ships of ice classes **Arc4** — **Arc9**, **Icebreaker6** — **Icebreaker9**.

Form of the shock pulse, the acceleration value, shock duration, number of shocks in each position of the item for various categories of equipment are given in Table 12.6.6-2.

Table 12.6.6-2

Category of equipment	Form of the shock pulse	Acceleration, *g*	Shock duration, ms	Number of shocks in each position
G0	no tests required			
G3	half-sinusoid	3,0	6 or 30	100 ± 5
G5	half-sinusoid	5,0	6 or 30	100 ± 5

The equipment shall be considered to have passed the tests, if in the process of effect it retains its parameters within the prescribed limits and remains undamaged.

12.6.7 Tests for resistance to motions and prolonged inclinations.

The tests are carried out for checking the capability of products to perform their functions and maintain the parameter values within the limits specified in documentation for the products and test programs in case of motions and prolonged inclinations in the specified test conditions.

The test shall be carried out under mechanical and (or) electrical loads, the type, parameters and control methods of which shall be specified in the documentation for the products and test program.

The tests for resistance to static and dynamic inclination are normally not required for equipment without moving parts.

The tests shall be carried out on regular shock-mounts, if any.

Automation equipment shall stand the tests using the following procedure:

.1 installation of the equipment on bed, switching-on and measurement of parameters. Holding of the equipment under motions conditions when installed sequentially in two mutually perpendicular positions and measurements of parameters in each position, and whilst so doing:

limiting inclination angle: 22,5°;

motions period: 10 s;

test duration: at least 15 min in each position;

.2 conditioning of equipment sequentially in two mutually perpendicular positions at an angle of 22,5° to the horizontal and measurement of parameters during any period sufficient for measurement of parameters but at least 3 min in each position;

.3 removal of equipment from bed, measurement of parameters, switching-out and examination.

Note. On ships for the carriage of liquefied gases and chemicals, the emergency power supply is to remain operational with the ship flooded up to a maximum final athwart ship inclination of 30°.

The equipment shall be considered to have passed the tests, if in the process of effect it retains its parameters within the prescribed limits and remains undamaged.

12.6.8 Tests for heat stability.

The tests shall be carried out in compliance with standard IEC 60068-2-2 (test B).

For the equipment where heat dissipation is not provided by its structure, the tests shall be carried out according to test B_b. For the equipment where heat dissipation is provided by its structure (availability of heating units and/or cooling system), the tests shall be carried out according to test B_e.

Categories of equipment according to heat stability depending on the operating conditions are given in Table 12.6.8.

Table 12.6.8

Category of equipment	Description
TH1	Equipment not related to categories TH2 and TH3.
TH2	Components and devices intended for installation in switchboards, consoles or housing together with other heat-generating equipment.
TH3	The equipment for which higher operating temperatures are possible, for example, directly fitted to internal combustion engines, boilers, etc.

Test timing starts when the product to be tested reaches practically steady-state temperature at test temperature held in the heat chamber.

Prior to the tests commencement and after their end the insulation resistance measurement of equipment shall be carried out under standard environmental conditions.

For the equipment of category TH1 the tests shall be carried out at the following conditions:

temperature: +55 °C ±2 °C;

test duration: 16 h.

For the equipment of category TH2 the tests shall be carried out at the following conditions:

temperature: +70 °C ±2 °C;

test duration: 16 h.

For the equipment of category TH3 the tests shall be carried out at the following conditions:

temperature: 10 °C exceeding the working temperature or at +85 °C ± 2 °C, whichever is higher.

test duration: 16 h.

The equipment shall be operating during the complete test period and shall be tested together with cooling system in service, where provided. The functional test shall be carried out during the last hour at the test temperature.

The equipment shall be considered to have passed the tests, if in the process of effect it retains its parameters within the prescribed limits and remains undamaged.

12.6.9 Tests for cold endurance.

The tests shall be carried out in compliance with standard IEC 60068-2-1 (test A).

For the equipment where heat dissipation is not provided by its structure, the tests shall be carried out according to test Ab. For the equipment where heat dissipation is provided by its structure (availability of heating units and/or cooling system), the tests shall be carried out according to test Ad.

Test timing starts when the product to be tested reaches practically steady-state temperature at test temperature held in a cooling chamber.

Prior to the tests commencement and after their end the insulation resistance measurement of equipment shall be carried out under standard environmental conditions.

Categories of equipment according to cold endurance depending on the operating conditions are given in Table 12.6.9.

Table 12.6.9

Category of equipment	Description
TL1	The equipment intended for installation in heated spaces.
TL2	The equipment installed on the open deck or in unheated spaces
TL3(DAT)[1]	The equipment installed on the open deck or in unheated spaces of ships with the distinguishing mark **WINTERIZATION (DAT)** in the class notation
[1]Instead of **DAT**, the value of design ambient temperature shall be indicated in brackets	

For the equipment of category TL1 the tests shall be carried out at the following conditions:

temperature: +5 °C ± 3 °C;

test duration: 2 h.

For the equipment of category TL2 the tests shall be carried out at the following conditions:

temperature: - 25 °C ± 3 °C;

test duration: 2 h.

For the equipment of category TL3 (**DAT**) the tests shall be carried out at the following conditions:

temperature: 10°C below design ambient temperature (**DAT**), or at – 40 ± 3°C, whichever is lower;

test duration: 2 h.

The equipment shall be in inoperative condition operating during the complete testing period, expect for the functional test shall be carried out during the last hour at the test temperature.

Upon the completion of the trials, the functional tests shall be carried out under standard environmental conditions.

The equipment shall be considered to have passed the tests, if in the process of effect it retains its parameters within the prescribed limits and remains undamaged.

12.6.10 Damp heat tests.

The tests shall be carried out in compliance with standard IEC 60068-2-30 (test D_b).

Before and after the tests the insulation resistance measurement of equipment shall be carried out under standard environmental conditions.

The test shall start with +25 °C ± 3 °C and at least 95 % humidity.

The tests shall be carried out with +55 °C ±2 °C and at least 95 % humidity.

The duration of the tests shall include two cycles 2 x (12 h + 12 h).

The equipment shall be operating during the complete first cycle and switched off during the second cycle except for the functional test.

The functional tests shall be carried out during the first two hours of the first cycle at the test temperature and during the last two hours of the second cycle at the test temperature.

Duration of the second cycle can be extended due to more convenient handling of the functional test.

Insulation resistance measurements and performance test during 1 — 3 hours shall be carried out following removal from the cold chamber and recovery at standard atmosphere conditions.

The equipment of any design shall be tested in regular enclosures, except for the equipment having degree of protection against penetration of water being 4 (IPX4) and over, the covers of which during the tests in the chamber shall be open. The tests shall be conducted with the equipment being put periodically into operation.

The equipment shall be considered to have passed the tests, if in the process of effect it retains its parameters within the prescribed limits and remains undamaged.

12.6.11 Tests for exposure to salt mist (corrosion resistance).

The tests shall be carried out in compliance with standard IEC 60068-2-52, test K_b.

Categories of equipment according to corrosion resistance depending on the operating condition are given in Table 12.6.11.

Table 12.6.11

Category of equipment	Description
C0	The equipment intended for installation indoors.
C1	The equipment intended for installation on the open deck or in open spaces

Before and after the tests the insulation resistance measurement of equipment shall be carried out under standard environmental conditions.

Before the test, the initial functional test shall be performed. The equipment shall be operating during conditioning.

For the equipment of category C0 the tests for resistance to sea mist (corrosion resistance) are not required.

For the equipment of category C1 the tests shall be carried out in 4 cycles. Each cycle consists of the following stages:

salt solution atomization during 2 h;

storage of the equipment in the chamber during 7 days.

Functional tests of the equipment shall be carried out on the seventh day of each storage period.

Upon completion of the fourth test cycle after reinstatement (washing and drying of the sample) the insulation resistance shall be measured and the functional tests shall be carried out during 4 — 6 h.

Upon finalization of tests it is necessary to make sure that there is no evidence of corrosion or it is exclusively superficial.

The equipment shall be considered to have passed the tests, if during and after the tests it retains its parameters within the prescribed limits and remains undamaged.

12.6.12 Tests of enclosure protection.

Tests of enclosure protection against solid foreign matter and water intrusion shall be carried in compliance with standard IEC 60529.

Method of testing shall be selected taking into consideration the characteristics and operating conditions of the equipment. Substantiation of the testing method shall be specified in the test procedure.

It is allowed to perform tests of the enclosure with the installed and mounted components (cable entries, indicators, control components, ventilation components, etc.) on the external surfaces of the enclosure without the equipment located inside thereof. During the tests of the enclosure without the equipment inside thereof, the documentation for the product shall contain the information on the arrangement of dangerous parts inside the equipment enclosure or the

objects that may be damaged in case of penetration inward of foreign hard objects or ingress of water.

The enclosure shall comply with the protection degree that is designated by the first characteristic numeral, provided that it also complies with all lower degrees of protection designated by the first characteristic numeral. Therewith, no tests are required verifying the compliance with any lower protection degree, provided that these tests will be definitely carried out, where necessary.

The enclosure having the protection degree designated by the second characteristic numeral up to and including IPX6, also complies with all lower degrees of protection designated by the second characteristic numeral. Therewith, no tests are required verifying the compliance with any lower protection degree, provided that these tests will be definitely carried out, where necessary.

The enclosure having the protection degree designated by the second characteristic numeral IPX9 shall be considered as not applicable at the exposure to water jets (IPX5 or IPX6) and at water immersion (IPX7 or IPX8) and need not comply with the protection degrees IPX5, IPX6, IPX7 and IPX8. When the enclosure complies with several protection degrees indicated by the second characteristic numeral, the symbol shall apply as specified in Table 12.6.12.

Table 12.6.12

Enclosure passes test for:		Designation and marking	Range of application[1]
Water jets second characteristic numeral	Temporary/continuous immersion second characteristic numeral		
5	7	IPX5/IPX7	versatile
5	8	IPX5/IPX8	versatile
6	7	IPX6/IPX7	versatile
6	8	IPX6/IPX8	versatile
9	7	IPX7/IPX9	versatile
9	8	IPX8/IPX9	versatile
5 and 9	7	IPX5/IPX7/IPX9	versatile
5 and 9	8	IPX5/IPX8/IPX9	versatile
6 and 9	7	IPX6/IPX7/IPX9	versatile
6 and 9	8	IPX6/IPX8/IPX9	versatile
-	7	IPX7	restricted
-	8	IPX8	restricted
9	-	IPX9	restricted
5 and 9	-	IPX5/IPX9	versatile
6 and 9	-	IPX6/IPX9	versatile

[1]Enclosures for "versatile" application indicated in the last column shall meet requirements for exposure to both water jets and temporary or continuous immersion;
enclosures for "restricted" application are considered suitable only for the conditions to which they were tested.

12.6.13 Tests for of rated power supply deviation.

Voltage and frequency deviations from rated values during the tests of the electrical and electronic automation equipment shall comply with those given in Table 12.6.13-1.

Table 12.6.13-1

Combination	Voltage deviation permanent, %	Frequency deviation permanent, %
1	+6	+5
2	+6	-5
3	-10	+5
4	-10	-5
	voltage transient (1,5 s) , %	frequency transient (5 s) , %
5	+20	+10
6	-20	-10

D.C. voltage deviations from rated values during the tests of the electrical and electronic automation equipment shall comply with those given in Table 12.6.13-2.

Table 12.6.13-2

Parameter	Deviation from rated values, %
Voltage tolerance continuous	± 10
Voltage cyclic deviation	5
Voltage ripple	10

Categories of the equipment depending on type of power supply are given in Table 12.6.13- 3.

Table 12.6.13-3

Category of equipment	Description
P1	The equipment supplied from the battery connected to a charging battery.
P2	The equipment not connected to the battery during charging.

The equipment of category P1 shall be tested at the continuous voltage tolerance within the range + 30 % to -25 %.

The equipment of category P2 shall be tested at the continuous voltage tolerance the range + 20 % to - 25 %.

Thrice-repeated interruption of the power supply for 30 s within 5 min shall not affect the proper performance of the automation equipment. The time of 5 min may be exceeded if the equipment under test needs a longer time for start up, e.g. booting sequence, the total time of tests for power supply interruption may exceed 5 min.

For equipment which requires booting, one additional power supply interruption during booting shall be performed.

During the tests, the equipment behavior shall be checked at supply failure and resumption, as well as possible fault of software or data stored in the memory of programmable electronic systems, where applicable.

The pneumatic and hydraulic components and devices shall be tested at fluctuations of the working medium ±20 % from the rated value during 15 min.

12.6.14 Tests for the level of radiated electromagnetic emission.

The tests shall be carried out in accordance with standards CISPR 16-2-3 and IEC 60945 for the frequency range of 156 — 165 MHz.

During tests, the equipment shall operate under normal test conditions, and the setting of controls affecting the level of emissions shall be varied in order to ascertain the maximum emission level. If the equipment has more than one energized state, the state which produces the maximum emission level shall be ascertained, and full measurements for that state shall be made.

Categories of equipment according to electromagnetic compatibility depending on the operating conditions are given in Table 12.6.14.

Table 12.6.14

Category of equipment	Description
E1	Equipment installed on the open deck and navigation bridge
E2	Equipment installed in enclosed machinery and other enclosed spaces of the ship.

For the equipment of category E1, the levels of radiated electromagnetic emission at a distance of 3 m shall not exceed the following values within the frequency ranges stated below:

0,15 — 0,3 MHz - 80 — 52 dBμV/m;

0,3 — 30 MHz- 52 — 34 dBμV/m;

30 — 1000 MHz - 54 dBμV/m;

1000 — 6000 MHz - 54 dBμV/m;

except for the range 156 — 165 MHz where 24 dBμV/m shall be established.

Alternatively, the radiation limit at a distance of 3 m from the enclosure port over the frequency in the range from 156 to 165 MHz shall be 30 dBμV/m peak.

For the equipment of category E2, the levels of radiated electromagnetic emission at a distance of 3 m shall not exceed the following values within the frequency ranges stated below:

0,15 — 30 MHz - 80 — 50 dBμV/m;

30 MHz — 100 MHz - 60 — 54 dBμV/m;

100 — 1000 MHz - 54 dBμV/m;

1000 — 6000 MHz - 54 dBμV/m;

except for the range from 156 to165 MHz where 24 dBμV/m shall be established.

The transmission bandwidth of the receiver for the frequency range from 0,15 to 30 MHz and from 156 to 165 MHz shall be 9 kHz and in the frequency range from 30 to 156 MHz and from 165 MHz to 1 GHz – 120 kHz.

The equipment to be tested shall be presented in full set with all the cables connecting devices and installed in the normal working position.

If the equipment to be tested consists of several units, the connecting cables between the basic and all other units shall have a maximum length stated in the firm's (manufacturer's) specification. The existing inlets and outlets of the equipment to be tested shall be connected to the equivalents of usually used auxiliary equipment with the use of cables of maximum length specified by the firm (manufacturer).

The surplus length of the cables shall be coiled and located at 30 – 40 cm (horizontally) from the connectors to which they are hooked up. If this is impracticable, the positioning of the surplus length of the cables shall meet the stated requirements as close as possible.

The measuring antenna shall be located at a distance of 3 m from the equipment to be tested. To determine the maximum interference level the antenna which measures the electric field strength shall be adjusted in the vertical extent only and be capable of rotating to obtain horizontal and vertical polarization or for rotation of the equipment itself located in the orthogonal plane of the antenna at its middle point level.

The wireless equipment (wi-fi router, etc.) may be exempted from limit, within its communication frequency range.

12.6.15 Test for resistance to external electromagnetic interference.

When conducting these tests, the equipment shall be presented in its normal working set and operate under normal conditions.

During the tests for the resistance to external electromagnetic interference the results shall be assessed against the functioning (performance) criteria related to the working conditions and functional purpose of the equipment being tested. These criteria shall be defined as follows:

functioning criterion A: the equipment being tested shall continue to operate for its designed purpose during and after the tests. No degradation of performance or loss of functions specified in the appropriate standard for equipment and technical documentation of the manufacturer shall be allowed;

functioning criterion B: the equipment being tested shall continue to operate for its designed purpose during and after the tests. No degradation of performance or loss of functions specified in the appropriate standard for equipment and technical documentation of the manufacturer shall be allowed. Nevertheless, degradation or loss of functions or performance which can be self-restored may be allowed during the tests, but no change in the mode set or operational data shall be allowed;

functioning criterion C: temporary degradation or loss of function or performance shall be allowed during the tests. Along with that, the self-restoring function is ensured or restoration of the disturbed function or performance may be provided in the end of the tests through the use of adjustments in accordance with the standard for equipment and technical documentation of the firm (manufacturer).

12.6.15.1 Resistance to conductive low frequency interference.

These tests simulate effect of the interference generated, for example, by electronic consumers (thyristors, etc.) and introduced in the power supply circuits in the form of harmonic components. These tests shall not be applied to the equipment supplied solely by accumulators.

The equipment shall remain operable (functioning criterion A) when additional test voltages are imposed on its supply voltage:

for the electrical equipment supplied by direct current:

frequency range: from 50 Hz to 10 kHz;

test voltage (effective value): 10 % of the nominal supply voltage;

test signal maximum power – 2 W;

for the electrical equipment supplied by alternating current:

the frequency range from the rated supply voltage frequency to the 200-th harmonic;

test voltage (effective value): 10 % from the rated supply voltage frequency to the 15-th harmonic; reducing from 10 % to 1 % in the range from the 15-th to 100-th harmonic; 1 % in the range from the 100-th harmonic to 200-th harmonic;

test signal maximum power – 2 W, minimum value of test voltage effective value - 3 V. The specified value of test voltage may be reduced in case the maximum power exceeds.

12.6.15.2 Tests for resistance to conducted radio frequency interference.

The tests shall be carried out in compliance with standard IEC 61000-4-6.

During the tests, the radio frequency voltages are generated, which arise in the power supply, control and signalling circuits due to operation of the electric power converters, echo sounders, shipboard radio transmitters on frequencies below 80 MHz.

The tests shall be carried out with the use of a generator connected sequentially to each coupler and decoupler. The unused input terminals of the couplers and decouplers used for connection of the test generator shall be loaded by an equivalent with noninductive impedance equal to the characteristic impedance of the cable. The test generator shall be tuned for each circuit design of the coupler and decoupler; whilst so doing, the additional and tested equipment shall be disconnected and replaced by a noninductive resistors of suitable ratings (when the cable impedance is 50 Ohm additional resistances shall be 150 Ohm). The test generator shall be tuned in such a way as to provide a non-modulated voltage of the required level at the input terminals of the equipment being tested.

The equipment shall remain operable (functioning criterion A) at the following levels of the test signal:

for the equipment of E2 category (refer to Table 12.6.14), the effective voltage value: 3 V at the frequency varying in the range from 150 kHz to 80 MHz. For the equipment of E1 category (refer to Table 12.6.14), the effective voltage value shall be increased up to 10V at points with frequencies: 2 MHz, 3 MHz, 4 MHz, 6,2 MHz, 8,2 MHz, 12,6 MHz, 16,5 MHz,18,8 MHz, 22 MHz and 25 MHz.

The frequency variation rate: ≤1,5 x 10^{-3} decade/s (or 1 % / 3 s);

modulation depth: 80 %;

modulation frequency 1000 Hz.

N o t e . At the modulation frequency of the input signal being 1000 Hz the modulation frequency of the interference signal may be chosen to be 400 Hz.

12.6.15.3 Test for resistance to nanosecond pulse interference due to burst electrical fast transient in the AC supply lines, signal, data and control circuits.

The tests shall be carried out in compliance with standard IEC 61000-4-4.

During these tests, the fast low-energy transient processes generated by the equipment the switching on of which is accompanied by sparking at contacts shall be simulated.

The equipment shall remain operable (operability criterion B) if pulse voltage with the following parameters is applied to the inlets of the supply sources:

pulse rise time: 5 ns (between 10 % and 90 % amplitude level);

duration of unit pulse: 50 ns (at 50 % value);

amplitude: 2kV – when applied to the supply circuits relative to the casing;

amplitude: 1 kV – when applied to the signal, control and communication supply circuits;

unit pulse recurrence frequency: 5 kHz or 100 kHz (pulse recurrence frequency 5 kHz is more applicable during the tests, nevertheless, frequency 100 kHz is more realistic. The equipment manufacturer shall define the recurrence frequency for the particular product);

pulse burst duration: 15 ms;

burst recurrence period: 300 ms;

duration: 5 min for each positive and negative pulse polarity.

12.6.15.4 Tests for resistance to microsecond pulse interference (Surge).

The tests shall be carried out in compliance with standard IEC 61000-4-5.

These tests simulate effects of the pulse voltages induced by switching "ON" or "OFF" high power inductive consumers.

The equipment shall retain its performance (performance criterion B), when pulses of the following characteristics are applied to its power lines:

pulse rise time: 1,2 μs (front time);

pulse duration: 50 μs (time to half value));

amplitude (peak): 1 kV line/earth;

amplitude: 0,5 kV line/line;

recurrence frequency: ≥ 1 pulse/min;

pulse number: 5 pulses for each positive and negative pulse polarity.

Short circuit current:

pulse rise time: 8 μs (front time);

pulse width: 20 μs (time to half value);

repetition rate: ≥ 1 pulse/min;

No. of pulses: 5 per polarity.

12.6.15.5 Tests for electrostatic discharge resistance.

The tests shall be carried out in compliance with standard IEC 61000-4-2.

During these tests the discharges of the static electricity are simulated which can arise when persons touch the appliance.

The discharges from the generator shall be applied to those points and surfaces that could normally be reached by the operator. In testing the preferable method is the contact discharge. If use of the contact method is impossible (where painted surfaces are available) air discharge shall be used.

The equipment shall continue to operate as intended after the tests (performance criterion B), at the following parameters of electrostatic discharges:

amplitude: 6 kV — for contact discharge,

amplitude: 2 kV, 4 kV and 8 kV — for air discharge;

Number of pulses: 10 per polarity.

If voltage test is satisfactory of 8 kV for air discharge, air discharge voltage tests of 2 kV and 4 kV may not be carried out.

12.6.15.6 Tests for resistance to electromagnetic field.

The tests shall be carried out in compliance with standard IEC 61000-4-3.

During these tests electromagnetic fields radiated by different transmitters are simulated as may occur when persons touch the appliance, e.g. shipboard fixed and portable VHF radio sets adjacent to the equipment operate on frequencies over 80 MHz.

The equipment shall remain operable (performance criterion A) at the following parameters of the electromagnetic field:

frequency range: 80 MHz to 6 GHz;

frequency sweep rate: $\leq 1{,}5 \times 10^{-3}$ decade/s (or 1 % / 3 s);

field strength: 10 V/m;

modulation depth: 80 %;

modulation frequency: 1000 Hz.

N o t e . When the modulation frequency of the input signal of the equipment being tested is 1000 Hz, the modulation frequency of the interference signal may be chosen to be 400 Hz.

If an equipment is intended to receive radio signals for the purpose of radio communication (e.g. wi-fi router, remote radio controller), then the immunity limits at its communication frequency do not apply.

12.6.16 Test for tolerable levels of radiated conductive interference

The tests shall be carried out in compliance with standard CISPR 16-2-1.

For the equipment of category E1 (refer to Table 12.6.14), the levels of the caused interference in the supply circuits and input-output circuits shall not exceed the following values within the frequency ranges stated below:

10 — 150 kHz - 96 — 50 dBμV;

150 — 350kHz - 60 — 50 dBμV;

350 kHz — 30 MHz - 50 dBμV;

For the equipment of category E2 (refer to Table 12.6.14), the levels of caused interference in the supply circuits and input-output circuits shall not exceed the following values within the frequency ranges stated below:

10 — 150 kHz - 120 — 69 dBμV;

150 — 500 kHz - 79 dBμV;

500 kHz — 30 MHz - 73 dBμV.

The transmission bandwidth of the receiver when measurements are made in the frequency range from 10 kHz to 150 kHz shall be 200 Hz and in the frequency range from 150 kHz to 30 MHz – 9 kHz.

The connecting cables between the electric power supply terminals of the tested equipment and the artificial mains network shall be screened and not exceed 0,8 m in length. If the tested equipment consists of several units with separate terminals for alternating and direct current, the power supply terminals with similar voltage rating may be connected in parallel.

When making measurements, all the measuring instruments and the equipment being tested shall be installed on an earthed plane and connected thereto. Where the use of an earthed plane is impossible, an artificial earthing shall be carried out by connecting to a metal frame or casing of the equipment being tested.

12.6.17 Flame retardant tests.

The tests shall be carried out in compliance with standards IEC 60695-11-5.

The part of the product enclosure shall be tested that most likely is liable to flame during the normal operation or at fault.

The tests shall be carried out under the following conditions:

flame applications: 5 times 15 s each;

interval between each application: 15 s or 1 time 30 s at once.

The test is performed with the equipment or housing of the equipment shall be tested.

Criteria of assessment of the test results:

the burnt-out or damaged part of the specimen by not more than 60 mm long;

no flame, no incandescence or - in the event of a flame or incandescence being present, it shall extinguish itself within 30 s of the removal of the needle flame without full combustion of the test specimen;

any dripping material shall extinguish itself in such a way as not to ignite a wrapping tissue. The drip height is 200 mm ± 5 mm.

For the one-off products or single shipment of products, for which no CTO is required, it is allowed not to perform flame retardant tests, and the manufacturer shall confirm (submit the appropriate certificates for materials of the product or the manufacturer written statement of compliance) compliance of the product with the requirements for flame retardant.

12.6.18 Fungus resistance tests.

The tests shall be carried out in compliance with standard IEC 60068-2-10 (test J), test variant 2.

The products installed in wet spaces, except for those in the insulated enclosure, where fungus-proof coatings were applied, shall be subject to fungus resistance.

Electrical parameters and functioning of the product shall be checked prior to tests.

The equipment is considered to have passed the test if, resulting the inspection by the unaided eye, no noticeable growth of mold is revealed or single germinating spores only

are seen on them with a 50X magnifying glass, and no changes in physical and mechanical properties of the specimen were detected, and the equipment is in operable conditio

APPENDIX 1

EXTENT OF TECHNICAL DOCUMENTATION TO BE SUBMITTED TO RS AND THE SCOPE OF TESTS TO BE CONDUCTED

Table 1

Code of item of technical supervision	Item of technical supervision	Prototype of test specimen, product of stable production, in case of CTO (Form 6.8.3) or C (Form 6.5.30) issuing when CTO is missing		Product of stable production in case of C (Form 6.5.30) issuing when CTO is available	
		list of documentation	list of tests	list of documentation[1]	list of tests[2]
1	2	3	4	5	6
15000000	AUTOMATION				
15010000	Integrated control system of technical means Integrated Marine Automation Systems	C1, T1—T4, T5[4], D3, I1[5]	12.4.13, 12.6.1, 12.6.2[3],12.6.3[3], 12.6.4, 12.6.5[3], 12.6.6[3,6], (12.6.7—12.6.16)[3]	C1, T1—T4, T5[4], D3, I1[5]	12.4.13, 12.6.1, 12.6.2, 12.6.4
15020000	Centralized alarm and monitoring systems including computer-based systems	C1[7], T1—T4, D3, I1[5]	12.4.13[7], 12.6.1, 12.6.2[3],12.6.3[3], 12.6.4, 12.6.5[3], 12.6.6[3,6], (12.6.7—12.6.16)[3]	C1[7], T1—T4, D3, I1[5]	12.4.13[7], 12.6.1, 12.6.2, 12.6.4
15030000	Remote control systems:				
15030100	Remote control systems of main internal combustion engines/ICE	C1[7], T1—T4, D3, I1[5]	12.4.13[7], 12.6.1, 12.6.2[3],12.6.3[3], 12.6.4, 12.6.5[3], 12.6.6[3,6], (12.6.7—12.6.16)[3]	C1[7], T1—T4, D3, I1[5]	12.4.13[7], 12.6.1, 12.6.2, 12.6.4
15030200	Remote control systems of main machinery with CPP	ditto	ditto	ditto	ditto
15030300	Remote control systems of main steam turbine installations	ditto	ditto	ditto	ditto

Code of item of technical supervision	Item of technical supervision	Prototype of test specimen, product of stable production, in case of CTO (Form 6.8.3) or C (Form 6.5.30) issuing when CTO is missing		Product of stable production in case of C (Form 6.5.30) issuing when CTO is available	
		list of documentation	list of tests	list of documentation[1]	list of tests[2]
1	2	3	4	5	6
15030400	Remote control systems of azimuth propulsion thrusters	ditto	ditto	ditto	ditto
15030500	Control systems of ship and MODU dynamic positioning systems	C1[7], T1—T4, T5[4], D3, I1[5]	12.4.13[7], 12.6.1, 12.6.2[3],12.6.3[3], 12.6.4, 12.6.5[3], 12.6.6[3,6], (12.6.7—12.6.16)[3]	-	-
15030510	computer systems, their software and interfaces intended for automated control of propulsion machinery with the use of one control (joystick) or several controls	ditto	ditto	C1[7], T1—T4, T5[4], D3, I1[5]	12.4.13[7], 12.6.1, 12.6.2, 12.6.4
15030520	operator panel system with controls and data display units	C1[7], T1—T4, D2, D3, I1[5]	12.4.13[7], 12.6.1, 12.6.2[3],12.6.3[3], 12.6.4, 12.6.5[3], 12.6.6[3,6], (12.6.7—12.6.16)[3]	C1[7], T1—T4, D2, D3, I1[5]	12.4.13[7], 12.6.1, 12.6.2, 12.6.4
15030530	position reference systems	C1[7], T1—T4, D3, I1[5]	12.4.13[7], 12.6.1, 12.6.2[3],12.6.3[3], 12.6.4, 12.6.5[3], 12.6.6[3,6], (12.6.7—12.6.16)[3]	-	-
15030600	remote automated control systems of electrical propulsion plants with podded azimuth thrusters	C1[7], T1—T5, D3, I1[5]	12.4.13[7], 12.6.1, 12.6.2[3],12.6.3[3], 12.6.4, 12.6.5[3], 12.6.6[3,6], (12.6.7—12.6.16)[3]	C1[7], T1—T5, D3, I1[5]	12.4.13[7], 12.6.1, 12.6.2, 12.6.4
15030700	automated control systems of self-elevating MODU	C1[7], T1—T4, D3, I1[5]	12.4.13[7], 12.6.1, 12.6.2[3],12.6.3[3], 12.6.4, 12.6.5[3], 12.6.6[3,6], (12.6.7—12.6.16)[3]	C1[7], T1—T4, D3, I1[5]	12.4.13[7], 12.6.1, 12.6.2, 12.6.4

Code of item of technical supervision	Item of technical supervision	Prototype of test specimen, product of stable production, in case of CTO (Form 6.8.3) or C (Form 6.5.30) issuing when CTO is missing		Product of stable production in case of C (Form 6.5.30) issuing when CTO is available	
		list of documentation	list of tests	list of documentation[1]	list of tests[2]
1	2	3	4	5	6
15030800	remote automated control system of ballast systems of column-stabilized MODU	ditto	ditto	ditto	ditto
15030900	remote automated control systems of azimuth and tunnel thrusters	T1-T4, D3, I1[5]	12.6.1, 12.6.2[3],12.6.3[3], 12.6.4, 12.6.5[3], 12.6.6[3,6], (12.6.7—12.6.16)[3]	T1—T4, D3, I1[5]	12.6.1, 12.6.2, 12.6.4
15031000	remote control and automated hull stabilization systems of high-speed craft	C1[7], T1-T4, D3, I1[5]	12.4.13[7], 12.6.1, 12.6.2[3],12.6.3[3], 12.6.4, 12.6.5[3], 12.6.6[3,6], (12.6.7-12.6.16)[3]	C1[7], T1-T4, D3, I1[5]	12.4.13[7], 12.6.1, 12.6.2, 12.6.4
15040000	Control systems of electric power plants:				
15040100	remote automated starting and stopping systems of diesel generator sets	C1[7], T1-T4, D3, I1[5]	12.4.13[7], 12.6.1, 12.6.2[3],12.6.3[3], 12.6.4, 12.6.5[3], 12.6.6[3,6], (12.6.7—12.6.16)[3]	C1[7], T1-T4, D3, I1[5]	12.4.13[7], 12.6.1, 12.6.2, 12.6.4
15040200	remote automated starting and stopping systems of turbo generator sets	ditto	ditto	ditto	ditto
15040300	remote automated starting and stopping systems of shaft generator sets (where coupling control system is provided)	ditto	ditto	ditto	ditto
15040400	remote automated control systems of ship electric power plants	ditto	ditto	ditto	ditto
15050000	Control systems of boiler installations:				

Code of item of technical supervision	Item of technical supervision	Prototype of test specimen, product of stable production, in case of CTO (Form 6.8.3) or C (Form 6.5.30) issuing when CTO is missing		Product of stable production in case of C (Form 6.5.30) issuing when CTO is available	
		list of documentation	list of tests	list of documentation[1]	list of tests[2]
1	2	3	4	5	6
15050100	automated control systems of main boiler installations	C1[7], T1—T4, D3, I1[5]	12.4.13[7], 12.6.1, 12.6.2[3],12.6.3[3], 12.6.4, 12.6.5[3], 12.6.6[3,6], (12.6.7—12.6.16)[3]	C1[7], T1—T4, D3, I1[5]	12.4.13[7], 12.6.1, 12.6.2, 12.6.4
15050200	remote automated control systems of auxiliary boiler installations auxiliary boiler installations	T1—T4, D3, I1[5]	12.6.1, 12.6.2[3],12.6.3[3], 12.6.4, 12.6.5[3], 12.6.6[3,6], (12.6.7—12.6.16)[3]	T1—T4, D3, I1[5]	12.6.1, 12.6.2, 12.6.4
15050300	remote automated control systems of of exhaust gas boiler installations	ditto	ditto	ditto	ditto
15050400	remote automated control systems of hot water boiler installations	ditto	ditto	ditto	ditto
15060000	Control systems of auxiliary machinery:				
15060100	remote automated control systems of compressors	T1—T4, D3, I1[5]	12.6.1, 12.6.2[3],12.6.3[3], 12.6.4, 12.6.5[3], 12.6.6[3,6], (12.6.7—12.6.16)[3]	T1—T4, D3, I1[5]	12.6.1, 12.6.2, 12.6.4
15060200	remote automated control systems of separators	ditto	ditto	ditto	ditto
15060300	remote automated control systems of filters	ditto	ditto	ditto	ditto
15060400	remote automated control systems of pumps (oil, fuel, cooling, etc.)	ditto	ditto	ditto	ditto
15060500	remote automated control systems of	C1[7], T1—T4, D3, I1[5]	12.4.13[7], 12.6.1, 12.6.2[3],12.6.3[3], 12.6.4, 12.6.5[3], 12.6.6[3,6],	C1[7], T1—T4, D3, I1[5]	12.4.13[7], 12.6.1, 12.6.2, 12.6.4

Code of item of technical supervision	Item of technical supervision	Prototype of test specimen, product of stable production, in case of CTO (Form 6.8.3) or C (Form 6.5.30) issuing when CTO is missing		Product of stable production in case of C (Form 6.5.30) issuing when CTO is available	
		list of documentation	list of tests	list of documentation[1]	list of tests[2]
1	2	3	4	5	6
	fuel preparation (temperature, viscosity)		(12.6.7—12.6.16)[3]		
15070000	Remote control of ships systems and remote level gauges:				
15070100	remote control systems of ballast and bilge system (together with remote controlled valves)	C1[7], T1—T4, D3, I1[5]	12.4.13[7], 12.6.1, 12.6.2[3],12.6.3[3], 12.6.4, 12.6.5[3], 12.6.6[3,6], (12.6.7—12.6.16)[3]	C1[7], T1-T4, D3, I1[5]	12.4.13[7], 12.6.1, 12.6.2, 12.6.4
15070200	remote control systems of heel and trim systems	ditto	ditto	ditto	ditto
15070300	remote control systems of cargo piping systems of oil tankers	ditto	ditto	ditto	ditto
15070400	remote control systems of cargo piping systems of liquid gas carriers	ditto	ditto	ditto	ditto
15070500	remote control systems of ships carrying dangerous chemicals in bulk	ditto	ditto	ditto	ditto
15080000	Automation systems of deck machinery	T1—T4, D3, I1[5]	12.6.1, 12.6.2[3],12.6.3[3], 12.6.4, 12.6.5[3], 12.6.6[3,6], (12.6.7—12.6.16)[3]	T1—T4, D3, I1[5]	12.6.1, 12.6.2, 12.6.4
15090000	Devices:				
15090100	automation devices as part of control systems listed in codes 15010000 to 15080000	T1—T4, D2, D3, I1[5]	12.6.1 — 12.6.5, 12.6.6[6], 12.6.7—12.6.17	-	-
15090500	oil mist detectors in crankcases of internal combustion engines (as well as internal combustion engines bearing temperature	ditto	ditto	T1—T4, D2, D3, I1[5]	12.6.1, 12.6.2, 12.6.4

Code of item of technical supervision	Item of technical supervision	Prototype of test specimen, product of stable production, in case of CTO (Form 6.8.3) or C (Form 6.5.30) issuing when CTO is missing		Product of stable production in case of C (Form 6.5.30) issuing when CTO is available	
		list of documentation	list of tests	list of documentation[1]	list of tests[2]
1	2	3	4	5	6
	monitors or equivalent devices for the prevention of explosion in the crankcase) explosion in the crankcase)				
15090600	ships computers and programmable logic controllers (PLC) electronic devices	ditto	ditto	-	-
15090700	electronic devices of operation of internal combustion engines	T1—T4, D2, D3, I1[5]	12.6.1 — 12.6.5, 12.6.6[6], 12.6.7—12.6.17	-	-
15100000	Indirect action controllers of:				
15100101	level	T1—T4, D2, D3, I1[5]	12.6.1 — 12.6.5, 12.6.6[4], 12.6.7—12.6.17	-	-
15100102	pressure	ditto	ditto	-	-
15100103	temperature	ditto	ditto	-	-
15100104	viscosity	ditto	ditto	-	-
15100105	speed	ditto	ditto	-	-
15110000	Sensors and indicators of:				
15110101	level	T1—T4, D2, D3, I1[5]	12.6.1 — 12.6.5, 12.6.6[6], 12.6.7—12.6.17	-	-
15110102	pressure	ditto	ditto	-	-
15110103	temperature	ditto	ditto	-	-
15110104	flow	ditto	ditto	-	-
15110105	salinity	ditto	ditto	-	-
15110106	vibration	ditto	ditto	-	-
15110107	position	ditto	ditto	-	-
15110108	sensors of position ship and external force sensors	ditto	ditto	-	-

Code of item of technical supervision	Item of technical supervision	Prototype of test specimen, product of stable production, in case of CTO (Form 6.8.3) or C (Form 6.5.30) issuing when CTO is missing		Product of stable production in case of C (Form 6.5.30) issuing when CTO is available	
		list of documentation	list of tests	list of documentation[1]	list of tests[2]
1	2	3	4	5	6
15110110	gas concentration	ditto	ditto	-	-
15119999	other	-	-	-	-
15120000	Panels, switchboards and other enclosures for automation systems	-	-	-	-
15130000	Remote-reading measuring devices, instruments	-	-	-	-
15130100	Equipment diagnostic facilities	-	-	-	-

[1] when CTO for the products is available and no changes to the equipment structure are made, the repeated review and approval of technical documentation are not required;
[2] when CTO for the products is available and no changes to the equipment structure are made, the repeated tests in the scope of the prototype/test specimen is not required, except for 12.6.1, 12.6.2, 12.6.4;
[3] tests shall be carried out for each component of the system;
[4] for the integrated systems of gas carriers and dynamic positioning systems of classes 2 and 3;
[5] for the equipment to be installed in the explosive area;
[6] shall be carried out for the equipment taking into consideration the operating conditions in accordance with Table 12.6.6-1;
[7] when programmable logic controllers are used in the system.
"-" means "not applicable".

APPENDIX 2

RECOMMENDATIONS FOR THE FAILURE MODE AND EFFECTS ANALYSIS (FMEA) PROCESS

1 GENERAL

1.1. Introduction

For conducting of the failure mode and effects analysis (FMEA) of dynamic positioning control systems, internal combustion engine (ICE) control systems and may also be applied to other programmable electronic systems.

1.2. Objectives

The primary objective of an FMEA is to provide a comprehensive, systematic and documented analysis, which establishes the important failure conditions and assesses their significance with regard to acceptable safety and performance criteria. One of the objectives of an FMEA is to demonstrate that single failure in the control system will not result in the working parameters out-of-limits established by the performance criteria of operation related to the consideration of only one component failure mode at a time, i.e. no combination of failure modes; however, it considers the possibility of common-cause failures. The single fault means the only one component failure mode at a time, i.e. no combination of failure modes. However, it considers the possibility of common-cause failures.

General acceptable performance and safety criteria for the engine, as well as criteria specific to the particular application (refer to 2.1.1 for ICE), shall be stated in the FMEA report and all identified failure modes evaluated against these criteria. This Appendix contains the recommendations for the FMEA process and the technical documentation to be submitted. The FMEA process and procedure is comprehensively documented in the appropriate normative documents (standards), such as the International Code of Safety for High-Speed Craft / HSC-Code, Annex 3 and Annex 4 and International Marine Contractors Association / IMCA M 166.

1.3. System FMEA

The control system FMEA shall be performed as a system FMEA.

A system FMEA is carried out in a top-down manner, i.e. it starts from the overall system level and progresses to the next level down, or subsystem level, and further down to the equipment item or component level. If it can be justifiably shown that at a certain level there is no further effect on the overall system if a failure occurs, then it is not necessary to continue to the next level down. In this case, it would not be necessary to continue to analyze all of the system levels down to component level.

The FMEA for diesel engine control systems shall be based on a single-failure concept under which a subsystem or equipment item at various levels of the system's functional hierarchy is assumed to fail by one probable cause (initiating event) at a time. The effects of the postulated failure are analyzed and classified according to their severity. Any failure mode which may cause an effect on the system beyond previously agreed acceptance criteria shall be mitigated by measures such as system or equipment redundancy. An exception is a "hidden failure" in which a second failure must occur in order to expose the "hidden failure". A "hidden failure" is a special case because the failure effects are not apparent under normal circumstances (for example, it may be a failure of protective relay with normally open contacts).

A test program of selected items shall be drawn up to verify the assumptions and confirm the conclusions made in the FMEA.

1.4. Definitions and explanations

In the Appendix, the definitions given in Table 1.4 apply.

Table 1.4

Term	Definition
CCF, Common Cause Failure.	Failures of different items, resulting from a single event, where these failures are not consequences of each other.
Automation component, component	The definition of the automation component is given in 1.2, Part XV "Automation" of the Rules for the Classification and Construction of Sea-Going Ships. In the context of control systems e.g. a sensor, a relay, a logic component, etc.
Automation device, the device	The definition of the automation device is given in 1.2, Part XV "Automation" of the Rules for the Classification and Construction of Sea-Going Ships.
Design intent	A detailed explanation of the ideas, concepts, and criteria that are defined by the designer to be important. Typically included: system requirements; design conditions; system limitations.
Essential services	Equipment and systems necessary for the design intent and safe operation of the control item (e.g. for ICE - fuel oil, lubrication, cooling water supply, etc.)
Failure	Termination of the ability of an item or component to perform a required function under stated conditions.
Failure effect	Immediate consequences of a failure on operation, function or functionality, operability status of some item or component.
Failure mode	The specific manner or way by which a failure occurs in terms of failure of the item (being a part or system (subsystem) function under investigation. the failure occurs or the observed effect. It may generally describe the way the failure occurs or the observed effect.
FMEA	Failure mode and effects analysis. A systematic technique for failure analysis of the systems to whatever level of detail is required to identify the potential failure modes, their causes and effects on the performance of a system.
FMECA	Failure Mode, Effects and Criticality Analysis. An extension to the FMEA to include a means of ranking the severity of the failure modes to allow prioritization of countermeasures. This is done by combining the severity measure and frequency of occurrence to produce a metric called criticality
Function	A function is what the system or equipment item is designed to do. Each function shall be documented as a function description, an object on which the function acts, and FMEA standard(s). Failure Mode, Effects and Criticality Analysis. An extension to the FMEA to include a means of ranking the severity of the failure modes to allow prioritization of countermeasures. This is done by combining the severity measure and frequency of occurrence to produce a metric called criticality.
Interface	A point at which independent systems, devices or components interact or communicate.
Redundancy	Reliability is the ability of an item to perform a required function for a stated period of time under stated conditions.

Term	Definition
Reliability	Reliability is the ability of an item to perform a required function for a stated period of time under stated conditions.
Safety	The absence of unacceptable direct or indirect risks of injury or damage to persons' health as a result of direct or indirect damage of property or environment.
Severity	The magnitude of the consequence as a result of a failure mode occurring. Severity considers the worst potential consequence of a failure mode.
System	Set of interrelated or interacting elements. In the FMEA context, a system shall have defined purposes expressed in: terms of the particular purpose in the form of functions performed by it; stated conditions of operation use; a defined boundary. The structure of a system is hierarchical.
System boundary	The system boundary forms the physical and functional interface between the system and its environment, including other systems with which the analyzed system interacts. The definition of the system boundary for the analysis shall correspond to the boundary as defined for design and maintenance. This shall apply to a system at any level. Systems, devices and components outside the boundaries shall explicitly be defined for exclusion.

2. FMEA PROCESS

The FMEA process can be divided into several steps as shown in Fig. 2. These steps are further described in the following paragraphs, as referenced in Fig. 2. The FMEA report shall describe all necessary information used as input for the FMEA process as well as the assumptions and results. The FMEA report is described in Section 3.

	Refer to	Para
1.	Define and describe the application of system and control item	2.1
▼		
2.	Establish performance acceptance criteria	2.2
▼		
3.	Identify all potential failure modes and their causes	2.2.4
▼		
4.	Evaluate the effects for each failure mode	2.2.5
▼		
5.	Identify the failure detection methods	2.2.6
▼		
6.	Assess the severity and frequency of occurrence	2.2.7
▼		
7.	Evaluate the established risk index	2.2.8
▼		
8.	Identify corrective measures for failure modes	2.2.9
▼		
9.	Document the analysis	2.2.10
▼		
10.	Describe input to test program	2.2.11

N o t e . The process may require iterations not represented in this scheme.

Fig. 2. Control system FMEA process

2.1 Define and describe the application of system and control item

As a basis for the FMEA, the system to be analyzed shall be described through narrative text, use of drawings and reference to equipment manuals. The narrative description of the system, its operational modes, boundaries and functional requirements shall address the following:

2.1.1 Description of application of the control item. For example, the following variants are possible for ICE:

single main engine propulsion (and limitations of application, e.g. controllable pitch propeller only);

main engine multiple engines (diesel-electric and diesel-mechanic);

engine of main input power; emergency engine; engine for auxiliary or deck machinery.

2.1.2 Functional description of system operation, structure and boundaries.

Description of system boundaries (physical, e.g. diesel engine and control system elements considered in the analysis as well as operational boundaries, e.g. performance parameters):

I/O signal specification, sensors and actuators; interface signal specification;

monitoring system, including human-machine-interfaces; network connection, e.g. CAN bus, Ethernet; protection, e.g. galvanic isolation; hardwired safety circuits; power supply arrangement;

definitions of interactions with external systems (e.g. ship alarm system, control system of ship automated electrical power plant);

definition of limiting performance parameters influenced by the control system, e.g. temperature, pressure, power, speed, etc;

design intent(s) and system operational modes for the electronic control system: description of manual operation;

description of local/remote mode; alarms/warnings.

Any interface to the engine safety system, if applicable.

Illustration of the interrelationships of functional elements of the system by means of block diagram(s).

The block diagram(s) shall provide a graphical representation of the system and its components for the subsequent analysis. As a minimum, the block diagram shall contain:

breakdown of the system into major sub-systems and/or components;

all appropriately labelled inputs and outputs and identification numbers by which each sub-system/component is referenced;

all redundancies, alternative signal paths and other engineering features, which provide "fail-safe" measures.

It may be necessary to develop a different set of block diagrams for each operational mode.

2.1.3 Functional relationships among the system elements, including:

listing of all component units and components within the control system boundary (part list, names, functions);

redundancy level and nature of the redundancies, separation, independency;

description of multiple CPU operation from a system architecture perspective; distributed control system architecture.

2.1.4 System requirements and function with acceptable functional performance limits of the system and its constituent elements in each of the typical operational modes:
acceptance criteria for the electronic control - and safety system performance depending on control item application.

2.1.5 System constraints.

2.2 Establish safety and performance acceptance criteria

Performance acceptance criteria shall be established considering:

the pertinent class and flag requirements;

the acceptable operating criteria set by the engine designer with respect to safety and performance availability;

application of control item, e.g. a single engine propulsion application may have stricter acceptance criteria than a multiple engine propulsion application, for instance higher redundancy requirements and design for fault tolerance, meaning that the system can maintain safe operation in the presence of a certain number and certain types of failures.

2.2.1 The acceptable performance criteria need to be stated in a manner, which enables the evaluation of each failure mode against these criteria. It is recommended to apply a risk matrix, using a severity index, reflecting the impact of a failure mode to the safety and to the performance, and a frequency index reflecting the frequency of occurrence of the event.

2.2.2 The assumptions made in the evaluation of the severity and frequency indices shall be documented

2.2.3 The examples of indices and the resulting risk matrix (risk index table) are given in Tables 2.2.3-1, 2.2.3-2 and 2.2.3-3 accordingly. Depending on the specific analysis, a different scale or number of index steps may be used, the risk matrix may be divided into three

areas: an area with an acceptable risk index (Table 2.2.3- 3, here lower left with indices 2 and 3), the area with not-acceptable risk indices (Table 2.2.3-3, here upper right with indices 5, 6 and 7), and the area between the before mentioned two (Table 2.2.3-3 , here the diagonal with index 4), where the acceptance depends on further description of the event, for instance means of detection of the failure and the possibility of a manual mode of operation after a failure has occurred. In this area every effort shall be made to make the risk as low as reasonably practicable.

Table 2.2.3-1

Example of Severity Index (SI) table

SI	Name	Definition
3	High	Serious impact on safety, e.g. fatality and/or serious impact on the control item performance e.g. ICE stop.
2	Medium	Medium impact on safety, e.g. injury and/or medium impact on the control item performance e.g. ICE de-rated.
1	Low	Negligible to low impact on safety and/or negligible to low impact on the control item performance.

Table 2.2.3-2

Example of Frequency Index (FI) table

FI	Name	Definition
4	High	1 or more events per year of operation
3	Medium	1 event in 10 to less than 1 event in 1 item per year of operation
2	Low	1 event in 100 to less than 1 event in 10 engines per year of engine operation
1	Very low	Less than 1 event in 100 engines per year of engine operation

Table 2.2.3-3

Example of Risk Index Matrix

	FI	1	2	3	4
SI		Very low	Low	Medium	High
3	High	4	5	6	7
2	Medium	3	4	5	6
1	Low	2	3	4	5

2.2.4 Identify all potential failure modes and their causes.

A failure mode is the specific effect by which a failure is observed. When used in conjunction with functional performance specifications governing the inputs and outputs on the system block diagram, all potential failure modes can be thus identified and described.

Each (sub-) system shall be considered in a top-down approach starting from the system's functional output. A failure shall be assumed by one possible cause at a time. Since a failure mode may have more than one cause, all potential independent causes for each failure mode shall be identified.

All potential common cause failures shall be identified; it is not sufficient to consider only random and independent failures. Some common-cause failures (CCF) can occur, that cause system performance degradation or failure through simultaneous deficiency in several system components, due to a single source, environmental stresses, or human error. CCFs are those failures, which defeat the fundamental assumption that the failure modes under consideration in the FMEA are independent. The CCF will cause more than one item to fail simultaneously, or within a sufficiently short period of time as to have the effect of simultaneous failures. Typically, sources of CCF include environmental influences, such as electrical interference, temperature cycling, vibration, as well as human factors like incorrect operating or maintenance actions.

2.2.5 Evaluate the effects for each failure mode.

The consequence of a failure mode on the operation, function, or status of a component or a system is called a 'failure effect'. The failure effects shall be evaluated regarding safety and availability in two respects locally, (i.e. related to the engine, considering effects to the engine safety system as well, if applicable; and globally, i.e. related to the engine application, e.g. single prime mover in a ship or multiple engine installation.

2.2.6 Identification of the failure detection methods.

A failure detection method can be a visual or audible warning device, automatic sensing devices, sensing instrumentation, manual inspection or other unique indications. These shall be identified for every failure mode and its causes, as appropriate.

2.2.7 The severity of each failure effect, as well as the frequency of occurrence of each failure mode dependent on the acceptable performance and safety criteria.

The severity of each failure effect, as well as the frequency of occurrence of each failure mode shall be assessed using elaborated index tables dependent on the acceptable performance and safety criteria as described in 2.2 above. Local and global effects on safety and availability shall be considered when determining the severity index.

2.2.8 Evaluate the established Risk Index.

The risk index for each failure mode shall be evaluated as described in 2.2.3 and the example in Table 2.2.3-3.

2.2.9 Identify corrective measures for failure modes.

The response of any back-up equipment, or any corrective action (manual or automatic) initiated at a given system level to prevent or reduce the effect of the failure mode of a system element or component shall be identified and evaluated.

2.2.10 Document the FMEA.

The FMEA results may be documented on worksheets with a structure similar to the example below.

The worksheet(s) shall start with the highest system level and then proceed down through the system hierarchy.

Example of FMEA worksheet

Name of system | Reference(s)
Mode of operation | System block diagram
Sheet No.
Date
FMEA participants | Drawings

Identi-ficatio n No.	Item description	Function	Failure mode	Failure effects		Severity Index of failure effects	Failure cause s	Frequency Index of event	Risk Index	Detectio n method	Correc tive action	Remarks, testing
				local	common							
	Refer to 2.1	Refer to 2.1.4	Refer to 2.2.4	Refer to 2.2.5	Refer to 2.2.5	Refer to 2.2.7	Refer to 2.2.4	Refer to 2.2.7	Refer to 2.2.8	Refer to 2.2.6	Refer to 2.2.9	Refer to 2.2.11

2.2.11 Describe input to test program.

A test program shall be developed to confirm the conclusions of the FMEA results and check of all the assumptions made.

3 FMEA REPORT

The FMEA report shall include a technical description of the control system, its subsystems and their functions and the proposed operating and environmental conditions for the failure modes, causes and effects to be understood. The analysis assumptions, system block diagrams, performance acceptance criteria, worksheets (ref. to 2.2.10), as well as the reference to a test program and any other test reports shall be included. The report shall contain a summary of the main conclusions, such as the results of the evaluation against the acceptance criteria.

APPENDIX 3 (recommended)

CHECK-LIST OF THE SCOPE OF DOCUMENTATION

Name of equipment (system): Description of equipment (system):		
Code of document	Document title	Symbol
C1	Documentation for programmable electronic systems shall be in compliance with Section 7, Part XV “Automation” of the Rules for the Classification and Construction of Sea-Going Ships	
D1	Assembly drawing	
D2	General arrangement plan	
D3	Functional block diagram	
D4	Circuit diagram	
T1	Specification	
T2	Explanatory notes	
T3	Technical specifications	
T4	Test program and test procedure	
T5	Failure mode and effects analysis (FMEA)	
I1	Explosion-proof certificate	

APPENDIX 4 (recommended)

CHECK-LIST OF THE TEST PROGRAM

Name of equipment (system): Description of equipment (system):		
Test item No.	Test	Test report[1]
12.4.13	Programmable electronic system testing	
12.6.1	Visual inspection	
12.6.2	Insulation resistance measurement	
12.6.3	Test for insulation electric strength	
12.6.4	Functional tests	
12.6.5	Vibration tests	
12.6.6	Shock tests	
12.6.7	Tests for resistance to motions and prolonged inclinations	
12.6.8	Tests for heat stability	
12.6.9	Tests for cold endurance	
12.6.10	Damp heat tests	
12.6.11	Tests for exposure to salt mist (corrosion resistance)	
12.6.12	Protective enclosure testing	
12.6.13	Test for rated power supply deviation	
12.6.14	Test for the level of radiated electromagnetic emission	
12.6.15	Test for resistance to external electromagnetic interference.	
12.6.15.1	Resistance to conductive low frequency interference	
12.6.15.2	Tests for resistance to conducted radio frequency interference	
12.6.15.3	Test for resistance to nanosecond pulse interference due to burst electrical fast transient in the AC supply lines, signal, data and control circuits	
12.6.15.4	Tests for resistance to microsecond pulse interference	
12.6.15.5	Tests for resistance to electrostatic discharges	
12.6.15.6	Tests for resistance to electromagnetic field	
12.6.16	Test for tolerable levels of radiated and conducted interference	
12.6.17	Flame retardant tests	
12.6.18	Fungus resistance tests	
[1]Report number and date of test conducting shall be indicated in case the tests are performed by ACS or without witnessing of the surveyor at the RS recognized laboratory		

13 LIFE-SAVING APPLIANCES

13.1 GENERAL

13.1.1 The provisions of the present Section apply in performing technical supervision of life-saving appliances listed in the RS Nomenclature.

13.1.2 The Section contains the Register technical supervision requirements during manufacture of the mentioned items/products of supervision at the manufacturer's.

13.1.3 General provisions on arranging technical supervision during construction of life-saving appliances are set forth in Part I "General Regulations for Technical Supervision", and on technical documentation – in Part II "Technical Documentation".

13.1.4 If necessary, the Register may require to have its technical supervision during design and manufacture of life-saving appliances, including items/products of outfit and equipment not listed in the RS Nomenclature.

13.2 TECHNICAL SUPERVISION OF PROTOTYPES

13.2.1 The Register technical supervision during design and manufacture of prototypes (lots) of life-saving appliances, including items/products of outfit and equipment, shall be divided into the steps/stages as follows:

.1 examination and approval of the technical and working design;

.2 examination and approval of the program and test technologies/methods for prototypes;

.3 participation in tests of prototypes (first lots);

.4 examination and approval of the test program for life-saving appliances manufactured at the manufacturer's with serial production, and updated in accordance with test results of a prototype.

13.2.2 When examining technical documentation and surveying the prototypes of life-saving appliances, it is necessary that compliance with general technical requirements for these items/products prescribed in the relevant Parts of the Rules shall be verified in accordance with 13.1.1.

13.2.3 The scope of technical documentation to be submitted for the Register approval shall be in conformity with the requirements prescribed in 1.3, Part II "Life-Saving Appliances" of the Rules for the Equipment of Sea-Going Ships.

13.3 TYPES OF TESTS

13.3.1 The test program to be performed by a technical control body of the firm (manufacturer) shall be ap-proved by the Register.

13.3.2 Check tests of materials and products to be conducted by the Register so that to confirm the Recognition Certificate for Manufacturer or to confirm serial production and compliance of materials and products with approved technical documentation in cases, when it is not required to issue Recognition Certificates, may be coincident with the periodical tests of materials and products.

13.3.3 The Register tests of prototypes and tests required for issuing Type Approval Certificates (or Recognition Certificates for Manufacturers) may be coincident with the type tests of materials and products.

13.4 TECHNICAL SUPERVISION AT THE FIRM (MANUFACTURER)

13.4.1 All materials and complementing items required for manufacturing life-saving appliances shall be documented to confirm their compliance with the approved documentation. These documents shall be issued on the technical supervision forms under the RS Nomenclature.

13.4.2 Surveys of life-saving appliances by Surveyors at the firm (manufacturer) in the course of different stages of production shall be conducted as indicated in the list of supervised items to be prepared by the firm (manufacturer) on the basis of the requirements of this Section (refer to Tables 13.4.2-1 to 13.4.2-5) and agreed with the RS Branch Office (refer to 12.2, Part I "General Regulations for Technical Supervision").

As initiated by the RS Branch Office, the list shall be updated by the firm (manufacturer) on the basis of survey findings of life-saving appliances of ships in service.

The tests of prototypes shall be completed under the program approved by the Register.

The number of specimens of prototype lots of production subject to tests shall be prescribed by the test program. The number of products to be inspected at the manufacturer's with serial production may be either increased or decreased at the Surveyor's discretion.

Table 13.4.2-1

Scope of surveys of lifeboats and rescue boats

Nos.	Tests (Inspections)	Survey of prototype	Survey at the manufacturer's with serial production	Number of products inspected at the ianufacturer's with serial sroduction, in per cent
1	Cheching material quality	+	+	100
2	Inspection of dimensions and construction of lifeboats	+	+	100
3	Static strength test of hull of lifeboats and rescue boat to be launched by falls	+	+	Each tenth but 1 of the lot at least
4	Strength test of arrangements for launching and recovery	+	+	100
5	Hull tightness test of lifeboats	+	+	100
6	Determination of volumes of air lockers and compartments with buoyancy material	+	–	–
7	Tightness test of air lockers and compartments	+	+	100
8	Measurement of carrying capacity of lifeboats	+	–	–
9	Determination of lifeboat hull mass	+	+	Each tenth but 1 of the lot at least
10	Determination of lifeboat free board	+	–	–
11	Stability test of lifeboats (inclining test)	+	–	–
12	Flooding resistance of lifeboats	+	–	–
13	Impact test	+	–	–
14	Drop test	+	–	–
15	Security strength test of arrangements for launching and recovery	+	+	100
16	Test of protective cover of lifeboat, canopy erected	+	+	100
17	Inspection of seating and loading space aboard	+	–	–
18	Test of lifeboat’s rigging	+	+	100
19	Test of mechanical propeller assembled and mounted	+	+	100
20	Mooring trials of motor lifeboats and hand-propelled lifeboats	+	+	100

Nos.	Tests (Inspections)	Survey of prototype	Survey at the manufacturer's with serial production	Number of products inspected at the ianufacturer's with serial sroduction, in per cent
21	Underway trials of motor lifeboats during at least 2 h	+	+	100
22	Speed determination of motor lifeboats and steering gear arrangement test	+	–	–
23	Speed determination of hand-and-power-propelled lifeboats	+	–	–
24	Fire tests of fire-protected lifeboats for tankers	+	–	–
25	Sea trials	+	–	–
26	Inspection of full complement and equipment of lifeboats	+	+	100
27	Painting and marking inspection of lifeboats	+	+	100
28	Release unit test of a free-fall lifeboat when its total mass exceeds twice the entire mass of the fully equipped and fully manned boat.	+	–	–
29	Inspection of retro-reflective tapes fitted	+	+	100
30	Engine inversion test prior to its installation onboard	+	–	–
31	Submerged engine test	+	–	–
32	Engine-out-of-water test	+	–	–
33	Cold engine start test	+	–	–
34	Tests of lifeboats with a self-contained air support system	+	+	100
35	Tests of water spray system of fire-protected lifeboats	+	+	100
36	Watertight tests of enclosures of totally enclosed lifeboats	+	+	100
37	Electrical equipment test of lifeboats	+	+	100
38	Engine start test inboard totally enclosed lifeboat after it capsizes	+	+	100
39	Security inspection of safety belts aboard totally enclosed lifeboats	+	+	100
40	Release unit test of lifeboats and rescue boats with 10 % overload	+	+	100
41	Test of free-fall lifeboats with a load of 1,1 times the working load	+	+	100
42	Test of free-fall lifeboats to be launched from a height of 1,3 times its free-fall certification height	+	–	–
43	Test of free fall lifeboats to determine acceleration forces	+	–	–
44	Test of the release mechanism (hook) connection to the lifeboat hull under the load equal to mass of the lifeboat loaded with its full complement of persons and equipment or double mass of the lifeboat with one fall (not applied to the lifeboats dropped into the water)	+	+	100

Table 13.4.2-2

Scope of surveys of life rafts at different stages of manufacturing

Nos.	Tests (Inspections)	Survey of prototype	Survey at the manufacturer's with serial production	Number of products inspected at the manufacturer's with serial production, in per cent
1	Checking material quality and adhesion of surface coatings	+	+	Each lot
2	Visual inspection and dimensional examination of life rafts	+	+	100
3	Drop tests and jump test of life rafts for strength	+	+	–
4	Strength test of launching-and-recovery arrangements of life rafts	+	+	100
5	Watertight test of metal life rafts	+	+	100
6	Watertight test of inflatable life rafts by pressure and container is tested for prototype only	+	+	100
7	Watertight test of glass-reinforced plastic life rafts	+	+	100
8	Watertight and buoyancy tests of containers for equipment	+	+	2
9	Stability test	+	+	–
10	Buoyancy test of float-free life rafts	+	–	–
11	Loading and boarding space test of life rafts	+	–	–
12	Manoeuvrability tests and painter system strength (towing arrangements) test	+	–	–
13	Flooding resistance and inspection of protective cover (canopy)	+	+	2
14	Test of capability of life rafts to be easily righted when in the inverted position	+	–	–
15	Inspection of proper package of life rafts in their containers and test of capability of gas inflation system to function properly	+	+	2
16	Inspection of full complement of equipment and outfit items	+	+	100
17	Inspection of the mass of life raft and cylinder	+	+	100
18	Painting and marking inspection of life rafts	+	+	100
19	Inspection of retro-reflective tapes fitting and securing	+	+	100
20	Test of hydrostatic release units	+	+	2
21	Test of davit-launched life rafts with 10 per cent overload	+	+	100
22	Manoeuvrability tests	+	–	–
23	Weak link strength test	+	+	2
24	Impact, drop and embarkation tests of davit-launched life rafts	+	–	–
25	Additional tests applicable to inflatable life rafts only	+	–	–
26	Additional tests applicable to automatic self-righting life rafts only	+	–	–
27	Submergence test of automatic self-righting life rafts and canopied reversible life rafts	+	–	–
28	Wind velocity test	+	+	1 per cent or 1 life raft
29	Self-draining test	+	–	–
30	Mooring out test	+	–	–
Note. The tests shall be completed in accordance with the applicable provisions of IMO resolution MSC.81(70).				

Table 13.4.2-3

Scope of surveys of life buoys, lights and self-activating smoke signals

Nos.	Tests (Inspections)	Survey of prototype	Survey at the manufacturer's with serial production	Number of products inspected at the manufacturer's with serial production, in per cent
1	Checking material quality	+	+	Each lot of life buoys
2	Dimensions	+	+	2 per cent of the lot, but 2 at least
3	Examination of internal structure (with coating broken up)	+	–	–
4	Visual inspection of painting, marking and positioning of retro- reflective tapes	+	+	100
5	Mass determination	+	+	10
6	Buoyancy test	+	–	–
7	Water absorption test	+	–	–
8	Temperature cycling test	+	–	–
9	Crude oil test	+	–	–
10	Drop strength test	+	–	–
11	Strength test	+	+	2 per cent of the lot, but 2 at least
12	Fire test of buoyant material	+	–	–
13	Fire test	+	–	–
14	Operational tests of life buoys fitted with lights and smoke signals	+	–	–
15	Tests of self-igniting lights	+	–	–
16	Tests of self-activating smoke signals	+	–	–
Note. The tests shall be completed in accordance with the applicable provisions of IMO resolution MSC.81(70).				

Table 13.4.2-4

Scope of surveys of life jackets

Nos.	Tests (Inspections)	Survey of Prototype	Survey at the Manufacturer's with Serial Production	Number of Products Inspected at the Manufacturer's with Serial Production, in per cent
1	Checking material quality	+	+	Each lot of life buoys
2	Dimensions inspection	+	+	2 per cent of the lot, but 2 at least
3	Examination of internal structure (with coating broken up)	+	–	–
4	Visual inspection of coating colour, inscriptions, markings, and fitting of retro-reflective tapes	+	+	100
5	Mass determination	+	+	10
6	Buoyant test	+	+	2 per cent the lot, but 2 at least
7	Water absorption test	+	–	–
8	Complement test	+	+	10
9	Temperature cycling test	+	–	2 per cent the lot, but 2 at least
10	Fire tests	+	–	–
11	Crude oil test	+	–	–
12	Drop test	+	+	2 per cent the lot, but 2 at least
13	Fire test of buoyant material	+	–	–

Nos.	Tests (Inspections)	Survey of Prototype	Survey at the Manufacturer's with Serial Production	Number of Products Inspected at the Manufacturer's with Serial Production, in per cent
14	Test of life jackets correctly donned and comfortably worn	+	–	–
15	Strength test	+	+	2 per cent the lot, but 2 at least
16	Electric light and whistle tests	+	–	–
17	Buoyancy material test	+	–	–
18	Donning test	+	–	–
19	Tests in the water	+	–	–
20	Tests of life jackets for children	+	–	–
21	Test of inflatable life jackets	+	–	–
N o t e . The tests shall be completed in accordance with the applicable provisions of IMO resolution MSC.81(70).				

T a b l e 13.4.2-5

Scope of surveys of launching appliances of life craft

Nos.	Tests (Inspections)	Test load	Angle of heel (Anti heel)	Angle of trim	Surveys			
					of prototypes		at the manufacturer's with serial production	
					davitlaunched boats	davitlaunched Rafts	davitlaunched boats	davitlaunched rafts
1	Checking dimensions, construction and material quality	–	–	–	+	+	+	+
2	Strength test of:							
2.1	Launching appliance in assembly	$2{,}2p_w$	20°	10°	+	+	+	+
2.2	Padeyes for fastenings and lashings	$2{,}2p_w$	20°	10°	+	+	+	+
2.3	Fastening stoppers and horns of arms and other fastenings of davit arms	$1{,}2p_w$	20°	10°	+	–	+	–
3	Operational tests of launching appliances under the working load:							
3.1	Fastening stoppers of davit arms	$1{,}1p_w$	20°	10°	+	–	+	–
3.2	Turning out and launching of survival craft	$1{,}1p_w$[1]	20°	10°	+	+	+	+
3.3	Automatic release of davit arms	p_w	20°	10°	+	–	+	–
3.4	Lifting and recovery of boats	p_w	20°	10°	+	–	+	–
3.5	Raft launching by gravity and serviceability of davit release mechanism of raft launching and recovery appliances	p_w	20°	10°	–	+	–	+
3.6	Dynamic test of winch brakes	$1{,}1p_w$	0°	0°	+	+	+	+
3.7	Static test of winch brakes	$1{,}5p_w$	0°	0°	+	+	+	+

[1] p_w is applicable at the appropriate stage of operation.

N o t e . The tests shall be completed in accordance with the applicable provisions of IMO resolution MSC.81(70).

13.4.3 Methods of tests (inspections) of life-saving appliances at the firm (manufacturer) are prescribed in IMO resolution MSC.81 (70) "Revised Recommendation on Testing of Life-Saving Appliances", as amended by IMO resolutions MSC.200(80), MSC.226(82), MSC.274(85), MSC.295(87), MSC.321(89), MSC.323(89), MSC.427(98).

13.4.4 The form of technical supervision of life-saving appliances and arrangements at the firm (manufacturer) is provided in the RS Nomenclature.

13.4.5 Technical supervision during manufacture of engines for life boats is conducted in compliance with the requirements stated in Section 5, and additional requirements set forth in IMO resolution MSC.81(70).

The scope of surveys and tests of immersion suits, anti-exposure suits, thermal protective aids, fast rescue boats, line-throwing appliances, lights indicating positions of life-saving appliances, marine evacuation systems, search lights for life boats and rescue boats is specified in accordance with the provisions of IMO resolution MSC.81(70).

13.4.6 During the survey the Register shall inspect the technical and material equipment of the firm (manufacturer), facilities and storage premises for initial manufacturing materials and production areas, its compliance with manufacturing technologies approved by the Register, procedures of issuing documents and availability of results of any tests and inspections conducted by the local laboratories and personnel of supervising bodies of the firm (manufacturer).

13.4.7 The premises and facilities of firm (manufacturer) shall meet the necessary provisions required by standards, specifications and manufacturing technologies. Adequate instrumentation shall be used to monitor technological and climatic conditions.

13.4.8 When performing technical supervision during manufacture of life-saving appliances, the Register shall carry out regular surveys of the manufacturer's so that to ascertain that Recognition Certificate is applicable as well to other cases specified in Part I "General Regulations for Technical Supervision".

13.5 MARKING AND BRANDING OF LIFE-SAVING APPLIANCES

13.5.1 The procedure of marking, branding and stamping by the Register is described in the Instructions on Branding of Items Supervised by the Register in Part I "General Regulations for Technical Supervision".

14 SIGNAL MEANS

14.1 GENERAL

14.1.1 The provisions of the present Section apply in performing technical supervision of signal means subject to technical supervision by the Register under the RS Nomenclature.

14.1.2 The present Section specifies requirements for the Register technical supervision during manufacture and tests of signal means.

14.1.3 Definitions and explanations concerning the general terminology are given in Part III "Signal Means" of the Rules for the Equipment of Sea-Going Ships.

14.1.4 General provisions concerning technical supervision of signal means are set forth in Part I "Surveys Regulations" of the Rules for the Equipment of Sea-Going Ships" and in Part I "General Regulations for Technical Supervision" of the Rules.

14.1.5 The scope of surveys of signal means by the Register at the manufacturer's with serial production is set forth in Table 14.1.5.

Table 14.1.5

Items of technical supervision	Inspection of documentation and complementing items	Visual inspection	Inspection of							Tests for immunity to electromagnetic emission (EME)	Measure of insulation resistance	Inspection of basic frequencies range	Determination of sound pressure level
			Dimensions and masses	Strength of fastening of pendant light	functioning	Interchange ability	waterproofness	Insulation electrical strength	Radio interference level				
Navigation lights	+	+	+	+	+	+	+	+	+	+	+	–	–
Flashing lights[1]	+	+	+	+	+	+	+	+	+	+	+	–	–
Sound signal means	+	+	+	–	+	+	–	–	–	–	+	+	+

[1]Excepting the lights with incandescent lamps and with no ignition control devices.

14.2 TECHNICAL DOCUMENTATION

14.2.1 Signal means shall comply with the Rules for the Equipment of Sea-Going Ships and be manufactured under the technical documentation approved by the Register.

14.2.2 General provisions relating to the procedure of examination and approval of technical documentation are set forth in Part II "Technical Documentation".

14.2.3 Technical documentation on manufacture of signal means shall include the following:

.1 product specifications describing light, sound, etc. characteristics of applied materials, welding and other joints, directions for processing technologies, assembling, methods of coatings, organization of control;

.2 assembly drawings and structural drawings of sections, units and component parts;

.3 program of approval testing;

.4 list of complementing items.

14.3 TECHNICAL SUPERVISION DURING MANUFACTURE OF SIGNAL MEANS

14.3.1 Technical supervision during manufacture of signal means shall include the following:

.1 review of technical documentation;

.2 inspection of the quality control system accepted at the firm (manufacturer) including input control;

.3 quality assurance of materials, semi-finished items, products, resources (where necessary);

.4 survey and tests of prototypes of signal means;

.5 survey and test of signal means at the manufacturer's with serial production;

.6 issuing documents for manufactured signal means.

14.4 NAVIGATION LIGHTS AND FLASHING LIGHTS

14.4.1 The prototypes of lights are subject to tests under the program approved by the Register.

14.4.2 The tests of the prototypes of lights shall include:

.1 check of compliance of details and assembly units with the working documentation;

.2 check of dimensions and mass;

.3 operating/functioning tests;

.4 tests of lighting characteristics;

.5 vibration and impact shaking tests including strength tests of efficient securing of marine pendant lights;

.6 rain test and water-tightness tests;

.7 operating tests under the temperature cycling (high and low temperatures of ambient air) conditions;

.8 anticorrosion test;

.9 heat resistance test;

.10 seawater resistance test;

.11 operating tests under heeling and trimming conditions;

.12 insulation electrical strength tests of lights;

.13 insulation resistance of electric lights;

.14 operating and dimensional tests of lighting characteristics under variations of rated supply voltage and current frequency from standard values within those regulated by the Rules for the Classification and Construction of Sea-Going Ships and the Rules for the Equipment of Sea-Going Ships;

.15 electrical short circuit protection to prevent from getting into contact with current carrying parts;

.16 wind velocity tests of the oil lights;

.17 burning time tests of oil lights;

.18 inspection of radio interference level;

.19 tests for immunity to electromagnetic emission (EME).

14.4.3 Check of the range of visibility of prototype lights shall be carried out in the laboratory conditions and confirmed during full-scale underway tests.

14.4.4 Results of these tests may be considered satisfactory in case the tested lights are in complete conformity with the requirements of the Rules for the Classification and Construction of Sea-Going Ships and Rules for the Equipment of Sea-Going Ships.

14.4.5 At the manufacturer's with serial production the lights shall be subject to acceptability tests under the program approved by the Register.

14.4.6 At the manufacturer's with serial production surveys and tests shall include the following inspections of:

.1 compliance of details and assembly items with the operating documentation;

.2 dimensions and mass;

.3 operating tests;

.4 interchangeability of details and units;

.5 reliability of security unit of marine pendant lights;

.6 waterproofeness;

.7 electrical strength and resistance of insulation.

14.4.7 Where survey and tests of the lights are satisfactory, the appropriate Certificate shall be issued.

14.4.8 Markings of the light accepted by the Register shall include the following: the firm (manufacturer) trade mark, identification and type of the light, its ordinal number, range of visibility and lamp power and the date of manufacture.

14.4.9 The marking shall be applied on an anticorrosion metal plates permanently attached in readily accessible places in such a way that they can be easily found after installation on board the ship. Additionally, sector lights shall have axial marks.

14.5 SOUND SIGNAL MEANS

14.5.1 The prototypes of signal means shall be bench tested and marine full scale tested under the program approved by the Register.

14.5.2 Bench tests of the prototypes of sound signal means shall include the following:

.1 visual inspection;

.2 check of dimensions, mass as well as characteristics of the applied materials;

.3 operating tests under the vibration and impact shaking conditions;

.4 waterproof tests;

.5 operating tests under the temperature cycling (high and low temperatures of ambient air) conditions;

.6 operating tests under heeling and trimming conditions;

.7 anticorrosion test;

.8 heat resistance test;

.9 determination of the ranges of the basic parts;

.10 determination of the sound pressure levels;

.11 determination of insulation resistance;

.12 determination of insulation resistance of sound signal means;

.13 electrical short circuit protection to prevent from getting into contact with current carrying parts.

14.5.3 Marine full scale tests of the prototype signal means shall include the following: determination of the sound pressure levels, the range of audibility, the difference of the sound pressure level in horizontal plane, the durability and frequency of signal sounding, as well as check of possible manual actuation of signals with automatic cutting-off the automatic controls at the moment of manual actuation and also drainage of condensate.

14.5.4 Test results of prototype signal means shall be considered satisfactory where they are in full compliance with the requirements of the Rules for the Equipment of Sea-Going Ships.

14.5.5 At the manufacturer's with serial production, the prototype signal means shall be subject to bench tests under the program approved by the Register.

14.5.6 At the manufacturer's with serial production surveys and bench tests of sound signal means shall include the following:

.1 visual inspection;

.2 check of dimensions and mass;

.3 check of interchangeability of details and units;

.4 determination of the ranges of basic parts;

.5 determination of the sound pressure levels;

.6 determination of insulation resistance;

.7 operating tests.

14.5.7 Upon satisfactory results of surveys and tests, the appropriate type of certificate shall be issued for the sound signal means.

"**14.5.8** The markings of the sound signal means surveyed by the Register shall include the manufacturer's trade mark, ordinal number, assignment according to the ship's length in meters and the date of manufacture.

14.6 PYROTECHNIC SIGNAL MEANS

14.6.1 The Register technical supervision during manufacture of pyrotechnic means shall include review of technical documentation therefor.

14.6.2 Prototype pyrotechnic signal means shall be bench tested and full scale tested under the program approved by the Register.

14.6.3 The bench tests of the prototype signal means shall include:

.1 visual inspection;

.2 check of dimensions and mass;

.3 determination of luminous intensity;

.4 determination of chromaticity;

.6 temperature tests;

.7 anticorrosion waterproof tests;

.8 pyrotechnic safety in operation tests;

.9 operating tests;

.10 transportability tests.

14.6.4 Full scale tests of prototype pyrotechnic signal means shall contain determination of the altitude, burning time, audibility range and attenuation altitude.

14.6.5 Test results of the prototype pyrotechnic signal means shall be considered satisfactory where they are in full compliance with the requirements of the Rules for the Equipment of Sea-Going Ships.

14.6.6 The marking of pyrotechnic signal means shall include identification, purpose, date of manufacture, time of serviceability, identification and the number of technical documentation approved by the Register and the date of its approval.

14.6.7 Pyrotechnic signal means shall be provided with brief instructions applied in indelible paint on the product case.

14.7 SIGNAL SHAPES

14.7.1 The Register technical supervision during manufacture of signal shapes shall include review of technical documentation.

14.7.2 Prototype signal shapes complying with the requirements of the Rules for the Equipment of Sea-Going Ships shall be kept at the manufacturer's until after any change has been introduced in the construction of signal shapes.

14.7.3 Marking of signal shapes shall contain a statement that a product has been manufactured in conformity with the technical documentation approved by the Register.

14.8 TESTING LABORATORIES, BENCH TESTS

14.8.1 Testing laboratories carrying out tests in the course of manufacture of materials and products required by the Register Rules for the Equipment of Sea-Going Ships shall be recognized by the Register in accordance with Section 9, Part I "General Regulations for Technical Supervision". Recognition Certificate for Manufacture is subject to confirmation at least once in every two years.

14.8.2 The laboratories and equipment thereof required for the tests of signal means shall meet the requirements of the relevant standards. The tests shall be carried out by officials having an identification document issued by a competent body confirming their authorization for doing the tests. Prototypes of signal means shall be tested under the program approved by the Register. The program shall be prepared accounting for the provisions and requirements of the Management, the Register normative documents and approved documentations.

14.8.3 Bench tests requirements are set forth in Section 5 and in Appendices 1, 2 and 3.

APPENDIX 1

TESTS OF PROTOTYPE LANTERNS (TYPE TESTS)

1. External inspection.

This is expected to include a detailed visual inspection of lights, externally and internally, with the purpose of checking their compliance with the technical documentation.

The quality assurance of material shall be confirmed by certificates issued by the firm (manufacturer), as well as by the results of in-data control.

Lights in assembly and their details shall be subject to external inspection. Prior to the assembly of a product all the parts shall be thoroughly cleaned of dirt, conservation etc. Weld joints, unevenness shall be grinded, sharp edges shall be made blunt. The surfaces of interfaced parts as well as sealing surfaces shall have no chippings, scratches, marks or any other defects.

Full complement, adequate assembly, coatings quality, reliable fastening of parts and availability of markings shall be inspected. Special attention shall be paid to the condition and correct fitting of Fresnel lenses and cylinders. The inner and outer surfaces of the lenses shall be smooth, and the filter glass shall be free of flaws, foreign inclusions, blisters and notches, spallings, dullings, etc. The colouring of coloured lenses or coloured light filters shall be homogenously coloured throughout their entire surface.

The light filters shall be fixed in lanterns in such a way as to preclude their spontaneous shifting and falling, and also prevent the possibility of placing the red filter instead of the green one and vice versa.

2. Inspection of dimensions.

This inspection shall be conducted by measuring instrumentation, gauges, patterns manufactured specially for this purpose, and providing for the required accuracy.

Overall and moulded dimensions along with the fixed vertical position of the sockets in relation to the fixed base of lanterns and also sector angles and positions of screen bent flanges of lanterns are subject to mandatory control. The correct position of the axial line placed on the case of lanterns shall be checked.

3. Functioning test.

This shall be conducted at the test stand or photometer bench with a fitted indicator lamp brought into circuit at the rated supply voltage. In this case in all sector lights the limits of the horizontal angular sectors shall be checked, including the cut-off within 5 degrees limits (except for sidelights in the forward direction), and the marks adequately applied on the fore and aft centerline (CL) shall be inspected as well. This inspection may be coincident with lighting characteristics tests (refer to parag 4). As to all-round-lights, their proper electric assembly shall be inspected. Additionally, in all the lights the proper positioning of incandescent lamp filament in relation to the vertical and horizontal axes of lens or cylinder shall be checked.

4. Luminous characteristics tests.

Luminous characteristics tests of lanterns in laboratory conditions (refer to para 8) shall be carried out in accordance with the existing standards. In this case it is necessary that the requirements prescribed in 4.1 to 4.4 shall be met.

4.1 The curve of vertical light distribution at the rated supply voltage and 5 per cent reduced supply voltage shall ensure the following:

.1 luminous intensity not less than that prescribed in 3.1.7.1, Part III "Signal Means" of the Rules for the Equipment of Sea-Going Ships within the angles in vertical sector from 5 degrees above to 5 degrees below the horizontal plane;

.2 not less than 60 per cent of the prescribed luminous intensity within the angles in vertical sector from 7,5 degrees above to 7,5 degrees below the horizontal plane, and for lights of sailing ships, not less than 50 per cent of the prescribed luminous intensity within the range of visibility up to 25 degrees on either side from the horizontal plane.

4.2 The curve of vertical light distribution at the rated supply voltage and 5 per cent reduced supply voltage shall ensure the following:

.1 for all-round lights the minimal required luminous intensity shall be maintained over the arc of the horizon up to 360 degrees;

.2 for sternlights and masthead lights as well as for sidelights (within the sectors up to 22,5 degrees abaft) the minimum required luminous intensity shall be maintained over the arc of the horizon up to 5 degrees within the limits of the sectors prescribed for the appropriate light type;

.3 from 5 degrees within the prescribed sectors the intensity may decrease by 50 per cent up to the prescribed limits[1] of sectors; then it decreases gradually to reach practical cut-off at not more than 5 degrees outside the prescribed sectors;

.4 for sidelights the steady luminous intensity shall be maintained within the angular sector. In the forward direction, luminous intensities must decrease within the limits up to 3 degrees by means of afore inboard screens prescribed by the Rules for the Equipment of Sea-Going Ships (refer to Appendix 1 to Section 14, Guidelines on Technical Supervision of Ships under Construction).

4.3 Within the prescribed angular sectors the horizontal luminous intensity shall not have sudden changes of luminous intensities: the maximum luminous intensity and the minimum luminous intensity ratio shall not exceed 1,5.

4.4 Luminous transmissivity and colour specification of lights shall be checked in accordance with the existing standard. In this case the coordinates *x*, *y* shall lie inside the zones of the diagram prescribed in Part III "Signal Means" of the Rules for the Equipment of Sea-Going Ships.

5. Operational tests in the conditions of vibration and shaking shall be exercised under the norms and methods prescribed in Section 10.

6. Watertightness tests shall be carried out by water spraying (refer to 4.1, Appendix 2). During these tests the current-carrying parts in the electric lights, or chimney and other parts affecting the operation of the oil lanterns shall be prevented from getting into contact with water when such lights are being sprayed. Electric lights shall be of watertight design (IP56) and also shall comply with the requirements prescribed in Section 10.

7. The operational tests shall be conducted at variations of ambient temperature from +45 to –30 °C, and lights intended for ships of ice category **Arc5** and above shall be adapted to operate at a negative temperature down to –40 °C.

8. Anticorrosion and seawater resistance tests of lights shall be carried out under the norms and methods prescribed in Section 10. The product is considered to have passed the test if no traces of corrosion are found and insulation resistance on tcompletion of the test is not less than 1 MOhm.

9. Thermal resistance test shall be performed under the norms and methods prescribed in Section 10.

10. Humidity resistance test shall be performed under the norms and methods prescribed in Section 10.

---

1 It is an allowed/admitted reduction of luminous intensity (and not obligatory one) is meant.

11. Operational tests in the conditions of heeling and trimming shall be performed under the norms and methods prescribed in Section 10.

12. When determining resistance of insulation electric chains of lights and when testing insulation electrical strength of lights the norms and methods shall be followed as prescribed in Section 10.

13. Operational check of lights with variations for long periods from the rated supply voltage and frequencies within the limits as specified by Rules for the Equipment of Sea-Going Ships suggests that lights shall provide the range of visibility required by the Rules. Such a check shall be coincident with luminous characteristics tests (refer to paragraph 4) and full-scale tests.

14. Wind velocity tests of oil lights shall be performed with wind velocity up to 30 m/s.

15. Burning durability of oil lights shall be checked continuously during 16 h with burning lamp. In this case the lamp oil volume shall be such as to maintain that durable burning. In the course of testing the luminous intensity shall be determined regularly, but not less than once per 1 h.

APPENDIX 2

BENCH TESTS OF PROTOTYPE SOUND SIGNAL MEANS

1. External survey of sound signal means is expected to be conducted during external inspection with the purpose of ascertaining their conformity with the technical documentation approved.

Material quality intended for the product shall be certified by the firm's (manufacturer's) Certificate. Parts and the product itself shall undergo an external inspection with no application of magnifying devices. Prior to the assembly of the product, all the parts shall be thoroughly cleaned from rust, scale, conservation, etc. Weld joints, unevenness shall be grinded, sharp edges shall be made blunt. The surfaces of interfaced parts, as well as sealed surfaces shall have no chippings, scratches, marks or any other defects.

With agreement of the Register, the removal of surface defects not affecting the serviceability of signal means may be admitted.

2. The product design, dimensions, mass, surface unevenness, allowances, etc. shall comply with the requirements of the technical documentation.

Casting parts (or the product itself) shall be tested by striking in the hanging position by means of devices specified in the technical documentation so as to define (as per sounding tones) any cracks, cavities/pits, lamination, etc. If a part of the product (or the product itself) shall be strength or leak tried, it shall be subjected to hydrostatic P_{st} pressure tests in accordance with the requirements stated in the technical documentation. The structure is considered to have passed the test unless under constant pressure during the period required for inspection any drops, leakage, sweat, etc. are found.

3. Operational tests in vibration and shaking conditions shall be carried out under the norms and methods prescribed in Section 10.

4. Tests of sound signal means:

.1 for watertightness tests, the sound signal means similarly is positioned aboard like in service and during 5 min is water spray hosed, hole diameter 25 mm, distance 5 m, water pressure 0,8 Pa. Thereafter the sound signal means shall be dried, opened up and inspected. The product is considered to have passed the test unless there is water found out inside the case;

.2 for reliable operation:

at high and low temperatures of ambient air when testing in working conditions and temperature cycling up to +55 °C during 10 h and down to –30 °C during 6 h, and also in idling conditions at – 50 °C during 2 h;

for heeling and trimming conditions. The sound signal means shall be tested in working conditions and normal climatic conditions and also in two inter-perpendicular normal operating positions. Heeling and trimming tests of signal means need not be conducted in case they have passed single component bench striking tests in three inter-perpendicular positions. In all cases of the tests the trim shall not be less than 10°;

with rolling-and-pitching motion consequently in two inter-perpendicular positions with the ultimate heeling angle up to 45°, trimming 10°, heeling amplitude 7–9 s, duration not less than 5 min in each position;

with maintenance consequently in two inter-perpendicular positions, heeling angle up to 45°, trimming 10°, duration not less than 3 min in either position;

.3 for anticorrosion resistance under the norms and methods prescribed in Section 10. The product is considered to have passed the test if no traces of corrosion are found and insulation resistance on the completion of the test is not less than 1 MOhm;

.4 for thermal resistance under the norms and methods prescribed in Section 10. In this case the heating temperature shall be checked after the signal means has operated for 30 min in the cycling as follows: 10 s as "switched on" and 5 s as "switched off'.

5. Determination of ranges of fundamental frequencies and sound pressure level.

5.1 Acoustics tests of sound signal means in laboratory conditions shall be carried out at specially equipped bench. Locations of the products tested shall be adequately specified and correspond to their positioning in the conditions of free sound field. The instruments characteristics shall meet the requirements of the Rules for the Equipment of Sea-Going Ships.

5.2 Sound pressure level shall be measured at the prescribed sound pressure level (on the forward axis) and at octave band levels with geometric average frequencies as follows: 63, 125, 250, 500, 1000 and 2000 Hz, and in the determination of frequencies in the bandwidth (3 or 6 per cent) in the particularly specified range 50 to 2000 Hz with the help of sound level meters, filters and analyzers.

The emission direction is estimated according to both the generally prescribed level and activated bands levels in the horizontal plane under all round characteristics.

5.3 When estimating the sound level intensity on the supporting radius equal to 3, 5 and 10 m the estimated results shall be reduced down to the 1 m supporting radius.

5.4 During the bench tests of the prototype signal means a signal means' full characteristics in accordance with those prescribed in 5.2 shall be received. In this case the general level and tonality of the product tested shall meet the requirements contained in the technical documentation approved by the Register.

The level of sound pressure level and frequencies range of a bell and gong shall be estimated as to the conformity and in the scope of the requirements prescribed in the Rules for the Equipment of Sea-Going Ships.

6. The electric equipment of whistles shall be subjected to the measurement of insulation resistance, check of insulation electrical strength and prevention from getting into contact with current carrying parts (refer to Section 10). The extent of protection of closed type sound signal means, as well as sound signals means with starting valve electric-magnetic drive shall be in accordance with those prescribed in IP56.

Additionally, the sound signal means shall be tested in the full extent of people's prevention from getting into contact with parts under voltage or moving parts inside the hull.

7. The system of withdrawal of condensation shall be surveyed under the methods specified in the technical documentation for each whistle type.

APPENDIX 3

BENCH TESTS OF PROTOTYPE PYROTECHNIC SIGNAL MEANS

Bench tests shall include the following.

1. External inspection.

This is a visual survey of pyrotechnic means as to their conformity with the approved technical documentation.

2. Check of dimensions and mass.

Pyrotechnic signal means shall be measured by an universal gauge and thereupon weighted.

3. Determination of luminous intensity, light colour and burning time.

The luminous intensity shall be tested in a photographic camera.

A star shall be fixed on the stand vertically, with the igniter composition upward, and shall be burned by an electric coil switched on with rated supply voltage 24 to 36 V or with the help of safety fuse.

Air flow rate in the burning area shall be about 1 to The star's burning time measured by two timing devices with value divisions of 0,2 s shall be not less than that prescribed in Part III "Signal Means" of the Rules for the Equipment of Sea-Going Ships.

When red light hand flares are to be tested, the length of colour wave shall be estimated which length is expected to be within 602 to 607 N/m, with flame saturation not less than 85 per cent.

4. Temperature cycling tests.

4.1 Pyrotechnic means shall be subjected to ambient temperature cycling – 30 °C and +65 °C repeated 10 times in succession, and thereafter they shall function properly.

.1 endurance in the thermal chamber at temperatures of 65±2 °C during 8 h;

.2 specimens are withdrawn from the thermal chamber on the same day and maintained exposed in the ambient conditions until the next day;

.3 endurance in the freezing chamber at temperatures of – 30±2 °C during 8 h;

.4 specimens are withdrawn from the freezing chamber on the same day and maintained exposed in the ambient conditions until the next day.

4.2 Pyrotechnic means are endured at the freezing chamber during at least 48 h at temperatures of −30±2 °C, and thereafter they shall function properly at these temperatures.

4.3 Pyrotechnic means are endured in the thermal chamber during not less than 48 h at 65±2 °C, and thereafter they shall function properly at these temperatures.

4.4 Pyrotechnic means are endured in the thermal chamber of 65±2 °C, and relative humidity 90 per cent during at least 96 h, and thereupon at temperatures of 20 to 25 °C and relative humidity 65 per cent during 10 days, and thereafter they shall function efficiently.

5. Antycorrosion and moisture resistance tests.

Each pyrotechnic means shall function properly after the following:

.1 immersion in water during 24 h under 1 m;

.2 immersion in water during 5 min under 10 cm when a means of ignition is ready for use;

.3 influence of sprayed salt water (5 per cent solution of sodium chloride) at temperature of +35±3 °C during at least 100 h.

6. Safety of operation test.

6.1 Each pyrotechnic means shall be at first fired vertically, and thereafter horizontally from the altitude of 2 m down to a steel platform of 6 mm thick cemented into the concrete floor. On the completion of this test the pyrotechnic means shall operate properly.

6.2 Each pyrotechnic means shall be tried in operation in accordance with the firm's (manufacturer's) instructions so as to ascertain that it is so designed as not to cause discomfort or injury to the person holding the casing, or to people nearby.

7. Tests of hand flares.

7.1 A hand flare shall be tried in operation with a burning period of at least 1 minute. Having burned for 30 s, it shall be immersed in water for 10 s under 100 mm, and thereafter it is to continue to be burning during at least 20 s.

7.2 A hand flare shall be tried in operation at a distance of 1,2 m above a testing square platform with its side equal to 1 m, containing 2 liters of heptane positioned above a layer of water. The test shall be conducted at a temperature within 20 to 25 °C. On the complete combustion of hand flare the heptane shall not ignite due to the hand flare effect or materials therefrom.

8. Test of buoyant smoke signals.

8.1 After passing the test in accordance with the requirements prescribed in 4.1, a smoke buoyant signal shall operate properly in sea water with a temperature of 71 °C, and the second one with a temperature of +30 °C. After 1 min after beginning to emit smoke the buoyant smoke signal shall be completely submerged in water for at least 10 s. The smoke shall not stop emitting both during the submersion, and thereafter. Total time of smoke emission shall be equal to at least 3 min, and in the event of automatically operated buoyant smoke signal, at least 15 min.

8.2 A buoyant smoke signal shall operate in water under a hectane layer of 2 mm thick not causing ignition.

8.3 When the smoke is passing through the tube of 18 cm in diameter with the help of the blower providing air intake of 18,4 m^3/min, the light impairment (due to the smoke) at the outlet shall not exceed 30 per cent.

9. Transportability test.

Hand flares shall be tested for transportability while shaking at the bench with 60 impacts per minute during 30 min, and additionally throwing down from the altitude not less than 15 cm. The remaining pyrotechnic means shall be tested for transportability at the specially designed testing bench during 1 h and under special conditions. In the course of transportability tests some local damages to the surface coating of hand flares may be admitted.

APPENDIX 4

FULL SCALE SEA TESTS OF PROTOTYPE LANTERNS

Full scale sea tests of prototype lanterns shall contain the check of range and sectors of visibility of lanterns installed aboard. These tests shall be carried out under the program approved by the Register.

APPENDIX 5

FULL SCALE SEA TESTS OF PROTOTYPE SOUND SIGNAL MEANS

1. Prior to the full scale tests of prototype sound signal means, checking tests shall be carried out on the supporting radius of the prescribed sound pressure levels and octave band levels.

1.1 Full scale sea tests of prototype sound signal means shall be carried out in the water area adequately distant from the shore facilities which are likely to impair the sound propagation. The tests shall be performed at the day time in favourable weather conditions, that is, fair weather and wind force of not more than 3 m/s in the ship's heading direction. The background noise at the ship's posts in the direction of maximum sound intensity in the conditions of still air weather shall be not more than that specified in the Rules for the Equipment of Sea-Going Ships.

1.2 Measurements of both the prescribed sound pressure level and the sound pressure in octave band levels shall be defined in the direction of maximum sound intensity in the specified sector and in appropriate distances. In this case the signal level shall be not less than 5 dB above the noise background. The measurements shall be performed at least three times.

1.3 When determining sound pressure levels, the subjective listening estimation by inspectors shall be conducted. In the course of listening nothing shall affect the sound signals listening subjectivity of inspectors. No doubling of sound signals is allowed. The listening procedure shall be performed at least three times.

2. The sound pressure level of a directional whistle shall not exceed 4 dB below the prescribed sound pressure level on the axis at any direction in the horizontal plane within +45 degrees of the axis (right ahead direction). The sound pressure level at any other direction in the horizontal plane shall be not more than 10 dB below the prescribed sound pressure level on the axis. Sound pressure levels shall be measured on the supporting radius over the arc at angles of 0° to 45° on either side accordingly, in all other directions in the horizontal plane the change of the sound pressure level as compared to the level on the main direction shall not exceed 10 dB.

3. Sound duration shall be determined by impulse noise meters in the direction of maximum sound intensity on the supporting radius. The probability of providing a short sound (about 1 s long) and long sound (4 to 6 s long) shall be tried at least three times.

The prescribed sound pressure level, at 1 m audibility range, shall not be below than that specified in the technical specifications for the whistle, and to change by more than 1 dB in case of a long signal. Clear sounding is defined by analyzing the sound signal in accordance with 5.2, Appendix 2.

Whistles shall be tested during 2 h in case of manual control, and during 12 h in case of automatic control; and their sounding characteristics shall remain within admitted limits.

APPENDIX 6

FULL SCALE PROTOTYPE TESTS OF PYROTECHNIC SIGNAL MEANS

1. The altitude and descent of pyrotechnic signal means shall be determined by devices specially designed for the purpose (for example, by a teodolite meter), the altitude of rockets extinguishing shall be at least 50 m. The rate of descent of rocket parachute flares shall be at least 5 m/s. A parachute rocket shall operate reliably when fired at an angle of 45 degrees.

2. The burning time shall be determined at full scale tests. The time of functioning shall be measured by timing devices with the scale graduation value of 0,2 s, and it shall be at least like that specified in Table 3.5, Part III "Signal Means" of the Rules for the Equipment of Sea-Going Ships.

3. Determination of range of audibility.

The range of audibility of rockets or shells shall be determined over sea surface at wind force up to 1 and clear atmosphere and at background noise of at least 45 dB by devices specially designed for this purpose and approved by the Register.

4. The buoyant smoke signal means shall be tested in heavy seas of at least 300 mm high. It shall operate properly during at least 3 min.

5. Comfort and reliability in handling.

All the procedures to operate pyrotechnic signal means shall be performed in accordance with the firm's (manufacturer's) operational instructions and regulations.

When conducting full scale tests of pyrotechnic signal means, special attention shall be drawn to the following:

.1 comfort, reliability and safety of application in any meteorological conditions (rain, wind);

.2 reliable ignition of hand flare;

.3 hand flare burning which shall burn uniformly under the conditions of wind, rain, and with no explosions and no slag in quantities impairing the burning process. The heating of hand flare handle shall not exceed 40 °C.

APPENDIX 7

SURVEYS AND TESTS OF LANTERNS AT THE MANUFACTURER'S WITH SERIAL PRODUCTION

Surveys and tests of lanterns shall include the following:

.1 external inspection (refer to item 1 of Appendix 1);

.2 check of dimensions and mass (refer to item 3 of Appendix 1);

.3 tests of functioning (refer to item 4 of Appendix 1);

.4 check of interchangeability of parts and units (possibility of rapid change of electric and oil lamps, possibility of inserting a lamp oil lantern with its chimney fitted);

.5 check of efficient securing and fitting of outboard basic and spare lanterns;

.6 watertightness tests (refer to item 4 of Appendix 1);

.7 check of insulation electrical strength of lanterns (refer to item 12 of Appendix 1);

.8 measurement of resistance of insulation of electric circuits of lanterns (refer to item 12 of Appendix 1).

APPENDIX 8

SURVEYS AND BENCH TESTS OF SOUND SIGNAL MEANS AT THE MANUFACTURER'S WITH SERIAL PRODUCTION

Surveys and bench tests of sound signal means shall include the following:

.1 external inspection, check of dimensions and mass, interchangeability of parts and units, etc.;

.2 check of prescribed level and levels of sound pressure of each product in octave band frequencies. Characteristics shall meet the requirements of the technical documentation approved by the Register. Admitted allowance is ±1 dB;

.3 check of compliance of the range of fundamental frequencies (tonality) with that specified in the technical documentation by way of narrow band analysis of sound signals. Admitted allowance is ±1 per cent;

.4 electric equipment of sound signal means shall be subjected to measurement of insulation resistance (refer to item 6 of Appendix 2).

15 RADIO EQUIPMENT

15.1 GENERAL

15.1.1 The provisions of this Section apply in technical supervision of the radio equipment specified in the RS Nomenclature.

15.1.2 The Section establishes the procedure, scope and methods of the Register supervision during manufacture of radio equipment at the firm (manufacturer).

15.1.3 General provisions on the arrangement of technical supervision during manufacture of radio equipment for ships are set forth in Part I "General Regulations for Technical Supervision", on technical documentation - in Part II "Technical Documentation".

15.1.4 Radio equipment shall be supplied for the ship together with the documents in accordance with the RS Nomenclature.

15.2 TECHNICAL SUPERVISION FOR TYPE APPROVAL OF THE PRODUCT

15.2.1 The following stages of technical supervision shall be provided for type approval of the products:

.1 review and approval of technical documentation for the product specified in 1.3.4, Part IV "Radio Equipment" of the Rules for the Equipment of Sea-Going Ships;

.2 review and approval of test program;

.3 performance of surveys and tests;

.4 drawing up of technical supervision results (Form 6.3.18) and issuing the RS Type Approval Certificate (CTO) for the product (Form 6.8.3).

15.2.2 Review of technical documentation shall be carried out for check of the product compliance with the applicable requirements of the RS rules, appropriate IMO resolutions, other ND to be specified in the RS Type Approval Certificate (CTO).

The product shall be subjected to the full list of tests resulting from the requirements of RS rules, IMO resolutions, other ND. Types, test procedures and required results are given in the appropriate IEC and ISO standards. The results of previous tests may be taken into account. Test program specified in 15.2.1.2 determines the types and methods of tests to be carried out in the presence of the RS surveyor. Test program may include both bench tests and full scale or shipboard tests of the product.

Survey of the product shall be conducted for determining its compliance with the approved technical documentation, applicable RS rules, appropriate IMO resolutions, other ND to be specified in the RS Type Approval Certificate (CTO).

15.2.3 When required by the Register, the radio equipment pilot specimens may be subjected to operational tests on board a ship, if they are of radically new design and were not previously used on board a ship, or cannot be adequately checked on the test bed.

15.3 SCOPE OF SURVEYS OF SERIAL PRODUCTS AT ESTABLISHED PRODUCTION

15.3.1 Technical supervision during manufacture of radio equipment items at a manufacturer's with established production shall be carried out by surveying each finished product providing for:

.1 checking the product compliance with the data specified in the RS Type Approval Certificate (CTO), checking the documents of the competent bodies confirming the product conformity with the special requirements (intrinsic safety, etc.);

.2 checking the completeness of the product and technical documentation;

.3 external inspection;

.4 checking product functioning;

.5 checking and testing the product to determine its performance and parameters, when the survey of equipment is carried out at production site;

.6 testing in the scope specified in effective documents on the product;

.7 checking spare parts (where applicable);

.8 issuing for products the Register documents prescribed by the technical supervision type established.

15.3.2 To surveying, shall be submitted the final products that have passed all the checks and tests conducted by the technical control body of the firm (manufacturer).

15.4 GENERAL INSTRUCTIONS ON SURVEYING OF SERIAL PRODUCTS AT ESTABLISHED PRODUCTION

15.4.1 Depending on the production process used at the firm (manufacturer), to be submitted for surveying are individual specimens of fully completed products or of their batch.

15.4.2 The presence of metrological documents for devices, apparatus, testing equipment, and the like intended for checking and testing products during the survey shall be ascertained.

15.4.3 For two-way VHF radiotelephone apparatus, as well as for radar transponders, AIS-transmitters of life-saving appliances and radio beacons, the presence of instructions for their activating by untrained personnel on the case of each kind of the equipment shall be checked.

15.4.4 The completeness shall be checked for compliance with data specified in the RS CTO.

In visual examination, the product conformity with the requirements of the Rules for the Equipment of Sea-Going Ships shall be verified. Presence of marking that indicates the manufacturer, type, serial number, safe distance of magnetic compass installation (where applicable) and other data pertinent for the particular kind of equipment.

15.5 SURVEYING SINGLE KINDS OF SERIAL PRODUCTS OF RADIO EQUIPMENT AT ESTABLISHED PRODUCTION

15.5.1 In addition to general inspections, checks, tests and measurements of radio equipment, the following checks of single kinds of radio equipment devices and systems given below can be carried out.

15.5.2 In the survey of transmitters being separate or combined radio transmitting devices or a part of radio stations, depending on their purpose, the following can be checked:

.1 operation on fixed frequencies, over separate bands;

.2 operation using different classes of emission;

.3 operation for the standard artificial aerial;

.4 operation of tuners over the given range of aerial parameters and the power delivered to a standard artificial aerial. The transmitter shall be readily tuned over all bands to all the aerials having specified parameters; in this case, the power values shall be within the limits specified in the technical documentation;

.5 operability of transmitters in simulating the open-circuiting of an aerial or its fault to frame.

15.5.3 In the survey of receivers being separate ones or a part of radio stations, depending on their purpose, the following can be checked:

.1 correspondence of a frequency range;

.2 accuracy of frequency setting;

.3 sensitivity in the modes of receiving H3E, J3E, F1B or J2B (G3E, G2B for VHF) emissions, specified in the technical documentation over all bands;

.4 attenuation of sensitivity of the adjacent channel, intermediate frequency, image channel and other parameters;

.5 bandwidth of audio frequencies in all the modes of radiotelephone transmissions reception;

.6 presence and values of clipping in radiotelephone modes of operation.

15.5.4 In the survey of automatic matching aerial devices integrated in transmitters or fitted as separate units, the following can be checked and tested:

.1 functioning of the matching device over all the transmitter bands specified and on all the aerials specified. Such checks may be carried out using an artificial aerial;

.2 measurement of time to tune and retune of the matching device, when shifting to another frequency of a transmitter;

.3 presence and functioning of indication of transmitter availability for operation, wrong tuning, etc.;

.4 availability in the matching device of an opportunity to connect a transmitting aerial, an aerial commutator, a receiving aerial; their earthing and isolation;

.5 the minimum value of aerial insulation resistance wherein the matching device automatically prevents transmitter tuning and which shall not exceed 1 MOhm.

15.5.5 In the survey of supply devices making parts of radio equipment products, both integrated in the common structure of the product or being separate units of those products, the following can be checked:

.1 presence of electric protection devices and their conformity with rated values of voltage and current;

.2 functioning of commutators of supply switching on and off;

.3 functioning of the visual indication of "ON – OFF" positions;

.4 presence of devices for measuring voltage and current, and their functioning on measuring (continuously, casually, selectively) the parameters under control;

.5 temperature of the most heated parts after lengthy functioning under load;

.6 power demanded from an electric power source;

.7 insulation resistance of input circuits, and protective and switching devices fitted therein;

.8 insulating strength of supply sources of up to 24, 220 and 380 V when tested at a voltage of 500, 1000 and 1500 V respectively, and absence therewith of breakdowns, new formations and discharges;

.9 operability of the radio equipment with the variation of a supply voltage by ± 10 % and a current frequency by ± 5 % from rated values;

absence of self excitation and generation of parasitic oscillations;

absence of ac potential components at the rectifiers output;

.10 operability of the radio equipment designed for battery supply at a voltage reduced by 10 % and increased by 30 % of the rated one respectively.

15.5.6 In the survey of transmitters, receivers, supply devices, automatic devices for generating alarm signals, automatic matching aerial devices, remote control panels and other units being part of the radio station set, in addition to the checks specified in 15.5.2 to 15.5.5 the following can be checked:

.1 presence of an opportunity to control radio stations both directly and using a remote control panel, if available;

.2 communication both from the radio station location and via a remote control panel, if available;

.3 presence of a device for earthing and isolating of aerials connected to the radio station;

.4 radio station functioning on simplex and duplex channels.

15.5.7 In the survey of command broadcasting equipment, the following can be checked:

.1 priority of loudspeaking and command broadcasting in transmitting general radio broadcasting;

.2 remote start system;

.3 operability when supplied from a transitional emergency source of electrical power, if any.

15.5.8 In the survey of the GMDSS VHF radio installation, the following can be checked:

.1 categories of calls using both telephony and digital selective calling (DSC), as well as the availability of communication in the telephony mode for the purposes of:

distress, urgency and safety;

ship operational requirements;

public correspondence;

.2 in the survey of the radiotelephone station of the VHF radio installation, the following can be checked and tested:

.2.1 operability:

in the band 156 to 174 MHz using G3E (radiotelephone channels) and G2B (DSC channel 70) type emissions;

within the frequency range 156,3 – 156,875 MHz on simplex channels;

within the frequency range 156,025 – 156,875 MHz for transmission and

within the frequency range 160,625 – 162,025 MHz for reception on duplex channels;

.2.2 the maximum deviation of frequency not exceeding ± 5 kHz at a depth of modulation 100 %;

.2.3 frequency modulation precorrection of 6 dB per octave;

.2.4 audio frequency bandwidth not exceeding 3000 Hz;

.2.5 operation on a vertically polarized aerial;

.2.6 rated power of a transmitter not less than 6 W and not more than 25 W;

.2.7 the mean power of any spurious emission due to modulation products at any other channel of the International Maritime Mobile Service not exceeding a limit of 10 μW, and

the mean power of any other spurious emission at any discrete frequency of the International Maritime Mobile Service band not exceeding the limit of 2,5 μW;

.2.8 sensitivity of the receiver for a signal-to-noise ratio of 20 dB, which shall be equal to or better than 2 μV EMF;

.2.9 automatic switching off the loudspeaker during duplex operation;

.2.10 change of channels within 5 s, and change from transmission to reception and vice versa within 0,3 s;

.2.11 manual volume control of the receiver;

.2.12 sufficiency of the receiver bandwidth for receiving a signal with the maximum frequency deviation of +5 kHz in the high (intermediate) frequency at a level of 6 dB;

.2.13 non-linear distortion factor of the receiver which shall not exceed 7 %;

.2.14 adjacent channel selectivity of the receiver which shall be at least 75 dB;

.2.15 intermodulation selectivity of the receiver which shall be at least 70 dB;

.2.16 automatic transition from simplex to duplex operation and vice versa in the transition to the corresponding channels;

.3 in the survey of the radiotelephone station having multichannel watch (scanning) facilities, the following can be checked:

scanning characteristics:

scanning the priority channel with a frequency of not less than once per 2 s;

holding the receiver on the priority channel during all the time of signal duration;

interrupting the signal reception on the additional channel for not longer than 150 ms while continuing the scan on the priority channel;

duration of each listening period on the additional channel which shall be at least 850 ms in the case when a signal is not received on the priority channel, but is received on the additional one;

indicating the channel on which a signal is being received.

15.5.9 In the survey of the GMDSS MF radio installation, the following can be checked:

.1 categories of calls using both radiotelephony and digital selective calling, as well as the availability of communication in the radiotelephony mode for the purposes of:

distress, urgency and safety;

ship operational requirements;

public correspondence;

.2 operability of the transmitter within the frequency range of 1605 ─ 4000 kHz with at least two operating frequencies: 2182 and 2187.5 kHz;

.3 transmitter operation with emission classes J3E, H3E and J2B or F1B;

.4 stability of a frequency within 10 Hz of the set one after the transmitter warm up;

.5 peak envelope power with normal modulation and emission class J3E, or the mean power with emission class J2B or F1B which shall be at least 60 W;

.6 operability on the frequencies 2182 and 2187.5 kHz within a minute after switching on the radio installation;

.7 continuity of the transmitter operation at the rated power;

.8 discrete or continuous tuning of the receiver in the frequency range 5 ─ 4000 kHz;

.9 receiver operation with emission classes J3E, H3H, J2B and F1B;

.10 frequency deviation of the receiver within 10 Hz of the frequency required;

.11 sensitivity of the receiver for emission classes J3E and F1B which shall be at least 6 mV at the receiver input for a signal-to-noise ratio of 20 dB;

.12 receiver power which shall be at least 2 W to a loudspeaker and at least 1 mW to a handset;

.13 adjacent channel selectivity of the receiver which shall be at least 60 dB when tuning away an interference by +6 kHz;

selectivity on spurious channels which shall be at least 80 dB;

intermodulation selectivity relative to 1 μV which shall be at least 70 dB;
non-linear distortion factor of the receiver which shall not exceed 7 per cent;

.14 decoding and encoding DSC formats and their composing, automatic erasing of those messages in 48 h after their reception;

.15 sufficiency of memory capacity for storage in the DSC facility of at least 20 distress alerts received when these are not immediately printed out, automatic erasing of those alerts in 48 h after their reception;

.16 opportunity to control the radio installation from an integral or remote control panel(s) (priority shall be given to the control panel at the conning position);

.17 opportunity to prepare and transmit distress alerts and safety calls, and to provide communications related to distress and safety from the conning position;

.18 immunity to inadvertent use of the means for transmitting distress alerts;

.19 operation of the radio installation control system:
switching on the DSC distress alert (prioritized regarding other kinds of operations);
acknowledgement of DSC distress alert reception;
DSC distress alert relay;
switching on the frequencies 2182 and 2187.5 kHz;
automatic selection of the emission class J3E when switching to the frequency 2182 kHz;
automatic selection of the emission class J2B or F1B when switching to the frequency 2187,5 kHz;

.20 changing emission classes with one control;

.21 independence of receiver and transmitter frequency setting;

.22 opportunity to manually input the ship's position and the time of its determination;

.23 absence of unwanted emissions in use of controls;

.24 presence of indication in clear for understanding form for the DSC formats received and being entered;

.25 presence of the fixed manually-acknowledged audible and visual alarm indicating the receipt of a distress alert or an urgency call. Opportunity of checking the alarm;

.26 indication of transmission and reception frequencies;

.27 storage in the DSC facility memory of self-identification data, and lack of an opportunity to readily change them;

.28 availability of means for checking the DSC facility without signal emission;

15.5.10 In the survey of the GMDSS MF/HF radio installation, the following can be checked:

.1 categories of calls using both radiotelephony and digital selective calling, as well as provision of radiocommunications in the mode of radiotelephony and NBDP for the purposes of:
distress, urgency and safety;
ship operational requirements;
public correspondence;

.2 operation of the transmitter within the frequency range of 1605 kHz to 27,5 MHz;
availability of at least 18 operating frequencies:
for radiotelephony – 2182; 4125; 6215; 8291; 12290 and 16420 kHz;
for NBDP – 2174.5; 4177.5; 6268; 8376.5; 12520 and 16695 kHz;
for DSC – 2187.5; 4207.5; 6312; 8414.5; 12577 and 16804.5 kHz;

.3 transmitter operation with emission classes J3E, H3H, J2B and F1B;

.4 stability of a frequency within 10 Hz of the set one after the transmitter warm up;

.5 peak envelope power with normal modulation and emission class J3E, or the mean power with emission class J2B or F1B which shall be at least 60 W;

.6 opportunity to reduce the output power down to 400 W or less if the mean output power exceeds 400 W;

.7 operability on the frequencies 2182 and 2187.5 kHz within a minute after switching on the radio installation;

.8 continuity of the transmitter operation at the rated power;

.9 discrete or continuous tuning of the receiver in the frequency range of 1605 kHz ─ 27.5 MHz, or the combination of these, or use of the receiver tuned to the fixed frequencies numbered at least 18;

.10 receiver operation with emission classes J3E, H3H, J2B and F1B;

.11 stability of a frequency within 10 Hz of the set one after the transmitter warm up;

.12 sensitivity of the receiver for emission classes J3E and F1B which shall be at least 6 mV at the receiver input for a signal-to-noise ratio of 20 dB;

.13 receiver power which shall be at least 2 W to a loudspeaker and at least 1 mW to a handset;

.14 adjacent channel selectivity of the receiver which shall be at least 60 dB when tuning away interference by +6 kHz;

selectivity on spurious channels which shall be at least 80 dB;

intermodulation selectivity relative to 1 μV which shall be at least 70 dB;

non-linear distortion factor of the receiver which shall not exceed 7 %;

.15 decoding and encoding DSC formats and their composing;

.16 sufficiency of memory capacity for storage in the DSC facility of at least 20 distress alerts received when these are not immediately printed out;

.17 scanning all the DSC distress channels selected within not more than 2 s with the time of watching on each channel sufficient for detecting a sequence of dots preceding each DSC. End of scanning when dots transmitted at a speed of 100 Baud are detected;

.18 operation of the radio installation control system:

switching on the DSC distress alert (prioritized regarding other kinds of operations);

acknowledgement of DSC distress alert reception;

switching on the frequencies 2182 and 2187.5 kHz;

automatic selection of the emission class J3E when switching to the frequency 2182 kHz;

DSC distress alert relay;

automatic selection of the emission class J2B or F1B when switching to the DSC and NBDP distress and safety frequencies;

changing emission classes with not more than one control;

opportunity to independently set receiver and transmitter frequencies;

manual input of the ship's position and the time of its determination;

.19 absence of unwanted emissions in use of controls;

.20 presence of an audible and visual alarm activating after the receipt of a distress alert or an urgency call, or the call of a distress category; possibility to manually acknowledge the alarm;

.21 indication of transmission and reception frequencies;

.22 storage in the DSC facility memory of self-identification data, and lack of an opportunity to readily change them;

.23 means for periodical checking the DSC facilities without signal emission;

15.5.11 In the survey of the DSC INMARSAT ship earth station, the following can be checked:

.1 call categories;

.2 transmission and reception of distress priority calls;

.3 watching shore-to-ship distress alerts including those addressed to certain geographical areas;

.4 transmission and reception of general radiocommunications (in the mode of direct-printing telegraphy or telephony);

.5 an opportunity to transmit the distress alert from the conning position, as well as from any other place allocated for that purpose; protection against the inadvertent use of means for transmitting the distress alert;

.6 absence of a need to repeatedly manually force the equipment into the operating mode, of a loss of messages received and being stored in the memory in the case of the transition from one power supply to another or of any break in electric power supply within up to 60 s;

.7 availability of a self-checking system, and automatic activating an audible and/or visual alarms in the case of:

satellite tracking loss by an aerial;

failure of ship earth station operability;

loss of power supply or starting a stand-by source of power.

15.5.12 In the survey of the NAVTEX service receiver, the following can be checked:

.1 operability on the frequency 518 kHz and additional frequencies of the national NAVTEX service (490 kHz, 4209.5kHz);

.2 operability of the receiver, signal processing device, output device of the information received;

.3 storage of at least 200 message identities. Automatic erasing the message identity from the memory of the equipment on expiry between the 60th and 72nd h. Automatic erasing the oldest message when the number of received messages exceeds the memory capacity.

.4 storage of correctly received messages only (i.e. the error ratio per character is lower than 4 %);

.5 activating an alarm when receiving search and rescue messages;

.6 keeping the information on the areas covered by the service and on the types of messages stored in the equipment memory within 6 h after the supply voltage failure;

15.5.13 In the survey of the COSPAS-SARSAT satellite Emergency Position-Indicating Radio Beacon (EPIRB), the following can be checked:

.1 EPIRB operation on the frequency 406 MHz using G1B class of emission without using the satellite system;

.2 EPIRB operation on the frequency 121.5 MHz (for homing);

.3 operation of the light beacon;

.4 availability of documents confirming the check of a releasing arrangement.

15.5.14 In the survey of the search and rescue locating device, the following can be checked and tested:

.1 device operation;

.2 presence of means to prevent inadvertent activation;

.3 manual activation and deactivation;

.4 indication of a stand-by condition;

15.5.15 In the survey of the two-way VHF radiotelephone apparatus, the following can be checked and tested:

.1 operation on the frequency 156,800 MHz (channel 16) and at least on one additional channel (channel 6 (156.3 MHz); channel 13 (156,65 MHz);

.2 emission class G3E;

.3 determining channel 16 selection in all ambient light conditions;

.4 minimum output power of a transmitter 0,25 W;

.5 device for reducing power down to 1 W or less if the output power of the transmitter exceeds 1 W;

.6 sensitivity of a receiver which shall be equal to or better than 2 μV EMF for a SINAD ratio of 12 dB;

.7 availability of a brief operating instruction and an expiry date for the primary battery;

.8 availability for service in 5 s after switching on.

15.5.16 Additional checks and tests of radio equipment of other kinds excepting those listed in 15.5.2 — 15.5.15 are specified during the review of technical documentation including test programs. In all cases, their scope shall be sufficient for assessing its fitness for use according to its purpose.

15.6 RS DOCUMENTATION

15.6.1 With the positive results of radio equipment product prototypes surveys, as specified in 15.2, and the tests (if planned) on board the ship carried out, CTO shall be issued for products according to Section 6, Part I "General Regulations for Technical Supervision".

15.6.2 With the positive results of radio equipment serial products surveys at steady production, as specified in 15.3 — 15.5, for each product (or batch) the documents shall be issued according to Section 7, Part I "General Regulations for Technical Supervision".

16 NAVIGATIONAL EQUIPMENT

16.1 GENERAL

16.1.1 The provisions of this Section apply in technical supervision of the navigational equipment specified in the RS Nomenclature.

16.1.2 The Section establishes the procedure, scope and methods of the Register supervision during manufacture of navigational equipment at the firm (manufacturer).

16.1.3 General provisions on the arrangement of technical supervision during manufacture of navigational equipment for ships are set forth in Part I "General Regulations for Technical Supervision", on technical documentation - in Part II "Technical Documentation".

16.1.4 Navigational equipment shall be supplied to the ship together with the documents in accordance with the RS Nomenclature.

16.2 TECHNICAL SUPERVISION FOR TYPE APPROVAL OF THE PRODUCT

16.2.1 The following stages of technical supervision shall be provided for type approval of the products:

.1 review and approval of technical documentation for the product specified in 1.3.4, Part V "Navigational Equipment" of the Rules for the Equipment of Sea-Going Ships;

.2 review and approval of test program;

.3 surveys and tests;

.4 drawing up of technical supervision results (Form 6.3.18) and issuing the RS Type Approval Certificate (CTO) for the product (Form 6.8.3).

16.2.2 Review of technical documentation shall be carried out to determine the product compliance with the applicable requirements of the RS rules, appropriate IMO resolutions, other ND to be specified in Type Approval Certificate (CTO).

The product shall be subjected to the full list of tests resulting from the requirements of the RS rules, IMO resolutions, other ND. Test types, test procedures and required results are given in the appropriate IEC and ISO standards. The results of previous tests may be taken into account. Test program specified in 16.2.1.2 determines the types and methods of tests to be carried out in the presence of the RS surveyor. Test program may include both bench tests and full scale or shipboard tests of the product.

Survey of the product shall be conducted for determining its compliance with the approved technical documentation, applicable RS rules, appropriate IMO resolutions, other ND to be specified in the RS Type Approval Certificate (CTO).

16.2.3 When required by the Register, the navigational equipment pilot specimens may be subjected to operational tests on board a ship, if they are of radically new design and were not previously used on board a ship, or cannot be adequately checked on the test bed.

16.3 SCOPE OF SURVEYS OF SERIAL PRODUCTS AT ESTABLISHED PRODUCTION

16.3.1 Technical supervision for manufacture of navigational equipment items at a manufacturer's during stable production shall be carried out by surveying each finished product providing for:

.1 checking the product compliance with the data specified in the RS Type Approval Certificate (CTO), checking the documents of the competent bodies confirming the product conformity with the special requirements (intrinsic safety, etc.);

.2 checking the completeness of the product and technical documentation;

.3 external inspection;

.4 checking product functioning;

.5 checking and testing the product to determine its performance and parameters, when the survey of equipment is carried out at production site;

.6 testing in the scope specified in effective documents on the product;

.7 checking spare parts (where applicable);

.8 issuing for products the Register documents prescribed by the technical supervision type established**.**

16.3.2 To surveying, shall be submitted the final products that have passed all the checks and tests conducted by the technical control body of the firm (manufacturer).

16.4 GENERAL INSTRUCTIONS ON SURVEYING OF SERIAL PRODUCTS AT ESTABLISHED PRODUCTION

16.4.1 Depending on the production process used at the firm (manufacturer), to be submitted for surveying are individual specimens of fully completed products or of their batch.

16.4.2 The presence of metrological documents for devices, apparatus, testing equipment, and the like intended for checking and testing products during the survey shall be ascertained.

16.4.3 The completeness shall be checked for compliance with data specified in the RS Type Approval Certificate (CTO).

In visual examination, the product conformity with the requirements of the Rules for the Equipment of Sea-Going Ships shall be verified. Presence of marking that indicates the manufacturer, type, serial number, safe distance of magnetic compass installation (where applicable) and other data pertinent for the particular kind of equipment.

16.5 SURVEYING SINGLE KINDS OF SERIAL PRODUCTS OF NAVIGATIONAL EQUIPMENT AT ESTABLISHED PRODUCTION

16.5.1 In addition to general inspections, checks, tests and measurements of navigational equipment, the following checks of single kinds of navigational equipment devices and systems given below can be carried out.

16.5.2 Radars and radar plotting aids (EPA, ATA or ARPA).

During survey of the radars and automatic radar plotting aids (ARPA) on the firm's (manufacturer's) bench, the following can be checked:

.1 starting period from the time the power is turned on;

.2 operation of the control and checking devices;

.3 the transmitter peak power for different range scales;

.4 the receiver sensitivity;

.5 the characteristics:

temporary gain control;

duration of the transmitted pulses on different range scales;

transmitted pulse recurrence rate;

.6 compliance of the range scales with the requirements of the documents;

.7 agreement between the zero reading of the digital range counter and the zero radius of the range ring;

.8 time required to read out the bearing and range with the use of the electronic bearing line and variable range marker;

.9 clear display of the course mark, range rings and possibility of varying the brilliance;

.10 readout of the radar information to other navigational aids and systems;

.11 maximum and minimum target detection range;

.12 range and bearing resolution of the radar;

.13 operation of the facilities for target acquisition and cancellation (EPA, ATA or ARPA);

.14 operation of the visual and audible signaling (EPA, ATA or ARPA);

.15 period of time during which full plotting information is displayed after changing range scales on which the EPA, ATA or ARPA facilities are available or resetting the display;

.16 test checking of the performance of the EPA, ATA or ARPA facilities with the use of the radar signal simulators and all necessary sensors including evaluation of the accuracy characteristics of the target's motion parameters according to test scenarios.

Check specified in 16.5.2.11 — 16.5.2.13 can be carried out in the process of operational tests on a special site or on board ship.

16.5.3 Radionavigation system receivers.

.1 during the survey of the receivers of the land-based radionavigation systems operating on the principle of measuring the time and phase difference, the following can be checked and tested:

.1.1 facility sensitivity;

.1.2 operation of the facility on the stipulated spacing frequencies;

.1.3 general gain control;

.1.4 determination of the root-mean-square error in measurement of the time interval on the signals of the system;

.1.5 limiting sensitivity in different modes;

.1.6 instrumental accuracy in the phase difference measurement;

.1.7 allowable lag error of the readout devices;

.1.8 root-mean-square error in correlation of the coarse display scale rotation;

.1.9 sufficiency of the indicator scale illumination.

.2 When surveying the receivers of the Global Navigational Satellite System (GNSS) the following checks and tests can be carried out:

.2.1 built-in performance test system;
.2.2 sensitivity of the radio receiving device;
.2.3 frequency selectivity characteristics of the radio receiving device;
.2.4 dynamic range;
.2.5 systems of co-ordinates used and means provided to transform the computed position base upon WGS-84 into another reference system of co-ordinates;
.2.6 output for transmitting data to other radio and navigational facilities;
.2.7 susceptibility level of the radio receiving device on the side receiving channels;
.2.8 interference immunity of the radio receiving device to the effects of interferences in the passband;
.2.9 interference immunity of the radio receiving device to the pulse interference;
.2.10 software and information support;
.2.11 time of receiving the navigational parameters;
.2.12 accuracy in determination of the navigational parameters.
16.5.4 Standard and spare magnetic compasses, transmitting heading device.
The following can be checked:
.1 accuracy in indicating course on a stationary base and under motions in all directions;
.2 steps in the card dial graduation and marking;
.3 total error in positioning of the card in any direction (heading) due to inaccuracy in the dial graduation, eccentricity of the card on the pin and inaccuracy in orientation in relation to the magnetic system;
.4 distance at which the card readings may be readily taken with the naked eye;
.5 the extent of the card observation sector transmitted to the conning station from the position where the standard compass is installed with the use of geometric or light-fibre optics;
.6 card stagnation (friction error);
.7 deflection of the card from the magnetic meridian when the compass rotates in the horizontal plane;
.8 semi-period of oscillation and time during which the card is brought in alignment with the magnetic meridian in case of forced deflection;
.9 compass bowl inclination angle at which the card retains horizontal position;
.10 free inclination angle of the bowl in gimbal suspension;
.11 limiting values and accuracy in compensation of semicircular, intercardinal, inclination and latitude deviation;
.12 transparency of liquid and absence of air in the bowl;
.13 reading accuracy of bearing finder;
.14 agreement in readings of the repeaters and main sensitive element in case of electric remote transmission of dial readings;
.15 error of the device for remote transmission of course when magnetic course is converted in the true course and the latter is transmitted to other navigational equipment (if any);
.16 operability of the signaling system to indicate error in the electric system for remote transmission of course (if any);
.17 hardware and software support to the protection of the device for the compensation of deviation due to unauthorized access;
.18 main, emergency (supplied from accumulator battery) and independent lighting of the card, sufficient to make the dial divisions of the compass card distinctly visible;
.19 provision of an alarm to indicate a failure of the power supply to the compass system and the device for remote transmission of course.
16.5.5 Gyrocompasses.

The following special checks and tests can be carried out:

.1 time period during which the gyrocompass is brought into alignment with meridian in latitudes up to 60°;

.2 steady state error at any course;

.3 permissible error from one run-up to another;

.4 errors in readings due to rolling up to 20° with a period of 10 s, pitching up to 10° with a period of 6 s and yawing up to 5° with a period of 15 s and the maximum horizontal accelerations not more than 1 m/s^2.

.5 follow-up system performance speed;

.6 divergence in readings between the master compass and repeaters;

.7 possibility of correcting the compass readings in respect to ship speed and latitude;

.8 operability of an alarm to indicate the main faults of the gyrocompass;

.9 possibility of transmitting the information on course to other navigational equipment.

16.5.6 Logs for measuring speed made good through the water and over the ground.

The following can be checked:

.1 unambiguity of displaying the operation mode and measured parameters by the indicators of the log units when several primary transducers are installed on board ship;

.2 minimum depth of functioning;

.3 range of the speeds to be measured;

.4 initial sensitivity;

.5 error in measuring the ship speed;

.6 error in measuring the distance run through the water;

.7 steps of the readings of the digital displays and electromagnetic distance displays, scale graduation of the analogue speed displays (if any);

.8 the effect of tolling and pitching on the accuracy characteristics of the log;

.9 functioning in the automatic and forced modes of measuring speed through the water and over the ground (if provided);

.10 maximum operating depth;

.11 structural measures to ensure tightness of the equipment penetrating the hull and signalling system to indicate position of the primary log transducer protruding from the hull;

.11 functioning of an alarm and indication to notify of the faults and operating status of the log;

.12 availability and operability of the arrangements for connecting with other ship equipment;

.13 functioning of an alarm and indication to notify of the faults and operating status of the log (fidelity of readings);

.14 possibility and ease of the log calibrating and making corrections.

16.5.7 Echo sounders.

The following can be checked:

.1 the minimum depth to be measured by echo sounder (in acoustic basin);

.2 compliance of the main performance of the echo sounder with the requirement for measuring the maximum depth (a quantitative integral evaluation of the system indicator of the equipment purpose meeting the requirement for measuring the maximum depth at maximum ship speed and in rolling and pitching can be made in laboratory conditions);

.3 availability of graphical and digital indication of the depth;

.4 scale ranges;

.5 scale of displaying depths in graphical form (resolution of the graphic display);

.6 intervals between the digital depth indicator readings and agreement thereof with the graphic display;

.7 presentation of servicing information (time marks and their intervals, depth scale graduation marks and their intervals, warning of the termination of the paper tape, if used);

.8 immediate and long-term data record;

.9 instrumental tolerance of the indicated depths on the shallow and deep range scales in digital and graphical indication;

.10 accuracy of operation of the dangerous/preset depth alarm, limits and discreteness of its setting;

.11 recurrence frequency of the transmissions;

.12 availability and operability of arrangements for connecting with other ship equipment;

.13 design of the echo sounder transducers with respect to protections (IP);

.14 starting period.

16.5.8 Heading control systems/Ship's track control systems.

.1 The following can be checked:

.1.1 stability of keeping the ship on a preset heading and/or on a preset course line (on special bench with simulators);

.1.2 adjustment of the sensitivity of the system performance in actuation of the rudder;

.1.3 limits of the rudder shifting and availability of the rudder stops;

.1.4 time of changing-over from "automatic" and/or "track" mode and back;

.1.5 indication of the system operation mode used;

.1.6 an alarm both audible with mute function and visual to indicate when the actual heading and/or track line deviates from the preset heading and/or track beyond a permissible limit as well as to warn about a failure of any information sensor, reduction in the ship speed below the limit necessary for steering the ship;

.1.7 manual adjustment of the system in case of absence or failure of the automatic adaptation to the sailing conditions;

.1.8 functioning of the remote steering stations (where provided);

.1.9 output of the data on the operation mode and performance of the system for automatic recording;

.2 moreover, the following can be checked during the tests of the ship's track control system:

.2.1 information displayed in the analogue and digital form on the system control panel;

.2.2 monitoring the ship position by another independent positioning system;

.2.3 actuation of an alarm when approaching the wheel-over and at the moment of manoeuvre starting;

.2.4 possibility of modifying a waypoint when the track was changed or a new track was plotted;

.2.5 possibility of sailing from one point to another at the preset turn radius and at the design radius basing on a preset ship turning motion pattern (if any).

16.5.9 Bridge navigational watch alarm system (BNWAS).

The following can be checked:

.1 operability of the system in all designated functioning modes;

.2 sequence of visual and audible alarms;

.3 the reset of the BNWAS to the initial state;

.4 operation of the device for alarm (visual and audible) acknowledgement;

.5 the indication of the operational mode of the BNWAS.

16.5.10 Long-range identification and tracking (LRIT) system equipment.

The following can be checked:

.1 automatic transmitting the ship's LRIT information to a LRIT Data Centre;

.2 format and completeness of the transmitting information;

.3 transmitting information on the LRIT Data Centre demand;

.4 changing intervals of the transmitting information based on the remote control commands from the LRIT Data Centre;

.5 operation of the system in the check mode without transmitting information to the LRIT Data Centre.

16.5.11 Electronic chart display and information system (ECDIS).

The following can be checked during the bench tests:

.1 recording of the route data and impossibility of changing them;

.2 connection with the receiver of the Global Navigational Satellite System, gyrocompass, log, radar, etc.;

.3 capability of displaying information contained in the electronic navigational chart and all updates without any quantitative or qualitative degradation of their information content;

.4 agreement between the accuracy of measurements and accuracy of computations in performing the following tasks:

establishment of the position by bearing and of the distance from the known position;

conversion of the co-ordinates from local system into WGS-84 and back;

.5 capability of scaling up and down the chart displaying. Whilst so doing, the size of symbols, letters and figures shall remain unchanged;

.6 capability of displaying the ship position either in true scale or as a symbol;

.7 display of:

co-ordinates in degrees, minutes and parts thereof; depths in meters and decimeters; heights in meters;

distances in miles and decimal parts thereof or meters;

speed in knots and parts thereof; time in hours, minutes and seconds; direction in degrees and parts thereof;

.8 amount of information on the chart objects including: units of depth; units of height; scale of displaying; zero reading of heights and depths; name of the geographic co-ordinate system; dangerous depth value; dangerous isobath value; edition number and edition date of the electronic navigational chart; date and number of the last updates made;

.9 colour of the chart display;

.10 resolution and size of the display;

.11 capability of displaying notes of the navigator in text and graphic form;

.12 capability of changing orientation of the chart display and the true or relative motion modes (chart display is stationary, ship mark moves and vice versa);

.13 actuation of an alarm in case of:

availability of a chart at a larger scale than provided by the display;

limit for deviation from the planned route, set by the operator, is exceeded;

ship enters the areas for which special conditions exist;

input from the position fixing system is lost;

approach to planned point;

use of reference system of the chart other that used in position fixing system;

failure of ECDIS;

situation when the planned route crosses the selected safety contour

.14 capability of using at least one electronic sighting device and movable range marker;

.15 capability and correctness of deriving co-ordinates from the automatic positioning system;

.16 capability, if envisaged, of overlaying the electronic chart by radar image;

.17 acceptance of the updates from an information carrier. Confirmation of the fidelity of the updates and compilation of the update list. Capability of manual entering the updates;

.18 automatic testing the performance of the major functions;

.19 ability of reproducing the information sufficient to reconstruct the operator's actions and verify the official database within the previous 12 h. Impossibility of changing the recorded information;

.20 retention of the operability in case of interruption of power supply within 45 s.

16.5.12 Rate-of-turn indicators.

The following can be checked and tested during the survey of the rate-of-turn indicators:

.1 operation independently of gyrocompass and radar operation with indication of the direction and angular speed of the ship turn;

.2 accuracy of the rate-of-turn determination with due regard for the influence of the Earth's revolution at ship's speed up to 10 knots;

.3 time of readiness of the indicator for operation;

.4 capability of using the indicator both with the automatic and manual ship steering;

.5 capability of transmitting the information on the rate-of-turn to other navigational instruments and systems.

16.5.13 Shipborne automatic identification (information) system (AIS).

The following can be checked during the bench tests of AIS together with connected aids and systems or simulators thereof:

.1 functioning of the built-in integrity test equipment including automatic record of all periods when the AIS installation is non-functioning in a non-volatile memory;

.2 automatic switching-on of the AIS equipment when the power is turned on and readiness of the equipment for operation within 2 min of switching-on (this requirement does not apply to the time of putting the receiver of the global navigation satellite system on the operational mode);

.3 capability of operating in an "autonomous mode" and capability of being switched to other modes ("assigned mode" and "polling mode") and back to the "autonomous mode";

.4 content of the information transmitted by AIS:

.4.1 static:

IMO number assigned to the ship;

call sign and name;

length and beam;

type of ship;

location of position-fixing antenna on the ship (aft or bow and port or starboard of centerline);

.4.2 dynamic:

ship's position with accuracy indication and integrity status);

time in UTC; course over ground;

speed over ground; true course;

navigational status: underway, at anchor, etc. – manual input;

rate-of-turn (where the rate-of-turn indicator is available);

.4.3 voyage related: ship's draught;

hazardous cargo and its type (as required by competent authority);

destination and estimated time of arrival (at Master's discretion);

.4.4 safety related messages;

.5 capability of transmitting information with the prescribed time intervals:

static information – every 6 min and at request; dynamic information – depending on the navigational status of the ship, change in its speed and course; voyage-related information – every 6 min, when data have been amended and on request;

.6 ability to transmit at least 2,000 reports per minute;

.7 capability of operating in assigned mode;

.8 capability of operating in polling mode;

.9 responding to the calls on the same channel;

.10 automatic switching-on of the Global Navigational Satellite System receiver in the event of failure of the main source of ship's positional information as well as an appropriate built-in integrity test indication;

.11 possibility of receiving differential corrections;

.12 availability and proper operation of two high-speed in-put/output ports (for interfacing the graphic display systems and additional equipment);

.13 availability and proper operation of ports for interfacing the dynamic information sensors;

.14 availability and proper operation of a port for interfacing the long-range communication facilities;

.15 protection of the input and transmitted data against unauthorized alteration;

.16 actuation of an alarm and indication when the status of the dynamic information sensor is changed;

.17 ability of ensuring the required priority in selecting the source of ship's positional information and automatic switching to the source of higher priority within 30 s of switching-on;

.18 capability of displaying the following information using the minimum keyboard and display of the AIS:

bearing, range and ship's name; alarm information and indications as a result of built-in integrity test;

input of voyage-related information and safety-related messages;

received safety-related messages;

received requests from the long-range communication facilities.

16.5.14 Voyage Data Recorder (VDR).

The following can be checked during the bench tests with the interfaced instruments, systems or simulators thereof connected:

.1 automatic switching-on of the recorder when the power from ship's sources is applied thereto as well as transfer to power supply from an emergency ship's source in the event of failure of the main source;

.2 operation of the recorder supplied from its own reserve power source within 2 h with automatic switching-off;

.3 manual switching-off of the recorder on prolonged stay of the ship in port and under repair;

.4 capability of recording, on the end information carrier, the initial ratings and list of the sensors in use with indication of their type for permanent storage;

.5 protection of the capsule with the end information carrier against unauthorized access and capability of extracting the recorded information without opening of the protective capsule;

.6 availability of documents confirming special tests of the protective capsule for deep-water immersion, high temperature and impact;

.7 design of the end information carrier with protective capsule which makes it possible to record data during accident; availability of devices to aid search and location of the capsule as well as a mechanism to release the capsule during immersion of the ship (emerging version);

.8 check of capability of continuous recording and storing of the data in the fixed and float-free recording media for at least 48 h;

.9 the relation between different events in time and capability of determining the date and time from the records;

.10 the volume of the compulsory information to be recorded and stored;

.11 capability of interpreting and documenting the information recorded on the end carrier with the use of special land-based facilities;

.12 capability of recording attempts of an authorized intervention in the recorder operation;

.13 integrity of the recorded data and actuation of an alarm when a non-correctable error is detected during recording;

.14 recording the bridge audio if the ship's source of electric power supply fails for a period of 2 h with subsequent automatic switching-off of the recorder;

.15 absence of the recorder's impact on the operation of the information sensors in the event of failure of the recorder or individual communication channels.

16.5.15 Sound reception system.

The following can be checked:

.1 range and direction of receiving outside sound signals (by comparison with the operator's perception);

.2 the audio band for reception of the sound signals;

.3 provision and possibility of adjusting the volume of outside sound signals reproduced in the wheelhouse;

.4 time of determination of the direction of the received sound signal.

16.6 RS DOCUMENTATION

16.6.1 With the satisfactory results of surveying prototype specimen of navigational equipment products specified in 16.2 and shipboard tests (where assigned), the RS Type Approval Certificate (CTO) shall be issued in accordance with Section 6, Part I "General Regulations for Technical Supervision".

16.6.2 With the positive results of surveying serial specimens of navigational equipment products at stable production as specified in 16.3 — 16.5, for each product (or batch) the documents shall be issued in accordance with Section 7, Part I "General Regulations for Technical Supervision".

17 EQUIPMENT FOR THE PREVENTION OF POLLUTION FROM SHIPS

17.1 GENERAL

17.1.1 The provisions of this Section apply in technical supervision of the equipment for the prevention of pollution from ships, subject to technical supervision of the Register in accordance with the RS Nomenclature.

17.1.2 The Section establishes the procedure for performing the technical supervision of the Register during manufacture the equipment for the prevention of pollution from ships (PPS equipment).

17.1.3 General provisions for the organisation of the technical supervision are set out in Part I "General Regulations for Technical Supervision", the requirements for the technical documentation are set out in Part II "Technical Documentation".

17.1.4 This Section provides the following definition of the external examination of the equipment.

External examination is examination of a component, material, related parts, verification of the accompanying documents issued in accordance with the technical supervision form during the manufacture and other documentation defining the compliance of the supervised items with the approved technical documentation, for example, measurement results, availability of brands (if provided), results of flaw detection (if provided).

Based on the results of the external examination, the possibility of continuing the manufacturing process (treatment), installation, hydraulic test, etc. shall be explored.

17.1.5 All the materials and related parts intended for the PPS equipment shall have documents confirming the compliance of the material and manufacture method with those specified in the approved technical documentation. These documents shall be drawn up in conformity with the technical supervision form, specified by the RS Nomenclature.

17.1.6 The necessary tests and scope thereof, procedure for the survey of the PPS equipment and related parts shall be specified in accordance with the Nomenclature of Items of the Register Technical Supervision and the normative documents in force agreed with the Register.

17.1.7 The tolerance rates and installation not accounted for in the approved documentation on the manufacture shall be indicated in the documentation on the production process approved by the Register.

17.1.8 When conducting the hydraulic tests, it is necessary to be guided by the requirements of 1.3, Part IX "Machinery" of the Rules for the Classification and Construction of Sea-Going Ships.

The conditions for conducting the hydraulic tests shall meet the standards in force and the following requirements:

.1 ambient air temperature shall be not less than 5 °C;

.2 difference in the temperature between the ambient air and medium used for the hydraulic tests shall not exceed 10 °C, to exclude sweating, use shall be made of a medium with a temperature exceeding the ambient air temperature;

.3 any work on the components subjected to the hydraulic test shall be prohibited.

17.1.9 Electrical equipment, automatic or remote control and measurement systems as well as the alarm, protection, indication devices of PPS equipment shall be tested as directly intended.

Prior to and after the tests, it is necessary to measure the insulation resistance of the electrical equipment and automation facilities.

17.1.10 Technical supervision during the manufacture of the PPS equipment under established production conditions shall be performed in accordance with 1.7 and 17.3.

17.1.11 Technical supervision during the manufacture of the pilot and prototype samples of the PPS equipment shall be performed in accordance with 1.5, 1.6 and 17.3.

17.2 TECHNICAL DOCUMENTATION

17.2.1 The manufacture of equipment, components and assemblies shall be performed under the technical supervision of the Register in accordance with the approved technical documentation and Chapter 1.4.

17.3 TECHNICAL SUPERVISION DURING MANUFACTURE OF POLLUTION PREVENTION EQUIPMENT UNDER ESTABLISHED PRODUCTION CONDITIONS

17.3.1 General.

17.3.1.1 Technical supervision during manufacture of the PPS equipment shall be performed in conformity with the requirements of this Chapter within the scope specified in Table 17.3.1.1.

Table 17.3.1.1

Nos.	Items of technical supervision	Examination of material, blanks of assemb- blies and components	Verification of accom- panying documents	External and inter nal examination	Check of welding operations	Check of component and assembly manufacture	Hydraulic tests	Check in operation
1	Equipment for the prevention of pollution by oil:							
	.1 15 ppm bilge separators	+	+	+	+	+	+	+
	.2 ballast and washing water discharge oil content meters	+	+	+	+	+	+	+
	.3 15 ppm bilge alarms	+	+	+	+	+	+	+
	.4 oil/water interface detectors in slop tanks	+	+	+	+	+	+	+
	.5 tank washing machines	+	+	+	+	+	+	+
	.6 oily water fine cleaning systems as a part of 5 ppm separators and 5 ppm bilge alarm and automated overboard discharge stopping devices	+	+	+	+	+	+	+
2	Equipment for the prevention of pollution by sewage:							
	.1 sewage treatment plants	+	+	+	+	+	+	+
	.2 sewage comminution and disinfection systems	+	+	+	+	+	+	+
	.3 sewage pumps	+	+	+	+	+	+	+
3	Equipment for the prevention of pollution by garbage:							
	.1 incinerators	+	+	+	+	+	+	+
	.2 garbage treatment plants	+	+	+	+	+	+	+
4	Equipment for the prevention of pollution by noxious liquid substances carried in bulk:							
	.1 ventilation equipment	+	+	+	+	+	+	+
	.2 tank washing machines	+	+	+	+	+	+	+
	.3 pumps for collection of noxious substances	+	+	+	+	+	+	+
5	Equipment for the prevention of air pollution:							
	.1 diesel engines complying with Regulation 13, Annex VI of MARPOL 73/78 and the requirements of the Technical Code on Control of Emission of Nitrogen Oxides from Marine Diesel Engines	+	+	+	+	+	+	+
	.2 NOx reducing devices as a component of marine diesel engine	+	+	+	+	+	+	+
	.3 NOx exhaust gas monitoring system (NOx Technical Code)	+	+	+		+		+
	.4 continuous SOx emission monitoring system (IMO resolution MEPC.259(68))	+	+	+		+		+
	.5 equipment for fuel oil sampling	+	+	+	+	+	+	+
	.6 exhaust gas cleaning units to reduce SOx emissions (IMO resolution MEPC.259(68), survey according to Scheme "A")	+	+	+	+	+	+	+

Nos.	Items of technical supervision	Examination of material, blanks of assemb- blies and components	Verification of accom- panying documents	External and inter nal examination	Check of welding operations	Check of component and assembly manufacture	Hydraulic tests	Check in operation
	.7 exhaust gas cleaning units to reduce SOx emissions (IMO resolution MEPC.259(68), survey according to Scheme "B")	+	+	+	+	+	+	+
6	Ballast Water Management Systems in compliance with the requirements of the Guidelines on Application of the Requirements of International Convention for the Control and Managements of Ships Ballast Water and Sediments	+	+	+	+	+	+	+

[1] When needed.

N o t e . The PPS equipment shall be subjected to special and bench tests in accordance with 1.7.3 and also at the request of the RS Branch Office which performs supervision during the manufacture.

17.3.1.2 Components of the products, prior to assembling, shall be checked at random for the compliance with the drawing dimensions and the material used. The accompanying documents shall be verified as well.

17.3.1.3 The welds of the PPS equipment casings shall be double-sided or single-sided whith complete-penetration welds.

17.3.1.4 To obtain the required conjugation, the components to be joined shall not be adjusted through excessive tightening by bolts, clamps and fitted in cold condition by blows.

17.3.1.5 The components of the systems being part of the PPS equipment shall be subjected to hydraulic tests in accordance with the requirements 21.1 and 21.2, Part VIII "Systems and Piping" of the Rules for the Classification and Construction of Sea-Going Ships.

17.3.1.6 The PPS equipment shall have a data plate showing the purpose of the equipment, name of the firm (manufacturer), type and model, serial number and year of manufacture. The plate shall be securely fastened to the equipment.

17.3.1.7 When incorporating structural modifications in the PPS equipment approved by the Register, tests according to 1.7.6 and 1.7.7 shall be carried out.

17.3.1.8 The PPS equipment shall be tested on the bench of the firm (manufacturer)in accordance with the program worked out in compliance with the test procedure (refer to Appendix 1) and approved by the Register.

Based on the satisfactory results of the type tests, Type Approval Certificates (Form 6.8.3) and Certificates of Type/Test Approval (СОТО/СОТИ) shall be drawn up for the products specified in 1.1 – 1.4, 2.1, 3.1, and 6 of Table 17.3.1.1 in accordance with Appendix 2:

.1 15 ppm bilge separators (Form 2.4.17.1[2]/2.4.17.2[2]);
.2 15 ppm bilge alarms (Form 2.4.11.1[2]);
.3 for ballast and washing water discharge oil content meters (Form 2.4.16.1[2]);
.4 for oil/water interface detectors in slop tanks (Form 2.4.19[1]);
.5 for sewage treatment plants (Forms 2.4.13.1[2] – 2.4.13.4[2]);
.6 for incinerators (Form 2.4.12.1[2]);
.7 for Water Ballast Management System (Forms 2.5.5/2.5.5.1).

1 Type Test Certificate.
2 Type Approval Certificate.

An instruction on drawing up and issuing Type Approval (Test) Certificates is given in Appendix 3.

For diesel engines specified in 5.1 of Table 17.3.1.1, the Engine Air Pollution Prevention Certificates (Form 2.4.40) with Supplements (Form 2.4.41) are issued.

For exhaust gas cleaning units to reduce SO_x emissions, approved in accordance with IMO resolution MEPC.259(68), Scheme "A" indicated in 5.6 of Table 17.3.1.1 the SO_x Emission Compliance Certificate (SECC) (Form 2.4.42) shall be issued, also the Certificate of Type Approval (Form 6.8.3) shall be issued, hereto. For exhaust gas cleaning units to reduce SOx emissions, approved in accordance with IMO resolution MEPC.259(68), Scheme "B" indicated in 5.7 of Table 17.3.1.1, the documents according to the Nomenclature shall be issued.

17.3.1.9 For the articles and PPS equipment referred to in 1.5, 1.6, 2.2, 2.3, 3.2, 4.1 – 4.3, 5.3 – 5.5 and 5.7 of Table 17.3.1.1, subject to fulfilment of the requirements of 17.3.1.8, the documents shall be drawn up in compliance with the Nomenclature.

17.3.1.10 For the stock-produced articles of the PPS equipment when issuing C and C/3 certificates for the products an entry shall be made on availability of Type Approval (Test) Certificate with its number and date of issue.

17.3.1.11 The scope of the acceptance tests of the stock-produced articles shall be defined when approving the program based on the test results of the first stock-produced article.

17.3.2 15 ppm bilge separators.

17.3.2.1 The equipment and devices shall be checked for the ease of access to assemblies and components being subject to periodical inspection, maintenance and repair, as well as to functional tests on bench in accordance with a program worked out by the manufacturer and approved by the Register with due account of the features and functions of the 15 ppm bilge separator of specific design. Each equipment shall be delivered with filled in firm's (manufacturer's) certificate including the acceptance test report.

17.3.2.2 The installation quality of the pipelines and fittings as well as the cabling shall be surveyed by external examination. The tightness of the piping and fitting joints shall be checked during the hydraulic tests of the articles.

17.3.2.3 If the equipment incorporates a separator of centrifugal type it shall meet the requirements of Section 5.

17.3.2.4 5 ppm bilge separators shall be checked in accordance with 17.3.2.1 to 17.3.2.3.

17.3.3 15 ppm bilge alarms.

17.3.3.1 15 ppm bilge alarms shall be checked for the ease of access to assemblies and components being subject to periodical inspection and maintenance, as well as to functional tests on bench in accordance with a program worked out by the firm (manufacturer) and approved by the Register with due account of the features and functions of the meter of specific design. Each meter shall be delivered with filled-in firm's (manufacturer's) certificate including the acceptance test report.

17.3.3.2 5 ppm bilge alarms shall be checked in accordance with 17.3.3.1.

17.3.4 Meters for automatic measurement of oil content in ballast and washing water discharge.

17.3.4.1 Each meter for automatic measurement of oil content in ballast and washing water discharge and each control section of the oil discharge monitoring and control system shall be subjected to functional tests on bench in accordance with a program worked out by the firm (manufacturer) and approved by the Register with due account of the features and functions of the meter of specific design. Each meter shall be delivered with filled in firm's (manufacturer's) certificate including the acceptance test report.

17.3.4.2 The program of functional tests shall include:

.1 check of flow rate, pressure drop or other equal parameter whichever is applied;

.2 check of all external connections;

.3 check of all alarm devices built in the meter;

.4 check of correction of the readings for several concentrations when running on oil for which the meter is designated (check method may by any approved by the Register).

17.3.4.3 The program of functional tests of the oil discharge control section shall include:

.1 check of all signals;

.2 check of the functioning of the signal processing device and recording equipment when the simulated input signals on oil content, flow rate and speed are changed;

.3 check in case of change in the input signals when:

instantaneous rate of discharge of oil exceeds 30 l per nautical mile;

total quantity of oil discharged exceeds 1/30000 of the total quantity of cargo of the type concerned;

.4 check of actuation of an alarm when the overboard discharge is stopped and in alarm conditions;

.5 check of reception of signals when each input signal exceeds the effective capacity of the system.

17.3.5 Oil/water interface detectors in slop tanks.

17.3.5.1 Detectors are subject to functional tests similar to those specified in 17.3.4.1.

17.3.6 Tank washing machines for crude oil washing.

17.3.6.1 The machines shall be checked for the ease of access to the assemblies and components to be subjected to periodical inspection, maintenance and repair.

17.3.6.2 The quality of assembling shall be checked by external examination. The tightness of joints shall be checked during hydraulic tests of the articles.

17.3.6.3 The continuity of electric circuit of the hydraulic monitor from the nozzle to connecting flange shall be checked at the firm (manufacturer) using a tester or other method approved by the Register.

17.3.7 Ventilators for the disposal of noxious liquid residues using ventilation procedures shall be surveyed in compliance with the requirements of Sections 5 and 10.

17.3.8 Washing machines for tanks carrying noxious substances in bulk shall be surveyed in compliance with the requirements of 17.3.6.

17.3.9 Pumps for noxious substances in bulk shall be surveyed in compliance with the requirements of Sections 5 and 10.

17.3.10 Sewage treatment, comminution and disinfection plants.

17.3.10.1 The plants shall be checked for the ease of access to the assemblies and components to be subjected to periodical inspection, maintenance and repair and shall be also subjected to functional tests similar to those stipulated in 17.3.2.1.

17.3.10.2 The quality of installation of the piping and fittings as well as installation of cabling shall be checked by external examination. The joint tightness of the piping and fittings shall be checked during the hydraulic tests of the items.

17.3.10.3 The safety devices shall be set to a pressure not exceeding 1,1 the working pressure.

17.3.11 Sewage pumps.

17.3.11.1 Sewage pumps shall meet the requirements of Sections 5 and 8.

17.3.12 Incinerators.

17.3.12.1 Incinerators shall be checked for the ease of access to the assemblies and components to be subjected to periodical examination and maintenance.

17.3.12.2 The quality of installation of the piping and fittings as well as installation of cabling shall be checked by external examination. The joint tightness of the piping and fittings shall be checked during the hydraulic tests of the items.

17.3.12.3 Before mounting of the refractory lining, it is necessary to examine walls, which shall have no bulges, deflections and unevenesses in excess of 10 mm per 1 m.

17.3.12.4 After mounting it is necessary to check, by external examination, the quality of the refractory lining. The surface of the brickwork shall be smooth; as an exception, individual steps not exceeding 2 to 3 mm at joints and total uneveness of not more than 10 mm per 1m may be allowed. Mobility of the refractory lining or individual parts thereof shall not be allowed.

Deviation of the tuyere hole diameter from the prescribed value shall not exceed ±5 mm and the misalignment of the tuyere hole and burner shall not exceed 2 mm.

17.3.12.5 Upon finalization of the complete assembling, it is necessary to test the incinerator jacket for tightness by air (if stipulated by the technical documentation). The pressure and permissible leaks in this case shall not exceed those specified in the approved technical documentation.

17.3.12.6 Each incinerator is subject to functional tests similar to those specified in 17.3.2.1.

17.3.13 Garbage treatment plants.

17.3.13.1 Garbage treatment plants shall meet the requirements of 17.3.12.1, 17.3.12.2 and 17.3.12.6.

17.3.14 Diesel engines of power output 130 kW and over.

17.3.14.1 Diesel engines are tested on the firm's (manufacturer's) bench in accordance with the requirements of the Technical Code on Control of Emission of Nitrogen Oxides from Marine Diesel Engines. Following the installation onboard a ship, diesel engines are checked in compliance with onboard NO_x verification procedures specified in the approved engine's Technical File.

17.3.15 Exhaust gas cleaning systems and NOx-reducing devices.

17.3.15.1 The testing of the exhaust gas cleaning systems and NOX-reducing devices shall be carried out in compliance with the requirements of the Guidelines (refer to IMO resolutions MEPC.259(68), MEPC.291(71) and MEPC 307 (73), as applicable). The system operation onboard a ship is verified according to the requiremnts of the Operation Manual for such system.

17.3.16 NO_x exhaust gas monitoring system (NO_x Technical Code)

17.3.16.1 Prior to commencement of technical supervision, the following documentation shall be submitted for approval:

.1 installation, operation and maintenance manual which includes at least the following:

functional description specifying the technical parameters, used measuring instruments and sensors, operating conditions, recommendations for installation and connection to ship systems, failure mode description, calibration requirements, recommendations for maintenance, functional process diagram of sampling and measurement with indication of all instruments and control devices and units;

.2 test program.

17.3.16.2 During survey of the system, the provisions of NO_x Technical Code shall be followed, the test program shall include:

.1 test of enclosure protection according to 10.5.5;

.2 test of enclosure protection according to 10.5.5;

.3 test for deviation of power supply from rated values according to 3.3 of Appendix 1 to Section 12;

.4 measurement of insulation resistance of automation equipment being a part of a system according to 3.1 of Appendix 1 to Section 12;

.5 check of resistance to external electromagnetic interference within the scope given in 3.4.2 of Appendix 1 to Section 12.

17.3.17 Continuous SO_x emission monitoring system (IMO resolution MEPC.259(68)).

17.3.17.1 Prior to commencement of technical supervision of system, documentation specified in 17.3.16.1 shall be submitted for approval.

17.3.17.2 During the survey of the system, the applicable provisions of IMO resolution MEPC.259(68) shall be followed, the test program shall include checks listed in 17.3.16.2.

17.3.18 Equipment for fuel oil sampling.

17.3.1.18.1 Functional tests of samplers are carried out at the firm (manufacturer) prior to issuing Type Approval Certificate

17.3.19 Garbage containers.

17.3.19.1 All garbage containers shall have smooth inner surfaces and be so designed as to allow easy discharge and cleaning. The covers of waste intake holes shall ensure the tight closure of openings for garbage loading. The removable garbage containers shall be provided with appliances for reliable securing on board the ship. Garbage containers shall comply with the requirements of 2.1.1.11, Part VI "Fire Protection" of the Rules for the Classification and Construction of Sea-Going Ships.

17.3.20 Ballast Water Management Systems.

17.3.20.1 Ballast water management systems shall be tested in compliance with the requirements of the Guidelines on Application of the Requirements for International Convention for the Control and Managements o Ships Ballast Water and Sediments.

APPENDIX 1

TEST SPECIFICATIONS FOR EQUIPMENT FOR THE PREVENTION OF POLLUTION

1. TEST SPECIFICATIONS AND PERFORMANCE STANDARDS FOR TYPE APPROVAL OF 15 PPM BILGE SEPARATORS

The technical requirements for tests and performance standards for type approval of 15 ppm bilge separators are set forth in IMO resolution MEPC.107(49) as amended "Revised Guidelines and Specifications for Pollution Prevention Equipment for Machinery Space Bilges of Ships".

2. TEST SPECIFICATIONS AND PERFORMANCE STANDARDS FOR TYPE APPROVAL OF 15 PPM BILGE ALARMS

The technical requirements for tests and performance standards for type approval of 15 ppm bilge alarms are set forth in IMO resolution MEPC.107(49) "Revised Guidelines and Specifications for Pollution Prevention Equipment for Machinery Space Bilges of Ships".

3. SPECIFICATIONS FOR TYPE APPROVAL OF THE OIL CONTENT METER AND THE CONTROL SECTION OF AN OIL DISCHARGE MONITORING AND CONTROL SYSTEM

The technical requirements for type approval of the oil content meter and the control section of an oil discharge monitoring and control system are set forth in IMO resolution MEPC.108(49) as amended in IMO resolution MEPC.240(65).

The meters tested and submitted for type approval on or after 17 May 2013 shall have certificates of type approval (COTO) issued in compliance with the form in IMO resolution MEPC.240(65).

4. TEST SPECIFICATIONS FOR TYPE APPROVAL OF DETECTORS FOR DETERMINATION OF OIL/WATER INTERFACE IN SLOP TANKS

The technical requirements for tests for type approval of detectors for the determination of the oil/ water interface in slop tanks are set forth in IMO resolution MEPC.5(XIII) "Specifications for oil/water interface detectors".

5. TEST SPECIFICATIONS FOR DESIGN, OPERATION AND CONTROL OF CRUDE OIL TANK WASHING MACHINES

The technical requirements for control of the operation of crude oil tank washing machines are set forth in IMO resolution A.446(XI) "Revised Specifications for the Design, Operation and Control of Crude Oil Washing Systems" with amendments contained in IMO resolutions A.497(XII) and A.897(21).

6. TEST SPECIFICATIONS FOR TYPE APPROVAL OF SEWAGE TREATMENT PLANTS

The technical requirements for tests for type approval of sewage treatment plants are set forth in IMO resolution MEPC.227(64) "The 2012 Guidelines on Implementation of Effluent Standards and Performance Tests for Sewage Treatment Plants" as amended in resolution MEPC. 284(70).

Resolution MEPC. 284(70) as amended shall be applied to the sewage treatment plants tested and submitted for type approval on or after 28 October 2016.

7. TEST SPECIFICATIONS FOR TYPE APPROVAL OF INCINERATORS

Specifications for Type Approval Tests of incinerators are set forth in IMO resolution MEPC.244(66) "2014 Standard Specification for Shipboard Incinerators".

8. TEST SPECIFICATIONS FOR SHIPBOARD INTERNAL COMBUSTION ENGINES IN ACCORDANCE WITH THE NO_x TECHNICAL CODE

The technical requirements for tests of shipboard internal combustion engines being subject to Regulation 13, Annex VI to MARPOL 73/78 with the issuance of the relevant Certificates are set forth in the NO_x Technical Code including NOx reducing devices regarding IMO resolutions MEPC.291(71) and MEPC.307(73), as applicable.

9. TEST SPECIFICATIONS FOR EXHAUST GAS CLEANING UNIT TO REDUCE SO_x EMISSIONS

The technical requirements for type approval tests of exhaust gas cleaning unit to reduce SO_x emissions are specified in IMO resolution MEPC.259(68) "2015 Guidelines for Exhaust Gas Cleaning Systems".

10. TEST SPECIFICATIONS FOR BALLAST WATER MANAGEMENT SYSTEMS

The technical requirements for tests of ballast water management systems to comply with the requirements of International Convention for the Control and Managements of Ships Ballast Water and Sediments are specified in IMO resolution MEPC.300(72) "BWMS Code".

APPENDIX 2

TYPE APPROVAL (TEST) CERTIFICATE FOR EQUIPMENT FOR THE PREVENTION OF POLLUTION

1. Type Approval (Test) Certificate (СОТО/СОТИ) is a document of the Register, which certifies that the PPS equipment meets the requirements of the international documents specified in Appendix 1 of these Rules. Type Approval Certificate (Form 6.8.3) shall be issued for the specified documents in accordance with the Nomenclature (refer to Appendix 1, Part I "General Regulations for Technical Supervision" of the Rules for Technical Supervision during Construction of Ships and Manufacture of Materials and Products for Ships).

2. Type Approval (Test) Certificate does not supersede the Register Certificate to be issued for the finished product.

3. Type Approval (Test) Certificate is a compulsory document for the following items of supervision:

.1 Type Test Certificate:

for oil/water interface detectors in slop tanks (form 2.4.19);

for sewage treatment plants (form 2.4.13);

.2 Type Approval Certificate:

for 15 ppm bilge separators (Form 2.4.17.1);

for 15 ppm bilge alarms (Form 2.4.11.1);

for ballast and washing water discharge oil content meters (Form 2.4.16.1);

for incinerators (Forms 2.4.12/2.4.12.1);

for sewage treatment plants (Forms 2.4.13.1 – 2.4.13.4).

.3 Type Approval Certificate of ballast water management system: for ballast water management systems (Forms 2.5.5 and 2.5.5.1).

4. In order to obtain Type Approval (Test) Certificate, the item of supervision shall be surveyed and tested by the Surveyor to the Register.

5. The scope of tests of the supervised items in order to obtain Type Approval (Test) Certificate shall be specified on the basis of the requirements set out in the international documents specified in Appendix 1 of these Rules and additional requirements of this Section.

The tests shall be carried out in accordance with a program worked out by the disigner of the supervised item and approved by the Register.

6. Type Approval (Test) Certificate is issued if:

.1 full set of technical documentation for the manufacture of the PPS equipment approved by the Register is available;

.2 testing laboratories performing an analysis of the oily water samples meet the requirements of Appendices 1 to 3;

.3 results of the tests carried out in accordance with the approved program meet the requirement of the Register;

7. Type Approval (Test) Certificate (СОТО/СОТИ) shall be issued by the RHO or by the RS Branch Office which performs supervision during the manufacture of the PPS equipment.

8. Type Approval (Test) Certificate shall be issued to the supervised item without any limitation of its validity period. Type Approval Certificate of ballast water management system (Form 2.5.5.1) shall be issued for 5 years.

9. Type Approval (Test) Certificate becomes invalid in the following cases:

.1 when the conditions of issuing the Certificate have been infringed;

.2 when amendments concerning matters within the competence of the Register have been inserted into the approved technical documentation without agreement with the Register;

.3 when intolerable defects have been detected or when the extent and stability of the cleaning capability of the equipment have been disturbed.

10. The list of the supervised items which have obtained Type Approval (Test) Certificate shall be published by the Register.

APPENDIX 3

INSTRUCTION ON DRAWING UP AND ISSUE OF TYPE APPROVAL (TEST) CERTIFICATE FOR THE EQUIPMENT FOR THE PREVENTION OF POLLUTION

1. Type Approval (Test) Certificate (СОТО/СОТИ) shall be issued in accordance with 17.3.1.8 of this Section.

2. Type Approval (Test) Certificate shall be issued by the Register on the basis of the test results in accordance with the following procedure:

.1 RHO or the RS Branch Office which performs technical supervision during the manufacture of the stock-produced articles of the PPS equipment draws up and issues Type Approval (Test) Certificates (СОТО/СОТИ) for the supervised items listed in 1.1 – 1.4, 2.1, 3.1 and 6 of Table 17.3.1.1 of this Section;

.2 the drawn up Type Approval (Test) Certificates together with the Survey Report (form 6.3.18) on the basis of which they are drawn up shall be sent to the RHO for approval.

The following diagrams shall be attached to Type Approval (Test) Certificate for the 15 ppm bilge separator (Form 2.4.17.1):

diagram of test rig;

diagram of sampling arrangement;

.3 the Certificates are drawn up in Russian and English (Forms 2.4.11.1, 2.4.12, 2.4.12.1, 2.4.13.1 – 2.4.13.4, 2.4.16.1, 2.4.17.1, 2.4.19, 2.5.5 and 2.5.5.1). In so doing, the Surveyor witnessing the tests signs the additions to the Certificates and certifies them with his stamp;

.4 the Certificates shall be signed by the RS Office management and certified by a round stamp with an anchor picture;

.5 the record of all the Certificates issued by the Register shall be kept by the RHO Information Processing and Information Technology Implementation Department.

Russian Maritime Register of Shipping

Rules for Technical Supervision during Construction of Ships and Manufacture of Materials and Products for Ships
Part IV
Technical Supervision during Manufacture of Products

FAI "Russian Maritime Register of Shipping"
8, Dvortsovaya Naberezhnaya,
191186, St. Petersburg,
Russian Federation
www.rs-class.org/en/