RUSSIAN MARITIME REGISTER OF SHIPPING

Version: 01.07.2022

RULES

FOR THE CLASSIFICATION AND CONSTRUCTION OF SEA-GOING SHIPS

PART XIII

MATERIALS

ND No. 2-020101-152-E

St. Petersburg

2022

RULES FOR THE CLASSIFICATION AND CONSTRUCTION OF SEA-GOING SHIPS

Rules for the Classification and Construction of Sea-Going Ships of Russian Maritime Register of Shipping have been approved in accordance with the established approval procedure and come into force on 1 January 2022 (except for Part XX which came into force on 15 March 2022).

The present edition of the Rules is based on the 2021 edition taking into account the amendments and additions developed immediately before publication.

The procedural requirements, unified requirements, unified interpretations and recommendations of the International Association of Classification Societies (IACS) and the relevant resolutions of the International Maritime Organization (IMO) have been taken into consideration.

The Rules are published in the following parts:

Part I "Classification";

Part II "Hull";

Part III "Equipment, Arrangements and Outfit";

Part IV "Stability";

Part V "Subdivision";

Part VI "Fire Protection";

Part VII "Machinery Installations";

Part VIII "Systems and Piping";

Part IX "Machinery";

Part X "Boilers, Heat Exchangers and Pressure Vessels";

Part XI "Electrical Equipment";

Part XII "Refrigerating Plants";

Part XIII "Materials";

Part XIV "Welding";

Part XV "Automation";

Part XVI "Structure and Strength of Fiber-Reinforced Plastic Ships";

Part XVII "Distinguishing Marks and Descriptive Notations in the Class Notation Specifying Structural and Operational Particulars of Ships";

Part XVIII "Additional Requirements for Structures of Container Ships and Ships, Dedicated Primarily to Carry their Load in Containers". The text of the Part is identical to IACS UR S11A "Longitudinal Strength Standard for Container Ships" (June 2015) and S34 "Functional Requirements on Load Cases for Strength Assessment of Container Ships by Finite Element Analysis" (May 2015);

Part XIX "Additional Requirements for Cargo Ships of Less Than 500 Gross Tonnage";

Part XX "Additional Requirements for Yachts";

Supplement to Rules and Guidelines of Russian Maritime Register of Shipping "IACS Procedural Requirements, Unified Requirements, Unified Interpretations and Recommendations".

© Russian Maritime Register of Shipping, 2022

REVISION HISTORY

(purely editorial amendments are not included in the Revision History)

Amended paras/chapters/ sections	Information on amendments	Number and date of the Circular Letter	Entry-into-force date
Annotation	Annotation has been amended in connection with issuing new Part XX "Additional Requirements for Commercial Yachts"	—	15.03.2022
	Annotation has been specified due to renaming of Part XX	312-09-1747c of 14.04.2022	14.04.2022
Para 3.3.3	Requirements for the scope of testing of steel for boilers, heat exchangers and pressure vessels have been specified	314-04-1684c of 11.01.2022	01.03.2022
Paras 3.5.1.1 — 3.5.1.2	Requirements for forgings and castings with confirmed cold resistance properties have been specified	314-04-1778c of 27.05.2022	01.07.2022
Para 3.5.3.1.1	Requirements for delivery of steel with additional index "Arc" have been specified	314-04-1778c of 27.05.2022	01.07.2022
Para 3.7.1.2	Requirements for forgings with confirmed cold resistance properties have been specified	314-04-1778c of 27.05.2022	01.07.2022
Para 3.8.1.3	Requirements for castings with confirmed cold resistance properties have been specified	314-04-1778c of 27.05.2022	01.07.2022
Para 3.12.9.2	Requirements for repair of defects have been specified	314-04-1778c of 27.05.2022	01.07.2022
Para 3.15.2.1	Requirements for allowable manufacturing method of steel ropes have been specified	314-04-1684c of 11.01.2022	01.03.2022
Table 3.16.1.6	Designation of steel grade and mark has been specified	314-04-1778c of 27.05.2022	01.07.2022
Para 4.2.8.2	Requirements for repair of defects have been specified	314-04-1778c of 27.05.2022	01.07.2022
Table 5.1.3-2	Requirements for mechanical properties for alloy 1561 extruded products have been specified	314-04-1684c of 11.01.2022	01.03.2022
Para 6.5.3.1	Requirements for application of ice resistant coatings have	312-09-1708c of 25.02.2022	15.03.2022

Amended paras/chapters/ sections	Information on amendments	Number and date of the Circular Letter	Entry-into-force date
	been specified		
Para 6.5.3.2	New para containing requirements for application of ice resistant coatings has been introduced	312-09-1708c of 25.02.2022	15.03.2022
Para 6.10.1	Requirements for scope of application have been specified	314-04-1778c of 27.05.2022	01.07.2022
Para 9.4.2.1	Requirements for chemical composition of titanium alloy pipes have been specified	314-04-1778c of 27.05.2022	01.07.2022
Para 9.4.3.1	Requirements for mechanical properties of titanium alloy pipes have been specified	314-04-1778c of 27.05.2022	01.07.2022
Para 9.4.3.3	Requirements for titanium alloy grade ПТ-7М with ultrafine grained structure have been introduced	314-04-1778c of 27.05.2022	01.07.2022
Table 9.4.3.3-4	New Table has been introduced containing requirements for titanium alloy grade ПТ-7М with ultrafine grained structure	314-04-1778c of 27.05.2022	01.07.2022
Para 9.4.6	Requirements for titanium alloy grade ПТ-7М with ultrafine grained structure have been introduced	314-04-1778c of 27.05.2022	01.07.2022

1 GENERAL

1.1 APPLICATION

1.1.1 The requirements of this Part of the Rules apply to materials and products that are subject, in conformity with the other parts of the Rules, to the survey by the Register.

Requirements pertaining to the choice and application of materials and products shall be found in the relevant parts of the Rules.

Requirements to the scope of survey and testing at the initial survey of manufacture of materials and products, as well as at carrying out of the Register technical supervision in course of their manufacture are stipulated in Part III "Technical Supervision during Manufacture of Materials" of the Rules for Technical Supervision during Construction of Ships and Manufacture of Materials and Products for Ships.

1.1.2 Unless specified otherwise, materials and products shall meet the requirements of this Part of the Rules.

1.1.3 Materials, being part of a structure or product, on which the requirements not included in this Part are imposed, due to conditions of their operation, as well as materials not regulated by this Part, the chemical composition, mechanical and service properties of which were not considered by the Register for a particular application, shall be considered by the Register on the basis of the normative documentation, calculation and test results. These shall confirm the construction or product safety level to be not lower that it is required by the corresponding Sections of the Rules. Requirements for technical supervision of metallic materials are specified in 2.4.1.3 of Part III "Technical Supervision during Manufacture of Materials" of the Rules for Technical Supervision during Construction of Ships and Manufacture of Materials and Products for Ships.

Materials manufactured according to international and national standards or specifications, or other technical documentation may be permitted by the Register for a specific application, provided the requirements of the Rules are followed.

The Register may permit the delivery of materials and products only in accordance with to the normative technical documentation reviewed by the Register. Given the distinctions between the above documentation and the Rules, materials testings and their assessment shall be carried out taking into account the strictest requirements.

1.1.4 Type of technical supervision of materials and requirements for manufacturers in each case of application are determined in accordance with the Nomenclature of Items of the Register Technical Supervision (see Appendix 1, Part I "General Regulations for Technical Supervision" of the Rules for Technical Supervision during Construction of Ships and Manufacture of Materials and Products for Ships).

1.2 DEFINITIONS AND EXPLANATIONS

1.2.1 Definitions and explanations relating to the general terminology of the Rules are given in Part I "Classification".

For the purpose of this Part the following definitions have been adopted.

Z-steel is steel with guaranteed through-thickness properties, which is intended for welded structures and can withstand considerable stresses perpendicular to the plate surface.

Product, for the purpose of this Part, means semi-finished products, chain cables and accessories, and ropes as well.

Register stamp means a brand, stamp or punch of a certain type specified by the Register applied to finished products, or to products during their manufacture, to confirm the fact of survey by the Register and identify the products with the documents issued for them.

A specimen is a test piece of specified shape and size prepared from a sample and used for the determination of mechanical, technological and other properties of material by testing.

Approval of quality system means an action of the Register, certifying that the properly identified quality management system complies with the Register requirements.

A batch is the limited number of semi-finished products and products, to which the results of statutory tests are extended.

Initial tests mean a particular scope of control tests specified in a special program approved by the Register and performed during the works survey exercised by the Register prior to issue of the Recognition Certificate for Manufacturer to the works.

A semi-finished product is an ingot, slab, bloom, billet intended for further rerolling, technological treatment.

A semi-finished product is a casting, forging, plate or tube and etc. intended for machining and technological treatment to acquire the finished state.

Recognized laboratory means a laboratory (center) included into the List of laboratories (centers) having Recognition Certificates of Testing Laboratories.

A sample is a portion of a semi-finished product or product or a specially fabricated blank of which test specimens shall be machined.

Recognition Certificate for Manufacturer means a document confirming the compliance of the manufacturer's products and conditions of their manufacturer with the Register rules and warranting the introduction (entry) of the works into the List of recognized materials and manufacturers.

Register Certificate (Certificate) means a document certifying the compliance of a particular volume of the specific type of product with the requirements of the Register.

Acceptance (certification) tests mean a test extent established by the Register rules or documentation agreed upon by the Register for the products delivered under survey by the Register; the test results serve the basis for issue of the Register certificates.

Manufacturer's Certificate means a document of the works certifying the compliance of a particular volume of the specific type of product with the requirements of the order and confirming that the products are manufactured in compliance with production practice adopted at works. The Manufacturer's Certificate is issued by the manufacturer and shall be certified by signature of the person representing the Quality Control Department.

Lamellar tearing is breaking of welded structure components, made of rolled plates or pipes, due to considerable welding stresses and/or external loads applied in the direction perpendicular to the plate surface.

1.3 SURVEY

1.3.1 General.

1.3.1.1 General provisions, regulating the scope and the procedure of survey shall be found in the General Regulations for the Classification and Other Activity.

1.3.1.2 If the recognition of manufacturer is required by the chapters of this Part of the Rules, such recognition shall be performed prior to commencement of manufacture of products. For this purpose the Register carries out survey of the works, which comprises the following:

.1 review and recognition of technical documentation specifying the properties and conditions of production. Review of technical documentation on materials and products, as a rule, is carried out prior to the testing of materials;

.2 direct survey of production and the quality system of the firm, conducting of check testing. In course of taking the above actions, a compliance of the manufacture parameters and the products with the requirements of the documentation shall be confirmed (refer to 1.3.1.2.1) and the Rules of the Register, as well as the appropriate level of quality stability;

.3 issue of the survey results:

issue of the Recognition Certificate for Manufacturer or Type Approval Certificate (if the results are satisfactory);

preparation of the conclusion on impossibility of issue of the above-mentioned Register documents (if the results are unsatisfactory).

All the procedures necessary for obtaining the Recognition Certificate for Manufacturer and Type Approval Certificate and the documents, confirming the recognition of the firm and its products by the Register shall be executed in accordance with the requirements of Sections 2 and 3, Part III "Technical Supervision during Manufacture of Materials" of the Rules for Technical Supervision during Construction of Ships and Manufacture of Materials and Products for Ships based on the requests of firms.

1.3.1.3 During production the survey of materials and products in course of the technical supervision includes the following:

.1 tests and inspection;

.2 issue of the documents (refer to 1.4.3) on the basis of the results of tests and inspection.

1.3.2 Testing.

1.3.2.1 Check testing in course of the firm recognition is carried out according to the program approved by the Register. The program is prepared on the basis of appropriate requirements of this Part of the Rules, national or international standards and other technical documentation.

Testing under the Register technical supervision during manufacture of products shall be conducted in compliance with the requirements of this Part depending on the materials and products subjected to the tests and RS-agreed standards and specifications.

1.3.2.2 The site and time of the prescribed tests shall be specified by the manufacturer in advance. Sampling, test procedures, specimen cutout procedures shall be effected in compliance with the applicable requirements of the Rules (according to Section 2). Unless otherwise specified, the Register's representative shall brand the samples and specimens and the tests shall be carried out in his presence.

1.3.2.3 Where the test results are unsatisfactory, unless otherwise specified in the relevant chapters, retesting shall be conducted with the following conditions being observed.

1.3.2.3.1 Tensile test.

From the semi-finished product, which has failed the test, a double number of specimens may be machined from the locality nearest to the area, from which samples have been originally cut out.

In case the results of tests carried out on this double number of specimens are satisfactory, the semifinished product submitted to tests, as well as the relevant batch may be accepted.

If at least one specimen (from the additional set) yields unsatisfactory results, the semi-finished product submitted shall be rejected. However, the Register may accept the rest of the batch, provided the test results obtained on two other semi-finished products of the same batch prove satisfactory. If one of two semi-finished products selected additionally yields unsatisfactory results, the whole batch shall be rejected.

1.3.2.3.2 Impact test.

The cases of unsatisfactory test results include:

when the average value of three impact tests (*KV*) fails to meet the prescribed requirements,

or more than one result out of three is below the required average value,

or the result on any one of the specimens is more than by 30 % below the required average value.

In any one of the cases listed, re-testing may be carried out on additional number of specimens machined from the same semi-finished product at the locality nearest to the area of preceding cutting-out.

The submitted semi-finished product and the batch may be accepted if the new average value of test results (three initial tests plus three additional tests) exceeds the required average value and not more than two results out of six are below the required average value and not more than one specimen has yielded the result, which is below the required one by 30 %.

Where the results of re-testing of the semi-finished product representing a batch are unsatisfactory, this product shall be rejected, but the remaining semi-finished products of the batch may be accepted in case where the results of tests carried out on two additional semi-finished products of this batch are satisfactory. Where the test results of two additional semi-finished products are unsatisfactory, the batch shall be rejected. The mentioned additional semi-finished products shall be the thickest among the products available in the batch.

The test principle proposed here for *KV* may be applicable to U-notched specimen.

1.3.2.3.3 Where the test results are unsatisfactory due to local defects in the specimen material, faulty machining or faulty test equipment or in case of tensile test fracture occurs beyond the design length of the specimen, the test shall be repeated on the same number of specimens.

At the manufacturer's discretion, the semi-finished products from the batch rejected may be submitted to tests item-by-item and where the results are satisfactory, they may be accepted by the Register for supply.

At the manufacturer's discretion, the semi-finished products from the batch rejected may be re-tested after heat treatment, repeated heat treatment, or may be submitted as a category other than that initially declared. Where test results in case of such repeated submission are satisfactory for supply, the Register may accept the material.

Any material that yielded unsatisfactory results during subsequent machining or application shall be rejected irrespective of the availability of records of tests carried out previously or appropriate certificates.

1.3.2.4 If confusion of specimens or test results is detected or the test results do not make it possible to assess the material properties with the required degree of accuracy, the Register may require any tests to be repeated in the presence of its representative.

1.3.2.5 Material produced, the properties of which do not fully agree with the requirements of this Part, the deviations being not essential for the operation of the structure or product, may be used in accordance with the purpose only subject to review of the deviations by the Register and in case a relevant application from the manufacturer and agreement of the customer is available.

1.4 MARKING AND DOCUMENTATION

1.4.1 Identification.

During manufacture of materials and products at works, the system of monitoring shall be applied, which enable to check the products manufacture at any stage, beginning from the original ladle of metal. Documentation confirming the availability of such a system at the works shall be submitted to the Register.

1.4.2 Marking.

Prior to submission to the Register representative the materials shall be respectively marked. The marking of the materials, unless specified otherwise, (the peculiarities of marking shall be agreed in advance and shall reflect the particular products properties, for example, refer to 3.2.9), shall be carried out according to the standards taking the following requirements in consideration:

.1 in the case of semi-finished products delivered in single pieces each one of them shall be marked. For shipments in bundles two weather-resistant labels containing the marking shall be provided and firmly fastened to the opposite ends of the bundle.

When a great number of semi-finished products is delivered and these are of small size, the marking procedure and the content of the marking shall be agreed with the Register.

Semi-finished products to undergo further machining shall be stamped, as far as possible, in spots shall not be machined.

The stamp shall stand out clearly and be framed with a bright paint resistant to atmosphere;

.2 as a rule, the stamp shall include the following information:

grade or quality of material;

figures or other designation to indicate the origin of the semi-finished product (number of semifinished product, number of cast and the like);

manufacturer's name or trade mark;

stamp of the quality control service of the manufacturer's;

Register's brand (if required);

.3 if the semi-finished product does not withstand the tests required by the Rules or defects are revealed, which make its use in accordance with the purpose impossible, the Register brand and the material grade designation shall be removed or cancelled.

Additional requirements to marking are stated in 2.4.3, Part III "Technical supervision during Manufacture of Materials" of the Rules for Technical Supervision during Construction of Ships and Manufacture of Materials and Products for Ships.

1.4.3 Documentation.

Every batch of the metallic materials and products, or a separate semi-finished product and a separate item, if the delivery is performed in single pieces, which passed the tests, shall be accompanied by the Register certificate.

1.4.3.1 Manufacturer's Certificate.

The Register representative simultaneously with the submission of the final material or in advance shall be presented with the Manufacturer's Certificate for Material. The Certificate shall be attested by the works quality division, witnessed by the authorized person, and, as minimum, shall contain the following data:

name of the works and the order number;

project number, if known;

name, number, dimensions and mass of the semi-finished product with indication of the drawing number or sketch (if applicable);

mark (grade) of the material, type of alloy, number of ladle and chemical composition;

identification number;

type and mode of heat treatment (if necessary);

mechanical test results;

non-destructive testing results (satisfactory or unsatisfactory), if applied.

1.4.3.2 The Register Certificate, at least, shall contain the following data:
order number;
building project, if known;
name, number, dimensions and mass of the material;
mark (grade) of the material and condition of supply;
number of Manufacturer's Certificate;
number of batch or semi-finished product or identification number, which enables to identify the supplied material;
drawing number (if applicable).
The obligatory supplement to the Register certificate shall be the Manufacturer's Certificates attested by the authorized representative of the Manufacturer.

1.5 LABORATORIES ENGAGED IN TESTING

1.5.1 This Chapter applies to laboratories engaged in testing of materials subject to the survey by the Register.

1.5.2 Testing of materials provided under the technical supervision of the Register by the recognized metallurgy works (holding the Recognition Certificate of Manufacturer) may be conducted without obtaining a Recognition Certificate of Testing Laboratory by the said laboratories.

Laboratories of other firms or independent laboratories may determine chemical composition and conduct tests to determine mechanical and other properties of the items of supervision only after being recognized by the Register.

1.5.3 The above-mentioned provisions fully apply to the laboratories engaged in testing of items of the Register supervision by non-destructive methods.

1.5.4 Laboratories engaged in non-destructive testing of materials and products shall have a Recognition Certificate issued by the Register and/or any other appropriate document of the authorized national or international organization, which confirms the competence of the laboratory. In the Certificate or the document the scope and conditions of applying testing shall be defined. To be recognized for applying the ultrasonic testing, a request shall be forwarded to the Register supplemented by the following documents confirming that the laboratory is ready to carry out the non-destructive testing:

documents in confirmation of availability of qualified personnel together with the name of the body having carried out the certification of the personnel;

technical characteristics of relevant equipment and the scope of its application;

instructions for personnel.

Tests shall be made to confirm reliability of the test results and the possibility of their reproduction.

The test program shall be approved by the Register.

1.5.5 The results of material testing and investigations conducted are recorded in the prescribed way (entered in the test log, report, etc.). The test log (report, etc.) shall contain all the data necessary for the assessment of material quality and subsequent issue of certificate.

A report of testing of products shall include at least the following information: kind of product, material and major dimensions of product, testing method, testing frequency, type of unified reference block, size and position of defects, name of operator and date of testing.

2 PROCEDURES OF TESTING

2.1 GENERAL

2.1.1 The requirements of this Section cover the types and procedures of testing materials, which are subject to survey by the Register during their manufacture. The need to conduct the tests and evaluation criteria of test results are defined in the relevant sections of this Part or other parts of the Rules.

2.1.2 The Section gives general requirements for testing conditions, types and dimensions of test specimens, and their preparation.

Alternative testing procedures and types of test specimens may be adopted, subject to approval of the Register and on condition that they provide adequate accuracy, reproducibility and dependability of tests carried out for determination of material properties required by the Rules.

2.1.3 Types and procedures of special tests for the materials intended for specific use and evaluation criteria, if no instructions are contained in the Rules, shall be agreed with the Register.

2.1.4 When tests are carried out, the requirements of the standards or other regulating documents approved by the Register shall be met.

2.1.5 Samples, from which test specimens are cut shall have undergone the same treatment as the material, from which they have been taken (e.g. heat treatment). Test specimens shall be prepared in such a manner that properties of the material are not affected.

2.1.6 All the tests shall be carried out by competent personnel on testing machines of adequate capacity being maintained in the appropriate operating condition. The measurement accuracy of testing machines shall be within ±1 %. The machines shall be regularly, as a rule at least once per year, checked and calibrated by the duly designated national authorities.

The results of regular checks shall be submitted to the Register.

Charpy machines for impact tests shall be verified in accordance with the requirements of ISO 148-2 or another RS-agreed standard.

Machines for tensile/compression tests shall be verified in accordance with the requirements of ISO 7500-1 or another RS-agreed standard.

2.2 TESTING PROCEDURES FOR METALS

2.2.1 Temperature.

The temperature of the ambient air during the tests shall comply with the requirements of the standards unless expressly provided otherwise in the subsequent sections and chapters of this Part.

2.2.2 Tensile tests.

2.2.2.1 When carrying out tensile tests at the ambient temperature the following tensile properties of metals shall be determined:

.1 yield stress R_e is the value of stress measured at the commencement of plastic deformation at yield or the value of stress measured at the first peak obtained during yielding even when that peak is equal to or less than any subsequent peaks observed during plastic deformation at yield.

Elastic stress rate shall be within the limits specified in Table 2.2.2.1.1;

Table 2.2.2.1.1

Modulus of elasticity of the material E, N/mm^2	Stress rate, N/mm^2 s^{-1}	
	min	max
< 150000	2	20
≥ 150000	6	60

.2 when no well defined yield phenomenon exists, the 0,2 % proof stress $R_{p0,2}$ shall be determined according to the applicable specification.

For austenitic and duplex stainless steel products the 1 % proof stress R_{p1} may be determined in addition to $R_{p0,2}$.

The stress rate shall be as stated in 2.2.2.1.1;

.3 tensile strength R_m is the value of stress corresponding to the maximum strain rate directly before the test specimen fractures.

To determine the tensile strength R_m the test specimen is subjected to extension up to the fracture by the continuously rising strain rate. After reaching the yield stress or proof stress, for ductile material the machine speed during the tensile test shall not exceed that corresponding to a strain rate of 0,008 per second. For brittle materials, such as cast iron, the stress rate shall not exceed 10 N/mm^2 per second;

.4 fracture elongation A is the ratio of an increment of the gauge length after fracture to the original gauge length, expressed in %.

The elongation value is, in principle, valid only if the distance between the fracture and the nearest gauge mark is not less than one third of the original gauge length (L_0). However, the result is valid irrespective of the location of the fracture if the elongation value is equal to or greater than the expected value.

Elongation A_5 is usually determined on the small proportional test specimens when a gauge length is $5{,}65\sqrt{S_0} = 5d$. A_0 is determined on the non-proportional test specimens, for instance, with a gauge length L = 200 mm and calculated by the formula

$$A_0 = 2A_5\left(\frac{\sqrt{S_0}}{L_0}\right)^{0{,}40}, \%$$

Non-proportional test specimens are usually used for ferritic type steels of low and medium strength made without application of cold working;

.5 fracture reduction in area Z is the ratio of the difference between the original and the minimum cross-sectional areas of the test specimen after fracture to the original cross-sectional area, expressed in per cent. It is determined for test specimens of circular cross-section;

.6 when tensile tests are carried out at an elevated temperature, the test temperature shall be indicated by the inferior figure, for instance $R_{m/350}$, $R_{eL/350}$, $A_{5/350}$, Z_{350} where the number 350 is the test temperature in degrees Celsius.

2.2.2.2 For determination of the test specimen dimensions the following symbols are used, mm:

d = diameter of the parallel test length;
a = thickness of the parallel test length;
b = width of the parallel test length;
L_0 = gauge length;
L_c = parallel test length;
S_0 = cross-section;
R = transition radius;
D = external tube diameter;
t = rolled products thickness.

2.2.2.3 Tensile tests shall be carried out on the test specimens of the following types (refer to Fig. 2.2.2.3): Test specimens of rectangular cross-section with a gauge length equal to $L_0 = 5{,}65\sqrt{S_0}$ or of circular cross-section with a gauge length $L_0 = 5d_0$ are called proportional test specimens.

Proportional test specimens are preferable for tensile tests. The minimum elongation values given in this Part are specified for these specimens. The gauge length L_0 of the specimen shall preferably be greater than 20 mm.

The value of the specimen gauge length after its measuring may be rounded off to the nearest 5 mm, provided that the difference between this length and L_0 shall be less than 10 % of L_0.

Tensile tests for flats up to 40 mm thick shall be carried out with flat specimens of full thickness. It is allowed to reduce the specimen thickness by machining one of the rolled surfaces. The specimen thickness reduction shall be caused by the insufficient capacity of a testing machine.

Tests shall be carried out on the specimens according to Table 2.2.2.3.

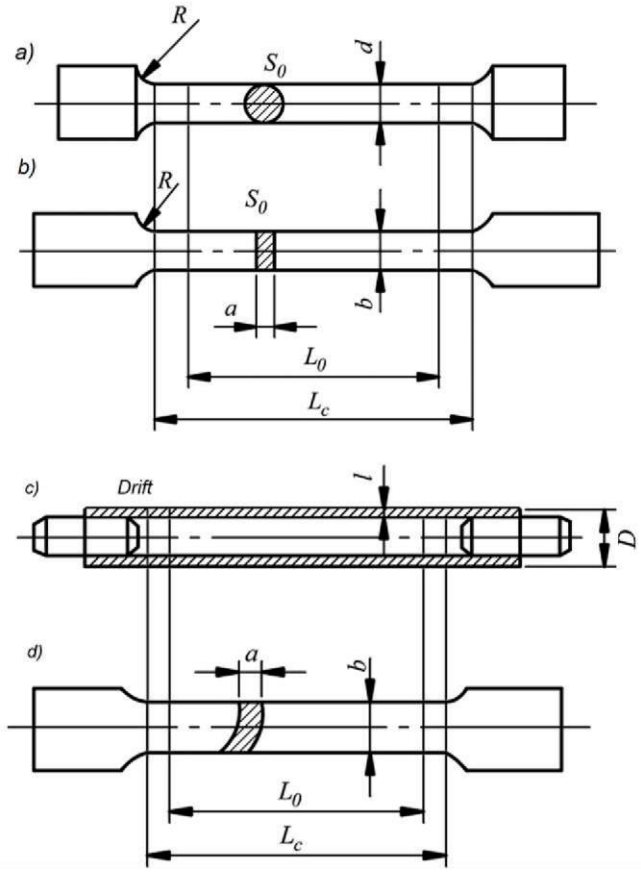

Fig. 2.2.2.3

Table 2.2.2.3

Semi-finished product	Specimen type	Specimen dimensions
Forgings, castings, bars	Fig. 2.2.2.3 (*a*)	Proportional round specimens $10 \leq d \leq 20$, preferably 14 mm $L_0 = 5d$ $L_c = L_0 + d/2$ $R = 10\,mm$ (for nodular cast iron and materials with $A_5 \leq 10$ %, $R \geq 1{,}5d$). For rods and products of small dimensions, test specimens of full thickness and with relevant other dimensions may be used. The axes of the round test specimens shall be located at approximately one quarter of the thickness from one of the rolled surfaces
		Proportional flat specimens
Plates, strips, sections	Fig. 2.2.2.3 (*b*)	*a* = *t* (*t* – plate thickness) *b* = 25 mm $L_0 = 5{,}65\sqrt{S_0}$ $L_c = L_0 + 2\sqrt{S_0}$ *R* = 25 mm for plate thickness *t* equal to or less than 12,5 mm the specimens may be allowed: $b = 2t$, $R = 2t$

Semi-finished product	Specimen type	Specimen dimensions
		Non-proportional flat specimens
		a = *t* (*t* – plate thickness) *b* = 25 mm L_0 = 200 mm L_c = 212,5 mm *R* = 25 mm When the capacity of the available testing machine is insufficient to allow the use of test specimen of full thickness, this may be reduced by machining one of the rolled surfaces. During weldability test the butt-weld and deposited metal are tested according to 2.2.2.8. For materials over about 40 mm thick, proportional round test specimens with dimensions as specified in Fig. 2.2.2.3 (*a*) may be used
		Full cross-section specimen with plugged ends
Tubes	Fig. 2.2.2.3 (*c*)	$L_0 = 5{,}65\sqrt{S_0}$ $L_c \geq 5{,}65\sqrt{S_0} + D/2$, where L_c is the distance between the grips or the plugs, whichever is the smallest
		Strips cut longitudinally
	Fig. 2.2.2.3 (*d*)	$a = t$ $b \geq 12\ mm$ $L_0 = 5{,}65\sqrt{S_0}$ $L_c = L_0 + 2b$ Round test specimens may also be used provided that the wall thickness is sufficient to allow the machining of such specimens to the dimensions as specified in Fig. 2.2.2.3 (*a*) with their axes located at the midwall thickness
Semi-finished products of wrought aluminium		According to 2.2.2.5

Test specimens for a tensile test, as a rule, shall be cut out so that their longitudinal axes were aligned with the metal basic deformation. Test specimens may be cut out transverse if there is the relevant instruction in sections of this Part. During the works initial survey the rolled plates can be tested using both the longitudinal and transverse test specimens.

2.2.2.4 For the determination of tensile strength R_m of nodular cast iron, test specimens of circular cross-section shown in Fig. 2.2.2.4 shall be used. For small size forgings and castings the specimens of the acceptable length and cross section size corresponding to the product cross section may be used.

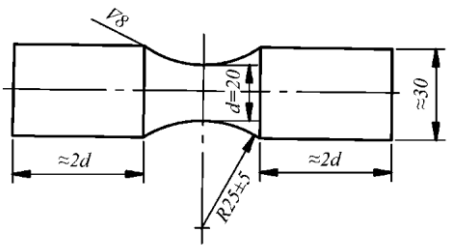

Fig. 2.2.2.4

2.2.2.5 Flat specimens shall be used in tensile tests of semi-finished products of wrought aluminium alloys for thicknesses up to and including 12,5 mm. The tensile test specimens shall be prepared so that both rolled surfaces are maintained. For semi-finished products over 12,5 mm thick, round tensile test specimens are used. Test specimens from semi-finished products up to 40 mm thick are cut out so that their axis is located in the middle of the thickness. Test

specimens from semi-finished products over 40 mm thick are cut out so that their axis is located at a distance from one of the surfaces equal tone quarter of the thickness.

2.2.2.6 When wire is tested, its specimens of full cross-section shall be of the following dimensions:

$L_0 = 200\,mm$,

$L_c = L_0 + 50\,mm$.

2.2.2.7 Through thickness tensile tests shall be carried out on test specimens the longitudinal axis of which is perpendicular to the rolling surface (direction Z, refer to Fig. 2.2.2.7-1).

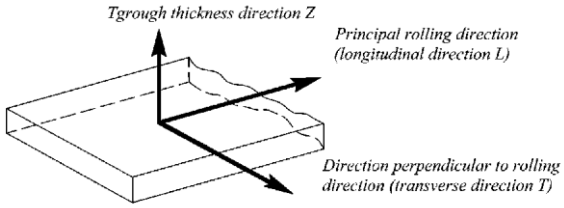

Fig. 2.2.2.7-1

Test procedures and dimensions of the round specimens shall comply with the RS-agreed national and international standards.

The testing scope is given in 3.14.4.

For plates and wide flats, one test sample shall be taken close to the longitudinal centreline of one end of rolled piece representing the batch as shown in Fig. 2.2.2.7-2.

The sample shall be large enough to accommodate the preparation of 6 specimens. 3 test specimens shall be prepared while the rest of the sample remains for possible retest.

The test is considered invalid and further replacement test is required if the fracture occurs in the weld or heat affected zone.

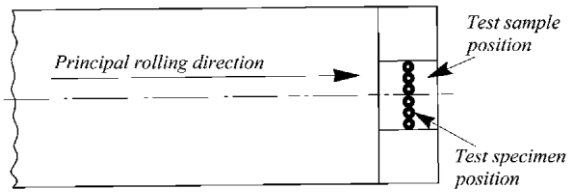

Fig. 2.2.2.7-2

The dimensions of specimens are selected depending on the rolled products thickness. For thicknesses up to 27 mm the specimens are recommended having diameter *d* = 4 mm with a variable parallel test length L_c to ensure using a solid specimen having no welded-on gripping parts. For thicknesses from 27 to 45 mm the specimens having a diameter *d* = 6 mm shall be used, for thicknesses over 45 mm — *d* = 10 mm.

2.2.2.8 In weldability tests (refer to 2.4) tensile test specimens shall have the following dimensions: For deposited metal tensile test:

d = 10 mm;

L_0 = 50 mm;

L_c ≥ 55 mm;

R ≥ 10 mm.

When necessary, the specimens of other dimensions may be used; the geometrical relationship of the above parameters therewith shall be observed;

for butt-weld tensile test (refer to Fig. 2.2.2.8):

a = t;

b = 12 mm for $t \leq 2$ mm;
b = 25 mm for $t > 2$ mm;
L_c = width of weld +60 mm;
$R \geq 25$ mm.

The upper and lower surfaces of the flat specimen weld shall be machined flush with the surface of the base metal.

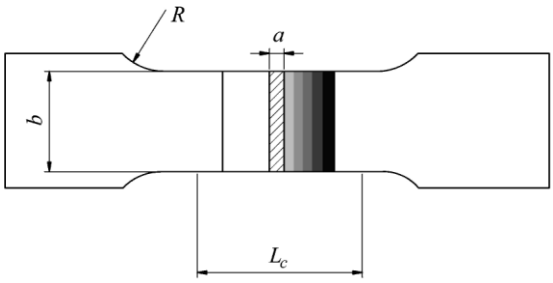

Fig. 2.2.2.8

Specimens are permitted:
$b = 2t$ for $t \leq 12{,}5$
$R = 2t$ for $t \leq 12{,}5$
$b = 25$ for $t > 12{,}5$
$R \geq 25$ for $t > 12{,}5$.

2.2.2.9 The tolerances on specimen dimensions given in 2.2.2 shall be in accordance with ISO 6892-84. If made according to the RS-agreed standards, the specimen deviations shall comply with these standards.

2.2.3 Impact tests.

2.2.3.1 The impact toughness *KCU* shall be determined on Charpy U-notch type test specimens as in Fig. 2.2.3.1-1 and Table 2.2.3.1-1, the impact energy *KV* and *KU* on Charpy V-notch type test specimensand Charpy U-notch type test specimens as in Figs. 2.2.3.1-2 and 2.2.3.1-3, and Tables 2.2.3.1-2 and 2.2.3.1-3.

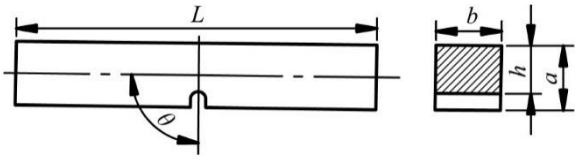

Fig. 2.2.3.1-1

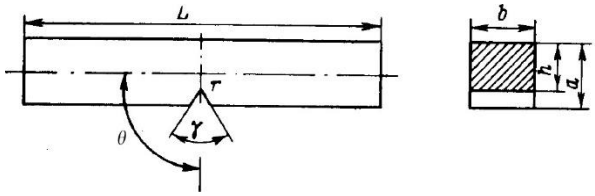

Fig. 2.2.3.1-2

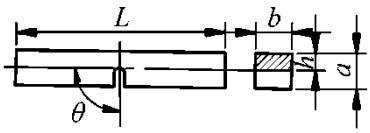

Fig. 2.2.3.1-3

Table 2.2.3.1-1

Dimensions	Nominal	Tolerance
Length *L*, mm	55	±0,60
Width *b*, mm	10	±0,10
Thickness *a*, mm	10	±0,10
Depth below notch *h*, mm	8	±0,10
Root radius *r*, mm	1	±0,10
Distance of notch from end of test specimen *L/2*, mm	27,5	±0,40
Angle between plane of symmetry of notch and longitudinal axis of test specimen θ, deg	90	±2

Table 2.2.3.1-2

Dimensions	Nominal	Tolerance
Length *L*, mm	55	±0,60
Thickness *a*, mm	10	±0,06
Width *b*, mm	10	±0,11
	7,5	±0,11
	5,0	±0,06
Angle of V-notch *γ*, deg.	45	±2
Depth of notch *h*, mm	8	±0,06
Root radius *r*, mm	0,25	±0,025
Distance of notch from end of test specimen *L*/2, mm	27,5	±0,042
Angle between plane of symmetry of notch and longitudinal axis of test specimen θ, deg.	90	±2
N o t e . For plate thickness *t* equal to or less than 10 mm, the width *b* in mm may be equal to *t* (full thickness) with no machining of the sides.		

Table 2.2.3.1-3

Dimensions	Nominal	Tolerance
Length *L*, mm	55	±0,60
Width *b*, mm	10	±0,11
Thickness *a*, mm	10	±0,11
Depth below notch *h*, mm	5	±0,09
Root radius *r*, mm	1	±0,07
Distance of notch from end of test specimen *L*/2, mm	27,5	±0,42
Angle between plane of symmetry of notch and longitudinal axis of test specimen θ, deg.	90	±2

The impact tests shall be carried out on Charpy machines complying with the requirements of ISO 148 or other RS-agreed national or international standard, and having a striking energy of not less than 150 J. Where the test temperature is other than ambient, the temperature of the text specimen at the moment of breaking shall be the specified temperature within ±2 °C.

The impact energy *KV* and *KU* is determined as an average value obtained at testing three specimens. The required mean values of the impact energy depending on the dimensions of the specimens selected for tests (*E* is the required minimum value of impact energy) are given in Table 2.2.3.1-4. The result of tests on one of the specimens therewith may be less than that given in Table 2.2.3.1-4, but its value shall not be less than 70 % of the required one.

Table 2.2.3.1-4

Dimensions of test specimen, mm	Average value of impact energy, J
10×10×55	1E
10×7,5×55	5/6E
10×5×55	2/3E

Impact energy *KV* for the rolled products having thickness *t* of less than 10 mm is determined under test specimens as in Fig. 2.2.3.1-2 with width *b* equal to rolled thickness with no machining of the sides. For welded joints of such rolled products, the impact energy *KV* is determined on machined specimens of maximum possible thickness considering removal of

weld undercuts. It is recommended to use welded specimens with thickness of *b* = 7,5, 5 and 2,5 mm.

The required impact value E(*b*) for specimens with width *b* < 10 mm may be calculated based on the required minimum average impact energy for specimens 10 mm wide (E_{10}) using formula

$$E(b) = (b/15 + 1/3)E_{10} \qquad (2.2.3.1.1)$$

rounding to the whole number in J. The test result for one of the specimens may be lower than the value calculated by the Formula (2.2.3.1.1), but it shall be equal to at least 70 % of the required one.

The tests on the rolled products with thickness of less than 6 mm shall be performed upon the Register request considering the requirements in 3.5. The tests on the rolled products with thickness of less than 2,5 mm shall not be performed.

The impact toughness *KCU* is determined as an average value obtained at testing two specimens. In this case, each of the impact toughness values obtained shall not be less than required. Necessity of testing impact toughness of material having a thickness of less than 10 mm as well as corresponding estimation criteria shall be justified in the documentation submitted to the Register.

2.2.3.2 The dimensions of the test specimens without any notch used for impact tests, in mm, shall be as shown in Fig. 2.2.3.2.

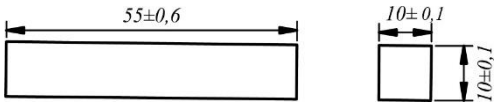

Fig. 2.2.3.2

2.2.3.3 Impact tests shall be carried out on Charpy machines having a striking energy not less than 150 J.

The distance between the supports shall be (40±0,5) mm. The pendulum shall break the test specimen in the plane of symmetry of the notch and from the side opposite to it, the distance between the plane of symmetry of the notch and that of the pendulum being not in excess of 0,5 mm.

When test temperature is below the room temperature, the test specimens shall be supercooled prior to installing on the Charpy machine. The degree of supercooling shall provide the required test temperature with maximum deviation of ±2 °C. The degree of supercooling shall be determined according to Table 2.2.3.3, if the test specimens are tested maximum 3 to 5 s after removal from the thermostat.

Table 2.2.3.3

Test temperature, °C	Super-cooling temperature, °C
–100 to –60	–4 –6
–60 to –40	–3 –4
–40 to +10	–2 –3

2.2.3.4 Strain ageing sensibility tests shall be carried out on specimens made of samples selected similar to impact samples. Unless otherwise specified, metal strips from which specimens are cut shall be subjected to extension deformation assuming 5 % residual elongation. Impact test specimens made of strips subjected to extension deformation are subject to even heating (artificial ageing) up to 250 °C, with 1 h conditioning at this temperature and subsequent cooling in the air. Impact tests of these specimens shall be carried out at room temperature (within 18 to 25 °C) and/or at temperature agreed additionally.

Unless otherwise specified, the hull structural steel strain ageing sensibility tests are required at the initial survey of the manufacturer, at procedure alterations and in doubtful or arguable cases related to the rolled products quality. At the initial survey and at the tests procedure alterations the tests shall be carried out according to the requirements of 1.3.5.3.6. In other cases the steel tests as a rule shall be carried out at room temperature and at the impact tests temperature for the submitted steel grade (e.g. –20 °C for grade D32 steel).

Unless otherwise specified, the hull structural steel strain ageing sensibility tests results shall comply with the Rules requirements for steel during impact tests (e.g. for grade D32 steel the average value of impact tests results shall not be less than 31 J at –20 °C with the steel thickness ≤ 50 mm — refer to Table 3.2.3).

When the above tests are carried out at temperatures lower than the prescribed for the submitted steel grade (e.g. for grade D32 steel – lower than –20 °C), the required average value of tests results is set forth by the steel manufacturer and shall be specified in the documentation submitted to the Register.

2.2.4 Hardness testing.

Hardness shall be determined according to Brinell (HB), Vickers (HV), Rockwell (HRC) or using any other method approved by the Register.

2.2.5 Technological tests.

2.2.5.1 The test specimens cut as shown in Fig. 2.2.5.1 shall be used for bend test.

Edges of the specimens on the tension side may be rounded to a radius of 1 to 2 mm.

The mandrel diameter and the angle of specimen bending is indicated in the relevant chapters of the Part. The bend test of plates and sections, and also the test of welded transverse specimens (both sides) shall be carried out on the test specimens of the following dimensions: $a = t$; b = 30 mm, t is the product thickness. Where the thickness of the product exceeds 25 mm, the test specimen may be machined on one side to a thickness of 25 mm. During the test the machined surface shall be on the compression side of the bend test specimen. With thickness of rolled products equal to or less than 12,5 mm, the following size of the test specimens is allowed: $a = t$, b is not less than the biggest from 1,5a or 20 mm.

The bend tests of forgings, castings and similar semi-finished products shall be carried out on the specimens having the following dimensions: a = 20 mm, b = 25 mm.

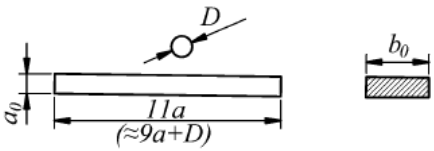

Fig. 2.2.5.1

2.2.5.2 Flattening tests are carried out on specimens (pipe lengths) having a length from 10 mm to 100 mm. The specimen ends shall be plain and smooth with their cuts perpendicular to the tube axis (ISO 8492).

2.2.5.3 Drift expanding tests are carried out on specimens made in accordance with the requirements of ISO 8493 (refer to Fig. 2.2.5.3).

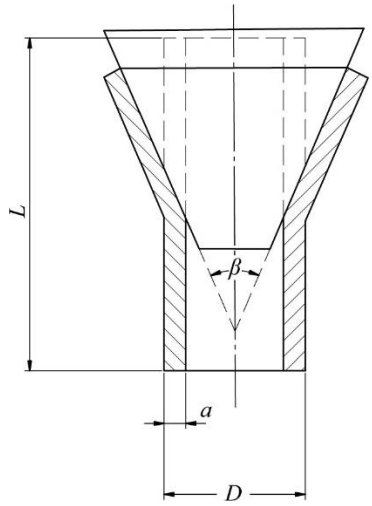

Fig. 2.2.5.3

For metallic tubes, the specimen length (tube length) *L* is equal to twice the external diameter *D* of the tube if the angle of the drift b is 30°, and *L* is equal to 1,5*D* if the angle of the drift is 45° or 60°. The test piece may be shorter, provided that after testing the remaining cylindrical portion is not less than 0,5*D*.

The rate of mandrel penetration shall not exceed 50 mm/min.

2.2.5.4 Ring tensile tests are carried out in accordance with the requirements of ISO 8496. The length of specimens (tube lengths) is equal to 15 mm and the rate in tests shall not exceed 5 mm/s.

2.2.5.5 Flanging tests are carried out on specimens (tube lengths) having a length of 1,5*D* in accordance with the requirements of ISO 8494 (refer to Fig. 2.2.5.5). The test piece may be shorter, provided that after testing the remaining cylindrical portion is not less than 0,5*D*.

The rate of mandrel penetration shall not exceed 50 mm/min.

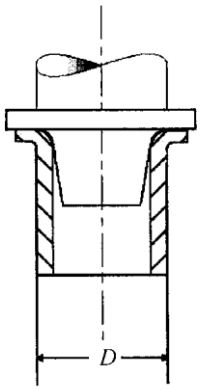

Fig. 2.2.5.5

2.2.5.6 Ring expanding tests are carried out in accordance with the requirements of ISO 8495 (refer to Fig. 2.2.5.6). The length of specimens (tube lengths) may vary from 10 mm to 16 mm and the rate of mandrel penetration shall not exceed 30 mm/s.

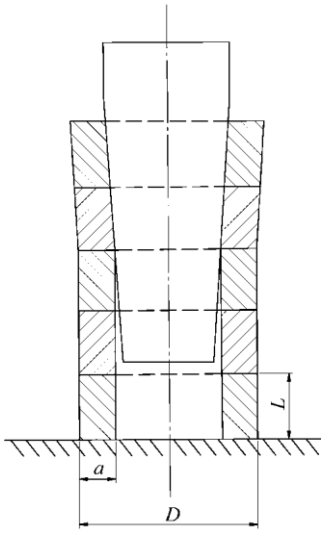

Fig. 2.2.5.6

2.2.6 Dropweight tests for determination of nil-ductility temperature (NDT).

2.2.6.1 General.

2.2.6.1.1 The main purpose of the testing is determination of brittle fracture development conditions in a material with thickness of at least 16 mm.

2.2.6.1.2 The test consists in impact bend loading of a number of specimens provided by a free-falling weight at a sequence of temperatures aimed at determination of a highest temperature at which standard specimens break, or nil-ductility temperature (*NDT*) at 5 °C intervals.

The deflection shall be limited by a stop in accordance with the applicable test standard.

2.2.6.2 Specimens for *NDT* determination.

2.2.6.2.1 The samples used for *NDT* test specimens shall be taken from places closest to places from which the samples for mechanical testing were taken. If for taking the samples gas cutting is used, the allowance for machining on each side shall not be less than 25 mm.

2.2.6.2.2 Where rolled product is tested, the specimen orientation in their manufacture, unless otherwise specified, shall be such that the longitudinal axes are perpendicular to the last semi-finished product rolling direction (predominant direction of metal deformation).

Manufacture of specimens from castings and forgings shall be performed according to the procedure agreed with the Register in compliance with the requirements of Section 2.

2.2.6.2.3 It is recommended to perform *NDT* determination for a series of nine specimens taken from the semi-product from one place.

2.2.6.2.4 The specimens to determine nil-ductility temperature are manufactured in accordance with ASTM E208 standard. Tests shall be carried out on the specimen types indicated in Table 2.2.6.2.4.

Table 2.2.6.2.4

Specimen type	Thickness	Width	Length
P-1	25 ± 2,5	90 ± 2,0	360 ± 2,0
P-2	19 ± 1,0	50 ± 1,0	130 ± 1,0
P-3	16 ± 0,5	50 ± 1,0	130 ± 1,0

The dimensions of specimens are chosen so that the specimen thickness shall be closest to the thickness of the semi-product subjected for the testing. Exception: if actual material yield strength exceeds 900 MPa, only specimens of types P-2 and P-3 are used.

2.2.6.2.5 As a rule, specimens are prepared by a mechanical method. No overheating of specimens is allowed. The specimen tension side shall not be subjected to machining except for cases of additional testing indicated in 2.2.6.2.7.

2.2.6.2.6 Serial specimens shall have the same orientation.

2.2.6.2.7 Employed for testing are rectangular specimens with brittle weld deposit on the non-machined tension side. In the deposit a notch is made across the specimen, from which a crack is propagated under an impact load.

Where rolled products are tested, additional tests shall be conducted at the specimens with the notch made as follows:

for the rolled steel with the thickness from 40 but less than 50 mm, from the middle thickness of the plate in the plate plane across the rolling direction (specimens of types P-1 or P-2);

for the rolled steel with the thickness of 50 mm and above, from the middle thickness perpendicular to the plate plane in such a way as to the direction of fracture propagation coincides with the rolling direction (specimens of type P-2).

2.2.6.2.8 Only the deposited metal shall be notched with monitored weld thickness under the notch bottom — 2 — 0,2 mm and width of the notch ≤ 1,5 mm.

2.2.6.2.9 The electrodes for brittle overlay (deposit) shall have the core diameter of 4 to 6 mm. Each batch of electrodes shall be checked to perform satisfactory as follows:

in addition to the main series of specimens of the product under study three more specimens shall be manufactured which, after a preliminary estimation of NDT temperature, shall be tested at a temperature of not lower than NDT +60 °C. Each of the tested specimens shall present a visually detected crack propagating from the notch in the deposited metal.

2.2.6.2.10 The brittle weld shall be deposited in a single run, placing it along the specimen in the centre of non-machined surface. The width of the deposit shall be 13 ± 2 mm, length 65 ± 5 mm, the bead height, approximately uniform along the whole length, shall be at least 4 mm but max. 8 mm, which can be achieved by selecting the appropriate welding procedures.

2.2.6.3 Equipment, jigs and fixtures, instrumentation.

2.2.6.3.1 The equipment, jigs and fixtures, and instrumentation shall comply with the requirements of the standards and these Rules and shall be periodically checked and calibrated by authorized national bodies.

2.2.6.3.2 The tests are carried out at an impact testing machine with a free-falling weight ensuring the impact energy from 330 to 1750 J. The impact energy is established according to ASTM E208 in accordance with the specimen type and actual material yield strength.

The necessary level of energy for a particular material and size of product is selected in accordance with the standards. The anvil manufactured of solid metal shall have hardness of 50 — 55 HRC.

2.2.6.4 The specimen is considered to be failed when the crack is propagated from the notch to at least one lateral edge of the specimen. When it is not evident that the crack is propagated until the lateral edge, but there is a groove at the uncut surface in the notch plane (the result of metal tightening during the test), the specimen shall be subject to thermal coloration and shall be broken completely for examination of the form and dimensions of the crack.

The specimen is considered to be failed when the crack is propagated at least to any lateral edge (the top of the crack is located at the distance not exceeding 3 mm from the lateral edge).

2.2.6.5 Validity conditions of obtained NDT values:

.1 the geometrical dimensions of the specimens shall be within the limits of standard tolerances;

.2 the weld-deposit notch is visibly cracked;

.3 the specimens in the course of bending reach the stop;

.4 the deposited layer on the specimens does not contact with the stop;

.5 the obtained value of the nil-ductility temperature is confirmed by testing of three specimens at the temperature of NDT + 5 °C, none of which was broken;

.6 the fitness of the electrodes used for brittle deposit has been proved.

2.2.7 Macro and micro structural analysis.

Where required by this or other Parts of the Rules, macro and micro structural analysis of metals shall be made in compliance with the relevant standards.

2.2.8 Chemical analysis.

The methods for determination of chemical composition of metals and permissible deviations are specified in relevant standards.

2.2.9 Non-destructive testing.

2.2.9.1 When radiographic testing is carried out, the results shall be recorded in the form of radiographs with a summary of test evaluations attached.

2.2.9.2 Ultrasonic testing shall be carried out using the pulse-echo methods. For control purposes dualsearch units are used.

To provide for more precise testing, single-dual and prismatic search unit use shall be approved by the Register. Good condition and accuracy of the test equipment shall be regularly checked. The size of permissible defects and criteria for their estimation are subject to agreement with the Register as a part of design documentation for the product.

The surface of the product shall provide a safe and uniform acoustic contact with the search unit. The ultrasonic testing is carried out after heat treatment at the stage of manufacture when the product has the simplest shape.

2.2.9.3 For magnetic particle testing only technique proved satisfactory in practice may be used. The material surface under test shall have appropriate intensity of the field.

A need in demagnetization of the product after completion of the test shall be specified in the technical documentation.

2.2.9.4 Testing methods other than those referred to in 2.2.9.1 — 2.2.9.3, as well as the relevant evaluation criteria shall be approved by the Register.

2.2.9.5 The evaluation of non-destructive testing results shall be made only by the works responsible for the results submitted to the Register. Records of testing shall be appended to the Register certificate in case non-destructive testing is required by the Rules.

2.2.10 Procedures for additional testing of base material and welding consumables intended for structures used at low temperatures.

2.2.10.1 The present procedures may be used in developing and correcting the programs needed in survey of manufacture of steel intended for use at low temperatures (refer to 3.5) including the steel marked with index "Arc" (refer to 3.5.3). The present provisions apply to:

procedures for determining the temperature of a ductile-brittle transition to estimate the material property with regard to retarding the spread of brittle failure (T_{kb}, *NDT, DWTT*);

procedures for determining crack resistance parameter CTOD for the base metal, the heat affected zone (HAZ) and weld metal in testing the specimens cut out from butt-welded joints.

Where one procedure for steel production is concerned (smelting, rolling, condition of supply), the results of tests carried out for the greatest thickness of rolled products may be extended to the rolled products with thicknesses smaller by 40 %, of all lower grades and strength levels where chemical composition, production technology and technology of thermal processing are identical to the tested material. At that, if, according to the calculations, the spread reaches the thickness of 10 mm and less, the minimum thickness approved by the Register shall exceed 10 mm.".

2.2.10.2 Tests for determination of ductile-brittle transition temperature T_{kb}.

2.2.10.2.1 General.

2.2.10.2.1.1 The T_{kb} temperature is a ductile-to-brittle transition temperature characterized by 70 % fibrous component in the fracture of a full-thickness specimen. The tests carried out for determination of T_{kb} allow evaluating cold resistance of the tested material, to compare cold resistance of various steels as well as to evaluate the temperature of brittle crack arrest in tested material.

2.2.10.2.1.2 The procedure for T_{kb} measurement involves the three-point bend testing of a series of steel specimens in full thickness till fracture. The tests are carried out at

successively lowered temperatures.

2.2.10.2.1.3 In the course of testing control is effected over the area of crystalline (brittle) or fibrous (ductile) components in the specimen fracture and over the test temperature. Moreover, upon completion of the tests, the existence of cleavage in the fracture within the fibrous component is estimated. In case of multiple cleavage or single cleavage that extends for more than one-half the specimen high (specimen high minus notch depth) an entry shall be made in the test report and the estimation of $T_{d(Tkb)}$ temperature of material usability is deemed invalid.

2.2.10.2.1.4 To determine T_{kb}, a temperature curve of average percentage of fibrous component in the fracture of specimens is created. It is recommended to carry out the tests in the following temperature range, two specimens for one temperature value with max. intervals 20 °C.

.1 for steel with thickness of less than 50 mm: –20 °C, –40 °C, –60 °C, etc., to the temperature when the fibrous component in the fracture does not exceed 50 %;

.2 for thermally improved steel and TM steel: 0 °C, –20 °C, –40 °C, –60 °C, etc.;

.3 for steel with thickness exceeding 50 mm: 20 °C, 0 °C, –20 °C, –40 °C, –60 °C, etc.

Then with 5 °C interval, minimum temperature is determined when the average percentage of fibrous component in the fracture is not less than 70 % and check tests under this temperature shall be carried out.

2.2.10.2.2 Specimens for determination of T_{kb}

2.2.10.2.2.1 The samples used for preparation of T_{kb} specimens shall be taken from places closest to those from which the samples for mechanical testing were taken.

2.2.10.2.2.2 The specimen orientation, unless otherwise specified, shall be such that the longitudinal axes are perpendicular to the last rolling direction (principal direction of metal deformation). Orientation of each specimen is indicated in the test record.

2.2.10.2.2.3 It is recommended to determine T_{kb} by testing a series of 12 specimens taken from one place of the semi-finished product.

2.2.10.2.2.4 The specimens shall be prepared using a mechanical method. It is permitted to use gas or plasma cutting for specimen cutting, provided that the bearing and loaded surfaces are subjected to machining to provide parallelism between them and perpendicularity of the plate.

2.2.10.2.2.5 The dimensions of specimens made of metal in full thickness shall meet the requirements of Table 2.2.10.2.2.5. The radius of top notch in flat prismatic specimens shall be equal to half the notch width.

Table 2.2.10.2.2.5

Thickness, mm	Length, mm	Height, mm	Notch depth, mm	Notch width, mm
Above 10 to 14	288 + 20	60 + 5	20 + 5	3 + 3
Above 14 to 32	400 + 20	90 + 5	30 + 5	3 + 3
Above 32 to 60	520 + 20	120 + 5	40 + 5	5 + 5
Above 60 to 100	640 + 20	150 + 5	75 + 5	5 + 5
Above 100	6 thicknesses + 20	1,5 thicknesses + 5	0,75 thickness + 5	10 + 5

2.2.10.2.3 Equipment, jigs and fixtures, instrumentation.

2.2.10.2.3.1 The equipment, jigs and fixtures, and instrumentation shall comply with the requirements of the standards and these Rules and shall be periodically checked and calibrated by authorized national bodies.

2.2.10.2.3.2 The stress rate under testing shall be monitored when moving the loading yoke and shall be 1,00 mm/with a tolerance of –0,2.

2.2.10.2.4 The procedure for determination of the fibrous component in the fractures.

2.2.10.2.4.1 After testing the compliance of the fracture type shall be determined within

the account area based on one or several types of failure shown in Fig. 2.2.10.2.4.1. When combining the failure types, the total area of the crystalline component shall be evaluated according to the principle accepted for the failure type III:

.1 the area of the crystalline component S_{cr} shall be measured by manual measuring tool, the portion of the fibrous component S_d shall be calculated;

.2 the same portion of the fibrous component S_d shall be calculated by the digital photo of the specimen fracture;

.3 the values obtained by both methods shall be compared. In case their difference exceeds 5 %, the procedure of measurements and calculations shall be changed. The value, measured by the photo, shall be preferable.

The standard area S_0 is a fracture area where the availability of crystalline and fibrous components shall be determined after testing. Standard area dimensions shall be specified prior to the test.

Fibrous component in the fracture (fibrous, ductile) is of dull grayish colour with specific "fibres", usually with thickness reduction and plastic deformation of section, includes the shear zones at side edges of the specimen located at an angle to the notch plane of the specimen.

Crystalline component in the fracture (cleavage, crystalline) is a part of the fracture with no thickness reduction and visible traces of plastic deformation. Usually it has metallic shine, for high-strength steel it may be distinguished only by lighter shade. Crystalline component stains may be located both in the notch plane and at the significant angle to it.

Failure in the form of "arrow" means the triangular fracture areas with alternate strips of smaller scale. These areas may be considered as fibrous component when they are located at the shear lips. Otherwise, the fracture area corresponding to this failure type shall be considered both as fibrous and crystalline components at the ratio 1:1, when no fractographic examinations were conducted.

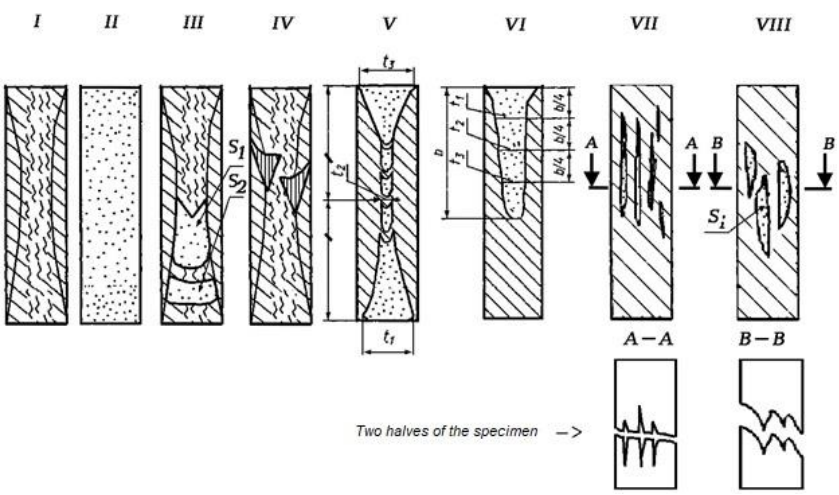

Fig. 2.2.10.2.4.1 Failure types within the account area

Alternating failure means vertical crystalline strip in the fracture with thin straps of the fibrous component.

Separations mean narrow slots, projections and hollows, "ears" in the fracture, parallel to loose face of metal on one or both mating failure surfaces. They are generated during the testing. Areas of crystalline component located on the surfaces of separations are not taken into account at fracture evaluation.

The procedure of referring the fracture areas to the crystalline type (cleavage fracture) and calculating the area of crystalline component S_{cr} in compliance with Fig. 2.2.10.2.4.1:

I — fibrous component, dull surface, S_{cr} = 0, S_d = 100 %;

II — crystalline component, S_{cr} = S_0, S_d = 0 %. When shear lips exist, they shall not be considered when their width does not exceed 0,5 mm per the side;

III — individual spots of the crystalline component: $S_{cr} = \sum S_i$;

IV — the areas of the arrow shape shall be considered as the crystalline component with the reduction factor, when they are not located at the shear lips: $S_{cr} = 0{,}5 \sum S_i$;

V — alternating failure;

$$S_{cr} = S_0 \times (\frac{t_1+t_3}{2} + t_2)/2t,$$

where t — thickness of undeformed specimen prior to testing. Fibrous straps shall not be considered when the crystalline spots are located along the entire fracture height, otherwise the fracture shall be referred to type III;

VI — crystalline ear;

$$S_{cr} = \left(\frac{t_1+t_2+t_3}{3}\right) b,$$

where b — the ear length;

VII — separations perpendicular to the fracture surface shall not be considered as the crystalline component. S_{cr} = 0, S_d = 100 % (both halves of the specimen shall be analyzed). The maximum separation height is measured in the fracture surface and shall be specified in the test report;

VIII — area of crystalline spots located at the angle to the notch surface shall be considered in the projection to the notch plane. At the significant deviation from the notch plane both halves of the specimen shall be analyzed to differentiate the failure types VII and VIII.

2.2.10.2.5 Validity conditions of obtained T_{kb} values**.**

2.2.10.2.5.1 The geometrical dimensions of the specimens shall be within the limits of standard tolerances.

2.2.10.2.5.2 The error of the required specimen temperature measurement in its notched cross-section does not exceed ± 2 °C within the range from 150 to –200 °C.

2.2.10.2.5.3 The error in determination of the quantity of fibrous or crystalline component in the specimen fracture does not exceed ± 5 % of the fracture area.

2.2.10.2.5.4 The obtained value of T_{kb} is the minimum test temperature with maximum 5 °C interval confirmed by testing of three test specimens. The average value of fibrous component in the fracture shall not be less than 65 % (and no individual value shall be less than 60 %).

2.2.10.3 Test for determining NDT temperature – in accordance with 2.2.6.

2.2.10.4 Tests for determining temperature *DWTT*.

The temperature *DWTT* shall be determined in drop-weight testing as the temperature corresponding to 70 % of a fibrous component in the fracture of a full-thickness specimen with a sharp notch being broken down in shock loading at a rate of 5 to 8 m/s. The main specimen dimensions: height = 75+2 mm, length = 300+5 mm, space between support *s* = 252±2 mm.

The tests are carried out for rolled products with thickness equal to 7,5 mm and up to 40 mm according to the procedure agreed with the Register. For rolled products with thickness over 19 mm the specimens with thickness equal to 19 mm cut out from the mid-thickness of rolled products on thickness may be tested. In this case the *DWTT* is higher in comparison with the temperature of full thickness: having rolled products' full-thickness of over 19 mm and above 30 mm at 10 °C, having rolled products' thickness of over 31 and above 40 mm — at 15 °C. The test procedure is in accordance with Appendix IV "Special test procedures" of the Rules for the Classification and Construction of Subsea Pipelines. Procedure for attributing fracture sections to a crystalline type in compliance with 2.3.2, Part XII "Materials" of the Rules for the Classification, Construction and Equipment of Mobile Offshore Drilling Units and Fixed Offshore Platforms.

2.2.10.5 Tests for determining crack resistance parameter *CTOD* for base metal, heat-

affected zone (HAZ) and weld metal.

2.2.10.5.1 General.

2.2.10.5.1.1 The principal goal of testing is control over certain type of material fracture in presence of a crack within the climatic temperature range. The tests shall define the crack resistance parameter *CTOD* (crack tip opening displacement) at static loading.

The *CTOD* is one of the listed below crack opening values connected with a certain type of crack propagation and calculated in accordance with the recognized standards:

δ_c — when before the beginning of non-stable fracture (brittle crack propagation) its mean stable extension was less than 0,2 mm;

δ_u — when before the beginning of non-stable fracture (brittle crack propagation) its mean stable extension exceeded 0,2 mm;

δ_m — when the maximum load was reached without non-stable fracture.

2.2.10.5.1.2 To define the *CTOD* value fatigue precracked specimens are used and tested at a specified travel speed of the test machine loading cross-piece ensuring the stress intensity factor growth rate within $(0{,}5 - 1{,}5)\ \mathrm{MPa} \cdot \frac{m^{0,5}}{s}$ during linear elastic specimen deformation. The specimens are loaded up to the fracture (total or partial) or until the maximum force recorded in plastic deformation is exceeded.

2.2.10.5.2 Specimens for *CTOD* testing.

2.2.10.5.2.1 Samples for preparation of specimens for *CTOD* testing shall be taken from areas nearest to those where samples for tensile and impact tests are taken.

2.2.10.5.2.2 Orientation of specimens in the course of manufacture shall be such, unless otherwise specified, that the direction of crack propagation shall coincide with the direction of the last rolling (principal direction of metal deformation).

2.2.10.5.2.3 It is permitted to test specimens manufactured from semi-finished products having angular deformations and curvature (for example, pipes). In such cases the samples can be straightened taking care that load application points are located at a distance of at least equal to the specimen thickness from the line of notch, and the notch zone shall not suffer from strains affecting the test results.

2.2.10.5.2.4 For specimens with residual stress and those subjected to straightening, mechanical removal of residual stress is permitted. The heat treatment in this case is not allowed. It is recommended to use for mechanical relieving of residual stress a method consisting in local compression of specimen side surfaces applied in the notch tip zone, with plastic deformation of the specimen not exceeding 0,5 % of the specimen thickness on each side. For this purpose, punches of sufficient pressure area shall be used to achieve specimen covering in one run if possible. It is necessary to ensure the notch tip covering.

2.2.10.5.2.5 When evaluating the crack resistance of the HAZ (heat-affected zone) the notch shall be made so that the crack tip, on the largest possible length of its front, could be located in a layer of supposedly minimum toughness. To achieve this, it is recommended to use welding with special edge preparation (K- or asymmetrical V- weld with single bevel). The welding procedure shall be approved by the Register.

Special attention shall be paid to employed welding consumables and heat input. The heat input shall be:

not less than 35 kJ/cm in general case;

not less than 50 kJ/cm for steel intended for welding under high heat input. At that the heat input shall be equal to the maximum input applied during survey of steel with index "W".

When testing HAZ metal it is recommended to provide weld metal testing for applied technological welding process by making a notch in the weld metal at the distance of 1 mm from the fusion line. The results of these tests shall be taken into account to determine correctness of data obtained for specimens with notch marking on the HAZ metal if the initial fatigue crack front containing more brittle non-target structural components has been reported by metallographic analysis.

Before application of marking and before notching the specimen, it is necessary to perform the etching and to investigate the heat-affected zone metal structure. Unless otherwise indicated, estimated minimum toughness zones shall be tested, where HAZ-I shall be a zone of the largest grain size and maximum overheating at welding and HAZ-II shall be a zone of partial recrystallization. It is necessary to consider the width of structure portions equal to 0,5 mm measured inside HAZ from fusion line (for HAZ-I) and from the pickling edge (for HAZ-II).

For both zones it is necessary to obtain at least three correct test results. Total number of notched specimens on HAZ in the series is up to 12 for one test temperature value, as some results may not satisfy conditions of test correctness specified in 2.2.10.5.5.

2.2.10.5.2.6 For testing with notch location within the fusion line or some other suitable microstructure it is considered sufficient, if in the initial fatigue crack front there is a portion of suitable microstructure of about 15 % specimen thickness length, unless otherwise specified by the Register. For testing with the notch located in the weld centre it is considered sufficient to have 70 % of weld metal within the initial crack front.

2.2.10.5.3 Types of specimens.

2.2.10.5.3.1 For the purpose of testing specimens of the following types are prepared:

.1 rectangular cross-section specimens for threepoint bending;

.2 compact specimens for eccentric tension;

.3 square cross-section specimens for threepoint bending.

The thickness of test specimens *t* shall be not less than 85 % of full thickness of the semi-product. For semi-products with thickness more than 80 mm the thickness of test specimen is allowed to be reduced in comparison with the full thickness of the semi-product *S* more than by 15 % but not exceeding 50 % that shall result in reduction of the test temperature by $17\ln\left(\frac{S}{t}\right)$ °C.

2.2.10.5.3.2 Test specimens of rectangular cross-section *t* x (2*t*) for threepoint bending are principle. To reduce metal intensity and simplify tests of base metal and welded joint metal it is allowed to apply compact specimens with thickness closest to the full thickness of the semi-product from the following range: 25 mm, 50 mm, 75 mm, 100 mm. For the same purpose, to test heat-affected zone (HAZ) metal and welded joint metal with thickness of 40 mm and more it is permitted to apply square cross-section specimens for threepoint bending *t* x *t*.

2.2.10.5.4 Equipment, jigs and fixtures, instrumentation.

2.2.10.5.4.1 In general the equipment, jigs and fixtures, as well as measuring apparatus shall meet the requirements of the standards and these Rules and shall be periodically checked and calibrated by authorized national bodies.

2.2.10.5.4.2 Hydraulic servomotor-operated or electromechanical machines with the upper limit of operating load range between 100 and 3000 kN capable of applying force at rates specified by 2.2.10.5.1 and force measuring error not exceeding ± 0,1 % of the operating range upper limit, shall be employed as the machines for testing. The systems for measuring of applied forces and recording of the results shall allow the applied force to be recorded against notch edges opening.

2.2.10.5.4.3 The jigs and fixtures for three-point bend tests shall allow the support rollers to rotate and move apart slightly, thus maintaining rolling contact throughout the test. The roller diameter shall be from 0,5 to 1,0 of the specimen height.

2.2.10.5.4.4 The arrangements for loading of compact specimens (clevis and pin) shall permit alignment as the specimen is loaded, for which purpose the gap between the specimen and clevis inner surfaces shall be increased to 0,5 to 1,0 mm and shall prevent pins jamming during the specimen plastic deformation.

2.2.10.5.4.5 The error in test temperature measurement shall not exceed ± 1,5 °C. The temperature shall be measured by thermoelectric temperature transducers provided with secondary measuring devices complying with the accuracy grade not lower than 0,5.

2.2.10.5.4.6 The crack edges opening is measured by means of displacement gauges with base length of 5,0 to 12,5 mm, with measuring range from ±10 % to ±50 % counting from

the base. If the above are employed, the displacement measuring error shall not exceed ± 1,5 % from the upper boundary of the operating range.

2.2.10.5.4.7 The displacement gauges shall be subjected to a calibration check before starting a new series of measurements of identical specimens. It is especially important for low temperature testing. If a gauge is properly isolated from the specimen, the calibration may be done at room temperature.

The calibration error shall not exceed 0,003 mm.

2.2.10.5.5 Validity conditions of received *CTOD* values.

2.2.10.5.5.1 The geometrical dimensions of specimens shall be within the standard tolerances.

2.2.10.5.5.2 The crack length/specimen height ratio shall be within the range from 0,45 to 0,55 for all types of specimens.

2.2.10.5.5.3 The fatigue crack extent shall make at least: 1,3 mm or 2,5 % of the specimen height whichever is greater.

2.2.10.5.5.4 The difference between any two measurements of the initial fatigue crack length shall not exceed 10 % of the crack length mean value for the above measurements. When making the measurements in the heat affected zone, the tolerance may be increased to 20 %.

N o t e . The length of initial fatigue crack is measured at nine equally-separated points where extreme points are located at the distance of 0,01*t* from lateral surfaces of the specimen in the place of maximum reduction after testing.

2.2.10.5.5.5 When testing the metal of heat-affected zone, it is considered sufficient if the initial fatigue crack front contains a specified microstructure portion with the length equal to 15 % within average three quarters of the specimen thickness.

2.2.10.5.6 Determination of the *CTOD* test result.

2.2.10.5.6.1 The *CTOD* value of base metal and weld metal for this temperature shall be determined as the mean value of the test results under the following conditions:

when obtaining three-four correct test results, none of the obtained results shall be equal to less than 70 % of the mean value for the base metal and less than 50 % for the weld metal.

When obtaining five and more correct test results, the lowest result may be discarded. Other results shall not be less than 70 % of the mean value for the base metal and less than 50 % for the weld metal.

Where the above conditions are not complied with, the minimum recorded value of this parameter shall be taken as *CTOD* value.

2.2.10.5.6.2 Non-stable failure of specimen is full or partial destruction (crack overshoot) of the specimen, at which falling of load is recorded, as well as non-controlled rising of displacements by more than 1 %.

2.2.11 Test method (algorithm) for properties of steel plate arrest brittle crack with thickness from 50 to 100 mm.

2.2.11.1 Test Method for Brittle Crack Arrest Toughness, K_{ca}.

Setting a temperature gradient in the width direction of a test specimen, and applying uniform stress in the transverse crack propagation direction to the test specimen to determine K_{ca}, the test specimen shall be struck to initiate a brittle crack from the mechanical notch at the side of the test specimen (temperature gradient type arrest testing).

Using the stress intensity factor, the brittle crack arrest toughness, K_{ca}, shall be calculated from the applied stress and the arrest crack length. This value is the brittle crack arrest toughness at the temperature of the point of crack arrest (arrest temperature). To obtain K_{ca} at a specific temperature followed by the necessary evaluation, the method specified in 2.2.11.2 may be used.

As a method for initiating a brittle crack, a secondary loading mechanism may also be used in accordance with 2.2.11.3.

2.2.11.1.1 Scope of application.

Requirements of 2.2.11.1 apply to the test method for brittle crack arrest toughness (i.e. K_{ca}) of steel using fracture mechanics parameter. They are applicable to hull structural steels with the thickness over 50 mm and not greater than 100 mm in accordance with 3.2 or 3.19.

2.2.11.1.2 Symbols and their significance.

The symbols and their significance used in 2.2.11.1 are shown in Table 2.2.11.1.2.

Table 2.2.11.1.2

Symbol	Unit	Significance
a	mm	Crack length or arrest crack length
E	N/mm^2	Modulus of longitudinal elasticity
E_i	J	Impact energy
E_s	J	Strain energy stored in a test specimen
E_t	J	Total strain energy stored in tab plates and pin chucks
F	MN	Applied load
K	N/mm$^{3/2}$	Stress intensity factor
K_{ca}	N/mm$^{3/2}$	Arrest toughness. Crack resistance parameter *CTOD* is the critical value of the stress intensity factor being the crack arrest, running along the brittle mechanism in the specific crack material.
L	mm	Test specimen length
L_p	mm	Distance between the loading pins
L_{pc}	mm	Pin chuck length
L_{tb}	mm	Tab plate length
T	°C	Temperature or arrest temperature
t	mm	Test specimen thickness
t_{tb}	mm	Tab plate thickness
t_{pc}	mm	Pin chuck thickness
W	mm	Test specimen width
W_{tb}	mm	Tab plate width
W_{pc}	mm	Pin chuck width
x_a	mm	Coordinate of a main crack tip in the width direction
X_{br}	mm	Coordinate of the longest branch crack tip in the width direction
y_a	mm	Coordinate of a main crack tip in the stress loading direction
y_{br}	mm	Coordinate of the longest branch crack tip in the stress loading direction
σ	N/mm^2	Applied stress
σ_{Y0}	N/mm^2	Yield stress at room temperature

2.2.11.1.3 Testing equipment.

The present requirements apply to the testing machine needed for conducting the brittle crack arrest test. Testing machine is used to apply tensile force to an integrated specimen, and impact equipment is used to generate a brittle crack on the test specimen.

2.2.11.1.3.1 Testing machines.

2.2.11.1.3.1.1 Loading method.

Tensile load to an integrated specimen shall be hydraulically applied by testing machines.

The loading method to an integrated specimen using the testing machine shall be of a pin type. The stress distribution in the plate width direction shall be made uniform by aligning the centers of the loading pins of both sides and the neutral axis of the integrated specimen.

2.2.11.1.3.1.2 Loading directions.

The loading directions shall be either vertical or horizontal. In the case of the horizontal direction, test specimen surfaces shall be placed either perpendicular to the ground.

2.2.11.1.3.1.3 Distance between the loading pins.

The distance between the loading pins shall be approximately 3,4*W* or more (where *W* is the width of the test specimen). Since the distance between the loading pins sometimes has an

effect on the load drop associated with crack propagation, the validity of the test results is determined by the judgment method described in 2.2.11.1.7.1.

2.2.11.1.3.2 Impact equipment and impact methods.

Methods to apply an impact load to an integrated specimen shall be of a drop weight type or of an air gun type.

The wedge shall be hard enough to prevent significant plastic deformation caused by the impact. The wedge thickness shall be equal to or greater than that of the test specimen, and the wedge angle shall be greater than that of the notch formed in the test specimen and have a shape capable of opening up the notch of the test specimen.

2.2.11.1.4 Test specimens.

2.2.11.1.4.1 Test specimen shapes

The standard test specimen shape is shown in Fig. 2.2.11.1.4.1. Table 2.2.11.1.4.1 shows the ranges of test specimen thicknesses, widths and width-to-thickness ratios.

The test specimen length shall be, in principle, equal to or greater than its width *W*.

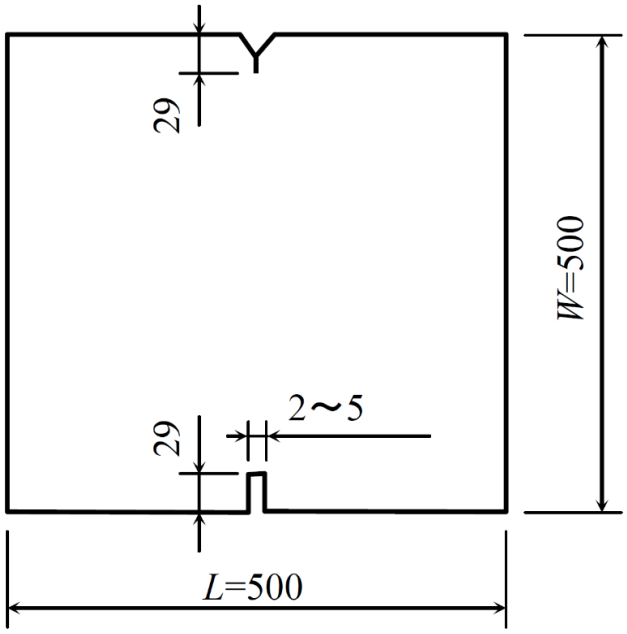

Fig. 2.2.11.1.4.1

Table 2.2.11.1.4.1

Dimensions of test specimens

Test specimen thickness, *t*	50 mm ≤ *t* ≤ 100 mm
Test specimen width, *W*	350 mm ≤ *W* ≤ 1000 mm (Standard width: *W* = 500 mm)
Test specimen width / test specimen thickness, *W/t*	*W/t* ≥ 5

2.2.11.1.4.2 Shapes of tab plates and pin chucks.

The definitions of the dimensions of the tab plates and pin chucks are shown in Fig. 2.2.11.1.4.2-1. Typical examples of different structures of an integrated specimen are shown in Fig. 2.2.11.1.4.2-2.

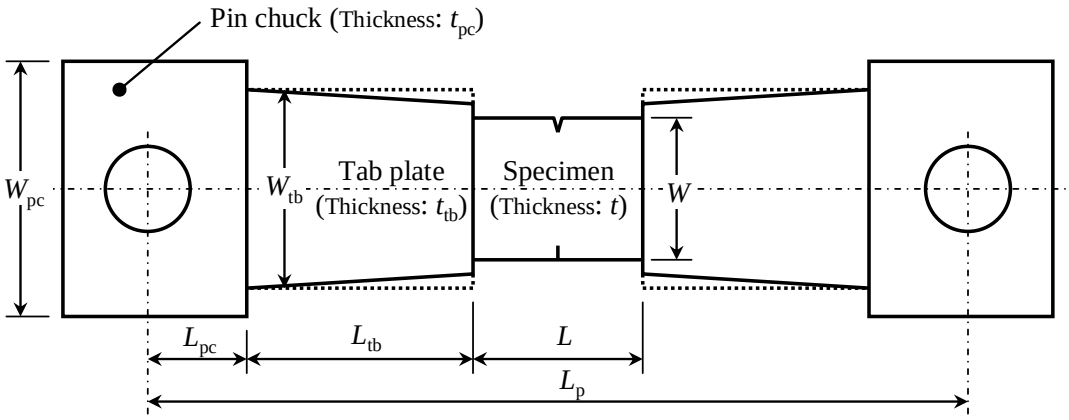

a)

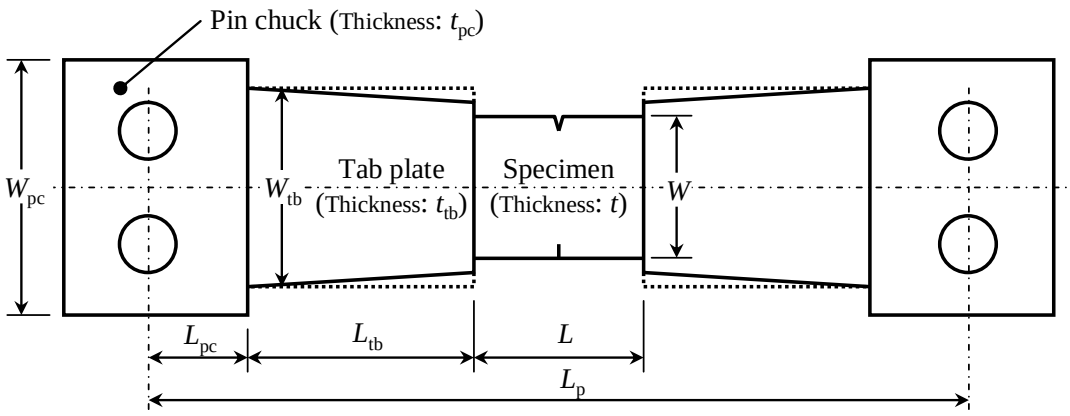

b)

Fig. 2.2.11.1.4.2-1 Definitions of the dimensions of the tab plates and pin chucks:
a) — Single-pin type; *b)* — Double-pin type

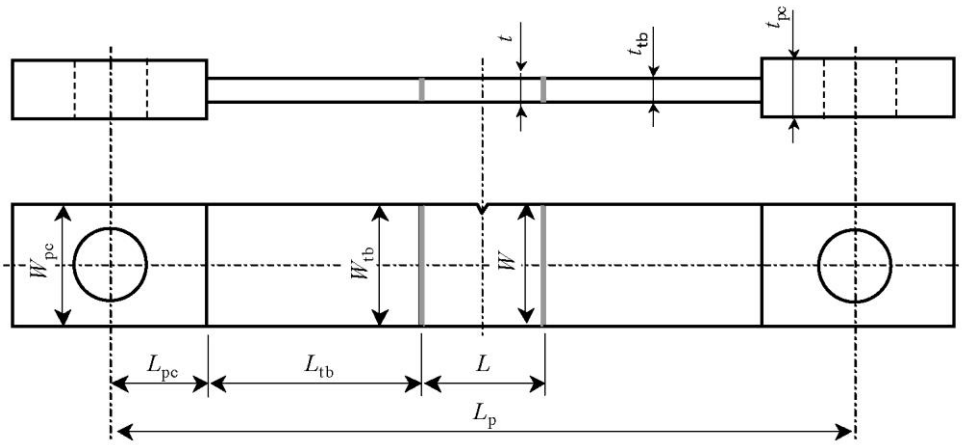

a) example 1

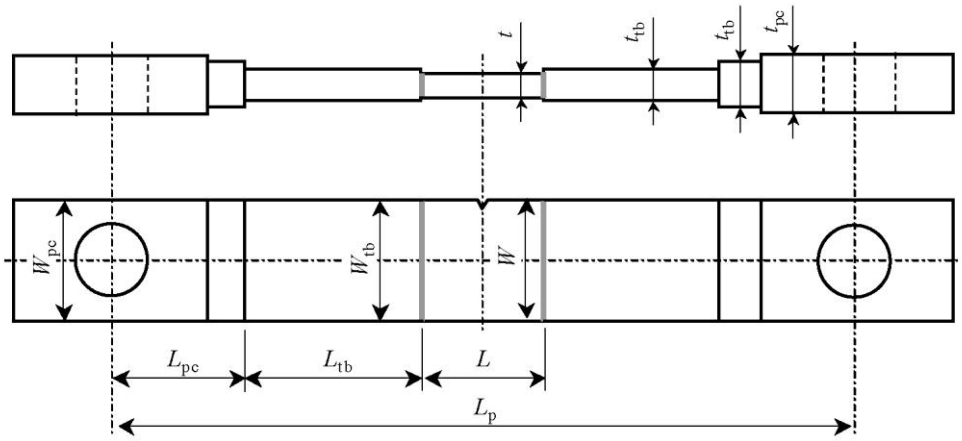

b) example 2

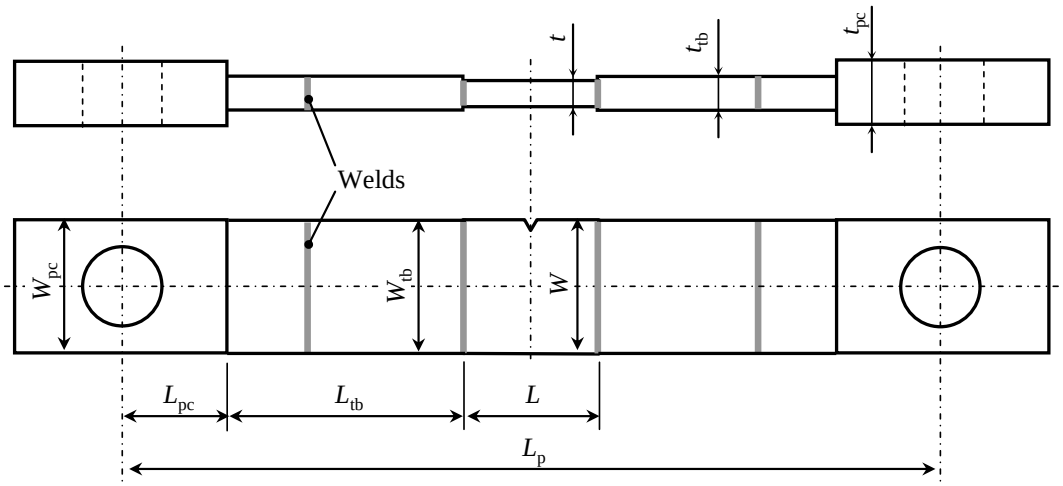

c) example 3

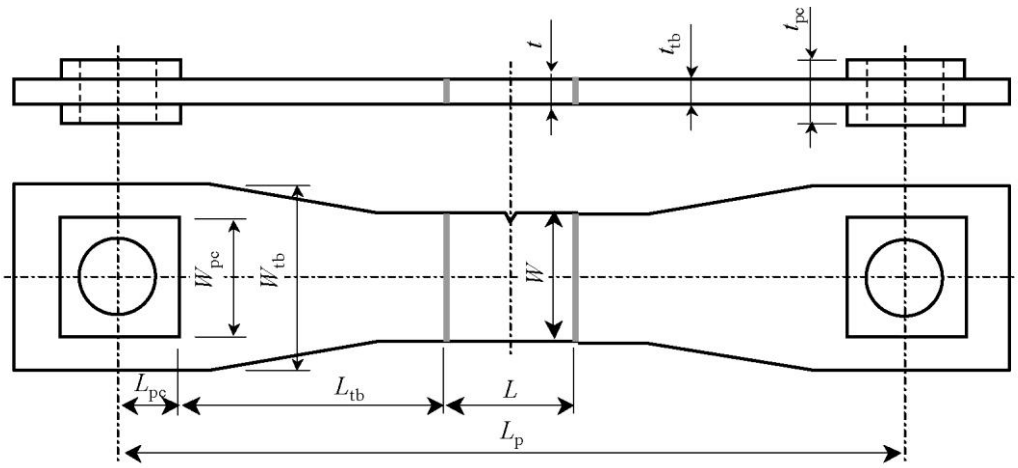

d) example 4

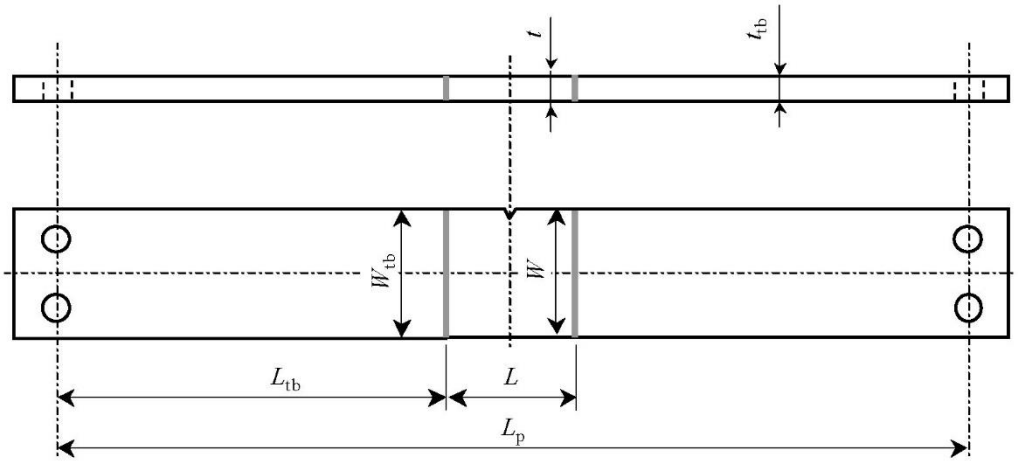

e) example 5

Fig. 2.2.11.1.4.2-2 Examples of shapes of tab plates and pin chucks

2.2.11.1.4.2.1 Tab plates.

The tolerances of tab plate dimensions are shown in Table 2.2.11.1.4.2.1. When the lengths of the tab plates attached to both ends of a test specimen are different, the shorter length shall be used as the tab length, L_{tb}.

Table 2.2.11.1.4.2.1

Tolerances of tab plate dimensions

Tab plate thickness, t_{tb}	$0{,}8t \le t_{tb} \le 1{,}5t$
Tab plate width, W_{tb}	$W \le W_{tb} \le 2{,}0W$
Total length of a test specimen and tab plates, $L + 2L_{tb}$ (Total length of a test specimen and a single tab plate $L + L_{tb}$)	$L + 2L_{tb} \ge 3{,}0W$ $(L + L_{tb} \ge 2{,}0W)$
Tab plate length/Tab plate width	$L_{tb}/W \ge 1{,}0$

2.2.11.1.4.2.2 Pin chucks.

The pin chuck width W_{pc} shall be in principle equal to or more than the tab plate width W_{tb}.

The pin chucks shall be designed to have a sufficient load bearing strength. When pin chucks attached to both ends of an integrated specimen are asymmetric, the length of the shorter one shall be used as the pin chuck length L_{pc}.

The distance between the pins L_p is obtained from the equation $L_p = L + 2\,L_{tb} + 2L_{pc}$. In the case as shown in Fig. 2.2.11.4.2-2, *e*, L_p is obtained by setting $L_{pc} = 0$.

2.2.11.1.4.3 Welding of test specimen and tab plates.

Test specimen, tab plates, and pin chucks shall be connected by welding. The welds shall have a sufficient force bearing strength to avoid their arrest toughness during testing.

The flatness, angular distortion and linear misalignment of the weld between a test specimen and a tab plate shall be prior and after preloading shall not exceed the specified values, as shown in Fig. 2.2.11.1.4.3.

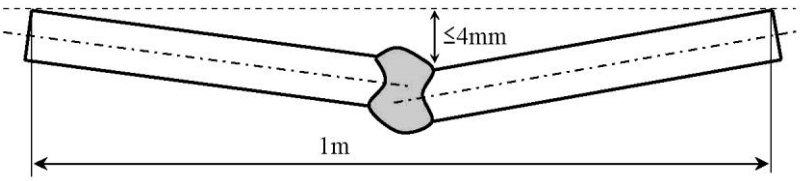

a)

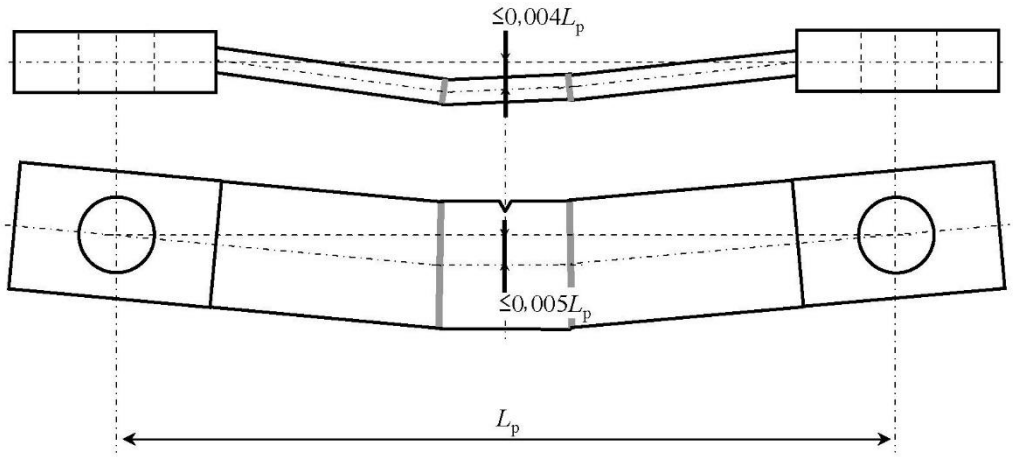

b)

Fig. 2.2.11.1.4.3 Accuracy (tolerances) of test specimen welds shape deviation:
(a) Flatness of weld between test specimen and tab plate

2.2.11.1.5 Test methods for conducting the arrest toughness test, K_{ca}.

2.2.11.1.5.1 Temperature control methods.

A predetermined temperature gradient shall be established across a test specimen width by soldering at least nine thermocouples to the test specimen for temperature measurement and control.

Temperature gradient shall be established in accordance with the following conditions:

.1 A temperature gradient of 0,25 — 0,35 ºC/mm shall be established in a test specimen width range of 0,3*W* — 0,7*W*. When measuring the temperatures at the centre position of the test specimen thickness, it shall be kept within deviation ±2 °C for 10 min or more, whereas when measuring the temperatures on the front and back surface positions of the test specimen, it shall be kept within deviation ±2 °C for (10+0,1*t* (mm)) minutes or more taking account of the time needed for soaking to the centre.

.2 At the test specimen width centre position (i.e., 0,5*W*), and in the range of ±100 mm in the test specimen length direction, the deviation from the temperature at the centre position in the length direction shall be controlled within ±5 °C. However, when temperature measurement is not performed at the centre position in the length direction, the average temperature at the closest position shall be used as the temperature at the centre position in the length direction.

.3 At the same position in the width direction, the deviation of the temperature on the front and back surfaces shall be controlled within ±5 °C.

2.2.11.1.5.2 Crack initiation methods.

Impact energy shall be applied to a test specimen to initiate a crack. The value of impact energy shall be calculated using Formula (2.2.11.1.5.2) and Fig. 2.2.11.1.5.2:

$$\frac{E_i}{t} \leq \min(1{,}2\sigma - 40, 200), \qquad (2.2.11.1.5.2)$$

where min means the minimum of the two values.

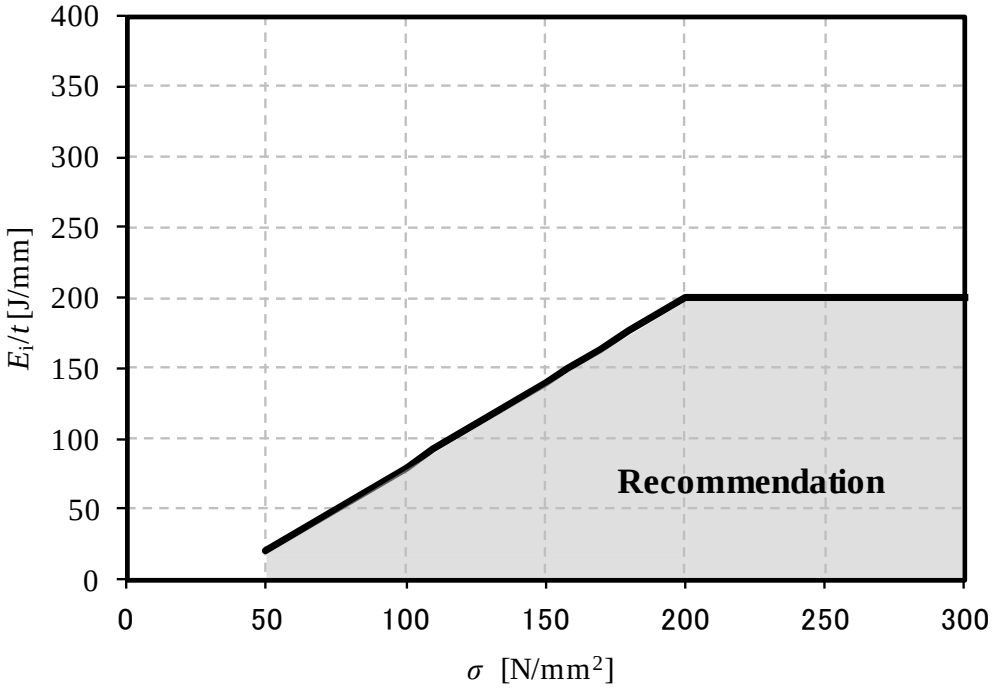

Fig. 2.2.11.1.5.2

However, if the energy is excessive, the results shall be treated as invalid data in accordance with the judgment criteria specified in 2.2.11.1.7.2.

2.2.11.1.6 Test procedures for testing brittle crack arrest toughness.

2.2.11.1.6.1 Pretest procedures.

.1 install an integrated specimen in the testing machine;

.2 mount a cooling device on the test specimen. A heating device may also be mounted in the case of stipulated heating on the test specimen;

.3 install an impact apparatus specified in 2.2.11.1.3.2, on the testing machine. Place an appropriate reaction force receiver (anvil) as necessary.

N o t e . The above procedures 1 — 3 shall be provided by the testing laboratory;

.4 after checking that all measured values of the thermocouples indicate room temperature, start cooling. The temperature distribution and the holding time shall be as in compliance with in 2.2.11.1.5.1;

.5 set an impact apparatus, as specified in 2.2.11.1.3.2 so that it can supply predetermined energy to the test specimen;

.6 apply static force to the test specimen until it reaches the predetermined value. This force shall be applied after temperature control to prevent autonomous crack initiation during force increase. The loading rate and applied stress shall satisfy the conditions described below, respectively:

.6.1 the loading rate shall ensure maintaining the set temperatures of the specimen. At that, the rate shall be limited to prevent over-shooting of the load and premature crack initiation;

.6.2 applied stress/yield stress ratio shall be within the range shown by equation $\sigma \leq \frac{2}{3}\sigma_{Y0}$. As

a guide, a value equal to 1/6 of σ_{Y0}. or more is desirable;

.7 to initiate a crack, the notch may be cooled further immediately before impact on the condition that the cooling does not disturb the temperature in the range of 0,3*W* — 0,7*W*. The test temperature in this case shall be the measured temperature obtained from the temperature record of a testing laboratory immediately before the further notch cooling;

.8 record the static force value measured by a force recorder.

2.2.11.1.6.2 Loading procedures:

.1 after holding a predetermined force for 30 s or more, apply an impact to the wedge using the impact apparatus. If a crack initiates autonomously and the exact force value at the time of the crack initiation cannot be obtained, the test is invalid;

.2 after the impact, record the force value measured by the force recorder;

.3 when the force after the impact is smaller than the test force, consider that crack initiation has occurred.

N o t e . An increase in the number of times of impact may cause a change in the shape of the notch of the test specimen. Since the number of impact has no effect on the value of brittle crack arrest toughness, no limit is specified for the number of impact. However, because the temperature gradient is often distorted by impact, the test shall be conducted again, beginning from temperature control when applying repeated impact to the wedge. In such a case, the requirements of 2.2.11.1.3.2 shall be complied with.

.4 when crack initiation, propagation, and arrest are observed, remove the force.

2.2.11.1.6.3 Procedures after testing:

.1 remove the impact apparatus providing access to the specimen;

.2 remove the cooling device, thermocouples, and strain gauges;

.3 return the temperature of the test specimen to room temperature. For that purpose, the test specimen may be heat-tinted using a gas burner or the like. If it is necessary to prevent heating of the fracture surface, this method shall be avoided;

.4 after gas-cutting an uncracked ligament, use the testing machine to cause ductile fracture, as necessary. Alternatively, it is also possible to gas-cut the uncracked ligament after using the testing machine to develop a ductile crack to a sufficient length.

2.2.11.1.6.4 Observation of fracture surfaces:

.1 photograph the fracture surfaces and propagation path;

.2 measure the longest length of the arrest crack tip in the plate thickness direction, and record the result as the arrest crack length. The arrest crack length shall include the notch length. In the case where a crack deviates from the direction vertical to the loading direction, the length projected to the plane vertical to the loading line is defined as the arrest crack length. In the following cases, however, judge the results according to the methods described for each case:

.2.1 crack re-initiation.

In the case where a brittle crack has re-initiated from an arrested crack, the original arrest position is defined as the arrest crack position. Here re-initiation is defined as the case where a crack and re-initiated cracks are completely separated by a stretched zone and brittle crack initiation from the stretched zone can be clearly observed. In the case where a crack continuously propagates partially in the thickness direction, the position of the longest brittle crack is defined as the arrest position;

.2.2 crack branching.

In the case where a crack deviates from the direction vertical to the loading direction, the length projected to the plane vertical to the loading line is defined as the arrest crack length. Similarly, in the case of crack branching, the length of the longest branch crack projected to the plane vertical to the loading line is defined as the branch crack length. More specifically, from the coordinates (x_a, y_a) of the arrest crack tip position and the coordinates (x_{br}, y_{br}) of the branch crack tip position shown in Fig. 2.2.11.1.6.4.2.2, obtain the angle θ from the *x*-axis and define x_a

as the arrest crack length, *a*. Here, *x* is the coordinate in the test specimen width direction, and the side face of the impact side is set as *x* = 0; *y* is the coordinate in the test specimen length direction, and the notch position is set as *y* = 0.

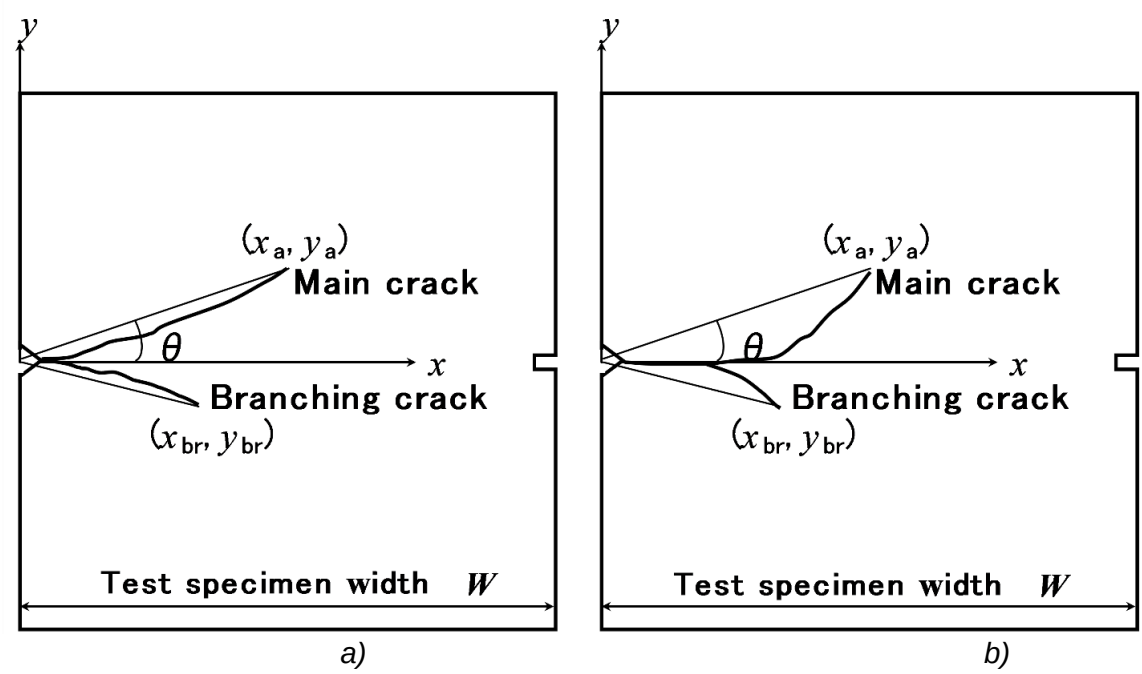

Fig. 2.2.11.1.6.4.2.2 Measurement methods of main crack and branch crack lengths:
a — Case of branching from notch; *b* — Case of branching during brittle crack propagation

.3 prepare a temperature distribution curve (line diagram showing the relation between the temperature and the distance from the test specimen top side) from the thermocouple measurement results, and obtain the arrest temperature *T* corresponding to the arrest crack length x_a.

2.2.11.1.7 Determination of arrest toughness.

2.2.11.1.7.1 Judgment of arrested crack.

When an arrested crack satisfies all of the conditions below (as shown in Fig. 2.2.11.1.7.1), the length of the arrested crack determined by 2.2.11.1.6.4 is valid. If any of the conditions is not met, the arrest toughness calculated from 2.2.11.1.7.3 is invalid.

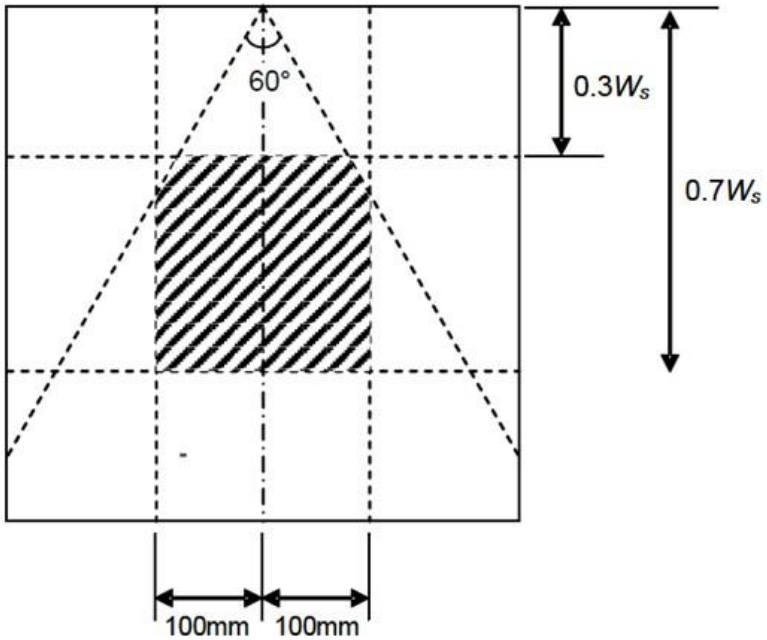

Fig. 2.2.11.1.7.1

2.2.11.1.7.1.1 Conditions for crack propagation path:

All of the crack path from crack initiation to arrest shall be within the range shown in Fig. 2.2.11.1.7.1.1. However, in the case where a main crack tip lies within this range but a part of the main crack passes outside the range, the arrest toughness may be assessed as valid if the temperature at the most deviated position of the main crack in the *y* direction is lower than that at *y* = 0, and also *K* for the main crack falls within ± 5 % of *K* for a straight crack of the same *a*. The calculation method of K_s for the main crack and a straight crack is obtained from formula

$$K = K_I \cos^3\left(\frac{\varphi}{2}\right) + 3K_{II}\cos^2\left(\frac{\varphi}{2}\right)\sin\left(\frac{\varphi}{2}\right). \qquad (2.2.11.1.7.1.1)$$

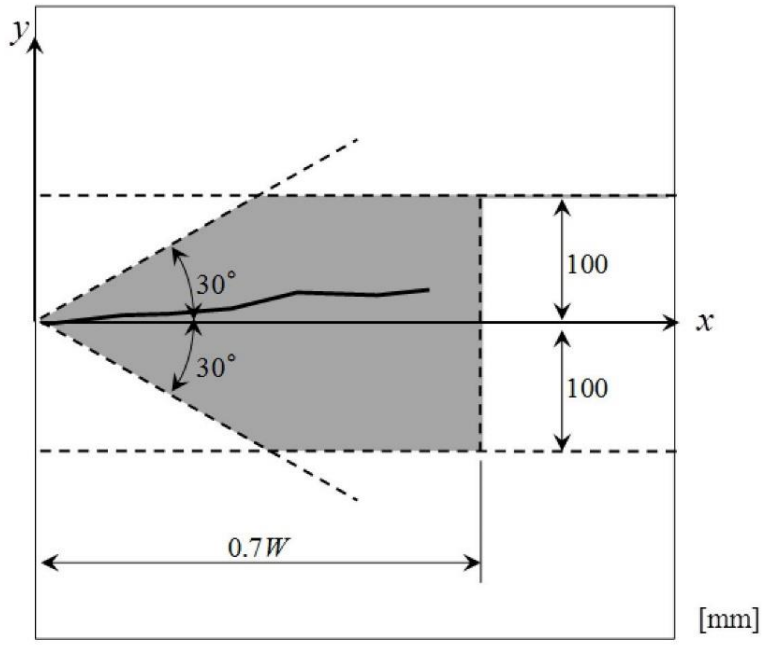

Fig. 2.2.11.1.7.1.1 Allowable range of main crack propagation path

2.2.11.1.7.1.2 Conditions for arrest crack length.

$$0{,}3 \leq \left(\frac{a}{W}\right) \leq 0{,}7; \qquad (2.2.11.1.7.1.2\text{-}1)$$

$$\left(\frac{a}{t}\right) \geq 1{,}5; \qquad (2.2.11.1.7.1.2\text{-}2)$$

$$\left(\frac{a}{L_p}\right) \leq 0{,}15. \qquad (2.2.11.1.7.1.2\text{-}3)$$

N o t e . Formula (2.2.11.1.7.1.2-3) ensures minimal influence of force drop at the centre of the specimen which might be caused by crack propagation and reflection of the stress wave at the two ends of the specimen. However, application of Formula (2.2.11.1.7.1.2-3) is not necessarily required if the strain and the crack length have been dynamically measured and the value of the strain at the time of arrest is 90 % or more of the static strain immediately before crack initiation.

2.2.11.1.7.1.3 Conditions for crack straightness.

$$|y_a| \leq 50 \text{ mm}. \qquad (2.2.11.1.7.1.3)$$

In the case where 50 mm < $|y_a|$ ≤ 100 mm and ≤ 30°, the result is valid only when the temperature at x = 0,5W and y = ±100 mm falls within ± 2,5 °C of that at x = 0,5W and y = 0.

2.2.11.1.7.1.4 Conditions for crack branching.

$$\left(\frac{x_{br}}{x_a}\right) \leq 0{,}6. \qquad (2.2.11.1.7.1.4)$$

2.2.11.1.7.2 Assessment of impact energy.

Impact energy shall satisfy Formula (2.2.11.1.7.2-1). If it does not satisfy the equation, the

value of arrest toughness calculated from the equations in 2.2.11.1.7.3 is invalid.

Conditions for impact energy:

$$\frac{E_i}{E_s+E_t} \leq \frac{5a-1050+1{,}4W}{0{,}7W-150} \qquad (2.2.11.1.7.2\text{-}1)$$

where $0{,}3 \leq \left(\frac{a}{W}\right) \leq 0{,}7$;

the variables have the following units: *a* (mm), and *W* (mm).

E_i is impact energy calculated from the formula

$$E_i = mgh; \qquad (2.2.11.1.7.2\text{-}2)$$

E_s is calculated from the formula

$$E_s = \frac{10^9 F^2}{2E}\frac{L}{Wt}; \qquad (2.2.11.1.7.2\text{-}3)$$

E_t is calculated from the formula

$$E_t = \frac{10^9 F^2}{E}\left(\frac{L_{tb}}{W_{tb}t_{tb}} + \frac{L_{pc}}{W_{pc}t_{pc}}\right). \qquad (2.2.11.1.7.2\text{-}4)$$

N o t e s : 1. If Formula (2.2.11.1.7.2-1) is not satisfied, the influence of impact energy on the stress intensity factor is too large to obtain an accurate arrest toughness

2. In the case where the tab plates are multistage as shown in Fig. 2.2.11.1.4.2-2, *b*, calculate and total the strain energy of each tab plate using equation.

3. In the case where tab plate widths are tapered (as shown in Fig. 2.2.11.1.4.2-2, *d*), calculate the strain energy based on elastostatics.

Where the variables have the following units: *E*s (J), *E*t (J), *F* (MN), *E* (N/mm2), *L* (mm), *W* (mm), and *t* (mm).

2.2.11.1.7.3 Calculation of arrest toughness.

The arrest toughness, K_{ca}, at the temperature, *T*, shall be calculated from Formula (2.2.11.1.7.3-1) using the arrest crack length, *a*, and the applied stress, σ, determined in 2.2.11.1.7.1. Calculate σ from Formula (2.2.11.1.7.3-2).

$$K_{ca} = \sigma\sqrt{\pi a}\left[\frac{2W}{\pi a}\tan\left(\frac{\pi a}{2W}\right)\right]^{1/2}; \qquad (2.2.11.1.7.3\text{-}1)$$

$$\sigma = \frac{10^6 F}{Wt} \qquad (2.2.11.1.7.3\text{-}2)$$

where the variables have the following units: *F* (MN), *W* (mm], and *t* (mm).

If the conditions specified in 2.2.11.1.7.1 and 2.2.11.1.7.2 are not satisfied, the K_{ca} calculated from Formula (2.2.11.1.7.3-1) is invalid.

2.2.11.1.8 Reporting documents.

The report shall be drawn up in accordance with the template (refer to Table 2.2.11.1.8). The following items shall be reported:

.1 test material: Steel type and yield stress at room temperature;

.2 testing machine: Capacity of the testing machine;

.3 test specimen dimensions: Thickness, width, length, angular distortion, and linear misalignment;

.4 integrated specimen dimensions: Tab plate thickness, tab plate width, integrated specimen length including the tab plates, and distance between the loading pins;

.5 test conditions: Applied force, applied stress, temperature gradient, impact energy, and the ratio of impact energy to the strain energy stored in the integrated specimen (sum of test specimen strain energy and tab plate strain energy);

.6 test results:

.6.1 judgment of arrest: crack length, presence or absence of crack branching, main crack angle, presence or absence of crack re-initiation, and arrest temperature;

.6.2 arrest toughness value;

.7 temperature distribution at moment of impact: thermocouple position, temperature value, and temperature distribution;

.8 test specimen photographs: crack propagation path (one side), and brittle crack fracture surface (both sides);

.9 dynamic measurement results: history of crack propagation velocity, and strain change at pin chucks (upon agreement with the Register).

Table 2.2.11.1.8

Report sheet for brittle crack arrest test results

Item	Details		Symbol	Conditions/ Results	Unit	Valid/ Invalid
1. Test material	Steel type		—		—	—
	Yield stress at room temperature		σ_{Y0}		N/mm^2	—
2. Test equipment	Testing machine capacity		—		MN	—
3. Test specimen dimensions	Thickness		t		mm	
	Width		W		mm	
	Length		L		mm	
	Angular distortion ＋linear misalignment		—		mm /m	
4. Integrated specimen dimensions	Tab plate thickness		t_{tb}		mm	
	Tab plate width		W_{tb}		mm	
	Test specimen length including a tab plate		$L + L_{tb}$		mm	
	Distance between loading pins		L_p		mm	
5. Test conditions	Applied force		F		MN	
	Applied stress		σ		N/ mm^2	
	Temperature gradient		—		°C /mm	
	Impact energy		E_i		J	
	Ratio of impact energy to strain energy stored in integrated specimen		$E_i/(E_s+E_i)$		—	
6. Test results	Judgment of crack propagation /arrest	Crack length	a		mm	
		Presence/absence of crack branching	—		—	—
		Ratio of branch crack length to main crack	X_{br}/X_a		—	
		Main crack angle	θ		Degree (°)	
		Presence/absence of crack re-initiation	—		—	
		Temperature at crack arrest position	T		°C	
	Arrest toughness value		K_{ca}		N/mm$^{3/2}$	
7. Temperature distribution at moment of impact	Temperature measurement position		—	Attached	—	—
	Temperature at each temperature measurement position		—	Attached	°C	—
	Temperature distribution curve		—	Attached	—	

Item	Details	Symbol	Conditions/ Results	Unit	Valid/ Invalid
8. Test specimen photographs	Crack propagation path	—	Attached	—	
	Brittle crack fracture surface (both sides)	—	Attached	—	
9. Dynamic measurement results	History of crack propagation velocity	—	Attached	—	
	Strain change at pin chucks	—	Attached	—	

2.2.11.2 Method for obtaining K_{ca} at a specific temperature and the evaluation.

2.2.11.2.1 General.

The present requirements apply to the method for conducting multiple tests specified in 2.2.11.1 to obtain K_{ca} value at a specific temperature T_d.

2.2.11.2.2 Method.

A number of experimental data show dependency of K_{ca} on arrest temperature, as expressed by Formula (2.2.11.2.2), where T_K (K) (= T (°C) + 273), c and K_0 are constants.

$$K_{ca} = K_0 exp\left(\frac{c}{T_K}\right) \qquad (2.2.11.2.2)$$

The arrest toughness at a required temperature T_D (K) can be obtained by following the procedures below:

.1 obtain at least four valid *Kca* data to comply with the Rules.

.2 approximating log K_{ca} by a linear expression of 1/*TK*, determine the coefficients log K_0 and c for the data described above by using the least square method

$$logK_{ca} = logK_0 + c\frac{1}{T_K}; \qquad (2.2.11.2.2.2)$$

.3 obtain the value of $(K_{ca} / K_0)\cdot\exp(c/T_K)$ for each data item. When the number of data outside the range of 0,85 through 1,15 is not exceeded, the least square method used in 2.2.11.2.2.2 is considered valid. Here is an integer obtained by rounding down the value of (number of all data divided by 6). If this condition is not met, conduct additional tests to add at least two data and apply the procedure in 2.2.11.2.2.2 to the data.

.4 the value of K_0 exp(c/*TD*) is defined as the estimated value of K_{ca} at T_d. The estimated value for the temperature corresponding to a specific value of K_{ca} can be obtained from $T_K = c/\log(K_{ca}/K_0)$. If the condition specified in 2.2.11.2.2.3 is not met, these estimated values are treated as reference values.

2.2.11.2.3 Evaluation.

The straight-line approximation of arrhenius plot for valid K_{ca} data by interpolation method are to comply with either the following 2.2.11.2.2.1 or 2.2.11.2.2.2:

2.2.11.2.3.1 The evaluation temperature of K_{ca} (i.e. –10 °C) is located between the upper and lower limits of the arrest temperature, with the K_{ca} corresponding to the evaluation temperature not lower than the required K_{ca} (e.g. 6,000 N/mm$^{3/2}$ or 8,000 N/mm $^{3/2}$), as shown in Fig. 2.2.11.2.3.1.

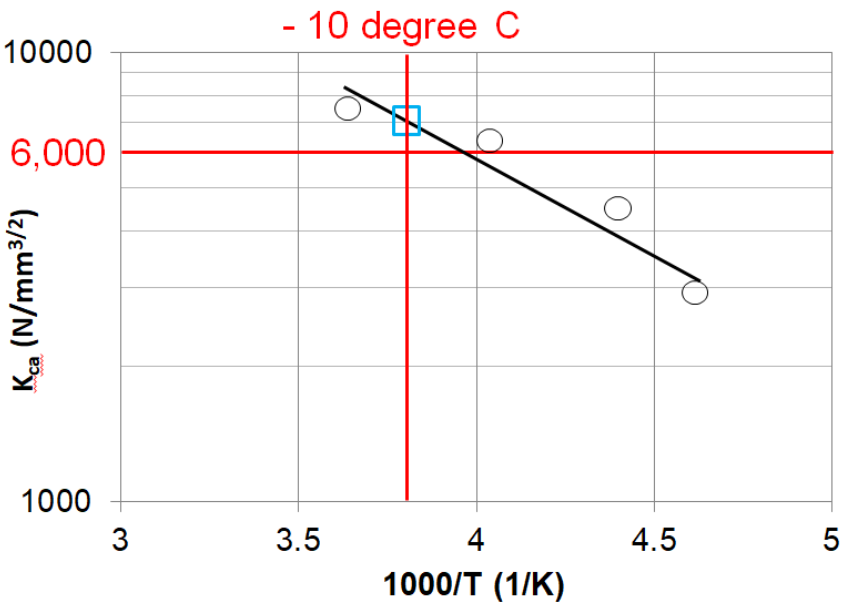

Fig. 2.2.11.2.3.1 Example for evaluation of K_{ca} at –10 °C

2.2.11.2.3.2 The temperature corresponding to the required K_{ca} (e.g. 6,000 N/mm$^{3/2}$ or 8,000 N/mm$^{3/2}$) is located between the upper and lower limits of the arrest temperature, with the temperature corresponding to the required K_{ca} not higher than the evaluation temperature (i.e. –10 ° C), as shown in Fig. 2.2.11.2.3.2.

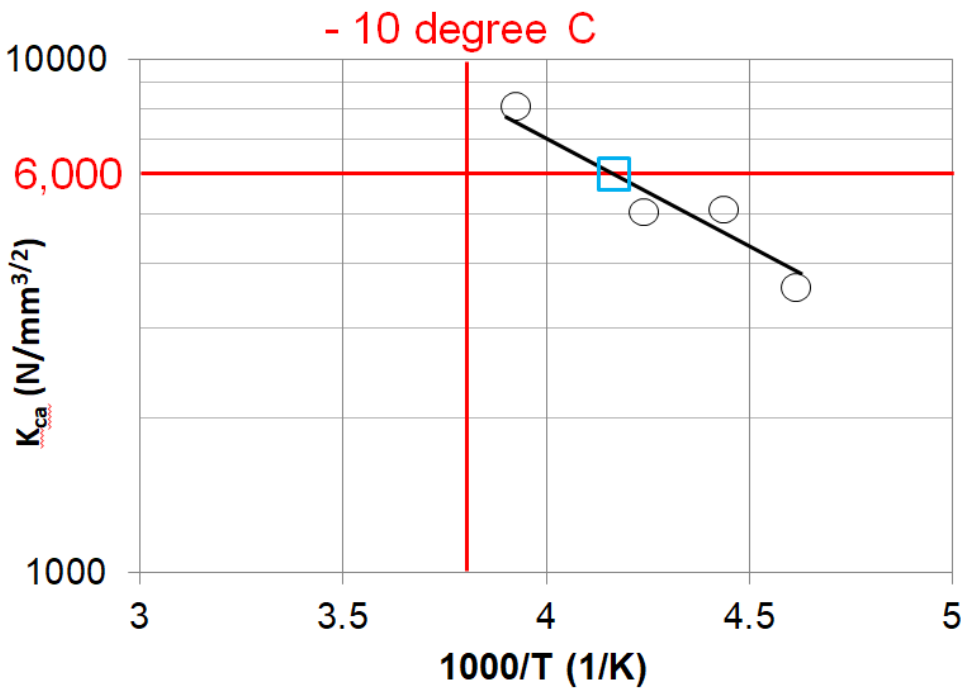

Fig. 2.2.11.2.3.2 Example for evaluation of temperature corresponding to the required K_{ca}

If requirements of 2.2.11.2.3 are not satisfied, conduct additional tests to satisfy this condition.

2.2.11.3 Double tension type arrest test.

2.2.11.3.1 Features of this test method.

A double tension type arrest test specimen consists of a main plate and a secondary loading tab. The main plate is a test plate for evaluating brittle crack arrest toughness. The secondary loading tab is a crack starter plate for assisting a brittle crack to run into the main plate. After applying a predetermined tension force and a temperature gradient to the main plate, a secondary force is applied to the secondary loading tab by a secondary loading device to cause a brittle crack to initiate and run into the main plate. The arrest toughness is evaluated from the arrest temperature and the crack length in the main plate.

The narrow connection part of the main plate and the secondary loading tab in this test suppress the flow of the tension stresses of the secondary loading tab into the main plate.

The values of arrest toughness obtained by this method can be considered the same as the results obtained by the brittle crack arrest toughness test specified in 2.2.11.1.

The specifications described in 2.2.11.1 shall be applied to conditions not mentioned in 2.2.11.3.

2.2.11.3.2 Test specimen shapes.

The recommended shapes of the entire double tension type arrest test specimen and the secondary loading tab are shown in Fig. 2.2.11.3.2. Provisions of 2.2.11.1.4.2 apply to the shapes of the tab plates and pin chucks.

N o t e . Because of the narrowness of the connection part, slight crack deviation may lead to failure of the crack to enter the main plate. The optimum shape design of the secondary loading tab depends on the type of steel and testing conditions.

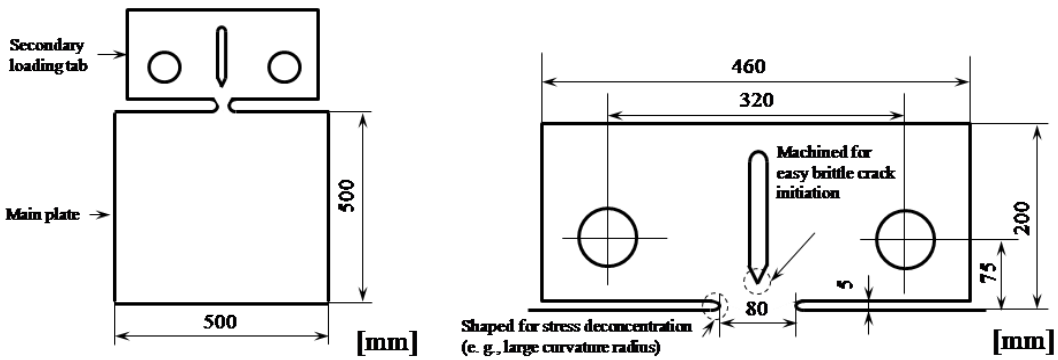

Fig. 2.2.11.3.2 Example of shape of secondary loading tab

2.2.11.3.3 Temperature conditions and temperature control methods.

The specifications for temperature gradients and methods for establishing the temperature gradient are described in 2.2.11.1.5. In addition, in the double tension type arrest test, the secondary loading tab must be cooled. The secondary loading tab is cooled without affecting the temperature gradient of the main plate. As in the cooling method for test specimens described in 2.2.11.1, cooling may be applied using a cooling box and a coolant. The temperature of the secondary loading tab can be measured using thermocouples as described in 2.2.11.1.

2.2.11.3.4 Secondary loading method.

A secondary loading device is used to apply force to the secondary loading tab. The secondary loading device shall satisfy the conditions below:

2.2.11.3.4.1 Holding methods of secondary loading device.

To avoid applying unnecessary force to the integrated specimen, the secondary loading

device shall be held in an appropriate way. Suspension type or floor type holding methods can be used. In the suspension type method, the secondary loading device is suspended and held by using a crane or a similar device. In the floor type method, the secondary loading device is lifted and held by using a frame or a similar device

2.2.11.3.4.2 Loading system.

A hydraulic type loading system is most suitable for applying a force to the secondary loading tab. Provisions of 2.2.11.1.4.2 apply to the shapes of the tab plates and pin chucks.

2.2.11.3.4.3 Loading method.

The method of loading the secondary loading tab shall be a pin type loading method. A loading method other than a pin type may be used by agreement with the Register. The loading rate is not specified.

2.2.11.4 Requirements for undertaking isothermal Crack Arrest Temperature (CAT) test.

2.2.11.4.1 Scope of application.

2.2.11.4.1.1 Provisions of 2.2.11.4 shall be applied according to the scope defined in 3.19.

2.2.11.4.1.2 Provisions of 2.2.11.4 specify the requirements for test procedures and test conditions when using the isothermal crack arrest test to determine a valid test result under isothermal conditions and in order to establish the crack arrest temperature (*CAT*). The requirements of 2.2.11.4 are applicable to steels with thickness over 50 mm and not greater than 100 mm.

2.2.11.4.1.3 This method uses an isothermal temperature in the test specimen being evaluated. Unless otherwise specified in 2.2.11.4, the other test parameters shall be in accordance with 2.2.11.1.

2.2.11.4.1.4 Table 3.19.2.2.2 gives the relevant requirements for the brittle crack arrest property described by the crack arrest temperature (*CAT*).

2.2.11.4.1.5 The manufacturer shall submit the test procedure to the Register for review prior to testing.

2.2.11.4.2 Symbols and their significance.

2.2.11.4.2.1 Requirements of Table 2.2.11.4.2.1 supplement those of Table 2.2.11.1.2 with specific symbols for the isothermal test.

Table 2.2.11.4.2.1

Nomenclature supplementary to Table 2.2.11.1.2

Symbol	Unit	Significance
t	mm	Test specimen thickness
L	mm	Test specimen length
W	mm	Test specimen width
a_{MN}	mm	Machined notch length on specimen edge
L_{SG}	mm	Side groove length on side surface from the specimen edge. L_{SG} is defined as a groove length with constant depth except a curved section in depth at side groove end
d_{SG}	mm	Side groove depth in section with constant depth
L_{EB}-min	mm	Minimum length between specimen edge and electron beam re-melting zone front
$L_{EB-s1,\ -s2}$	mm	Length between specimen edge and electron beam re-melting zone front appeared on both specimen side surfaces
L_{LTG}	mm	Local temperature gradient zone length for brittle crack runway
a_{arrest}	mm	Arrested crack length
T_{target}	°C	Target test temperature

Symbol	Unit	Significance
T_{test}	°C	Defined test temperature
T_{arrest}	°C	Target test temperature at which valid brittle crack arrest behavior is observed
σ	N/mm2	Applied test stress at cross section of $W \times t$
SMYS	N/mm2	Specified minimum yield strength of the tested steel grade to be approved
CAT	°C	Crack arrest temperature, the lowest temperature, T_{arrest}, at which running brittle crack is arrested

2.2.11.4.3 Testing equipment.

2.2.11.4.3.1 The test equipment to be used shall be of the hydraulic type of sufficient capacity to provide a tensile load equivalent to 2/3 of *SMYS* of the steel grade to be approved.

2.2.11.4.3.2 The temperature control system shall be equipped to maintain the temperature in the specified region of the specimen within ±2 °C from T_{target}.

2.2.11.4.3.3 Methods for initiating the brittle crack may be of drop weight type, air gun type or double tension tab plate type.

2.2.11.4.3.4 The detailed requirements for testing equipment are specified in 2.2.11.1.3.

2.2.11.4.4 Test specimens.

2.2.11.4.4.1 Impact type crack initiation

2.2.11.4.4.1.1 Test specimens shall be in accordance with 2.2.11.1.4, unless otherwise specified.

2.2.11.4.4.1.2 Specimen dimensions are shown in Fig. 2.2.11.4.4.1.2. The test specimen width, *W,* shall be 50 mm. The test specimen length, *L*, shall be equal to or greater than 500 mm.

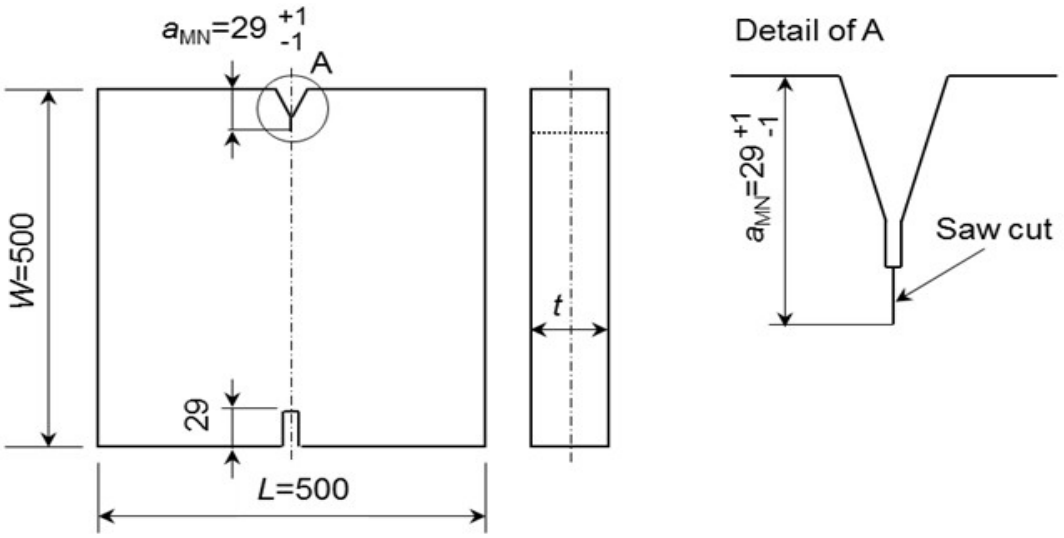

Fig. 2.2.11.4.4.1.2 Test specimen dimensions for an impact type specimen

N o t e . Saw cut notch radius may be machined in the range 0,1mm *R* and 1 mm *R* in order to control a brittle crack initiation at test.

2.2.11.4.4.1.3 V-shape notch for brittle crack initiation is machined on the specimen edge of the impact side. The whole machined notch length shall be equal to 29mm with a tolerance range of ± 1mm.

2.2.11.4.4.1.4 Requirements for side grooves are described in 2.2.11.4.4.4.

2.2.11.4.4.2 Double tension type crack initiation

2.2.11.4.4.2.1 Reference shall be made to 2.2.11.3 for the shape and sizes in secondary loading tab and secondary loading method for brittle crack initiation.

2.2.11.4.4.2.2 In a double tension type test, the secondary loading tab plate may be subject to further cooling to enhance an easy brittle crack initiation.

2.2.11.4.4.3 Embrittled zone setting

2.2.11.4.4.3.1 An embrittled zone shall be applied to ensure the initiation of a running brittle crack. Either Electron Beam Welding (EBW) or Local Temperature Gradient (LTG) may be adopted to facilitate the embrittled zone

2.2.11.4.4.3.2 In EBW embrittlement, electron beam welding is applied along the expected initial crack propagation path, which is the center line of the specimen in front of the machined V-notch.

2.2.11.4.4.3.3 The complete penetration through the specimen thickness is required along the embrittled zone. One side EBW penetration is preferable, but dual sides EB penetration may be also adopted when the EBW power is not enough to achieve the complete penetration by one side EBW.

2.2.11.4.4.3.4 The EBW embrittlement is recommended to be prepared before specimen contour machining.

2.2.11.4.4.3.5 In EBW embrittlement, zone shall be of an appropriate quality.

N o t e . EBW occasionally behaves in an un-stable manner at start and end points. EBW line is recommended to start from the embrittled zone tip side to the specimen edge with an increasing power control or go/return manner at start point to keep the stable EBW.

2.2.11.4.4.3.6 In LTG system, the specified local temperature gradient between machined notch tip and isothermal test region is regulated after isothermal temperature control. LTG temperature control is to be achieved just before brittle crack initiation, nevertheless the steady temperature gradient through the thickness shall be ensured.

2.2.11.4.4.4 Side grooves.

2.2.11.4.4.4.1 Side grooves on side surface can be machined along the embrittled zone to keep brittle crack propagation straight. Side grooves shall be machined in the specified cases as specified in this section.

2.2.11.4.4.4.2 In EBW embrittlement, side grooves are not necessarily mandatory. Use of EBW avoids the shear lips. However, when shear lips are evident on the fractured specimen, e.g. shear lips over 1 mm in thickness in either side then side grooves should be machined to suppress the shear lips.

2.2.11.4.4.4.3 In LTG embrittlement, side grooves are mandatory. Side grooves with the same shape and size shall be machined on both side surfaces.

2.2.11.4.4.4.4 The length of side groove, *LSG* shall be no shorter than the sum of the required embrittled zone length of 150 mm.

2.2.11.4.4.4.5 When side grooves would be introduced, the side groove depth, the tip radius and the open angle are not regulated, but are adequately selected in order to avoid any shear lips over 1 mm thickness in either side. An example of side groove dimensions is shown in Fig. 2.2.11.4.4.4.5.

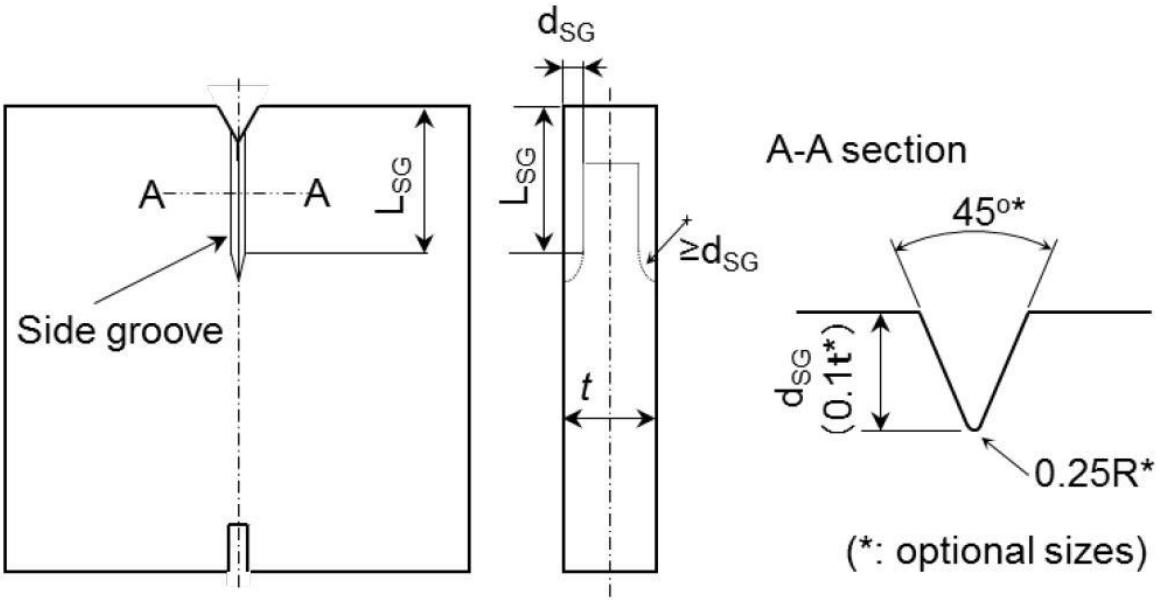

Fig. 2.2.11.4.4.4.5 Side groove configuration and dimensions

2.2.11.4.4.4.6 Side groove end shall be machined to make a groove depth gradually shallow with a curvature larger than or equal to groove depth, d_{SG}. Side groove length, L_{sg} is defined as a groove length with constant depth except a curved section in depth at side groove end

2.2.11.4.4.5 Nominal length of embrittled zone.

2.2.11.4.4.5.1 The length of embrittled zone shall be nominally equal to 150 mm in both systems of EBW and LTG.

2.2.11.4.4.5.2 EBW zone length is regulated by three measurements on the fracture surface after test (as shown in Fig. 2.2.11.4.4.5.2), L_{EB}-min between specimen edge and EBW front line, EBW, L_{EB-s1} and L_{EB-s2}.

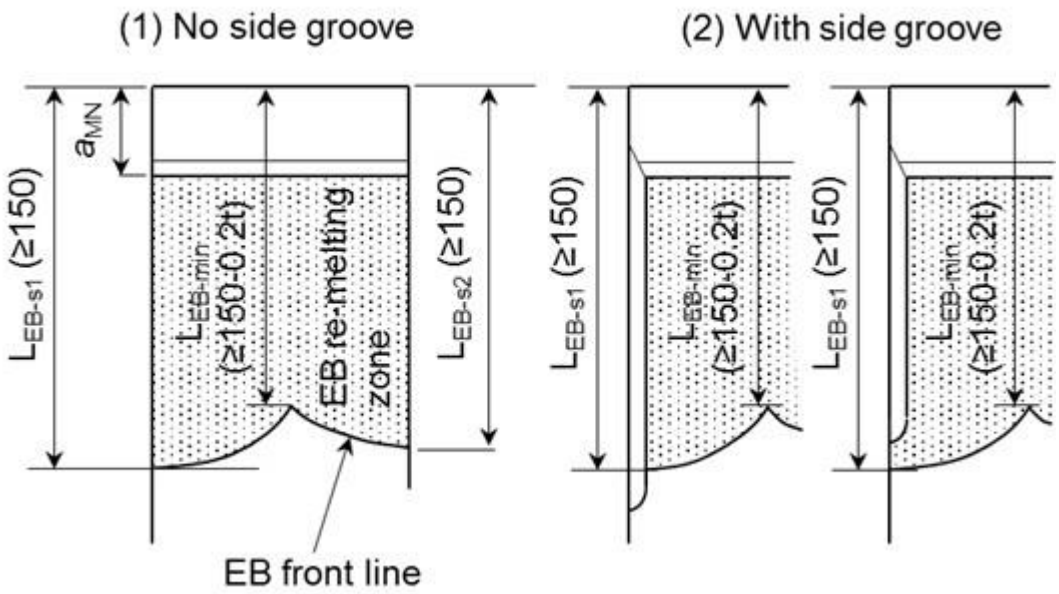

Fig. 2.2.11.4.4.5.2 Definition of EBW length

2.2.11.4.4.5.3 The minimum length between specimen edge and EBW front line, L_{EB}-min should be no smaller than 150 mm. However, it may be acceptable even if L_{EB}-min is no smaller than 150 mm – 0,2*t*, where *t* is specimen thickness. When L_{EB}-min is smaller than 150 mm, a temperature safety margin shall be considered into T_{test} (refer to 2.2.11.4.8.1.2).

2.2.11.4.4.5.4 The other two are the lengths between specimen edge and EBW front appeared on both side surfaces, as denoted with L_{EB-s1} and L_{EB-s2}. Both of L_{EB-s1} *and* L_{EB-s2} shall be no smaller than 150 mm.

2.2.11.4.4.5.5 In LTG system, LLTG shall be set as 150 mm and over.

2.2.11.4.4.6 Tab plate / pin chuck details and welding of test specimen to tab plates.

2.2.11.4.4.6.1 The configuration and size of tab plates and pin chucks shall comply with those specified in 2.2.11.1.4.2. The welding distortion in the integrated specimen, which is welded with specimen, tab plates and pin chucks, shall be also within the requirements of 2.2.11.1.4.3.

2.2.11.4.5 Test method.

2.2.11.4.5.1 Preloading.

2.2.11.4.5.1.1 Preloading at room temperature may be applied to avoid unexpected brittle crack initiation at test. The applied load value shall be no greater than the test stress. Preloading can be applied at higher temperature than ambient temperature when brittle crack initiation is expected at preloading process. The specimen shall not be subjected to temperature higher than 100 °C.

2.2.11.4.5.2 Temperature measurement and control.

2.2.11.4.5.2.1 Temperature control plan showing the number and position of thermocouples shall be in accordance with 2.2.11.4.5.2.

2.2.11.4.5.2.2 Thermocouples shall be attached to both sides of the test specimen at a maximum interval of 50 mm in the whole width and in the longitudinal direction at the test specimen center position (0,5*W*) within the range of ± 100 mm from the centerline in the longitudinal direction (refer to Fig. 2.2.11.4.5.2.2).

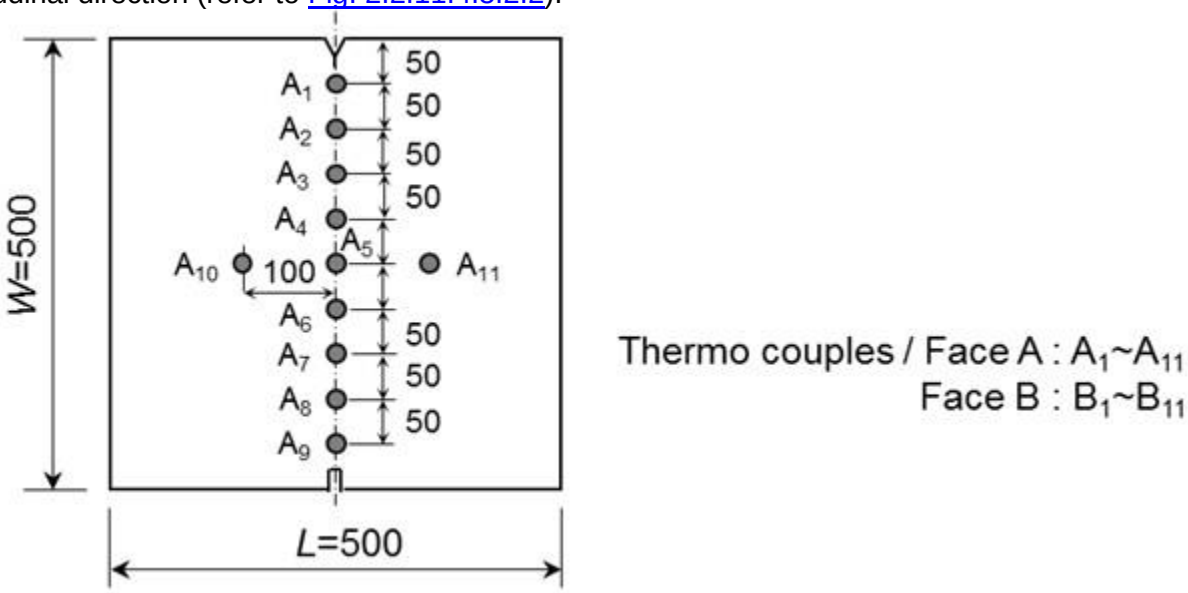

Fig. 2.2.11.4.5.2.2 Locations of temperature measurement

2.2.11.4.5.2.3 EBW embrittlement.

2.2.11.4.5.2.3.1 The temperatures of the thermocouples across the range of 0,3*W* ~ 0,7*W* in both width and longitudinal directions shall be controlled within ± 2 °C of the target test temperature, T_{target}.

2.2.11.4.5.2.3.2 When all measured temperatures across the range of 0,3*W* ~ 0,7*W* have reached T_{target}, steady temperature control shall be kept at least for 10 + 0,1*t* (mm) minutes to ensure a uniform temperature distribution into mid-thickness prior to applying test load.

2.2.11.4.5.2.3.3 The machined notch tip may be locally cooled to easily initiate brittle crack. Nevertheless, the local cooling shall not disturb the steady temperature control across the range of 0,3*W* ~ 0,7*W*.

2.2.11.4.5.2.4 For LTG embrittlement.

2.2.11.4.5.2.4.1 In LTG system, in addition to the temperature measurements shown in Fig. 2.2.11.4.5.2.2, the additional temperature measurement at the machine notch tip, A_0 and B_0 is required. Thermocouples positions within LTG zone are shown in Fig. 2.2.11.4.5.2.4.1.

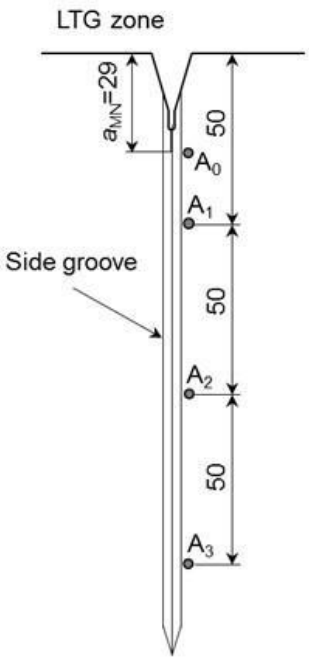

Fig. 2.2.11.4.5.2.4.1 Detail of LTG zone and additional thermocouple A_0

2.2.11.4.5.2.4.2 The temperatures of the thermocouples across the range of 0,3*W* ~ 0,7*W* in both width and longitudinal directions shall be controlled within ± 2°C of the target test temperature, T_{target}. However, the temperature measurement at 0,3*W* (location of A_3 and B_3) shall be in accordance with 2.2.11.4.5.2.4.6.

2.2.11.4.5.2.4.3 Once the all measured temperatures across the range of 0,3W ~ 0,7W have reached T_{target}, steady temperature control shall be kept at least for 10 + 0,1*t* min to ensure a uniform temperature distribution into mid-thickness, then the test load is applied.

2.2.11.4.5.2.4.4 LTG is controlled by local cooling around the machined notch tip. LTG profile shall be recorded by the temperature measurements from A_0 to A_3 shown in Fig. 2.2.11.4.5.2.4.4.

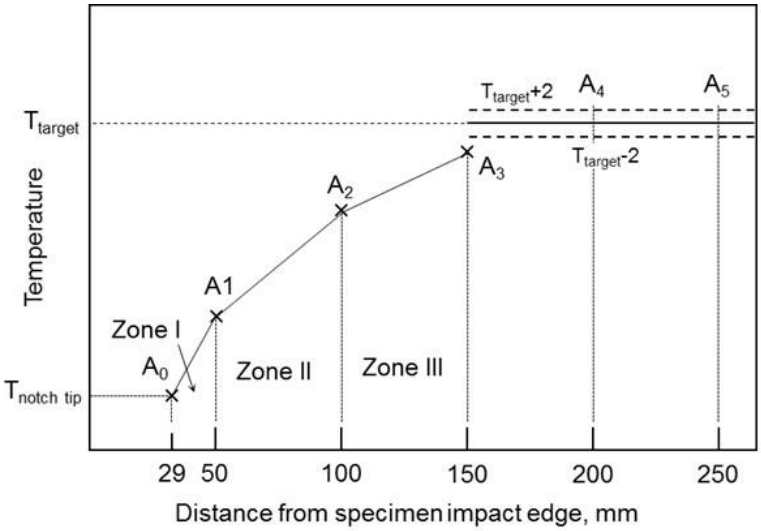

Fig. 2.2.11.4.5.2.4.4 Schematic profile of the temperature gradient in the LTG zone

2.2.11.4.5.2.4.5 LTG zone is established by temperature gradients in three zones: Zone I, Zone II and Zone III. The acceptable range for each temperature gradient is listed in Table 2.2.11.4.5.2.4.5.

Table 2.2.11.4.5.2.4.5

Acceptable LTG range

Zone	Location from edge	Acceptable range of temperature gradient
Zone I	29 mm — 50 mm	2,00 °C/mm — 2,30 °C/mm
Zone II	50 mm — 100 mm	0,25 °C/mm — 0,60 °C/mm
Zone III[1]	100 mm —150 mm	0,10 °C/mm — 0,20 °C/mm
[1] The Zone III arrangement is mandatory.		

2.2.11.4.5.2.4.6 Two temperature measurements at A_2;B_2 and A_3;B_3 shall satisfy the following requirements:

T at A_3, T at $B_3 < T_{target} - 2$ °C;

T at $A_2 < T$ at $A_3 - 5$ °C;

T at $B_2 < T$ at $B_3 - 5$ °C.

2.2.11.4.5.2.4.7 No requirements for T at A_0 and T at A_1 temperatures when T at A_3 and T at A_2 satisfy the requirements above. Face B is the same.

2.2.11.4.5.2.4.8 The temperatures from A_0;B_0 to A_3;B_3 shall be decided at test planning stage. Table 2.2.11.4.5.2.4.5 gives the recommended temperature gradients in three zones: Zone I, Zone II and Zone III in LTG zone.

2.2.11.4.5.2.4.9 The temperature profile in LTG zone mentioned above shall be ensured after holding time at least for 10 + 0,1t min to ensure a uniform temperature distribution into mid-thickness before brittle crack initiation.

2.2.11.4.5.2.4.10 The acceptance of LTG in the test shall be decided from Table 2.2.11.4.5.2.4.5 based on the measured temperatures from A_0 to A_3.

2.2.11.4.5.2.5 Double tension type crack initiation specimen.

2.2.11.4.5.2.5.1 Temperature control and holding time at steady state shall be the same as specified in 2.2.11.4.5.2.3 or in 2.2.11.4.5.2.4 according to the method specified.

2.2.11.4.5.3 Loading and brittle crack initiation

2.2.11.4.5.3.1 Prior to testing, a target test temperature (T_{target}) shall be selected.

2.2.11.4.5.3.2 Test procedures shall be in accordance with 2.2.11.1.6 except that the applied stress shall be 2/3 of SMYS of the steel grade.

2.2.11.4.5.3.3 The test load shall be held at the test target load or higher for a minimum of 30 s prior to crack initiation.

2.2.11.4.5.3.4 Brittle crack may be initiated by impact or secondary tab plate tension after all of the temperature measurements and the applied force are recorded.

2.2.11.4.6 Measurements after test and test validation judgment.

2.2.11.4.6.1 Brittle crack initiation and validation.

2.2.11.4.6.1.1 If brittle crack spontaneously initiates before the test force is achieved or the specified hold time at the test force is not achieved, the test shall be invalid.

2.2.11.4.6.1.2 If brittle crack spontaneously initiates without impact or secondary tab tension but after the specified time at the test force is achieved, the test is considered as a valid initiation. The following validation judgments of crack path and fracture appearance shall be examined.

2.2.11.4.6.2 Crack path examination and validation

2.2.11.4.6.2.1 When brittle crack path in embrittled zone deviates from EBW line or side groove in LTG system due to crack deflection and/or crack branching, the test shall be considered as invalid.

2.2.11.4.6.2.2 All of the crack path from embrittled zone end shall be within the range shown in Fig. 2.2.11.4.6.2.2. If not, the test shall be considered as invalid.

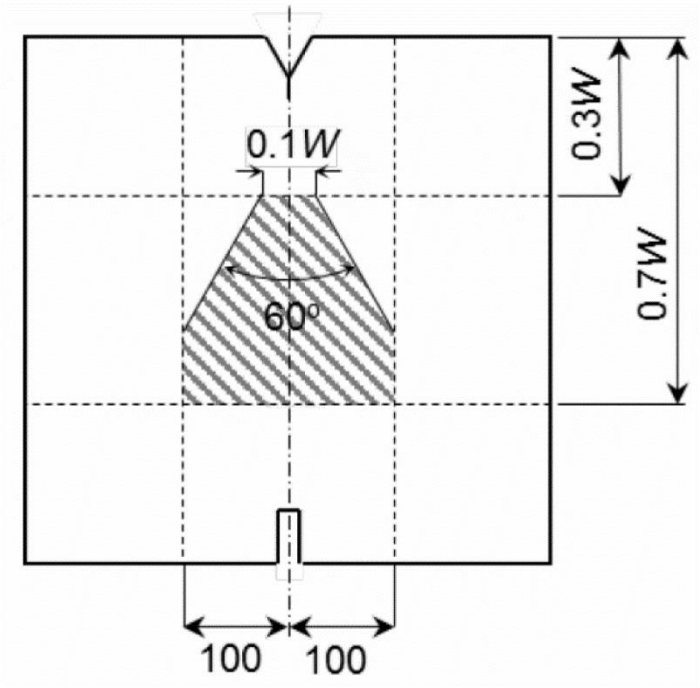

Fig. 2.2.11.4.6.2.2 Allowable range of main crack propagation path

2.2.11.4.6.3 Fracture surface examination, crack length measurement and their validation.

2.2.11.4.6.3.1 Fracture surface shall be observed and examined. The crack "initiation" and "propagation" shall be checked for validity and judgments recorded. The crack “arrest” positions are to be measured and recorded.

2.2.11.4.6.3.2 When crack initiation trigger point is clearly detected at side groove root, other than the V-notch tip, the test shall be invalid.

2.2.11.4.6.3.3 In EBW embrittlement setting, EBW zone length is quantified by three measurements of $L_{EB\text{-}s1}$, $L_{EB\text{-}s2}$ and L_{EB}-min, which are defined in 2.2.11.4.4.5. When either or both of $L_{EB\text{-}s1}$, $L_{EB\text{-}s2}$ are smaller than 150 mm, the test shall be invalid. When L_{EB}-min is smaller than 150 mm – 0,2*t*, the test shall be invalid.

2.2.11.4.6.3.4 When the shear lip with thickness over 1 mm in either side near side surfaces of embrittled zone are visibly observed independent of the specimens with or without side grooves, the test shall be invalid.

2.2.11.4.6.3.5 In EBW embrittlement setting, the penetration of brittle crack beyond the EBW front line shall be visually examined. When any brittle fracture appearance area continued from the EB front line is not detected, the test shall be invalid.

2.2.11.4.6.3.6 The weld defects in EBW embrittled zone shall be visually examined. If detected, it shall be quantified. A projecting length of defect on the thickness line through EB weld region along brittle crack path shall be measured, and the total occupation ratio of the projected defect part to the total thickness is defined as defect line fraction (refer to Fig. 2.2.11.4.6.3.6). When the defects line fraction is larger than 10%, the test shall be invalid.

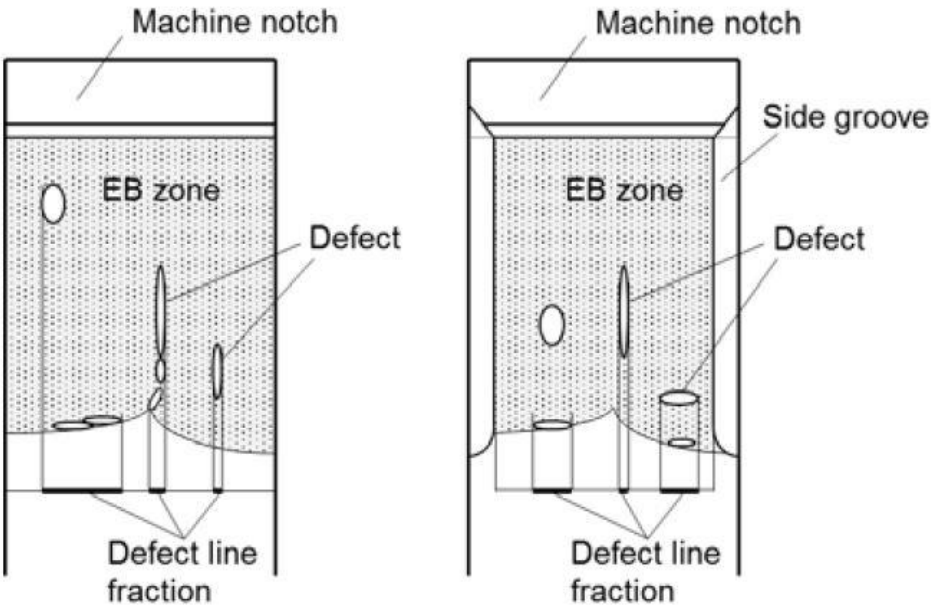

Fig. 2.2.11.4.6.3.6 Counting procedure of defect line fraction

2.2.11.4.6.3.7 In EBW embrittlement by dual sides' penetration, a gap on embrittled zone fracture surface, which is induced by miss meeting of dual fusion lines, is visibly detected at an overlapped line of dual side penetration, the test shall be invalid.

2.2.11.4.7 Judgment of "arrest" or "propagate".

2.2.11.4.7.1 The final test judgment of "arrest", "propagate" or "invalid" is determined by the requirements of 2.2.11.4.7.

2.2.11.4.7.2 If initiated brittle crack is arrested and the tested specimen is not broken into two pieces, the fracture surfaces should be exposed with the procedures specified in 2.2.11.1.6.3 and 2.2.11.1.6.4.

2.2.11.4.7.3 When the specimen was not broken into two pieces during testing, the arrested crack length, a_{arrest} shall be measured on the fractured surfaces. The length from the specimen edge of impact side to the arrested crack tip (the longest position) is defined as a_{arrest}.

2.2.11.4.7.4 For LTG and EBW, a_{arrest} shall be greater than L_{LTG} and $L_{EB\text{-}s1}$, $L_{EB\text{-}s2}$ or L_{EB}-min. If not, the test shall be considered as invalid.

2.2.11.4.7.5 Even when the specimen was broken into two pieces during testing, it can be considered as "arrest" when brittle crack re-initiation is clearly evident. Even in the fracture surface all occupied by brittle fracture, when a part of brittle crack surface from embrittled zone is continuously surrounded by thin ductile tear line, the test can be judged as re-initiation behavior. If so, the maximum crack length of the part surrounded tear line can be measured as a_{arrest}. If re-initiation is not visibly evident, the test is judged as "propagate".

2.2.11.4.7.6 The test is judged as "a_{arrest}" when the value of a_{arrest} is no greater than 0,7*W*. If not, the test is judged as "propagate".

2.2.11.4.8 T_{test}, T_{arrest} and *CAT* determination

2.2.11.4.8.1 T_{test} determination.

2.2.11.4.8.1.1 It shall be ensured on the thermocouple measured record that all temperature measurements across the range of 0,3*W* ~ 0,7*W* in both width and longitudinal direction are in the range of T_{target} ±2 °C at brittle crack initiation. If not, the test shall be invalid. However, the temperature measurement at 0,3*W* (location of A_3 and B_3) in LTG system shall be exempted from this requirement.

2.2.11.4.8.1.2 If L_{EB}-min in EBW embrittlement is no smaller than 150 mm, T_{test} can be defined to equal with T_{target}. If not, T_{test} shall be equaled with T_{target} + 5 °C.

2.2.11.4.8.1.3 In LTG embrittlement, T_{test} can be equated with T_{target}.

2.2.11.4.8.1.4 The final arrest judgment at T_{test} is concluded by at least two tests at the same test condition which are judged as "arrest".

2.2.11.4.8.2 T_{arrest} determination.

2.2.11.4.8.2.1 When at least repeated two "arrest" tests appear at the same T_{target}, brittle crack arrest behaviour at T_{target} will be decided ($T_{arrest} = T_{target}$). When a "propagate" test result is included in the multiple test results at the same T_{target}, the T_{target} cannot to be decided as T_{arrest}.

2.2.11.4.8.3 *CAT* determination.

2.2.11.4.8.3.1 When CAT is determined, one "propagate" test is needed in addition to two "arrest" tests. The target test temperature, T_{target} for "propagate" test is recommended to select 5 °C lower than T_{arrest}. The minimum temperature of T_{arrest} is determined as *CAT*.

2.2.11.4.8.3.2 With only the "arrest" tests, without "propagation" test, it is decided only that *CAT* is lower than T_{test} in the two "arrest" tests, i.e. not deterministic CAT.

2.2.11.4.9 Reporting.

The following items shall be reported:

.1 test material: grade and thickness;

.2 test machine capacity;

.3 test specimen dimensions: thickness *t*; width *W* and length *L*; notch details and length a_{MN}, side groove details if machined;

.4 embrittled zone type: EBW or LTG embrittlement;

.5 integrated specimen dimensions: Tab plate thickness, tab plate width, integrated specimen unit length including the tab plates, and distance between the loading pins, angular distortion and linear misalignment;

.6 brittle crack trigger information: impact type or double tension. If impact type, drop weight type or air gun type, and applied impact energy;

.7 test conditions; Applied load; preload stress, test stress;

judgments for preload stress limit, hold time requirement under steady test stress;

.8 test temperature: complete temperature records with thermocouple positions for measured temperatures (figure and/or table) and target test temperature;

judgments for temperature scatter limit in isothermal region;

judgment for local temperature gradient requirements and holding time requirement after steady local temperature gradient before brittle crack trigger, if LTG system is used;

.9 crack path and fracture surface: tested specimen photos showing fracture surfaces on both sides and crack path side view; Mark at "embrittled zone tip" and "arrest" positions;

judgment for crack path requirement;

judgment for cleavage trigger location (whether side groove edge or V-notch edge);

.10 embrittled zone information.

When EBW is used: $L_{EB\text{-}s1}$, $L_{EB\text{-}s2}$ and L_{EB}-min:

judgment for shear lip thickness requirement;

judgment whether brittle fracture appearance area continues from the EBW front line;

judgment for EBW defects requirement;

judgment for EBW lengths, $L_{EB\text{-}s1}$, $L_{EB\text{-}s2}$ and L_{EB}-min requirements.

When LTG is used: LLTG.

Judgment for shear lip thickness requirement;

test results:

when the specimen did not break into two pieces after brittle crack trigger, arrested crack length a_{arrest};

when the specimen broke into two pieces after brittle crack trigger,

If there is brittle crack re-initiation, arrested crack length a_{arrest}:

judgement for a_{arrest} in the valid range ($0{,}3W < a_{arrest} \leq 0{,}7W$);

final judgement either "arrest", "propagate" or "invalid";

.1 dynamic measurement results: history of crack propagation velocity, and strain change at pin chucks, if needed.

2.2.11.4.10 Use of test for material qualification testing.

Where required, the method can also be used for determining the lowest temperature at which a steel can arrest a running brittle crack (the determined *CAT*) as the material property characteristic in accordance with 2.2.11.4.8.3.

2.3 PROCEDURES OF TESTING NON-METALLIC MATERIALS

2.3.1 Testing conditions.

2.3.1.1 Before testing test specimens shall be conditioned at an ambient air temperature (23±2) °C and relative humidity (50±5) %. Unless expressly provided otherwise, the duration of conditioning shall be at least 16 h.

Testing shall be carried out immediately after completion of conditioning of the test specimens.

The conditioning may be omitted if it is proved to the Register that testing conditions do not significantly affect the test results and their stability.

2.3.1.2 The test specimens of reinforced materials are cut in the warp or weft direction so that the axis of the test specimen shall be parallel to the fibres of warp or weft, respectively.

2.3.1.3 In case of the tests carried out according to the method approved by the Register test, specimens may be used, whose shape and dimensions differ from those required by this Chapter.

2.3.1.4 Testing conditions other than those specified in this Chapter shall comply with the relevant standards.

2.3.2 Tensile tests.

2.3.2.1 Tensile strength of glass-reinforced plastics shall be determined on the test specimens according to Figs. 2.3.2.1-1 and 2.3.2.1-2, and Table 2.3.2.1.

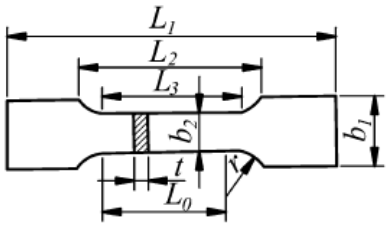

Fig. 2.3.2.1-1

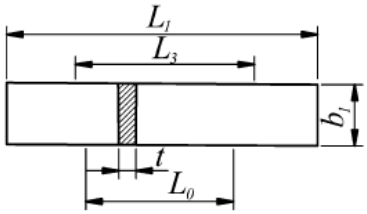

Fig. 2.3.2.1-2

Table 2.3.2.1

Dimensions, mm	Figs. 2.3.2.1-1	Fig. 2.3.2.1-2
L_{1min}	150	250
L_2	115±5	170±5
L_3	60±0,5	–
L_0	50±0,5	50±1
b_1	20±0,5	25±0,5
b_2	10±0,5	–
t	1...10	1...6
r	60	–

2.3.2.2 The tensile strength and fracture elongation of laminated textiles are determined on test specimens (50±1) mm wide having the original length between the grips of testing machine (200±5) mm.

The pre-load applied is 2 N for cloths with a density 200 g/m^3 or less, 5 N for cloths with a density more than 200 and up to 500 g/m^3 and 10 N for cloths with a density above 500 g/m^3.

The moving rate of the testing machine grips is 100±20 mm/min.

Fracture elongation shall be in accordance with 2.2.2.1.4.

2.3.2.3 The tear propagation strength of laminated textiles is determined on rectangular test specimens measuring (225±5) × (75±5) mm. An incision (80±1) mm long shall be made in the middle of one of the specimen ends parallel to the longitudinal edge. Both the ends of the incised specimen are then fixed in the grips of testing machine so that the area where the tear

begins is parallel to the direction, in which the breaking load is applied. The moving rate of the testing machine grips is (100±10) mm/min.

The breaking load is determined as an arithmetic mean of five successive maximum values.

2.3.2.4 The strength of interlayer bonds in a textile is determined on rectangular test specimens measuring (50±5) × (200±5) mm. The specimen coat is carefully cut to the cloth and separated using a knife over a length of 50 mm on the side of the oblique notch as shown in Fig. 2.3.2.4 (the separated area is lined). The ends of layers separated in this manner are clamped in the grips of testing machine.

Delamination is effected on a length of 100 mm, and the forces applied are plotted on a graph. The moving rate of the grips is 100±10 mm/min. The interlayer bond strength is determined as an arithmetic mean of 50 % of the lowest peak values to be found in the graph as measured on the central section of the specimen length making up 50 % of the total separated length.

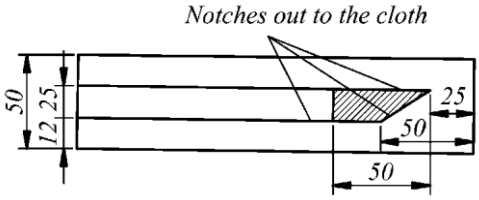

Fig. 2.3.2.4

2.3.2.5 The tear propagation strength of bond joints of laminated textiles is determined on test specimens prepared in such a manner that the middle of the bond joint coincides with the middle of the specimen length and the joint overlaps the specimen by 25 mm. The shape and dimensions of test specimens are determined proceeding from 2.3.2.2. The adhesive applied shall agree with the conditions of the products manufacture.

2.3.2.6 The tear propagation strength of retro-reflective materials is determined on specimens 25±1 mm wide having the initial length between the grips of testing machine 100±5 mm.

The moving rate of the testing machine grips is 300±20 mm/min.

Materials with an adhesive layer are tested after removal of protective paper.

Table 2.3.3.1

L_1, L_2, mm	L_3, mm	b_1, mm	b_2, mm	r, mm	t, mm
Not regulated	80	20	10±0,5	160	10

2.3.2.7 The strength of the adhesive bondage between the retro-reflective material and the adhesive layer is determined on specimens 25±1 mm wide and 200±5 mm long.

Before testing, protective paper is removed from the adhesive layer of the material on a length of 80±5 mm and placed on the surface being tested which measures (50±5) × (90±5) mm.

The loose end of the specimen is secured in the dead lock of the testing machine. Separation of the specimen is achieved by turning the panel by 180° round the axis passing through the specimen end opposite to the loose one.

2.3.3 Compression test.

2.3.3.1 Compression strength of glass-reinforced plastics shall be determined on the test specimens according to Fig. 2.3.2.1-1 and Table 2.3.3.1.

2.3.3.2 Compression strength of rigid foamed plastics shall be determined on rectangular test specimens with side dimensions (50,0±0,5)×(50±0,5) mm and a height from (25±1) to (50±1) mm. The load is increased uniformly. The stress rate shall not be in excess of 5 mm/min.

2.3.4 Determination of modulus of elasticity for glass-reinforced plastics.

The modulus of elasticity in tension shall be determined according to 2.3.2.1, and in compression according to 2.3.3.1. The strain increment is determined with initial load P0 and maximum load Pmax, which are equal to 2 and 8 — 10 % of the breaking load, respectively.

2.3.5 Bend test.

2.3.5.1 The bend test of rigid foamed plastics shall be carried out on the test specimens, the length of which is (120±1,2) mm, width (25±0,25) mm and thickness (20±0,2) mm. The distance between the supports shall be 100 mm, rounding of the supports and the punch (5±0,2) mm. The rate of punch feed is (10±2) mm/min.

2.3.5.2 The bend test of glass-reinforced plastics shall be carried out on test specimens, the length of which equals 20 times their thickness and the breadth is 25 mm. The distance between the supports shall equal 16 times the specimen thickness. The load applied to the midlength of the specimen shall be smoothly increased until the latter breaks.

2.3.5.3 Bend test of laminated textiles.

The test is effected on rectangular specimens measuring (300±5) × (50±1) mm, which are fixed in the testing arrangement as shown in Fig. 2.3.5.3. When the test specimen is fixed the distance between the grips shall be 30 mm.

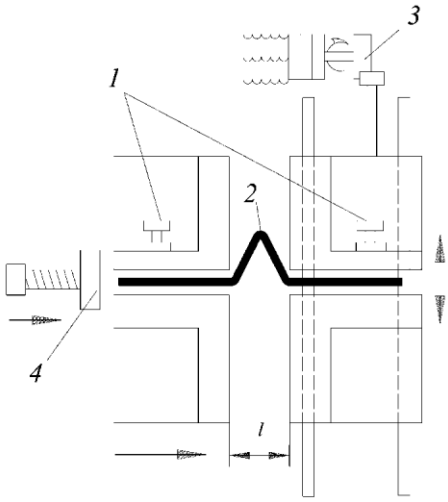

Fig. 2.3.5.3:
1 — grip; *2* — test specimen; *3* — motor; *4* — load

The test specimen being fixed, the grips are brought together until they touch each other. At this time, the load upon the test specimen shall be 10 N.

During the test, the movable grip makes 500 cycles of reciprocating movement with a frequency of 2 Hz and an amplitude of 50 mm.

2.3.6 Determination of relative glass content in glass-reinforced plastic by mass.

In the furnace at a temperature of (625+25) °C resin is removed from a specimen having dimensions (10±1,0) × (10±1,0) mm × laminate thickness, the mass of which together with a crucible shall be determined with an accuracy up to 0,01 g. The glass content in the mass, in %, is obtained from the following formula:

$$S = (G_2 - G_0)100/(G_1 - G_0)$$

where G_1, G_2 = mass of the crucible together with the specimen before and after roasting, in g;
G_0 = mass of the empty roasted crucible, in g.

2.3.7 Determination of apparent density of foam plastics.

The apparent density of foam plastics shall be determined on test specimens of regular shape, having a volume not less than 100 cm^3.

Before conditioning in accordance with 2.3.1.1 the test specimens shall be dried at a temperature (40±5) °C to its constant mass. The apparent density is determined as the ratio of the mass of the specimen to its volume, in m^3.

2.3.8 Determination of shrinkage of plastics at limiting temperature.

A test specimen with dimensions (100±1) × (100±1) × (15±0,5) mm is conditioned at the appropriate temperature during 48 h.

Shrinkage is determined as the ratio, in %, of linear deformation to the appropriate original size of the specimen.

2.3.9 Water absorption test.

2.3.9.1 Water absorption shall be determined on test specimens having the dimensions (50±1) × (50±1) mm and a thickness equal to the thickness of the product, but not more than (50±1) mm.

Before testing the specimens shall be dried to constant mass; drying conditions are specified in the relevant standards. After drying and weighing the specimens are immersed into distilled water and kept at a temperature (23±2) °C for 24 h. Then they are weighed again. Water shall be removed from the specimen surface.

Water absorption is obtained as a fraction of total mass of absorbed water related to the mass of the dry specimen.

Water absorption of foamed plastics is determined as mass of absorbed water related to the surface area of the specimen.

2.3.9.2 A sample, the size of which is determined proceeding from the required number and size of specimens, is immersed in fresh water, the temperature of which is 23±2 °C, to a depth of 1,25 m and conditioned for 7 days.

Before testing, as well as a day and seven days after immersion, the sample is weighed.

After conditioning, test specimens are prepared from the sample.

2.3.10 Ageing test.

2.3.10.1 A sample, which dimensions are determined depending on the required number and dimensions of test specimens is conditioned in semi-immersed condition in the artificial sea water with a temperature (23±2) °C for 30 days. In the process of conditioning the sample shall be subjected every day to two-hour ultra-violet irradiation with 500 W lamp placed at a distance of 50 cm from it. After conditioning test specimens are prepared from the sample for carrying out the required tests.

2.3.10.2 Two samples, the size of which is determined proceeding from the number and size of specimens required are kept suspended during seven days at ambient temperature 70±1 °C, one of the samples being suspended in a closed volume above water. After that, the same number of test specimens is prepared out of each sample.

2.3.10.3 The test for creasing and stability of shape after ageing is effected on square specimens with a side measuring 100±5 mm, which are folded in two directions, parallel to the edges and at right angles to each other, unfolded and then folded once more along the same folds, but in the opposite direction. After each folding, the edges are smoothed down with the fingers.

2.3.10.4 A sample, which size is determined proceeding from the number and size of specimens required, is subjected to the ultra-violet irradiation by means of a lamp having a power of 500 W from a distance of 50 cm during 30 h for type 1 retro-reflective material and during 60 h for type 2 material.

2.3.11 Petroleum-product resistance test.

2.3.11.1 A disc-shaped specimen is inserted in the testing arrangement as shown in Fig. 2.3.11.1.

The arrangement is filled up to the level of 20 mm with a mixture of oils in the following proportion:

30 % of 2, 2, 4 — trimethylethane;

50 % of toluene;

15 % of diisobutylene;

5 % of ethanol.

Other oil products may be used such as diesel fuel, petrol, etc.

The test specimen is conditioned in oils during 22 h at a temperature (20±2) °C.

When the test specimen is extracted, it shall be dried a little bit, the wet surface folded in two and the halves pressed to each other.

The wet surfaces shall not stick to each other, nor shall the fingers be stained when the surfaces shalluched.

2.3.11.2 A sample, which size is determined proceeding from the number and size of specimens required, is immersed in diesel oil having a temperature of 23±2 °C and conditioned there for 30 days.

After conditioning, test specimens are prepared from the sample.

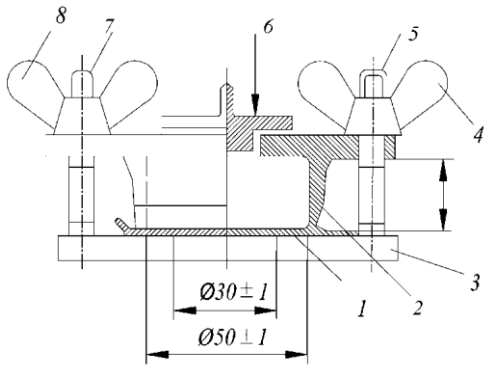

Fig. 2.3.11.1:
1 — test specimen; *2* — cylindrical chamber; *3* — base plate with a hole of 30 mm diameter;
4, 8 — wing nuts; *5, 7* — bolts; *6* — plug

2.3.11.3 A sample, which size is determined proceeding from the number and size of specimens required, is immersed in diesel oil or high octane petrol having a temperature of 23±2 °C to a depth of 100 mm and conditioned there during 24 h.

2.3.11.4 Samples, which size is determined proceeding from the number and size of specimens required, are immersed in crude oil, fuel oil, diesel fuel, high octane petrol and kerosene having a temperature of 23±2 °C to a depth of 100 mm and conditioned there for 14 days.

After conditioning, test specimens are prepared from the samples.

2.3.12 Water resistance test.

2.3.12.1 A sample, which dimensions are determined depending on the required number and size of test specimens, is immersed in artificial sea water with a temperature of (23±2) °C and conditioned during 5 months.

After conditioning, test specimens are prepared from the sample.

2.3.12.2 In the case of laminated textiles, a sample measuring 300 × 200 mm glued along the perimeter shall be conditioned in salty water with salt concentration 3,3 — 3,8 % during 4 h at a temperature of (40±1) °C and at a depth of 500 mm.

2.3.12.3 Specimens of retro-reflective material measuring (70±5)×(150±5) mm, which are secured on an aluminium panel and have an X-shaped diagonal cut in them, are conditioned in artificial sea water at a temperature of 23±2 °C in semisubmersed condition during 16 h in enclosed volume.

After conditioning, the salt residues on the specimen surface shall be washed off.

2.3.12.4 Specimens of retro-reflective material measuring (70±5) × (150±5) mm, which are secured on an aluminium panel, are sprayed with 5 % salt solution and conditioned at a temperature of 35±2 °C for 5 days.

During conditioning, the specimens are dried for 2 h every 22 h.

2.3.12.5 Specimens of retro-reflective material manufactured and mounted in conformity with 2.3.2.7 are soaked in distilled and artificial sea water during 16 h in enclosed volume.

2.3.13 Air permeability test.

A disc-shaped specimen having a diameter of 350 mm is covered with wax in such a way that its centre, 290 mm in diameter, is left open, and then clamped between the flanges of the testing apparatus as shown in Fig. 2.3.13.

From below, a positive air pressure of 27,5 kPa acts upon the test specimen. In 10 to 15 min, the specimen is so immersed in water that its uppermost point is 13 mm below the surface. 1 min later no air bubbles shall remain on the specimen surface. Within the following 5 min no bubbles shall rise to the surface.

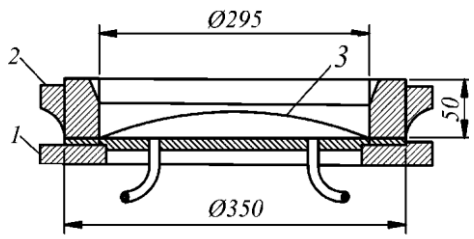

Fig. 2.3.13:
1 — base plate; 2 — clamping ring; 3 — specimen

2.3.14 Cold resistance test.

The cold resistance test of laminated textiles is effected on rectangular specimens measuring (100±5) × (50±5) mm. After being conditioned at a temperature of –30... –5 °C during 1 h and at –80... –5 °C during 10 min, the specimens are bent through an angle of 90 °C.

A sketch of testing apparatus is shown in Fig. 2.3.14.

By the end of the test the distance between the parallel parts of the test specimen shall equal four times its thickness.

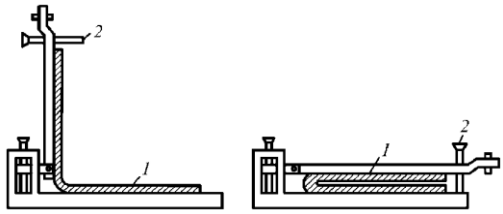

Fig. 2.3.14
Sketch of testing machine:
1 — specimen; *2* — regulating screw

2.3.15 Ozone resistance test.

A test specimen is bent through 180 ° round a mandrel equalling six times the specimen thickness in diameter and subjected during 1h to the influence of air with ozone concentration of 50 pphm at a temperature of 30±2 °C and the relative humidity of 26 %.

2.3.16 A sample, the size of which is determined proceeding from the number and size of specimens required, is successively exposed to ambient air at a temperature of –40 and +70 °C at 8 hour intervals for foam plastics and at 24 h intervals for retro-reflective materials.

2.3.17 Vibration load test.

A test specimen, the type and size of which are determined proceeding from the expected service of the product, is mounted on a vibration-testing machine and subjected to vibration loads having the following parameters:

oscillation amplitude — 2,5 mm;

frequency range — 5 to 500 Hz with a difference of frequency of 32 Hz and an amplitude of vibration acceleration of 10 g.

2.3.18 Determining the retro-reflection factor of a material.

2.3.18.1 The retro-reflection factor is determined on square specimens measuring 150±5 mm. The entrance and observation angles are adopted in accordance with Table 6.7.2.2.

Measurements are taken at the turning angles of reference plane between 0 and 180° with the spacing not exceeding 30°.

2.3.18.2 The retro-reflection factor for a material staying under a film of water is determined on specimens measuring (150±5) × (75±5) mm secured on a vertical plane in the transverse direction.

During testing, the specimen stays under a continuously moving film of water. A sketch of the testing machine shall be found in Fig. 2.3.18.2. Measurements are taken at the observation angle of 0,2° and entrance angle of 5°.

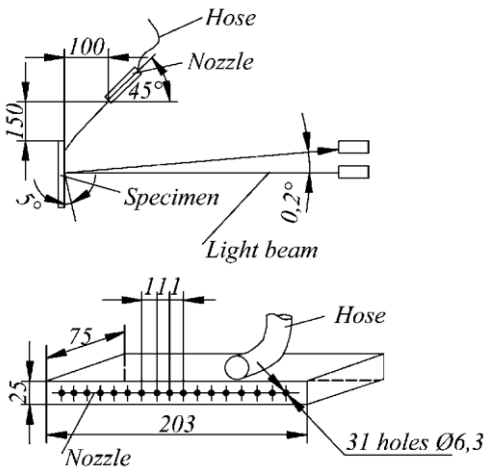

Fig. 2.3.18.2

2.3.19 The bend test of retro-reflective materials is made on specimens measuring (25±5) × (150±5) mm after they have been conditioned, together with a metallic mandrel 3,2 mm in diameter, in a heating chamber at a temperature of 30 °C. The specimens shall be wrapped on the mandrel by a slight touch of the finger.

Retro-reflective materials with an adhesive layer are tested after the removal of protective paper.

2.3.20 The adhesion test of retro-reflective materials is made on square specimens measuring 100±5 mm.

Two specimens are fitted between glass plates 3 mm thick, with their retro-reflective surfaces facing each other and under a load, the mass of which is 18 kg, and conditioned in the heating chamber at a temperature of 65±2 °C during 8 h.

After being conditioned, the specimens are cooled at a temperature of 23±2 °C during 5 min.

2.3.21 Retro-reflective materials are tested for fungus resistance using square specimens measuring 75±2 mm, which are secured on an aluminium panel.

The specimens are conditioned in the soil during two weeks.

After being conditioned, the specimens are wiped clean with a soft cloth wetted in the 70 % solution of ethanol alcohol and then conditioned in accordance with 2.3.1.1 during 48 h.

The microbiological activity of the soil is determined on untreated cotton cloth. After being soil- conditioned for 5 days, the ultimate strength of the cloth with a density of 400 to 475 g/m^2 shall not be less than 50 % of the initial value.

2.3.22 The abrasion-resistance test of retro-reflective material is made on specimens measuring (150±5) × (425±5) mm, which are secured on an aluminium panel.

The panel, which is fixed in the testing machine, is subjected to 1000 cycles of the reciprocating action of bristles at a frequency of 37±2 cycles per minute.

For testing, trimmed black bristles of a pig are used arranged in clusters in 60 openings 4 mm in diameter on a block measuring (90±5) × (40±5) × (12,5±5) mm and having a total weight of 450±15 g. The bristles shall project above the block surface by not more than 20 mm.

2.3.23 The contaminant-resistance test of retro-reflective material is made on square specimens measuring 150±5 mm, which are secured on an aluminium panel.

The specimens are covered with a contaminant layer 0,75 mm thick, a laboratory glass is placed above, and so they remain for 24 h.

After conditioning, the specimens are wiped clean of the contaminant with a soft cloth wetted in white spirit, washed with 1 % solution of a detergent and rinsed in water.

The contaminant used for testing shall have the following composition by weight: 8 parts of soot, 60 parts of mineral oil and 32 parts of white spirit.

2.4 WELDABILITY TEST

2.4.1 The Chapter contains general requirements for the weldability testing procedure of materials being approved.

The number of tests is determined by the test program approved by the Register.

Among the products tested for weldability there are rolled steel, steel castings, steel forgings and aluminium alloys applied in welded ship structures. The test is carried out under the supervision of the Register or in a laboratory recognized by that body.

2.4.2 The weldability of a material shall be examined in the course of approval tests by using the same welding methods that would be applied when producing structures subject to survey by the Register. The welding methods are indicated in the approval documentation for the material.

2.4.3 During the weldability test the following shall be determined:

.1 chemical composition and mechanical properties of the base metal;

.2 cold cracking resistance;

.3 susceptibility to ageing according to 2.2.3.4;

.4 welded joint properties according to Section 4, Part XIV "Welding".

2.4.4 The tests mentioned under 2.4.3 shall be made on plates or other products of maximum thickness taken from at least three different casts.

2.4.5 For metallic materials other than steel the weldability in each particular case is determined proceeding from the results of tests made in conformity with the Register approved program or according to the standards approved by the Register.

2.5 TESTING OF ICE-RESISTANT COATINGS

2.5.1 Assessment of anticorrosive properties in sea water.

2.5.1.1 Tests shall be carried out in compliance with ISO 12944-6 for a corrosivity category Im2 in compliance with ISO 12944-2.

The duration of testing shall be set for the coating lifetime of 15 years.

2.5.1.2 Preparation of test specimens.

Panels for testing shall be made of the steel of the grade used in practice.

The panel shall be dimensioned 150×70 mm as a minimum. The panel thickness shall be least 2 mm, depending on the test. The panel surface shall be worked by abrasive blasting to standard Sa $2^1/_2$ or Sa 3 as per ISO 8501-1. The surface roughness (profile) shall correspond to an average value (*G*) as per ISO 8503-1 and can be checked using a standard as per ISO 8503-2.

Three panels shall be prepared for each type of tests.

Paint shall be applied according to the manufacturer's instructions. It is recommended to apply paint on the panel by airless spraying method. Each layer shall be uniform in thickness and look homogeneous, have no runs, sags, holidays, gas bubbles, wrinkles, blushing changes, paint lack, hard particle inclusions, dried top skin and blisters. The thickness of a dry film as per ISO 2808 shall not exceed the nominal value by more than 20 %.

Prior to testing, the painted test panels shall be conditioned during three weeks at normal temperature (23±2) °C and a relative humidity (50±5) % or at temperature (20±2) °C and a relative humidity (65±5) %.

The panel edges and back side shall be properly protected.

In order to confirm a large lifetime in sea water, the tests shall be carried out according to the following:

ISO 9227 (neutral salt spray) during 1440 h;

ISO 2812-2 (immersion in water) during 3000 h.

2.5.1.3 Assessment of the coating system before artificial ageing in the salt spray and when immersed in water.

Prior to testing, the adhesion assessed by the cross-cut method as per ISO 2409 shall be classed 0 or 1.

For the coating system over 250 μm thick, the test as per ISO 4624 shall be carried out instead of the test as per ISO 2409. The coating is considered to have passed the test if the substrate (A/B) adhesion is retained intact at a pull-off force of less than 5 MPa.

2.5.1.4 Salt spray tests.

The specimens to be tested in a salt spray chamber shall be notched to a substrate with length of 50 mm and at a distance of at least 20 mm from the test specimen edge.

The method principle consists in conditioning the painted specimens in the salt spray chamber with the following assessment of the extent of the paint coating destruction.

The test specimens shall be placed in the chamber facing upwards at an angle of (25±5)° to the vertical. The specimens shall be placed in such a way as to avoid the contact with each other or the chamber, and the solution shall be freely sprayed on the surface exposed. The specimens shall be placed at the same level, so that the solution drops may not drain off the plates or their supports onto the other specimens placed below.

The temperature inside the chamber shall be within (35±2) °C.

In every 24 h, as a minimum, the average rate of solution accumulation in each collector for a horizontal collecting area of 80 cm^2 (a funnel of 100 mm in diameter) shall be measured and be equal to 1 — 2,5 ml/h. The sodium chloride concentration in each collector shall be (50±10) g/l, $p_H = 6{,}5 - 7{,}2$.

The specimens shall be periodically visually examined as per Parts 2 — 5, ISO 4628, leaving therewith the surfaces under test undamaged. The examination time shall not exceed 30 min.

The examinations shall be performed once in 24 h at the most and at the same time of a day. The specimens shall not fully dry out during the examination and, following the latter, shall be immediately returned into the test chamber.

2.5.1.5 Water immersion test as per ISO 2812-2.

The tests shall be carried out in a properly dimensioned tank (recommended dimensions are 700 × 400 × 400 mm). The tank shall have closing appliances, be heat-resistant and be provided with a water solution circulation and aeration system. The solution concentration shall be maintained at the level of 50 g of NaCl per 1 dm^3 of water.

The temperature of water in the tank shall be (40±1) °C.

The specimens shall be immersed in the tank to 3/4 of their length at a distance of 30 mm from one another, the tank sides and bottom. The specimen holders shall be positioned so that the specimens are inclined at an angle of (15 — 20)° to the vertical, and the surface under study shall therewith be at the top and parallel to the direction of a water flow in the tank.

The specimen positions shall be periodically interchanged.

The intermediate examinations of specimens shall be carried out in 1, 3 and 5 weeks and every 250 h of the test.

During the intermediate examinations each specimen shall be taken out of the tank, blotted with a filter paper and the extent of its coating destruction shall be assessed as per Parts 2 — 5, ISO 4628 during 1 min. Following that, the specimen shall be immediately returned into the tank.

2.5.1.6 Assessment after artificial ageing test during the set time.

After the artificial ageing test in compliance with ISO 9227, any substrate corrosion due to a scratch shall not exceed 8 mm if determined by Formula (2.5.1.6).

Any defects within 1 cm from the panel edges shall be ignored.

Table 2.5.1.6

Requirements for coating condition after artificial ageing test during the set time

Assessment method	Requirements
ISO 4628-2	Blistering 0(S0) (assessed without delay)
ISO 4628-3	Rusting Ri0 (assessed without delay)
ISO 4628-4	Cracking 0(S0) (assessed without delay)
ISO 4628-5	Flaking 0(S0) (assessed without delay)

2.5.1.6.1 Scratching.

An engraving machine is recommended for use to get reproducible results. Where it is impracticable, the device for scratching shall correspond to the description of a single-bladed cutting tool in accordance with the requirements of ISO 2409:2013. The scratch may be horizontal, vertical or diagonal. It shall be at least 50 mm long, besides it shall be at least 20 mm away from each edge and shall extend to the very surface of the metal at any point of its length.

2.5.1.6.2 Assessment of corrosion lengthwise of scratch.

After salt spray test, the maximum width *C*, in mm, of corrosion across the scratch shall be measured. The substrate corrosion *M* caused by the scratch is determined by the formula

$$M = (C - W)/2 \qquad (2.5.1.6.2)$$

where W = initial width of the scratch, in mm.

2.5.1.7 Other assessment methods. Requirements.

The adhesion assessed (in 24 h after conditioning) by the cross-cut test method as per ISO 2409 shall be classed 0 or 1. Where the thickness of the dry film of a paint system is over 250 μm, the pull-off test for adhesion as per ISO 4624 instead of using the cross-cut test method as per ISO 2409 shall be carried out.

No defects are allowed for adhesion with the substrate (A/B) at a pull-off force of less than 5 MPa (assessment shall be performed after 24 h of conditioning).

2.5.2 Assessment of resistance to low temperature.

2.5.2.1 Preparation of test specimens.

Panels for tests shall be made of the steel of the grade used in practice. The recommended specimen dimensions: 150×70 mm or 150×100 mm. The thickness of unpainted plate shall be at least 2 mm.

The panel surface shall be worked by abrasive blasting to standard Sa $2^1/2$ or Sa 3 as per ISO 8501-1. The surface roughness (profile) shall correspond to the average value (*G*) as per ISO 8503-1 and can be checked using a standard as per ISO 8503-2. Four panels shall be prepared: 3 panels for testing and 1 check panel.

It is recommended to apply paint to the panel by airless spraying method. Each layer shall be uniform in thickness and look homogeneous. The thickness of a dry film as per ISO 2808 shall not exceed the nominal value by more than 20 % (refer to 2.5.1.2).

Prior to test the painted test panels shall be conditioned during three weeks at a normal temperature (23±2) °C and a relative humidity (50±5) % or at temperature (20±2) °C and a relative humidity (65±5) %.

2.5.2.2 Test procedure.

Specimens shall be placed in a freezing chamber and conditioned at a temperature — (60±3) °C during 2 h followed by the adhesion assessment within 20 — 25 s using the cross-cut test method as per ISO 2409.

Where the thickness of the dry film of a coating system exceeds 250 μm, the cross-cut test method as per ISO 16276-2 shall be used.

2.5.2.3 Assessment of test results.

Coatings are considered to have passed the tests if adhesion on two of three specimens is classed below 3 as per ISO 2409 and ISO 16276-2.

2.5.3 Determination of adhesion strength.

The adhesion strength is determined using the pull-off test as per ISO 4624. The test provides for measuring the force required to break the coating bond.

2.5.3.1 Preparation of test specimens.

The coating system to be tested is applied to the metal specimens of the same thickness (at least 3 mm) and surface texture.

The surface preparation and coating application shall be carried out in accordance with a process instruction for the coating system to be tested.

Prior to test the painted specimens shall be conditioned at a normal temperature (23±2) °C and a relative humidity (50±5) % during at least 16 h.

2.5.3.2 Preparation for tests.

After specimens drying and conditioning, dollies shall be bonded thereon. When selecting an adhesive, its unmixed components shall not cause the visible coating changes within the time of the adhesive curing. Adhesives, which give the highest results, are preferred. In most cases, cyanoacrylate, two-component solventless epoxide and peroxide-catalyzed polyester adhesives shall be used.

The adhesives shall be prepared and applied according to the manufacturer's instructions. To secure a tight, continuous and uniform bond between the dolly and coating, the minimal amount of adhesive shall be applied. After the adhesive curing (generally 24 h), the adhesive and paint shall be cut about the dolly circumference penetrating through to the metal plate surface. To reduce the deformation of the painted specimen during pulling off, a rigid metal ring shall be placed around the dolly.

2.5.3.3 Test procedure.

During the test a tensile force shall be uniform across the entire tension area and be applied normally to the painted surface without any bending moment.

The tension stress rate shall not exceed 1 MPa/s and be perpendicular to the painted coating. The test specimen shall fail within 90 s since tensioning.

To assess the adhesion strength, at least six determinations shall be carried out at a temperature (23±2) °C and a relative humidity (50±5) %.

2.5.3.4 Assessment of test results.

After six tests, the mean value of the adhesion strength shall be determined. The result shall be presented as the mean value and the range. The assessment of the mean percentage of the fracture area and the fracture type in the system being tested shall also be provided.

The fracture nature is presented as follows:

A/*B* — adhesive failure between substrate and the first coating layer;

B — cohesive failure of first coating layer;

B/*C* — adhesive failure between the first and the second coating layers;

N — cohesive failure of the *n*-th layer of a multilayer coating system;

n/m — adhesive failure between the *n*-th layer and the *m*-th layer of a multilayer coating system;

-/*Y* — adhesive failure between the final layer and adhesive;

Y — cohesive failure of adhesive;

Y/*Z* — adhesive failure between adhesive and dolly.

The area of fracture shall be estimated as a percentage to the nearest 10 % for each type of fracture.

Where the failure is mainly associated with the adhesive, the test shall be repeated using another adhesive or, in order to reduce roughness, the surfaces of the coating and the test dolly may be abraded.

2.5.4 Determination of abrasion resistance.

The method concept is determination of abrasion resistance of the coatings applied on a metal substrate with the Taber's abrader.

2.5.4.1 Preparation of test specimens.

Metal specimens dimensioned 100 × 100 × 3(±0,5) mm with a hole 8 mm in diameter at the specimen center shall be prepared for testing. The specimen surface preparation and coating application shall be carried out in accordance with the requirements of a process instruction for the coating system being tested.

If the coating is applied at a temperature (20 — 30) °C, abradability shall be determined at the earliest in three weeks after applying the last coating layer.

2.5.4.2 Test procedure.

The abrasive wheel CS-17 at a 1000 g loading shall be used in testing.

Coated specimens shall be weighed to an accuracy 0,1 mg, and the coating thickness shall be measured at some points within the area to be tested for abrasion.

The coated specimen is placed and secured on a rotating platform. The abrasive wheels are lowered onto the specimen.

The nozzle of a vacuum pump is positioned at a distance of 1 mm above the abrasive disc. A counter is set to zero, and a suction level, to "50". Where the more efficient removal of abrasive dust is needed, the suction level may be increased up to "90". The number of cycles is set to "1000": one cycle of abrasion corresponds to one revolution of the rotating platform.

The vacuum pump and rotating platform are started.

One more specimen, as a minimum, shall be tested.

After testing, the specimen is dismantled, the remains of abrasive dust are removed and the specimen shall thereafter be weighed with to an accuracy 0,1 mg.

2.5.5 Determination of impact resistance in falling-weight testing.

Tests shall be carried out in compliance with ISO 6272-1 with a 20-mm-diameter spherical indenter, dropped under standard conditions.

The method concept is evaluation of resistance of a dry film of paint coating to cracking or peeling from a substrate when it is subjected to a deformation caused by a falling weight.

The tests shall be carried out using the special apparatus, which meets the requirements in ISO 6272-1.

2.5.5.1 Preparation of test specimens.

Test panels shall be flat, undamaged and made of steel names 08kp as per GOST 9045 (ISO 3573) or steel names 08kp, 08ps as per GOST 16523 (or their equivalents), 0,8 — 0,9 mm thick. The panel dimensions shall be such as to allow the test to be carried out at least at five positions spaced no less than 40 mm apart and at a distance of no less than 20 mm from the panel edge.

Each panel shall be prepared in accordance with ISO 1514 by cleaning it with a solvent (xylene, toluene or P-4) and wiping with a filter paper. The cleaning is considered satisfactory if no stains are visible on the paper.

Material of the coating system is applied on the prepared panels. The layer thickness shall be 250 — 300 mm and the time of coating drying shall comply with a specification.

After drying, the coating thickness shall be measured as per ISO 2808. The measurements shall be made at, or as near as possible to, the positions where the test shall be carried out.

Immediately before the testing, the panel shall be conditioned at a temperature (23±2) °C and a relative air humidity (50±5) % during at least 16 h.

2.5.5.2 Test procedure.

The tests shall be carried out at a temperature (23±2) °C and a relative air humidity (50±5) %.

It shall be checked that the guide tube is vertical and the secondary weight is attached, if required, to the primary weight in order to achieve the required loading.

The height of the weight to the required release-point (using the graduations on the guide tube) shall be adjusted and the weight shall be locked in position. The test panel shall be placed on the die with the coated face up, the weight shall be released and allowed to fall on to the test panel.

2.5.5.3 Assessment of test results.

The coating shall be examined with a magnifying glass with 10× magnification. The presence of cracking on the coating of the test panel or peeling from the substrate shall be reported.

The test shall be repeated four times at different positions, giving a total of five drops. The coating is considered satisfactory if at least four test positions show no cracking or peeling from the substrate.

2.5.6 Determination of resistance to cathodic disbondment.

2.5.6.1 Devices and apparatus.

The container of glass or another inert material not affecting the electrolyte pH shall be used for testing.

The container shall be at least 700 mm in diameter or have a side of at least 700 mm, be at least 200 mm high. The container shall be provided with a system for electrolyte aeration.

The anode shall be made of graphite and be, as a minimum, 200 mm long or in diameter, or be made of platinum wire, or platinum grid, or platinized titanium, or other material, which demonstrates the sufficient resistance to anodic polarization in sea water.

Calomel or chlorine-silver reference electrodes shall be used.

A voltmeter with the minimum resistance of 10 MOhm shall provide the measurements within 0 — 2 V to an accuracy 1 mV.

A cathode protective circuit supplied from a d.c. source and being able to maintain an electrode potential of –1050±5 mV on a test specimen with respect to a saturated calomel reference electrode shall be used.

It is preferable to use potentiostatic control, but a galvanostat is also acceptable.

Representative cathode circuits are shown in Figs. 2.5.6.1-1 and 2.5.6.1-2.

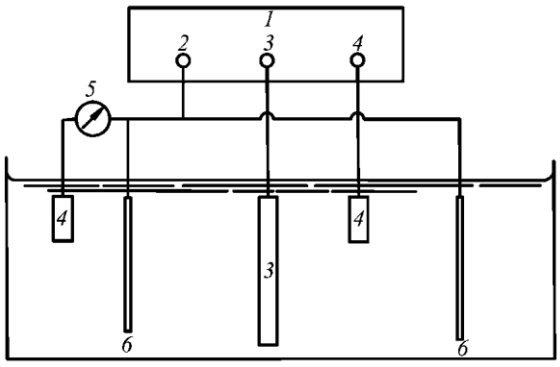

Fig. 2.5.6.1-1
Cathode protective circuit with potentiostatic control:
1 — potentiostat; *2* — work electrode; *3* — anode; *4* — reference electrode; *5* — voltmeter; *6* — test specimen

2.5.6.2 Preparation of test specimens.

Panels for testing shall be made of the steel of the grade used in practice and dimensioned 150 × 70 × 2 mm.

Each panel shall have an insulated conductor with a reliable electrical contact not subjected to corrosion.

The panel surfaces shall be prepared according to the specification for a coating system. If the requirements are not specified, the panels shall be worked by abrasive blasting according to ISO 1514. Thereupon the panels shall be painted as per the specification for the coating system. It is recommended to apply the same coating system on the panel back side and edges. To prevent edge effect, a thicker film shall be applied on the edges.

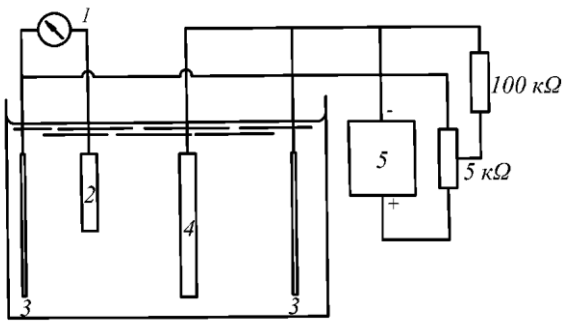

Fig. 2.5.6.1-2
Cathode protective circuit with galvanostatic control:
1 — voltmeter; *2* — reference electrode; *3* — test specimen; *4* — anode; *5* — DC source

All the unpainted surfaces of test specimens and the connections of insulated conductors shall be protected with a coating or paraffin melted at a temperature 70 °C, or solvent-free epoxy resin, or another suitable coating with the better protective properties than the material under test.

Three check panels, which will not be connected to the cathode controlled system, shall also be prepared.

The thickness of test specimens shall be measured according to ISO 2808.

Prior to the commencement of testing, a hole (10±1) mm in diameter shall be made in the coating of each test specimen at a distance of more than 30 mm from the panel edge in any suitable manner but preferably by means of an abrasive jet.

Then the test panels shall be checked for the presence of random pores at a voltage of 10 kV using a continuity detector.

Three panels shall be used in cathode disbondment testing.

2.5.6.3 Test preparation.

The anode shall be placed at the center of a tank and connected to the positive pole of the cathode protective circuit.

Each panel shall be numbered by a suitable material, which will remain intact in testing.

Each panel in the tank shall be placed away from the anode and the tank bottom by more than 300 mm and 50 mm, respectively, and completely immersed in electrolyte after filling the tank. The electrolyte composition is given in Table 2.5.6.3. Make sure that the panels do not touch one another and the tank sides, that the side of the panel with a holed coating is not screened from the anode with anything including other panels, and also that nothing interferes with the electrolyte flow around, and between, the panels.

Each panel with a negative pole shall be connected to the cathode protective circuit with an insulated conductor.

The check panels shall be similarly placed in an equivalent tank having no anode and cathode protective circuit.

The tank shall be filled with electrolyte for 200 mm minimum. Electrolyte temperature (23±2) °C shall be maintained.

Table 2.5.6.3

Electrolyte composition (artificial sea water)

Component	Concentration, g/l
Sodium chloride	23
Hexahydrated magnesium chloride	9,8
Decahydrated sodium sulphate	8,9
Calcium chloride	1,2

2.5.6.4 Test procedure.

The continuous flow of electrolyte in the tank shall be maintained. Electrolyte shall be fully replaced within maximum three days. It is allowed to fully replace electrolyte once in not more than 7 days.

Electrode potential shall be — 1050±5 mV relative to the reference electrode. Electrode potential shall be checked once in 24 h or more frequently, if required.

The test duration is 26 weeks.

The test duration may be shortened to 3 months in case the confirmation of the positive results of the exploitation of cathode protection coating.

2.5.6.5 Assessment of test results.

The test and check panels shall be subjected to non-destructive testing.

At intermediate examinations, the panels shall be quickly disconnected from the circuit, removed from the tank and washed with the tap water avoiding damages to the coating and removing the cathode sediment at the coating hole.

The panels shall remain wet during examinations.

The blisters appeared shall be assessed according to ISO 4628-2, considering the distance from the blisters to the hole.

The results obtained on test and check specimens shall be compared.

After testing, the panels shall be washed in the tap water avoiding damages to the coating.

The coating shall be fully examined and assessed according to ISO 4628-2, considering the blisters and hole spacing. The blisters shall be divided into groups: related to the hole and remote from it.

The blisters developed in the areas with the film thickness less than required shall be ignored during the assessment.

The adhesion failure is determined as follows:

two cuts crossing the hole shall be made with a sharp knife on the coating penetrating it to the substrate. The coating around the hole is separated from the substrate with a knife tip;

an approximate distance, in mm, for which the coating may be separated from the substrate as compared with the check specimens, shall be reported.

The results obtained on the test and check specimens shall be compared.

Value of cathode disbandment *L,* in mm, shall be calculated using formula

$$L = \frac{1}{\sqrt{\pi}}(\sqrt{S_2} - \sqrt{S_1}) \qquad (2.5.6.5)$$

where S_2 — surface area with disbanded coat including cut-out area, in mm²;
S_1 — cut-out area, in mm².

Coat as per standard ISO 4628-2 shall be assessed immediately after testing. The value of cathode disbandment shall be determined in 4-5 hours after testing. Holding and assessment shall be performed at the ambient temperature 23±2 °C and relative humidity 50±5 °C.

2.5.7 Test for determining coefficient of friction for ice.

2.5.7.1 Preparation of test specimens.

Metal specimens dimensioned (250 × 130 × 3 (±0,5)) mm shall be prepared for testing. The specimen surface preparation and coating application shall be carried out in accordance with a process instruction of the coating manufacturer.

The test coat shall contain defects affecting the result, such as scale, paint, shagreen, etc.

2.5.7.2 Description of the device recommended for testing.

Examples of mechanical devices are shown in Fig. 2.5.7.2.

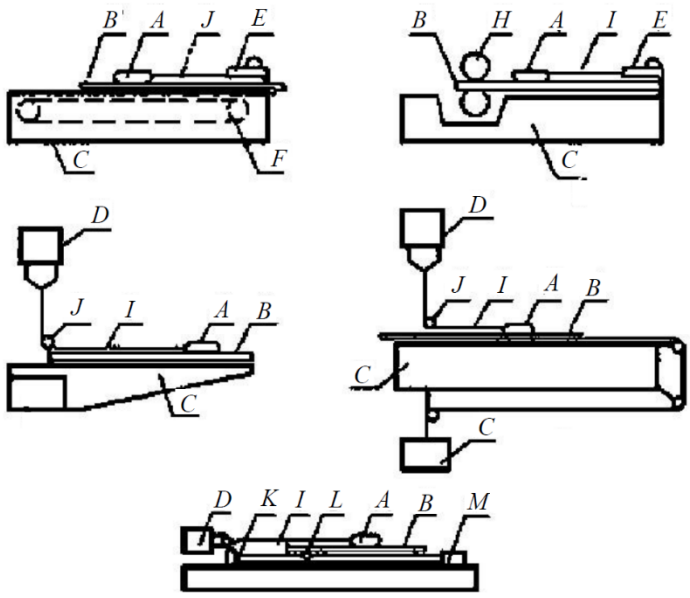

Fig. 2.5.7.2
Types of devices for determining coefficient of friction of the protective coating on ice:
A — specimen; *B* — bearing plane with recess for ice; *C* — supporting base; *D* —gauge;
E — spring gauge, *F* — constant speed chain drive; *H* — constant speed drive rolls; *I* — non-extensible bond;
J — low-friction pulley; *K* — worm screw; *L* — half-coupling; M — synchronous motor

2.5.7.3 Test procedure.

To perform tests, the bearing plane recess *B* (refer to Fig. 2.5.7.2) shall be filled with distilled water cooled to the ambient temperature –(20±2)°C and held within the time necessary for ice

formation. Panels for tests shall be rectangular dimensioned (250 x 130 x 3 (±0,5)) mm. Before testing, the specimens shall be conditioned at the temperature of (20±2)°C for at least 15 minutes. Tests shall be carried out under standard conditions at the temperature of –(20±2)°C.

A panel with applied coating shall be placed on the bearing plane *B* and fixed in the device (refer to Fig. 2.5.7.2). Then the travel mechanism pre-adjusted to the specified speed shall be switched on.

Due to the frictional loads between the adjoining surfaces of the specimen and ice, they can remain fixed relative to each other until the force shifting the sample becomes equal to or exceeds the static friction force between the surfaces. That maximum initial force value shall be marked as a force, which is a component of the initial (static) coefficient of friction.

The average force value shall be visually marked or marked by means of strain gauges, as read on the indicator scale with a uniform movement of the surfaces relative to each other for 1 min. This force is equal to the kinetic sliding friction force, which is necessary to maintain the uniform, linear surfaces movement relative to each other.

To assess sustainability of results three panels of each coating type shall be tested with the speed of 120, 150 and 180 mm/min varying three variants of vertical load (uniformly distributed along the specimen) taken within 2 — 5 mass range of the test panel.

2.5.7.4 Assessment of the test results.

The coefficient of initial (static) friction is calculated as follows:

$$\mu_s = A_s/m,$$

where A_s — initial motion scale reading, in g;
m — specimen weight, in g.

The (kinetic) coefficient of sliding friction is calculated as follows:

$$\mu K = A_K/m,$$

where A_K — average scale reading obtained during uniform sliding of surfaces, in g.

The accuracy algorithm for test results when using the device is approved in accordance with ISO 5725. "Accuracy (correctness and precision) of measurement methods and results".

2.6 TESTING OF SHOP PRIMERS NOT REMOVED BEFORE WELDING

2.6.1 General.

The present procedure is applied to approval tests of shop primers not removed before welding, which are intended for protection from corrosion of steel parts during their manufacture, and also covers arc welding. The text of the procedure has been made compliant with the requirements of ISO 17652-2 (DVS 0501, 1976).

The conditions of testing providing the basis for the present procedure imply the presence of a deep root gap in the weld causing high degree of porosity not encountered under normal conditions. However, high degree of porosity is an essential pre-requisite for conducting tests aimed at receiving quantitative estimation of the influence of primers on pore formation during welding. The present test procedure conditions are applicable for specially equipped testing centres.

2.6.2 Test procedure.

2.6.2.1 An overlap weld test specimen is used for testing, as shown in Fig. 2.6.2.1. Plates used for the test specimen shall have the following dimensions: 12 × 80 × 200 mm and 12 × 50 × 200 mm.

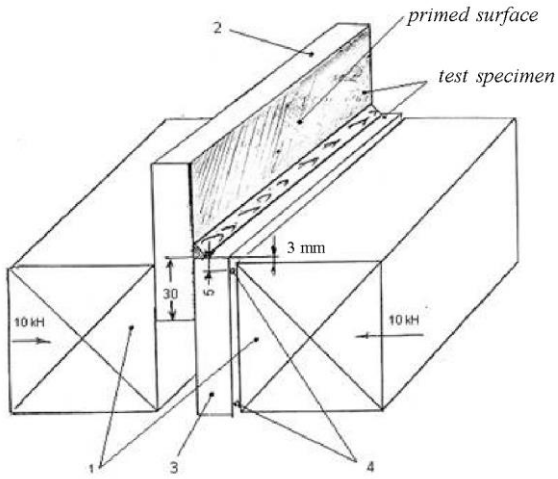

Fig. 2.6.2.1
A standard test specimen for pore formation with a control weld:
1 — vice clamps; *2* — a plate with the dimensions 12×8×200 mm coated with controlled shop primer; *3* — a plate with the dimensions 12×50×200 mm; *4* — 2 mm copper wire; *5* — shop primer; *6* — control overlap weld

To prepare a specimen, in general, low carbon steel shall be used, whose chemical composition complies with the following requirements (% of the mass): $\mathrm{C} = 0{,}07 - 0{,}13$; $Si \leq 0{,}40$; $\mathrm{M}n = 0{,}30 - 0{,}60$; $\mathrm{P} \leq 0{,}045$; $S \leq 0{,}045$.

Plates shall have smooth, flat and undamaged surfaces. Burrs, if any, shall be carefully removed with a filer along the edge of the overlap joint. Before applying the coating, the parts shall be degreased and cleaned by sand-blasting.

All in all, 8 specimens shall be prepared, each having marking.

2.6.2.2 Only one in two specimens shall be coated, with dry coating skin thickness in accordance with the manufacturer's specifications, as shown in Fig. 2.6.2.1. The coating thickness shall be uniform on the whole surface of the specimen.

The coating thickness shall be measured with the proper devices and with proper accuracy and checked on reference specimens, e.g. smooth plates, at least 1 mm thick or glass plates. In doubtful cases, the coating thickness shall be determined under the microscope.

Plates and specimens shall be coated in one go, that is, one reference specimen as the first and one as the last batch piece.

To determine the mean coating thickness 10 measurements shall be done for each specimen. On the basis of the measurements mean values of the coating thickness and actual deviations are determined. In case of non-compliance with the coating thickness values stated above, the coating shall be removed.

2.6.2.3 Specimens may be welded only after the drying period of the coating in accordance with its specification. Welded plates shall be clamped in a vice along their length with clamping force of 10 kN. In places marked in Fig. 2.6.2.1, a soft-annealed copper wire of 2 mm thickness shall be inserted along the whole length between the plate and the vice jaw. Before welding the clamps shall be tilted to an angle of 45° so that welding can proceed in the lower PA (gravity) position.

The following welding parameters shall be observed:

welding process — MAG welding with solid wire electrode: 135 (MAG, ISO 4063);

welding procedure — fully mechanized (A);

current — DC electrode positive;

current — 250A, voltage — 30V, welding speed — 300 mm/min;

shielding gas — welding carbon dioxide, type C1 in accordance with EN 439 (purity not less than 99,70 %, dew point max –35 °C);

gas flow rate — 15 l/min;

stick out (the distance between the contact tube and the theoretical weld root point) — 16 mm;

consumable, type — G3Si1 in accordance with EN 440;

consumable, diameter — 1,2 mm.

The chemical composition of the consumable corresponding with the type G3Si1 in accordance with EN 440 (% of the mass):

$C = 0{,}08 - 0{,}13$; $Si = 0{,}80 - 0{,}95\%$; $\mathrm{M}n = 1{,}45 - 1{,}60$; $P \leq 0{,}025$;

$S \leq 0{,}025$; $Ni \leq 0{,}15$; $Mo \leq 0{,}15$; $Al \leq 0{,}02$; $Ti + Zr \leq 0{,}15$.

Consumable surface: coppered.

The values of the welding current, voltage, welding speed, gas flow rate and stick out rate shall be contained within ±5 % of the nominal limit.

Electrical measuring devices used to control the technological welding process shall have the tolerance class of not more than 1 %.

2.6.3 Determination of porosity.

Welds shall be subjected to breaking in such a manner that pore boundaries are clearly visible. Breaking shall be done alone the bisecting line of the angle made by the edges of the welded joint. If this requirement is not fulfilled, the specimen shall be discarded. Evaluation shall be done at x10 magnification. The image shall be projected onto a polished glass disc of about 200 mm in diameter, where the area of pores shall be determined. The size of an individual pore shall be determined as the largest in the two mutually perpendicular directions. The pore projection is determined as an ellipse with two sizes as main axes, on the basis of which the pore area is calculated.

Pores, the largest main axes of which are ≤0,5 mm, non-magnified, are not evaluated. Evaluation shall be done on the basis of 100 mm: 60 mm from the beginning of the weld and 40 mm from the end of the specimen are not included in the estimation of the results. The following data shall be determined for each specimen:

the number of pores, n;

the total pore area, *F* mm^2;

the mean area of an individual pore, mm^2.

Mean values (expected values) and 95 % confidence intervals shall be set for the following parameters:

the number of pores and the total pore area summed;

the area of an individual pore and the 95 % confidence interval for mean values with the accuracy to one decimal place.

2.6.4 Test report.

A test report shall be compiled for each test, containing the following:

primer mark/brand name;

characteristics of the coating pigments;

characteristics of the bonding base of the coating;

chemical composition of the specimens of the base metal and welding wire;

coating thickness (individual and mean values);

calculation results (individual and mean values): number of pores, n; total pore area, mm^2; mean area of individual pores, mm^2;

conclusion on the compliance/non-compliance with the requirements of 6.5.4.4;

date, name and address of the testing centre. The signature of the executive in charge and the person responsible for conducting the tests.

The following documents shall be attached to the report:

a report on selection of the specimens from the batch of products indicating the batch number;

Manufacturer's Certificates for the shop primer;

Manufacturer's Certificates for the base metal and welding consumables;

the Manufacturer's Certificate for the shielding gas used during welding tests for pore formation.

3 STEEL AND CAST IRON

3.1 GENERAL

3.1.1 The present requirements are valid for hull structural steel, steel for boilers and pressure vessels, steel pipes and tubes, steel for structures operating at low temperatures, chains, steel forgings and castings, cast iron and steel wire ropes.

In accordance with 1.1.4 all the materials, semi-finished products and items mentioned in this Section shall be manufactured by recognized works (refer to 1.3.1.2).

3.1.2 It is permitted to use semi-finished products manufactured according to standards or other specifications, if it is proved that requirements contained therein are equivalent to those stipulated by the Rules.

3.1.3 Steel shall be melted in an oxygen steel-making converter, electric or open hearth furnaces, and cast iron in cupolas or electric furnaces. The deoxidation of steel is conducted in accordance with the requirements of Tables 3.2.2-1 and 3.2.2-2. The condition of steel supply shall meet the requirements of Tables 3.2.4-1 and 3.2.4-2.

Use of other methods of steel and cast iron making shall be agreed with the Register.

When steel is not produced at the works where it is rolled, forged or drawn, a Manufacturer's Certificate shall be supplied to the surveyor at the mill engaged in further processing of the steel stating the steelworks, process of manufacture, number of cast and chemical composition of steel.

The surveyor shall have access to steel-making and steel-rolling works.

3.1.4 The possibility of application, in particular hull structural members not essential to the longitudinal strength, of materials not fully complying with the requirements of this Section shall be determined by the Register after checking the stated characteristics as ensuring the required level of structures safety.

Technical supervision during the acceptance of such materials by the Register shall be performed in accordance with 2.4.1.3 of Part III "Technical Supervision during Manufacture of Materials" of the Rules for Technical Supervision during Construction of Ships and Manufacture of Materials and Products for Ships.

3.1.5 The conclusion by the Register on the conformity of hull structural steel grade may be given after performing the tests specified in the relevant Chapters of this Section.

3.2 HULL STRUCTURAL STEEL

3.2.1 General.

3.2.1.1 The requirements of the Chapter apply to the weldable hot-rolled steel of a normal and higher strength used for plates, strips, sections and bars and intended for hull structures and components being subject to the Register survey during their manufacture.

Hull structural steel conventionally falls into normal strength steel (a minimum yield stress 235 MPa) and higher strength steel (of three strength levels with a minimum yield stress of 315, 355 and 390 MPa, respectively). The requirements for high strength steel (a minimum yield stress 420 MPa and over) are given in 3.13.

The steel is subdivided into grades as shown in Tables 3.2.2-1 (for normal strength steel), 3.2.2-2, 3.2.3 and 3.5.2.3 (for higher strength steel) depending on the values and conditions required for the performance of impact testing. The relevant data for high strength steel are given in Table 3.13.3-1.

The requirements of normal and higher strength corrosion-resistant steel for cargo oil tanks are specified in 3.18.

The requirements of the Chapter depending on the rolled products thickness apply to the steel of the following types:

steel plates and strips of all grades having thickness 150 mm and less;

steel sections and bars of all grades having thickness 50 mm or less.

The requirements for steel rolled products of a larger thickness than specified above may be different from the stated ones, but shall be considered in each particular case and agreed with the Register. The special requirements for the rolled products with thickness of less than 15 mm designed for the ice class ships and icebreakers are specified in 3.5.

Steel that does not fully meet the requirements stated in this Chapter, differs in composition, deoxidation practice and alloying as well as mechanical properties (e.g. intermediate upper yield stress level, as compared to that required in 3.2.3 and other respective characteristics) may be accepted by the Register for use, except for in hull structural elements (Part II). Such steel shall be given a special designation, the letter S may be added to the grade symbol.

3.2.1.2 The recognition of steel rolled products manufacturers by the Register shall be carried out in accordance with 1.3 for each steel grade stated by the manufacturer, for the semi-finished product type and condition of supply. Where different steel production technologies are used at the works, materials approval is carried out individually for each of them.

The procedure for recognition of manufacturers of semi-finished products (ingots, billets, slabs, blooms) for hull structural steel and the procedure for recognition of hull structural steel manufacturers are given in 2.2.1 and 2.2.2 accordingly, Part III "Technical Supervision during Manufacture of Materials" of the Rules for Technical Supervision during Construction of Ships and Manufacture of Materials and Products for Ships.

The weldability of each steel grade and its suitability for bending shall be confirmed by the manufacturer during the initial recognition of steel rolled products by the Register. The survey and tests at the manufacturer's during its recognition by the Register are conducted in accordance with the program (chart) agreed with the Register.

Where the steel is intended for welding with a heat input above 50 kJ/cm, recognition is effected according to the chart given in 2.2.3, Part III "Technical Supervision during Manufacture of Materials" of the Rules for Technical Supervision during Construction of Ships and Manufacture of Materials and Products for Ships.

3.2.1.3 A manufacturer bears responsibility and assures the use of necessary technological production processes, systems and monitoring methods for the fulfilment of the Register requirements. In case of the deviation of production technology or monitoring and/or of the product quality level degradation, the manufacturer shall identify the cause and take all measures to prevent its recurence. The report on the investigations and analysis conducted on the deviations that took place shall be submitted to the representative of the Register. Scope

and frequency of tests may be increased until the stability of product test results and the confidence in quality level have been recovered.

3.2.1.4 The rolling procedures for normal and higher strength steels used by a manufacturer shall comply with the condition of supply given in 3.2.4, and for higher strength Grade F steel with that given in 3.5.2.4, and for higher strength steel with that given in 3.13.4.

The applicable rolling procedures are presented in Table 3.2.1.4 in the form of diagrams, and their definitions are given below.

As rolled (AR) means procedure, which involves steel being cooled as it is rolled with no further heat treatment. The rolling and finishing temperatures are typically in the austenite recrystallization region and above the normalizing temperature. The strength and toughness properties of steel produced by this process are generally less than steel heat treated after rolling or than steel produced by advanced processes.

Normalizing (N) means procedure, which involves heating and holding rolled steel above the critical temperature, AC3, and in the lower end of the austenite recrystallization region for a specific period of time, followed by air cooling. The process improves the mechanical properties of as rolled steel by refining the grain size and homogenizing the microstructure.

Controlled rolling (CR) (Normalizing rolling (NR)) means rolling procedure in which the final deformation is carried out in the normalizing temperature range, allowed to cool in air, resulting in a material condition generally equivalent to that obtained by normalizing.

Thermo-mechanical rolling (TM) means a procedure, which involves the strict control of both the steel temperature and the rolling reduction. Generally, a high proportion of the rolling reduction is carried out close to the Ar3 temperature and may involve the rolling in the dual phase temperature region.

Unlike controlled rolled (normalized rolling), the properties conferred by TM cannot be reproduced by subsequent normalizing or other heat treatment.

Table 3.2.1.4

Diagrams of steel processing procedures

Structure	Temperature	Type of processing					
		Conventional processes				Thermo-mechanical processes	
		AR	N	CR (NR)	QT	TM	
Recrystallized austenite	Normal slab heating temperature Normalizing or quenching temperature	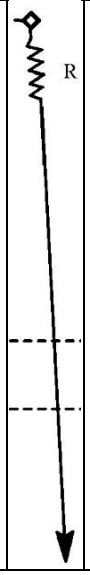	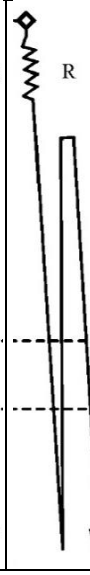	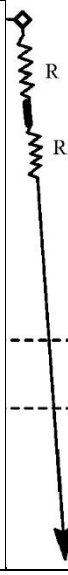	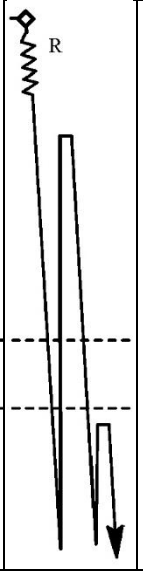	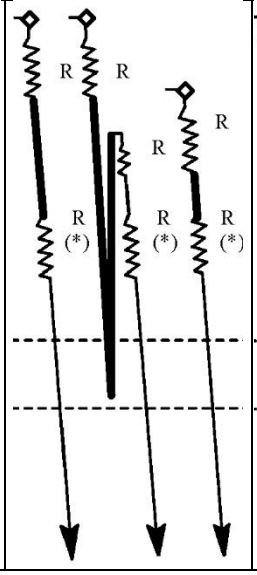	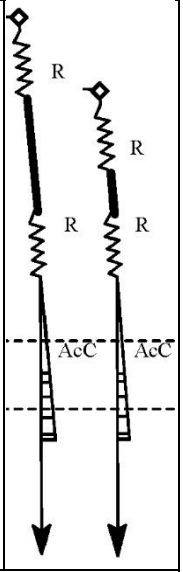
Non-recrystallized austenite							
Austenite + Ferrite	A_{r3} or A_{C3}						
Austenite + Pearlite or Ferrite + Bainite	A_{r1} or A_{C1} Tempering temperature						

Symbols:
AR — as rolling procedure corresponding hot-rolled steel making;
N — normalizing;
CR (NR) — controlled rolling (normalizing rolling);
QT — quenching and tempering;
TM — thermo-mechanical rolling (thermo-mechanical controlled processing);
R — reduction;
(*) — temperature of the dual phase region of austenite and ferrite;
AcC — accelerated cooling.
◇— start rolling temperature;
▬ — delays to allow cooling before finishing rolling process.

The use of accelerated cooling on completion of TM-rolling as well as the use of tempering after completion of TM-rolling shall be agreed with the Register.

Accelerated cooling (AcC) means a process, which aims to improve mechanical properties by controlled cooling with rates higher than air cooling immediately after the final TM-rolling operation. Direct quenching is excluded from accelerated cooling.

The material properties conferred by TM and AcC cannot be reproduced by subsequent normalizing or other heat treatment.

Quenching and Tempering (QT): quenching involves a heat treatment process in which steel is heated to an appropriate temperature above the **AC3**, held for a specific period of time, and then cooled with an appropriate rate for the purpose of hardening the microstructure; tempering subsequent to quenching is a process in which the steel is reheated to an appropriate temperature not higher than the AC1, maintained at that temperature for a specific period of time to restore toughness properties (KV) by improving the microstructure and reduce the residual stress caused by the quenching process.

3.2.1.5 When the works are surveyed, the documentation, which describes and specifies the fulfilment of CR, TM, schedules or TM with AcC, normalising, quenching with tempering, etc., shall be submitted to the Register representative on his demand. As specified in 3.2.1.3, a manufacturer is responsible for the observance of all mentioned rolling schedules and heat treatment procedures in the process of steel manufacture. The appropriate records shall be

verified by the manufacturer and submitted to the Register representative when performing his duties.

Where deviations from the programmed rolling schedules or heat treatment procedures exist, the products may be accepted for use on conditions set forth in 3.2.1.3.

The attention of the users shall be drawn to the fact that when fatigue loading is present, the effective fatigue strength of a welded joint of higher strength steel may not be greater than that of a welded joint in normal strength steels.

Before subjecting steels produced by thermo-mechanical rolling to further heating for forming or stress relieving, or using high heat-input welding, special consideration shall be given to the possibility of a consequent reduction in mechanical properties.

3.2.2 Chemical composition and structure.

The chemical composition of steel shall be determined by the manufacturer from the results of analysis of the samples taken from each ladle of each cast. The manufacturer's analysis will be accepted subject to periodical checks if required by the Register.

The chemical composition of normal strength steel shall comply with the requirements of Table 3.2.2-1 and that of higher strength steel — with the requirements of Table 3.2.2-2. For steel plates and wide flats over 50 mm thick, slight deviations in the chemical composition of alloying elements may be allowed. Said deviations shall be justified and approved by the Register.

In Tables 3.2.2-1 and 3.2.2-2 the content of acid soluble aluminium is included. The total aluminium content shall be at least 0,020 %.

In case of the determination of the content of elements not listed in Tables 3.2.2-1 and 3.2.2-2, chromium, nickel and copper content in normal strength steel shall not exceed 0,30 % each.

For normal strength carbon steel the total carbon content plus 1/6 of the manganese content shall not exceed 0,40 %. The carbon equivalent, in %, for higher strength steels is calculated for guidance at approval tests from the ladle analysis using the formula

$$C_{\mathrm{eq}} = C + \frac{Mn}{6} + \frac{Cr+Mo+V}{5} + \frac{Ni+Cu}{15}. \qquad (6.5.15)$$

The arsenic content in steels of all the grades shall not exceed 0,08 %.

The steel may contain separately or in combinations aluminium, vanadium, niobium or other grain refining elements. Where the above elements are introduced separately, their content shall be in accordance with Tables 3.2.2-1 and 3.2.2-2. Where the elements are used in combinations, their minimum content in steel is not specified.

Table 3.2.2-1

Chemical composition and mechanical properties of normal strength steel

Grade		A			B			D			E		
Deoxidation practice for thickness *t*, mm		*t* ≤ 50 Killed or semi-killed			*t* ≤ 50 Killed or semi-killed			*t* ≤ 25 Killed			Killed, fine-grained, aluminium treated		
		t > 50 Killed			*t* > 50 Killed			*t* > 25 Killed, fine-grained, aluminium treated					
Condition of supply		According to Table 3.2.4-1											
Chemical composition (ladle analysis), %	C (max)	0,21			0,21			0,21			0,18		
	Mn (min)	2,5 × C			0,80			0,60			0,70		
	Si (max)	0,50			0,35			0,35			0,35		
	P (max)	0,035			0,035			0,035			0,035		
	S (max)	0,035			0,035			0,035			0,035		
	Al (min)	–			–			0,015			0,015		
Tensile properties	Tensile strength R_m, MPa	400 — 520											
	Yield stress R_{eH}, min, MPa	235											
	Elongation A_5, min, %	22											
Impact testing	Test temperature, °C	+20			0			–20			–40		
	Plate thickness, *t*, mm	≤50	>50 ≤70	>70 ≤150	≤50	>50 ≤70	>70 ≤150	≤50	>50 ≤70	>70 ≤150	≤50	>50 ≤70	>70 ≤150
	Impact energy, min, J, longitudinal specimens, KV_L	–	34	41	27	34	41	27	34	41	27	34	41
	Impact energy, min, J, transverse specimens, KV_T	–	24	27	20	24	27	20	24	27	20	24	27

N o t e s : 1. In case of the positive test results of the works' survey Grade A steel of 12,5 mm thickness may be rimmed.
2. Maximum 0,23 % carbon content for Grade A sections.
3. In case of the positive test results of the works' survey in the impact tested Grade B steel manganese content can be reduced to 0,60 %.
4. In case of the positive test results of the works' survey at the supply of steel of all grades slight deviations in the chemical composition are permitted after TM rolling, refer to 3.2.2.
5. For Grade D steel over 25 mm thick.
6. For Grade D steel over 25 mm thick and Grade E steel the total aluminium content may be determined instead of acid soluble content. In such cases the total aluminium content shall be not less than 0,020 %. A maximum aluminium content may also be specified by the Register. In case of the positive test results of the works' survey other suitable grain refining elements may be used.
7. The Classification Society may limit the amount of residual elements which may have an adverse effect on the working and use of the steel (e.g. copper and tin).
8. Where additions of any other element have been made as part of the steelmaking practice, the content shall be indicated and agreed with the Register.
9. In case of the positive test results of the works' survey and statistical data justification for all thicknesses of Grade A sections the upper limit for the specified tensile strength range may be exceeded.
10. Refer to 3.2.3 and 3.2.6 for impact tests.
11. Charpy V-notch impact tests are generally not required for Grade B steel with thickness of 25 mm or less.
12. Impact tests for Grade A over 50 mm thick are not required when the material is produced using fine grain practice and furnished normalised. In case of the positive test results of the works' survey TM rolling may be accepted without impact testing.
13. Sampling tests may be carried out selectively for steel allowed for supply without impact tests. The results shall meet the relevant requirements of the Table, and for Grade A steel up to 50 mm thick, KV_L > 27 J at 20 °C.
14. For full thickness flat tensile test specimens with a width of 25 mm and a gauge length of 200 mm the elongation shall comply with the following minimum values:

Thickness t, mm	*t* ≤ 5	5 < *t* ≤ 10	10 < *t* ≤ 15	15 < *t* ≤ 20	20 < *t* ≤ 25	25 < *t* ≤ 30	30 < *t* ≤ 40	40 < *t* ≤ 50
Elongation, %	14	16	17	18	19	20	21	22

Where the content of aluminium or another grain refining element proves to be lower than required, the Register may require the austenite grain size to be determined, which shall not be greater than grain size No. 5.

For higher strength steel subjected to the thermo-mechanical rolling (TM), the carbon equivalent shall be in compliance with the requirements of Table 3.2.2-3.

Instead of the carbon equivalent the factor estimating the steel susceptibility to cold cracking may be determined according to the formula

$$P_{cm} = C + \frac{\mathrm{Si}}{30} + \frac{\mathrm{Mn}}{20} + \frac{\mathrm{Cu}}{20} + \frac{\mathrm{Ni}}{60} + \frac{\mathrm{Cr}}{20} + \frac{\mathrm{Mo}}{15} + \frac{\mathrm{V}}{10} + 5\mathrm{B}.$$

Table 3.2.2-2

Chemical composition and mechanical properties of higher strength steel

Grade		A32	D32	E32	A36	D36	E36	A40	D40	E40
Deoxidation		Killed, fine-grained, aluminium treated								
Condition of supply		According to Table 3.2.4-2								
Chemical composition (ladle analysis), %	C_{max}	0,18								
	Mn	0,9 — 1,6								
	Si_{max}	0,5								
	P_{max}	0,035								
	S_{max}	0,035								
	Cu_{max}	0,35								
	Cr_{max}	0,2								
	Ni_{max}	0,4								
	Mo_{max}	0,08								
	Al_{min}	0,015								
	Nb	0,02 — 0,05 } ≤ 0,12								
	V	0,05 — 0,10 } ≤ 0,12								
	Ti_{max}	0,02 } ≤ 0,12								
Tensile properties	Tensile strength, R_m, MPa	440 — 570			490 — 630			510 — 660		
	Yield stress R_{eH}, min, MPa	315			355			390		
	Elongation A_5, min, %	22			21			20		

Notes: 1. The letter "H" may be added either in front or behind the grade mark of higher strength steel (e.g. DH36).

2. Up to a thickness of 12,5 mm the minimum manganese content may be reduced to 0,70 %.

3. The total aluminium content may be determined instead of the acid soluble content. In such casesthe total aluminim content shall be not less than 0,020 %.

4. The steel shall contain aluminium, niobium, vanadium or other suitable grain refining elements, either singly or in any combination. When used singly the steel shall contain the specified minimum content of the grain refining element according to Table 3.2.2-2. When used in combination, the specified minimum content of a fine graining element is not applicable.

5. In case of the positive test results of the works' survey at the supply of higher strength steel of any grade in the TM rolled condition variations in the specified chemical composition may be permitted, refer to 3.2.2.

6. Refer to 3.2.2 and 3.2.6 for C_{eq} and P_{cm}.

7. Where additions of any other element have been made as part of the steelmaking practice, the content shall be indicated and agreed with the Register.

8. For full thickness flat tensile test specimens with a width of 25 mm and a gauge length of 200 mm the elongation shall comply with the following minimum values:

Grade of steel	Thickness t, mm							
	t ≤ 5	5 ≥ t ≤ 10	10 ≥ t ≤ 15	15 ≥ t ≤ 20	20 ≥ t ≤ 25	25 ≥ t ≤ 30	30 ≥ t ≤ 40	40 ≥ t ≤ 50
A32 D32 E32 F32	14	16	17	18	19	20	21	22
A36 D36 E36 F36	13	15	16	17	18	19	20	21
A40 D40 E40 F40	12	14	15	16	17	18	19	20

9. Refer to 3.2.3 and 3.2.6 for impact tests.

10. For Grades A32 and A36 steels a relaxation in the number of impact tests for acceptance purposes may be permitted, provided that satisfactory results are obtained from occasional check tests.

The maximum values of the carbon equivalent or P_{cm} are subject to an agreement with the Register and shall be shown in the steel technical documentation being approved.

The actual values of C_{eq} or P_{cm} may be also shown in Manufacturer's and/or Register Certificates for steel being delivered.

The austenitic grain size of steel shall be not less than 5 (ASTM E 112, GOST 5639).

Table 3.2.2-3

Steel grades	Carbon equivalent, max, %	
	$t \le 50$	$50 < t \le 150$
A32, D32, E32, F32	0,36	0,38
A36, D36, E36, F36	0,38	0,40
A40, D40, E40, F40	0,40	0,42
Note. The value of the carbon equivalent shall be agreed upon between the Manufacturer and shipyard in each case.		

The following microstructure parameters shall be determined:

for normal and higher strength steels with ferrite-pearlite structure the grain size shall not be larger than 8 — 9 in accordance with GOST 5639 (0,015—0,022 mm), ferrite/pearlite banding shall be no more than size 2 in accordance with GOST 5640 (scale 3, row A);

for higher strength steels with ferrite-bainite structure the ferrite grain size shall not be larger, than 9 — 10 in accordance with GOST 5639 (0,011-0,015 mm), structure anisotropy factor shall not be more than 1; the proportion and size of bainite areas with lath morphology shall also be determined.

Structure assessment criteria shall comply with the above standards or shall be equivalent to them in accordance with the approved documentation of the manufacturer.

3.2.3 Mechanical properties.

The mechanical properties of normal strength steel shall comply with the requirements given in Table 3.2.2-1 while the mechanical properties of higher strength steel shall comply with Table 3.2.2-2.

The impact energy at impact testing may be determined either on longitudinal (KV_L) or transverse (KV_T) specimens.

The testing shall be performed in compliance with the requirements given in Section 2. Values for standard specimens (10 × 10 mm) are given in tables on impact test. When rolled steel products with a thickness under 10 mm are presented, one shall be guided by the provisions set forth in 2.2.3.1. In general, the impact tests of delivered steel shall be performed on longitudinal specimens only (test results on transverse specimens shall be guaranteed by the manufacturer), with the exception of cases stipulated by the customer or the Register.

Where the test results are unsatisfactory, retesting shall be conducted in compliance with 1.3.4.2.

Table 3.2.3

Steel grade	Temperature, °C	Average impact energy *KV*, min, J					
		$t \le 50$ mm		$50 < t \le 70$ mm		$70 < t \le 150$ mm	
		KV_L	KV_T	KV_L	KV_T	KV_L	KV_T
A32 D32 E32	0	31	22	38	26	46	31
	–20	31	22	38	26	46	31
	–40	31	22	38	26	46	31
A36 D36 E36	0	34	24	41	27	50	34
	–20	34	24	41	27	50	34
	–40	34	24	41	27	50	34
A40 D40 E40	0	39	26	46	31	55	37
	–20	39	26	46	31	55	37
	–40	39	26	46	31	55	37

3.2.4 Condition of supply.

The condition of steel supply shall meet the requirements of Tables 3.2.4-1 and 3.2.4-2 and shall be specified in a Manufacturer's Certificate.

Table 3.2.4-1

Condition of supply for normal strength steel[1]

Grade	Thickness, mm	Condition of supply
A	$t \le 50$	Any
	$50 < t \le 150$	Normalized (N), controlled rolled (CR) or thermo-mechanically rolled (TM)[2]
B	$t \le 50$	Any
	$50 < t \le 150$	Normalized (N), controlled rolled (CR) or thermo-mechanically rolled (TM)[2]
D	$t \le 50$	Any
	$50 < t \le 150$	Normalized (N), controlled rolled (CR) or thermo-mechanically rolled (TM)[3]
E	$t \le 150$	Normalized (N) or thermo-mechanically rolled (TM)[3]

[1] The scope of impact tests is specified according to Table 3.2.6.4-1.
[2] In case of the positive test results of the works' survey Grades A and B steel plates may be supplied in the as-rolled condition.
[3] Sections in Grade D steel may be supplied in the as rolled condition provided satisfactory results are consistently obtained from Charpy V-notch impact tests. Similarly sections in Grade E steel may be supplied in the as rolled or controlled rolled condition.

Table 3.2.4-2

Condition of supply for higher strength steel

Grade	Grain refining elements	Thickness, mm	Condition of supply
A32, A36	Nb and/or V	$t \le 12{,}5$	Any
		$12{,}5 < t \le 150$	Normalized (N), controlled rolled (CR) or thermo-mechanically rolled (TM)
A32, A36	Al or Al with Ti	$t \le 20$	Any
		$20 < t \le 35$	Any, subject to special approval if as rolled (AR)
		$35 < t \le 150$	Normalized (N), controlled rolled (CR) or thermo-mechanically rolled (TM)
A40	Any	$t \le 12{,}5$	Any
		$12{,}5 < t \le 50$	Normalized (N), controlled rolled (CR) or thermo-mechanically rolled (TM)
D32, D36	Nb and/or V	$t \le 12{,}5$	Any
		$12{,}5 < t \le 150$	Normalized (N), controlled rolled (CR) or thermo-mechanically rolled (TM)
D32, D36	Al or Al with Ti	$t \le 20$	Any
		$20 < t \le 25$	Any, subject to special approval if as rolled (AR)
		$25 < t \le 150$	Normalized (N), controlled rolled (CR) or thermo-mechanically rolled (TM)
D40	Any	$t \le 50$	Normalized (N), controlled rolled (CR) or thermo-mechanically rolled (TM)
E32, E36	Any	$t \le 50$	Normalized (N), controlled rolled (CR) or thermo-mechanically rolled (TM)
		$50 < t \le 150$	Normalized (N), thermo-mechanically rolled (TM)
E40	Any	$t \le 50$	Normalized (N), thermo-mechanically rolled (TM) or quenched and tempered (QT)

Note. Sections in Grades A32, A36, D32 and D36 steels may be supplied in as rolled condition, provided the results of impact tests are satisfactory. Similarly, sections in Grades E32 and E36 steels may be supplied in as rolled condition or after controlled rolling. The number of impact fests is determined according to 3.2.6.4-2.

3.2.5 Sampling.

Unless otherwise specified, the test samples shall be taken as follows:

the samples of plates and flats wider than 600 mm shall be taken from one end so that the sample axis is located midway between the longitudinal axis and the edge of the plate or flat (refer to Fig. 3.2.5-1);

the samples of flats 600 mm wide and less and of sections are taken from one end so that the sample axis lies 1/3 from the flat edge or from the outer edge of the section flange or, in the case of small sections, as near as possible to this position (refer to Figs. 3.2.5-2, 3.2.5-3 and 3.2.5-4);

in the case of channels, beams the test samples may be alternatively taken from the position 1/4 from the web centre line (refer to Fig. 3.2.5-3);

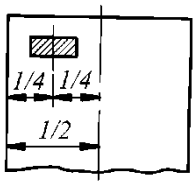

Fig. 3.2.5-1
Plate and flat

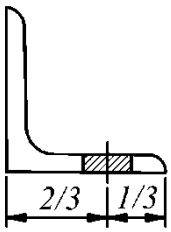

Fig. 3.2.5-2
Angle

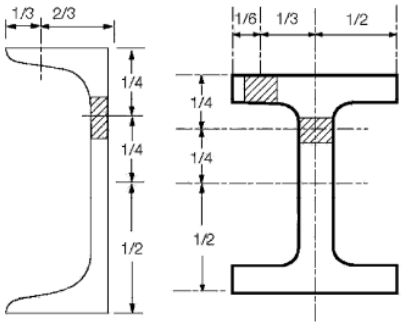

Fig. 3.2.5-3
Channel and beam

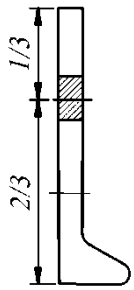

Fig. 3.2.5-4
Bulb bar

the samples of bars and similar semi-finished products are taken from one end so that the sample axis is parallel to the direction of rolling;

from rolled bars 50 to 150 m thick, samples are taken 1/4 of the thickness dimension from the surface.

Pieces of smaller cross-section may be tensile tested without prior machining. In other cases, the samples shall be taken so that their axes lie:

for non-cylindrical semi-finished products, 1/3 of the half-diagonal from the outside (refer to Fig. 3.2.5-5);

for cylindrical semi-finished products, 1/3 of the radius from the outside (refer to Fig. 3.2.5-6).

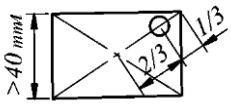

Fig. 3.2.5-5
Rectangular bar

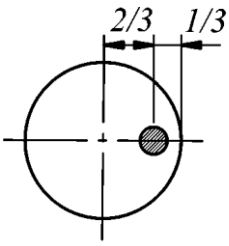

Fig. 3.2.5-6
Cylindrical bar

Pieces selected for the preparation of tensile and impact test specimens shall be the thickest (greatest in diameter) in each batch with their longitudinal axes transverse to the final direction of rolling, except in the case of sections, bars and flats of 600 mm or less in width.

Specimens, on which impact energy *KV* shall be determined, shall be prepared with their longitudinal axes either parallel or transverse to the final direction of rolling of the material unless required in special cases that the samples are taken with their longitudinal axes transverse to the final direction of rolling.

The notch shall be cut perpendicular to the rolled surface and not closer than 25 mm to the flame cut or sheared edge.

The impact test specimens shall be taken within 2 mm below the rolled surface and where the thickness of the rolled material exceeds 40 mm — within 1/4 of the thickness (the axis of the specimens shall be in a plane located at 1/4 of the thickness and parallel to the surface). The rolled products with thickness of 15 mm or less designed for operation at design temperatures below –30 °C shall be subject to tensile, bending and impact bending tests. The impact bending tests of the rolled products with thickness of less than 10 mm shall be performed on full-thickness test specimens (refer to 2.2.3.1).

3.2.6 Number of tests.

3.2.6.1 Rolled material is presented for tests in batches. A batch shall comprise rolled products of the same type, from the same cast and in the same condition of supply. Unless otherwise specified, one tensile test piece and one set of impact test pieces shall be tested from each batch presented with the mass not exceeding 50 t (except Grade E, E32, E36 and E40 steel).

Where the batch mass is in excess of 50 t, one extra tensile and impact test shall be made for each 50 t or fraction thereof.

An additional test shall be made for every variation of more than 10 mm in the thickness of plates or for every variation of more than 10 mm in the thickness or diameter of sections and bars comprising the batch.

Samples for testing rolled material batches shall be taken from the thickest semi-finished product belonging to the batch concerned.

If steel, except for Grade A, is over 50 mm in thickness and is supplied in the as rolled condition, the frequency of impact tests shall be increased to one set from each batch of 25 t or fraction thereof.

Similarly Grade A steel over 50 mm in thickness may be supplied in the as rolled condition. In such case one set of three Charpy V-notch test specimens shall be taken from each batch of 50 t or fraction thereof.

The piece selected for the preparation of the test specimens shall be the thickest in each batch.

3.2.6.2 When the Register approves the supply of the material in the as-rolled condition, one set of impact test specimens shall be tested from each batch of 25 t or fraction thereof.

3.2.6.3 The number of impact tests for Grade E, E32, E36 and E40 steel shall be as follows:

for plates and wide flats each piece shall be tested;

for sections and bars one set shall be tested from each batch of 25 t or fraction thereof.

When, sections other than Grades E40 and F40 are supplied in the as rolled or controlled rolled condition, one set of impact tests shall be taken from each batch of 15 t or fraction thereof.

Impact tests of the rolled materials after quenching and tempering (QT) shall be carried out on each length undergone such operation.

The number of impact tests of the rolled materials, which may be accepted for supply in hot-rolled condition, may be increased. The maximum size of the batch, from which a set of specimens is taken, shall be 25 t.

3.2.6.4 In general, the number of impact tests is given in Tables 3.2.6.4-1 and 3.2.6.4-2.

3.2.6.5 Where the ultrasonic testing shall be performed as required by conditions of supply, such a testing shall be carried out in accordance with the RS-agreed international or national standard.

The ultrasonic testing is the responsibility of the manufacturer. Technical supervision during the testing shall not absolve the manufacturer from this responsibility.

Table 3.2.6.4-1

Grade	Deoxidation	Type of rolled products	Condition of supply (batch size for tests, KV) Thickness, mm 10 12,5 20 25 30 35 40 50 150			
A	Killed or semi-killed	Section	A(-)	Not applicable		
	<50 killed or semi-killed >50 killed	Plate	A(-)			N(-) TM(-) CR(50), AR*(50)
		Section	A(-)			Not applicable
B	<50 killed or semi-killed ≥50 killed	Plate	A(-)	A(50)		N(50) TM(50) CR(25) AR*(25)
		Section	A(-)	A(50)		Not applicable
D	Killed	Plate Section	A(50)	Not applicable		
	Killed and fine-grained	Plate	A(50)		N(50)	N(50)
					CR(50)	TM(50)
					TM(50)	CR(25)
		Section	A(50)		N(50)	Not applicable
					CR(50)	
					TM(50)	
					AR*(25)	
E	Killed and fine-grained	Plate	N (each piece)			
			TM (each piece)			
		Section	N(25)TM(25)			Not applicable
			AR*(15),			
			CR*(15)			

Symbols: A — any; N — normalizing; CR — controlled rolling; QT — quenching and tempering.
Note. AR* as-rolled steel and CR* controlled rolling specified in the present table and in Table 3.2.6.4-2 may be applied in case of the positive test results of the works' survey.

Table 3.2.6.4-2

Steel grade	Deoxidation	Grain refining elements	Type of rolled products	Condition of supply (batch size for tests, KV) Thickness, mm 10 12,5 20 25 30 35 40 50 150			
A32, A36	Killed and fine-grained	Nb and/or V	Plate	A(50)	N(50) CR(50), TM(50)		N(50), CR(25), TM(50)
			Section	A(50)	N(50) CR(50), TM(50) AR*(25)		Not applicable
		Al or Al+Ti	Plate	A(50)	AR*(25)	Not applicable	
					N(50), CR(50) TM(50)		N(50), CR(25), TM(50)
			Section	A(50)	N(50) CR(50) TM(50) AR*(50)		Not applicable
A40	Killed and fine-grained	Any	Plate	A(50)	N(50) CR(50) TM(50)		N(50) TM(50) QT(each length as heat treated)
			Section	A(50)	N(50) CR(50) TM(50)		Not applicable

<table>
<tr><th rowspan="3">Steel grade</th><th rowspan="3">Deoxidation</th><th rowspan="3">Grain refining elements</th><th rowspan="3">Type of rolled products</th><th colspan="8">Condition of supply (batch size for tests, KV)</th></tr>
<tr><th colspan="8">Thickness, mm</th></tr>
<tr><th>10</th><th>12,5</th><th>20</th><th>25</th><th>30</th><th>35</th><th>40</th><th>50</th><th>150</th></tr>
<tr><td rowspan="5">D32, D36</td><td rowspan="5">Killed and fine-grained</td><td rowspan="2">Nb or V</td><td>Plate</td><td>A(50)</td><td colspan="6">N(50)
CR(50)
TM(50)</td><td>N(50), CR(25), TM(50)</td></tr>
<tr><td>Section</td><td>A(50)</td><td colspan="6">N(50)
CR(50), TM(50)
AR*(25)</td><td>Not applicable</td></tr>
<tr><td rowspan="3">Al or Al+Ti</td><td rowspan="2">Plate</td><td colspan="2" rowspan="2">A(50)</td><td>AR*(25)</td><td colspan="5">Not applicable</td></tr>
<tr><td colspan="5">N(50),
CR(50),
TM(50)</td><td>N(50), CR(25), TM(50)</td></tr>
<tr><td>Section</td><td colspan="2">A(50)</td><td colspan="5">N(50)
CR(50), TM(50) AR*(25)</td><td>Not applicable</td></tr>
<tr><td rowspan="2">D40</td><td rowspan="2">Killed and fine-grained</td><td rowspan="2">Any</td><td>Plate</td><td colspan="7">N(50)
CR(50)
TM(50)</td><td>N(50)
TM(50)
QT (each length as heat treated)</td></tr>
<tr><td>Section</td><td colspan="7">N(50)
CR(50)
TM(50)</td><td>Not applicable</td></tr>
<tr><td rowspan="2">E32, E36</td><td rowspan="2">Killed and fine-grained</td><td rowspan="2">Any</td><td>Plate</td><td colspan="8">N (each piece)
TM (each piece)</td></tr>
<tr><td>Section</td><td colspan="4">N(25)
TM(25)
AR*(15), CR*(15)</td><td colspan="4">Not applicable</td></tr>
<tr><td rowspan="2">E40</td><td rowspan="2">Killed and fine-grained</td><td rowspan="2">Any</td><td>Plate</td><td colspan="4">N (each piece)
TM (each piece)
QT (each length as heat treated)</td><td colspan="4">N (each piece)
TM (each piece)
QT (each length as heat treated)</td></tr>
<tr><td>Section</td><td colspan="4">N(25)
TM(25)
QT(25)</td><td colspan="4">Not applicable</td></tr>
<tr><td rowspan="2">F32, F36</td><td rowspan="2">Killed and fine-grained</td><td rowspan="2">Any</td><td>Plate</td><td colspan="4">N (each piece)
TM (each piece)
QT (each length as heat treated)</td><td colspan="4">N (each piece)
TM(each piece)
QT (each length as heat treated)</td></tr>
<tr><td>Section</td><td colspan="4">N(25)
TM(25)
QT(25)
CR*(15)</td><td colspan="4">Not applicable</td></tr>
<tr><td rowspan="2">F40</td><td rowspan="2">Killed and fine-grained</td><td rowspan="2">Any</td><td>Plate</td><td colspan="4">N (each piece)
TM (each piece)
QT (each length as heat treated)</td><td colspan="4">N (each piece)
TM (each piece)
QT (each length as heat treated)</td></tr>
<tr><td>Section</td><td colspan="4">N(25)
TM(25)
QT(25)</td><td colspan="4">Not applicable</td></tr>
</table>

3.2.7 Surface quality.

3.2.7.1 The steel shall be free from surface defects prejudicial to the use of the material for the intended application.

The requirements specified below do not apply to steel products in forms of bars and tubulars.

Unless otherwise specified, the finished rolled product shall have a surface quality in accordance with agreed standards such as EN 10163.

3.2.7.2 The responsibility for meeting the surface quality of the rolled products with the requirements of the RS-agreed standards rests with the manufacturer. The quality system of the

firm (manufacturer) shall provide for a required scope of surface finish inspection prior to delivery to the customer. Where a material is found to be defective at final production stages, the repair may be performed according to the RS-approved documentation.

3.2.7.2.1 The surface quality of the rolled product shall be inspected in accordance with international or national standards agreed between the customer and manufacturer and the Register.

3.2.7.2.2 If agreed by the manufacturer and customer, steel may be supplied with improved surface finish than specified in this Part of the Rules.

3.2.7.3 The acceptance criteria.

3.2.7.3.1 Minor defects, for example, pitting, rolled-in scale, roll marks, scratches and grooves, regarded as being inherent of the manufacturing process are permissible irrespective of their number, provided the permissible depth and area limits of class A of EN 10163-2 standard or equivalent RS-agreed international or national standard are complied with. In this case, the average thickness of rolled steel plate and flats shall be not less than the nominal one according to 3.2.8. Total affected area with minor defects with a remaining thickness under the defect less than a minimum established tolerance but within the limits of those set in Table 1 of EN 10163-2 standard or equivalent ones, shall not exceed 15 % of total product surface.

3.2.7.3.2 Imperfections with a depth exceeding the limits specified in Table 2 of Class A of EN 10163-2 standard or equivalent RS-agreed international or national standard, shall be repaired irrespective of their number.

Cracks, fissures, injurious surface flaws, laminated dirt, delaminations and seams (laminated imperfections), and other defects, visually evident on surface or edge of the rolled product, are considered to impair the end use of the product and shall be repaired irrespective of their dimensions and number or the rolled product shall be discarded.

3.2.7.4 Repair of defects specified in 3.2.7.3.2.

3.2.7.4.1 Grinding may be applied provided the following conditions are met:

.1 surface defects may be eliminated by local grinding to the depth not exceeding 7 % of nominal thickness but not more than 3 mm in any case;

.2 each single ground area shall not exceed 0,25 m^2;

.3 sum of all ground areas shall not exceed 2 % of the total surface in question;

.4 defects lying in a distance less than their average breadth to each other shall be regarded as one single area;

.5 grinding depth for defects lying opposite each other on back surfaces shall not exceed the values specified in 3.2.7.4.1.1.

During defect elimination and repair of rolled products, average thickness shall remain within the tolerance complying with the requirements of 3.2.8. The ground areas shall be a smooth transition to the surrounding surface of the product. Complete elimination of the defect shall be verified by magnetic particle or by liquid penetrant testing.

3.2.7.4.2 Welding repair.

Welding repair procedures and methods for surface defects shall be submitted to the Register for approval. Repair of defects by welding in accordance with 3.2.7.3.2 shall be followed by magnetic particle or liquid penetrant testing.

Local defects which cannot be eliminated in accordance with 3.2.7.4.1 may be repaired by welding upon agreement with the Register subject to the following conditions:

.1 any single welded area shall not exceed 0,125 m^2 and the sum of all areas shall not exceed 2 % of the surface side in question;

.2 distance between welded areas shall not be less than their average width;

.3 weld preparation shall not reduce the thickness of the product by more than 20 % of the nominal thickness;

.4 when the depth of the welded defect is equal to or exceeds 3 mm, ultrasonic testing shall be carried out in accordance with the RS-approved procedure;

.5 welding shall be carried out by qualified welders using an approved procedure and electrodes. Welding consumables with controllable hydrogen content in the deposited metal shall be stored and calcinated prior to use in compliance with the manufacturer's recommendations.

3.2.8 Thickness tolerances of steel plates and wide flats.

3.2.8.1 Application.

These requirements apply to the tolerance on thickness of steel plates and wide flats with widths of 600 mm or greater with thicknesses of 5 mm and over, covering the following steel grades:

.1 normal and higher strength hull structural steels according to 3.2;

.2 high strength hull structural steels according to 3.13;

.3 steels for machinery structures.

The thickness tolerances for steel plates and wide flats below 5 mm may be taken from national or international standards, equivalent to Class B (ISO 7452). In this case, minus tolerance shall not exceed 0,3 mm.

These requirements do not apply to rolled steel products intended for the constructions of boilers, heat exchangers, pressure vessels, etc., as well as independent tanks for the transportation of liquefied gases or chemicals.

Class C (ISO 7452-2013) or equivalent according to national or international standards may be applied in lieu of 3.2.8.3, in which case the requirements in 3.2.8.4 and 3.2.8.5 need not be applied.

If Class C (ISO 7452-2013) is applied, the footnote Table 2 part of which reads: "Also a minus side of thickness of 0,3 mm is permitted.", is not applicable.

Additionally, if ISO 7452-2013 is applied, it is required that the steel mill demonstrate to the satisfaction of the Register that the number of measurements and measurement distribution is appropriate to establish that the mother plates produced are at or above the specified nominal thickness.

3.2.8.2 Responsibility.

The responsibility for verification and maintenance of the production within the required tolerances rests with the manufacturer. The surveyor to the Register may require to witness some measurements.

The responsibility for storage and maintenance of the delivered product(s) with acceptable level of surface conditions rests with the shipyard before the products are used in fabrication.

3.2.8.3 Thickness tolerances.

The tolerances on thickness of a given product are defined as:

.1 minus tolerance is the lower limit of the acceptable range below the nominal thickness;

.2 plus tolerance is the upper limit of the acceptable range above the nominal thickness.

N o t e . Nominal thickness is defined by the purchaser at the time of enquiry and order.

The minus tolerance on thickness of steel rolled products of normal and higher strength according to 3.2, of high strength according to 3.13, as well as steels supplied in accordance with the requirements of 3.14 and Part XII "Materials" of the Rules for the Classification, Construction and Equipment of Mobile Offshore Drilling Units and Fixed Offshore Platforms shall be 0,3 mm or less irrespective of nominal thickness.

The minus tolerances for products for machinery structures shall be in accordance with Table 3.2.8.3.

Table 3.2.8.3

Nominal thickness t, mm	Tolerance, mm
$3 \le t < 5$	–0,3
$5 \le t < 8$	–0,4
$8 \le t < 15$	–0,5
$15 \le t < 25$	–0,6
$25 \le t < 40$	–0,7
$40 \le t < 80$	–0,9
$80 \le t < 150$	–1,1
$150 \le t < 250$	–1,2
$250 \le t$	–1,3

The tolerances on nominal thickness are not applicable to areas repaired by grinding. For such areas the requirements of 3.2.7.4 may be applied unless stricter requirements as per an agreed standard are considered by the Register or purchaser.

The plus tolerances on nominal thickness shall be in accordance with an agreed national or international standard unless required otherwise by the Register or purchaser.

3.2.8.4 Average thickness.

The average thickness of a product or products is defined as the arithmetic mean of the measurements made in accordance with 3.2.8.5.

The average thickness of steel rolled products of normal and higher strength according to 3.2, of high strength according to 3.13, as well as steels supplied in accordance with the requirements of 3.14 and Part XII "Materials" of the Rules for the Classification, Construction and Equipment of Mobile Offshore Drilling Units and Fixed Offshore Platforms shall not be less than the nominal thickness.

3.2.8.5 Thickness measurements.

The thickness is to be measured at locations of a product or products as defined in Figs. 3.2.8.5.1-1 and 3.2.8.5.1-2.

Automated method or manual method is applied to the thickness measurements.

The procedure and the records of measurements shall be made available to the surveyor to the Register and copies provided on request.

3.2.8.5.1 Average thickness measuring locations.

At least two lines among shown in Figs. 3.2.8.5.1-1 and 3.2.8.5.1-2, shall be selected for the thickness measurements and at least three points on each selected line shall be selected for thickness measurement. If more than three points are taken on each line the number of points shall be equal on each line.

Note. The measurement locations apply to a product rolled directly from one slab or steel ingot even if the product shall be later cut by the manufacturer. Examples of the original measurements relative to later cut products are shown in Fig. 3.2.5.8.1-2. It shall be noted that the examples shown are not representative of all possible cutting scenarios.

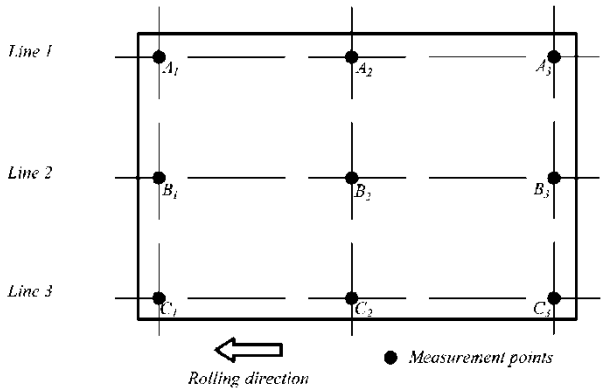

Fig. 3.2.8.5.1-1
Locations of thickness measuring points for the original steel plates

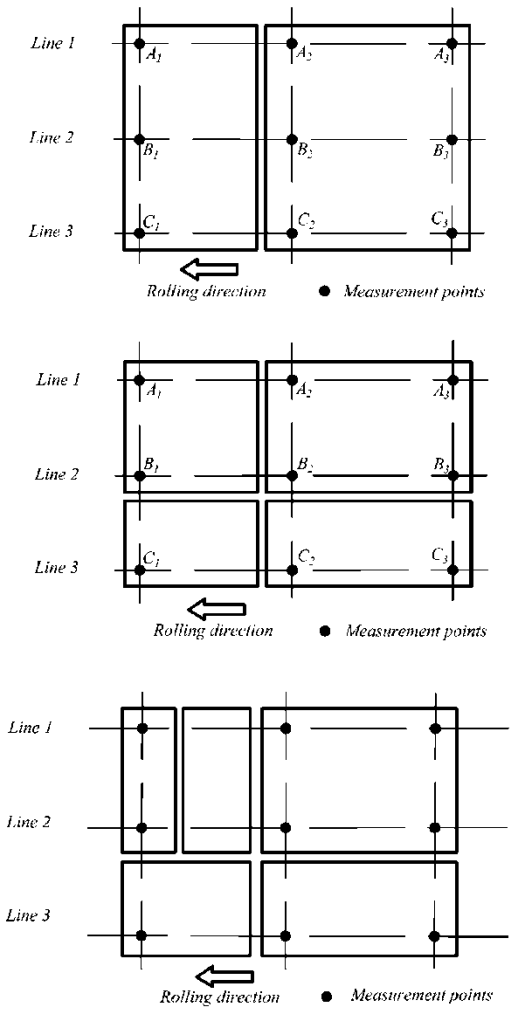

Fig. 3.2.8.5.1-2
Locations of thickness measuring points for the cut steel products

For automated methods, the measuring points at sides shall be located not less than 10 mm but not greater than 300 mm from the transverse or longitudinal edges of the product.

For manual methods, the measuring points at sides shall be located not less than 10 mm but not greater than 100 mm from the transverse or longitudinal edges of the product.

3.2.9 Marking and documentation.

3.2.9.1 Identification, marking and issued documentation — in accordance with the requirements of 1.4.

3.2.9.2 Every plate and strip semi-finished product shall have clearly visible brand of the Register marked by the specified method and in specified location.

3.2.9.2.1 The marking shall include the unified indication mark for grade of steel and strength level (e.g., A, B36, E550).

3.2.9.2.2 When required by the Register or the customer, material shall have index indicating the condition of supply (e.g. E36TM, E690QT).

3.2.9.2.3 The steel, supplied under the Register technical supervision may have index "PC" before the unified identification mark for grade of steel and strength level (e.g., PCE36TM).

3.2.9.2.4 Steel complying with the requirements of 3.5.3 for ductility and cold resistance shall have an index "Arc" with the value of design temperature of the material without the minus symbol (for example, PCF36Arc40, PCD500Arc30) after the unified identification mark for grade of steel and strength level.

3.2.9.2.5 Steel complying with the requirements of 3.14 shall have an index "Z" with relevant level value of Z-properties added to unified identification mark for grade of steel and strength level (PCD40Z35).

3.2.9.2.6 Steel complying with the requirements of 2.2.3, Part III "Technical Supervision during Manufacture of Materials" of the Rules for Technical Supervision during Construction of Ships and Manufacture of Materials and Products for Ships shall have index "W" after the unified identification mark for grade of steel and strength level. A reference note of the maximum heat output used in the production of test specimens may be added after the indicated index (for example, PCF500W, PCD460W300).

3.2.9.2.7 In case of the Register approved supply of steel, which does not fully comply with the requirements of the Rules (refer to 3.2.1.1) for chemical composition, index "S" may be added after the identification mark for grade of steel and strength level (e.g., PCE368TM or PCB368).

3.3 STEEL FOR BOILERS, HEAT EXCHANGERS AND PRESSURE VESSELS

3.3.1 General.

3.3.1.1 The present requirements are applicable to rolled steel for marine boilers, heat exchangers and pressure vessels under the survey by the Register.

3.3.1.2 The steel manufactured in accordance with national and international standards or other technical documentation shall meet the requirements of this Chapter.

3.3.1.3 Rolled steel which is manufactured and tested in accordance with these requirements is intended for operation at room or elevated temperatures.

3.3.2 Chemical composition.

3.3.2.1 The chemical composition of steel shall be in accordance with standards proceeding from the required mechanical properties at room or elevated design temperatures and the content of base elements in % shall not exceed:

for carbon and carbon-manganese steels (ladle analysis), %:

carbon — 0,20, phosphorus and sulphur — 0,04, silicon — 0,50, manganese — 1,60, chromium, nickel, copper — 0,30.

The use of steel with carbon content more than 0,20 % for welded structures shall be agreed with the Register on condition sufficient weldability is ensured;

for low-alloy steel (ladle analysis), %:

carbon — 0,18, phosphorus — 0,04, silicon — 0,50, chromium — 2,50, manganese — 0,80, molybdenum — 1,10, sulphur — 0,04, vanadium — 0,35.

3.3.2.2 The steel shall be killed. Using of rimming steel is not permitted and using of semi-killed steel is not recommended and shall be justified and approved by the customer.

Carbon and carbon-manganese steel intended to operate at temperatures over 400 °C shall not contain aluminium.

3.3.2.3 On agreement with the customer using of steel complying with national and RS-agreed international standards.

3.3.3 Mechanical properties.

The mechanical properties of steel at room and elevated temperature shall be in accordance with standards.

The properties of steel shall be confirmed by the following tests if they are provided in agreed standards:

tensile test (tensile strength, yield stress and elongation are determined);

bend test;

impact test (*KCU* or *KV*).

The tensile test at elevated temperature and the ageing test shall be carried out if required by the relevant parts of the Rules or by standards.

The values of long-term stress-rupture strength of metal shall be submitted to the Register.

3.3.4 Heat treatment.

The steel shall be manufactured as normalized, normalized and tempered or quenched and tempered. The method of heat treatment shall be as stipulated by standards.

Provided the required properties are ensured and confirmed by tests and statistical data, steel may be manufactured without heat treatment, and controlled temperature rolling may be accepted as a substitute for normalizing.

3.3.5 Sampling.

Unless stated otherwise, sampling shall be carried out in accordance with 3.2.5.

Tensile test specimens and those for determining the impact toughness *KCU* shall be cut out transverse to, and those for determining the impact energy *KV* — parallel to the direction of the last rolling.

3.3.6 Number of tests.

Each rolled steel plate shall be submitted for testing. In the case of rolled plates of carbon steel up to 12 mm thick, as well as rolled sections, it is permitted to take 10 % of the total number

of the plates (rolled pieces) or sections for testing purposes, but not less than two and of the same thickness (diameter or shape), one and the same cast and identical heat treatment.

Unless stated otherwise, not less than one specimen for tensile and bend testing and not less than one set of specimens for impact testing shall be taken from the rolled piece intended for testing purposes.

From plates (rolled pieces) with a mass of more than 6 t or a length of more than 15 m the samples for test specimens shall be cut out on both ends.

3.3.7 Inspection.

The rolled steel shall be free from defects prejudicial to the use of the material for the intended application. Freedom from non-allowable defects shall be guaranteed by the manufacturer and may be confirmed by the results of non-destructive testing.

Surface defects involved by the manufacturing process are permitted in case their depth is not greater than the allowable under-thickness tolerances, considering from the nominal thickness.

Repair of surface defects by welding followed by post-weld heat treatment is permitted using the technology approved by the Register.

3.3.8 Marking and documentation.

Identification, marking and issued documentation — in accordance with the requirements of 1.4.

Every semi-finished product shall have clearly visible stamp or brand of the Register marked by the specified method and in specified location.

Branding of rolled and section rolled steel products may be performed on a label. At that the manufacturer shall confirm the identification system of every rolled product in a bundle.

3.4 STEEL STRUCTURAL TUBES

3.4.1 General.

3.4.1.1 The present requirements apply to hot- and cold-formed steel tubes and welded tubes intended for manufacture of hull structures subject to survey by the Register.

3.4.1.2 Steel structural tubes shall comply with the requirements of this Chapter and be manufactured in accordance with international and national standards or technical documentation approved by the Register.

3.4.1.3 Steel structural tubes shall be manufactured at works recognized in accordance with the requirements of 1.3.1.2 by the procedure approved by the Register.

If rolled steel products used for manufacture of welded tubes are produced at separate works, the steel rolled products manufacturer shall also be recognized by the Register in accordance with the requirements of 1.3.1.2.

3.4.1.4 Requirements of 3.2, 3.5, 3.13 and 3.14 for relevant steel grades shall apply to the steel of structural tubes.

3.4.1.4.1 For welded tubes, the requirements of 3.4.1.4 apply only to rolled plates used for their manufacture. At that the manufactured tube shall be subject to testing required by international or national standard or technical documentation approved by the Register.

3.4.1.4.2 Hot- and cold-formed steel tubes are tested in the same scope as the rolled products for welded tubes in accordance with 3.4.1.4.

3.4.1.5 Requirements for corrosion resistant steel products are specified in 3.16.

3.4.1.6 In case of technical reasons preventing the fulfillment of testing required by the Rules of the Register, repair, inspection etc., replacement is permitted after being confirmed by the Register as equivalent.

3.4.2 Inspection and non-destructive testing.

3.4.2.1 All the tubes shall undergo visual testing.

3.4.2.2 Quality of surface and defects grinding of surface of manufactured tubes shall comply with the requirements of 3.2.7.

3.4.2.3 Thickness tolerances of manufactured tubes shall comply with the requirements of 3.2.8.

3.4.2.4 All welds of welded tubes shall undergo non-destructive testing.

3.4.3 Marking and documentation.

3.4.3.1 Identification, marking and issued documentation shall be in accordance with the requirements of 3.2.9.

3.4.3.2 Branding of tubes may be performed on a label. At that the manufacturer shall confirm the identification system of every tube in a bundle.

3.5 STEEL FOR STRUCTURES USED AT LOW TEMPERATURES

3.5.1 General.

3.5.1.1 The present requirements apply to the following materials used in structures and machinery of ships and MODU/FOP:

Grade F higher strength steel plates, strips, sections and bars;

steel plates, strip, sections and bars of higher and high strength with index "Arc";

forgings and castings with confirmed cold resistance properties at the required sub-zero temperature.

3.5.1.2 The general requirements for rolled products depending on the strength level specified and operation conditions including manufacture, inspection, identification, marking and documentation for rolled products, are given in 3.2, 3.13, 3.14 and 3.17.

The general requirements for manufacture, inspection, identification, marking and documentation for forgings and castings are specified in 3.7 and 3.8 accordingly. Requirements for non-destructive testing of forgings and castings are specified in 2.5, Part III "Technical Supervision during Manufacture of Materials" of the Rules for Technical Supervision during Construction of Ships and Manufacture of Materials and Products for Ships.

Additional requirements for Grade F steel rolled products of higher strength are given in 3.5.2.

Additional requirements for steels with index "Arc" are given in 3.5.3.

Additional requirements for rolled products with thickness of 15 mm and less are given in 3.5.4.

Additional requirements for forgings and castings with confirmed cold resistance properties at required sub-zero temperature are given in 3.5.5 and 3.5.6, accordingly.

3.5.1.3 The rolled products, forgings and castings shall be manufactured by the firms recognized by the Register in accordance with 1.3.

3.5.1.4 Steel other than specified in this Chapter as to the chemical composition, mechanical properties and condition of supply may be allowed for use in compliance with the national and international standards recognized by the Register.

3.5.1.5 Where provision is made for welding during the manufacture of forged or cast items, or where such items are intended for welding inside the ship's hull, the chemical composition of steel and the welding procedure shall ensure the welded joint resistance to cracking.

The mechanical properties and impact energy of weld metal at the specified temperature at impact test shall be not lower than those required for the base metal.

3.5.1.6 Steel rolled products in plates, strips, sections, as well as steel forgings and castings for hull structural members, equipment and machinery subjected to long-term exposure to low temperatures are selected with due regard for the set value of the structure design temperature and/or the structural member category.

3.5.1.7 For manufacture of hull structural members of ships and MODU/FOP, with thicknesses beyond the scope of those specified by the Rules, as well as members subjected to long-term exposure to low temperatures and multi-cycle loads it is recommended to apply steel with index "Arc" complying with the requirements of 3.5.3 with T_d meeting the design temperature of structural member T_D.

3.5.1.8 Steel is tested in accordance with the requirements of Section 2 with the use of the Register approved programs.

3.5.2 Hull structural Grade F higher strength steel.

3.5.2.1 General.

The present requirements apply to Grade F higher strength steel plates, strips, sections and bars.

In cases specified in other parts of the Rules for Grade F steel rolled products of higher strength, additional requirements may be applied.

The general requirements for Grade F higher strength steel are given in 3.13.

3.5.2.2 The rate of plastic deformation in rolling shall be 5:1 as a minimum.

3.5.2.3 Chemical composition and structure.

The content of chemical elements in the composition shall not extend beyond the extreme values given in Table 3.5.2.3. The steel shall be fully killed and treated with grain-refining elements.

3.5.2.3.1 The following microstructure parameters shall comply with the following requirements:

.1 for higher strength steels with ferrite-pearlite structure

.1.1 the grain size shall not be larger than 8 in accordance with GOST 5639-82;

.1.2 ferrite/pearlite banding shall be no more than size 2 in accordance with GOST 5640-68 (scale 3, row A);

.2 for higher strength steels with ferrite-bainite structure:

.2.1 the ferrite grain size shall not be larger than 9 in accordance with GOST 5639-82;

.2.2 structure anisotropy factor shall not be more than 1;

.2.3 the portion and size of bainite areas with lath morphology shall also be determined;

.3 for strengthened bainite-martensite steels the austenite grain size shall not be larger than 6 in accordance with GOST 5639-82.

Structure assessment criteria shall comply with the above standards or shall be equivalent to them (for example, ASTM E112-13).

3.5.2.4 Mechanical properties.

The mechanical properties of Grades F32, F36 and F40 steels during tensile test and impact test shall meet the requirements of Table 3.5.2.4. Additionally to the requirements of 3.2.5, tests for determining impact energy in the specimens cut out from the plate midthickness are carried out for steel over 40 mm thick. In this case the test results shall also meet the requirements of Table 3.5.2.4.

3.5.2.5 Condition of supply.

Condition of steel supply for Grades F32, F36 and F40 — according to the requirements of Table 3.2.6.4-2.

Table 3.5.2.3

Chemical composition of hull structural steel

Steel grade	Content of elements, %													
	C	Mn	Si	P	S	Al, (acidsoluble), min	Nb	V	Ti	Cu	Cr	Ni	Mo	N
	max		max				max							
F32	0,16	0,90 — 1,60	0,50	0,025	0,025	0,015	0,02 — 0,05	0,05 — 0,10	0,02	0,35	0,20	0,80	0,08	0,009 (0,012 — if Al is present)
F36	0,16	0,90 — 1,60	0,50	0,025	0,025	0,015	0,02 — 0,05	0,05 — 0,10	0,02	0,35	0,20	0,80	0,08	
F40	0,16	0,90 — 1,60	0,50	0,025	0,025	0,015	0,02 — 0,05	0,05 — 0,10	0,02	0,35	0,20	0,80	0,08	
							Total content 0,12 % max							
Note . Refer to Notes 1 — 7 in Table 3.2.2-2.														

Table 3.5.2.4

Mechanical properties of F grade higher strength steel

Grade	Yield stress R_{eH},, min, MPs	Tensile strength R_m, MPa	Elongation A_5, min, %	Impact test						
				Test temperature, °C	Average impact energy value KV, min, J					
					$t \le 50$ mm		$50 < t \le 70$ mm		$70 < t$ mm	
					KV_L	KV_T	KV_L	KV_T	KV_L	KV_T
F32	315	440 – 570	22	–60	31	22	38	26	46	31
F36	355	490 – 630	21	–60	34	24	41	27	50	34
F40	390	510 – 660	20	–60	39	26	46	31	55	37
Note. Refer to Notes 8 and 9 in Table 3.2.2-2.										

3.5.3 Hull structural steel with index "Arc".

3.5.3.1 General.

3.5.3.1.1 "Arc" is the symbol added to the designation of steel grade for which additional tests were performed according to the Register programs to determine ductility and cold resistance properties (refer to 2.2.10, 3.5.3.3 — 3.5.3.3.5) meeting the relevant requirements for Z-properties not less than 35 % according to the requirements of 3.14. The minimum material service/operating temperature T_d (without the minus symbol) down to which the steel may be used for any structural members without limitations shall be indicated next to the symbol. Example of designation: PCF40Arc30. The firm recognized as manufacturer of steel with index "Arc" may deliver rolled products with this index and temperature values in the range of –10°C up to T_d.

3.5.3.1.2 The rate of plastic deformation in rolling shall be 5:1 as a minimum.

3.5.3.2 Chemical composition and structure.

3.5.3.2.1 The chemical composition of higher strength steel marked with index "Arc" shall meet the relevant requirements of Table 3.5.3.2.1. Unless otherwise specified, chemical composition of high strength steel with index "Arc" shall comply with the requirements in Table 3.13.3.1. For higher strength steels, deviations in the content of individual chemical elements are allowed, including carbon equivalent C_{eq} and crack resistance parameter P_{cm} specified by the necessity to meet the requirements for cold resistance.

Table 3.5.3.2.1

Chemical composition of higher strength steel with index "Arc"

Grade	PCA32Arc PCD32Arc PCE32Arc PCF32Arc	PCA36Arc PCD36Arc PCE36Arc PCF36Arc	PCA40Arc PCD40Arc PCE40Arc PCF40Arc
Deoxidation	Killed, fine grain treated		
C max	0,12		
Si max	0,50		
Mn	0,60-1,60		
P max	0,015		
S max	0,008		
Cu max	0,35		
Cr max	–		
Ni max	0,40 (0,80 — for F Grade steel)		
Mo max	0,08		
$Al_{ac..sol}$, max	0,055		
Al_{total}, max	0,06		
Nb max	0,05		
V max	0,10		
Ti max	0,05		
N max	0,009		
Sn max	0,02		
Sb max	0,10		
Pb max	0,005		
As max	0,02		
Bi max	0,005		
B max	0,0005		
P_{cm}* max	0,22 for low-carbon and manganese steels		
$P_{cm} = C + \frac{Si}{30} + \frac{Mn + Cu + Cr}{20} + \frac{Ni}{60} + \frac{Mo}{15} + \frac{V}{10} + 5 \cdot B$			

3.5.3.2.2 The higher strength steel shall be killed and fine grain treated. Vacuum degassing shall be applied during manufacture of higher strength steel. In steel with index "Arc" the carbon content shall not exceed 0,12 %, sulphur content shall not exceed 0,005 %, the phosphorus content — 0,010 %, the nitrogen content — 0,008 %, the oxygen content — 30 ppm, the hydrogen content — 2,5 ppm. The nitrogen content may be up to 0,012 % provided that Al/N < 2. Where the nitrogen content is in the range from 0,009 up to 0,012 inclusive, the additional ageing tests shall be carried out.

3.5.3.2.3 In thermo-mechanically rolled (TM) and controlled rolled (CR) stock of higher and

high strength steels of 420, 460 and 500 grades, the carbon content may be reduced to 0,05 %, therewith, the carbon content may be 0,10 % maximum.

3.5.3.2.4 Structure condition shall comply with the requirements of 3.5.2.3.1.

3.5.3.3 Mechanical properties

3.5.3.3.1 The mechanical properties of steel shall comply with the requirements for the steel of a relevant grade according to 3.2, 3.5.2 and 3.13 for relevant strength level and 3.14 for level of Z-properties of 35 %. Value of impact energy during impact tests shall comply with the requirements of Table 3.5.3.3.1.

Table 3.5.3.3.1

Values of impact energy for higher and high strength steels with index "Arc" at impact test

Grade	Impact test temperature, °C	Mean value of impact energy, KV_T, J, min	Impact energy, KV_T, J, per one specimen, min
PCA32Arc	0	50	35
PCD32Arc	–20		
PCE32Arc	–40		
PCF32Arc	–60		
PCA36Arc	0		
PCD36Arc	–20		
PCE36Arc	–40		
PCF36Arc	–60		
PCA40Arc	0		
PCD40Arc	–20		
PCE40Arc	–40		
PCF40Arc	–60		
PCA420Arc	0	80	56
PCD420Arc	–20		
PCE420Arc	–40		
PCF420Arc	–60		
PCA500Arc	0		
PCD500Arc	–20		
PCE500Arc	–40		
PCF500Arc	–60		
PCA550Arc	0		
PCD550Arc	–20		
PCE550Arc	–40		
PCF550Arc	–60		
PCA620Arc	0		
PCD620Arc	–20		
PCE620Arc	–40		
PCF620Arc	–60		
PCA690Arc	0		
PCD690Arc	–20		
PCE690Arc	–40		
PCF690Arc	–60		

In this case, the test program during the initial survey of manufacture by the Register in accordance with 1.3.1.2 in order to determine the possibility of adding index "Arc" to a steel grade includes the following:

.1 determining the temperature of a ductile-brittle transition to estimate the material property with regard to retarding the spread of brittle failure (T_{kb}, *NDT*, *DWTT*):

tests for determining the temperature T_{kb} are carried out according to 2.2.10.2 for rolled plates with thickness of 10 mm and more;

tests for determining the temperature *NDT* are carried out according to 2.2.10.3 for rolled plates with thickness of 16 mm and more;

tests for determining the temperature *DWTT* are carried out according to 2.2.10.4 for rolled plates with thickness between 10 mm and 40 mm;

.2 determining the crack resistance parameter *CTOD* for the base metal and HAZ metal in

testing the specimens cut from butt-welded joints in accordance with 2.2.10.5 for rolled plates with thickness of 16 mm and more.

Tests of steel with index "Arc" to determine T_d temperature, as a rule, are carried out in the temperature interval including T_D temperature. The value of T_d is determined with 10 °C interval. Where one procedure for steel manufacture is concerned (smelting, rolling, condition of supply), the results of the above tests obtained with the thickest rolled products may be extended to the rolling products with thicknesses smaller by 40 %, of all lower grades and strength levels where chemical composition, production technology and technology of heat treatment are identical to the tested material. At that, if, according to the calculations, the spread reaches the thickness of 10 mm and less, the minimum thickness approved by the Register shall be ≥ 10 mm.

3.5.3.3.2 The average value of *CTOD* for base metal shall be not less than that specified in Table 3.5.3.3.2 with the minimum value at least 0,7 of the required one. Tests are carried out in accordance with the requirements of Section 2 by RS-approved programs.

The lowest test temperature at which requirements specified in Table 3.5.3.3.2 are met, is assumed to be the minimum temperature $T_{d(CTODbm)}$ for the given type of tests.

Table 3.5.3.3.2

Requirements for *CTOD* value for base metal with index "Arc", mm

Thickness, mm, max.	Strength level (required minimum value of yield stress, MPa)									
	normal	315	355	390	420	460	500	550	620	690
20	–	0,10	0,10	0,10	0,10	0,15	0,15	0,15	0,20[1]	0,20[1]
30	–	0,15	0,15	0,15	0,15	0,20	0,20	0,20	0,20[1]	0,25[1]
40	0,10	0,15	0,15	0,20	0,20	0,20	0,20	0,25	0,25[1]	0,30[1]
50	0,15	0,20	0,20	0,20	0,20	0,25	0,25	0,25[1]	0,25[1]	0,30[1]
70	0,20	0,20	0,20	0,25	0,25	0,30	0,30	0,30[1]	0,30[1]	0,35[1]
80	0,20	0,25	0,25	0,25	0,30	0,30	0,30	0,30[1]	0,35[1]	0,35[1]
100	0,25	0,25	0,25	0,30	0,30	0,35	0,35	0,35[1]	0,40[1]	0,40[1]

[1] The test result is also considered satisfactory, if prior to non-stable brittle fracture for all tested specimens the maximum load has been obtained irrespective of obtained value δ_m, refer to 2.2.10.5.1.1

3.5.3.3.3 The average value of *CTOD* for the HAZ metal shall be not less than that required by Table 3.5.3.3.3 with the minimum value at least 0,5 of the required one. If the number of correct tests is increased up to five and more, the lowest result may be ignored.

Table 3.5.3.3.3

Requirements for CTOD value for HAZ metal, mm

Thickness, mm, max.	Strength level (required minimum value of yield stress, MPa)									
	normal	315	355	390	420	460	500	550	620	690
20	–	0,10	0,10	0,10	0,10	0,10	0,15	0,15	0,15[1]	0,20[1]
30	–	0,10	0,10	0,10	0,15	0,15	0,15	0,15	0,20[1]	0,20[1]
40	0,10	0,10	0,10	0,15	0,15	0,15	0,15	0,15	0,20[1]	0,20[1]
50	0,10	0,10	0,10	0,15	0,15	0,15	0,15	0,20[1]	0,20[1]	0,25[1]
70	0,10	0,15	0,15	0,15	0,20	0,20	0,20	0,25[1]	0,25[1]	0,30[1]
80	0,15	0,15	0,15	0,20	0,20	0,20	0,25	0,25[1]	0,30[1]	0,30[1]
100	0,15	0,15	0,20	0,20	0,20	0,25	0,25	0,30[1]	0,35[1]	0,35[1]

[1] The test result is also considered satisfactory, if prior to non-stable brittle fracture for all tested specimens the maximum load has been obtained irrespective of obtained value δ_m, refer to 2.2.10.5.1.1.

The lowest test temperature at which Table 3.5.3.3.3 requirements are met, is assumed to be the minimum temperature $Td_{(CTODhaz)}$ for the given type of tests.

3.5.3.3.4 Based on the results of *NDT*, T_{kb} and *DWTT* the design material temperatures ($T_{d(NDT)}$, $T_{d(Tkb)}$, $T_{d(DWTT)}$) for each test type are determined, the greatest of all the values is $T_{d(b\text{-}d)}$, assumed to be the ductile-brittle transition temperature of the sampling steel. Depending on the rolled products thickness the required temperature values $T_{d(NDT)}$, $T_{d(Tkb)}$, $T_{d(DWTT)}$ for the steel marked with index "Arc" are given in Table 3.5.3.3.4.

Table 3.5.3.3.4

Determination of temperatures $T_{d(NDT)}$, $T_{d(Tkb)}$, $T_{d(DWTT)}$

Rolled product thickness, mm	$T_{d(NDT)}$, °C	$T_{d(Tkb)}$, °C	$T_{d(DWTT)}$, °C
From 10 up to 15 incl.	–	T_{kb}	*DWTT*
Over 15 up to 25 incl.	*NDT*	T_{kb}	*DWTT*
Over 25 up to 30 incl.	*NDT* + 15	T_{kb}	*DWTT*
Over 30 up to 40 incl.	*NDT* + 20	T_{kb} – 15	*DWTT* – 10
Over 40 up to 50 incl.	*NDT* + 25	T_{kb} – 25	—
Over 50 up to 60 incl.	*NDT* + 30	T_{kb} – 30	—
Over 60	*NDT* + 30	[1]	—

[1] Provided in addition to: $T_{kb} < 0{,}5T_{d(NDT)} + 15$.
Note. Additional condition means $T_{kb} \leq -5°$ for Arc40, and $T_{kb} \leq -15°$ for Arc60.

For the metal thickness of 40 mm and more, in case the difference between *NDT* and T_{kb} temperatures is over 50 °C, to control discontinuity of the material properties on resistance to brittle fracture, *NDT* specimens cut out from the mid-thickness of rolled products may be additionally tested in accordance with 2.2.10.3. *NDT* obtained during the test may be considered as a replacement of temperature $T_{d(Tkb)}$. It is possible to determine $T_{d(b\text{-}d)}$ based on one or two ductile-brittle transition temperatures determined: $T_{d(NDT)}$, $T_{d(Tkb)}$ or $T_{d(DWTT)}$.

3.5.3.3.5 In all types of tests the greatest value shall be accepted as the minimum operating material temperature T_d, up to which the steel in question may be used for all the structural members without limitations:

$$T_d = \max\left(T_{d(CTODbm)}, T_{d(CTODhaz)}, T_{d(b-d)}\right).".$$

3.5.3.3.6 *CTOD* acceptance testing shall be carried out during "Arc"-indexed rolled products manufacturing. At that, a set of three samples shall be taken from one square cut end of one plate from each batch in thickness approximating the full rolled product thickness. The samples shall be taken at 1/4 of the plate's width perpendicular to the rolling direction. The cut shall be located on thickness of the plate as for impact test specimens. Acceptance criteria are

specified in Table 3.5.3.3.2.

For "Arc"-indexed rolled products with thickness of less than 16 mm, *CTOD* testing may be replaced by tests for determining temperature T_{kb}. Compliance with the requirements of 2.2.10.2 (70 % of fibrous component) for temperature T_d in accordance with the scope of recognition shall be considered as the acceptance criterion.

3.5.4 Requirements for rolled plates with thickness of 15 mm and less.

Manufacture and supply of steel rolled products designed for operation at low temperatures having thickness between 6 and 15 mm inclusive, is not allowed without mechanical tests. Mechanical tests shall mandatory include impact bending tests (*KV*) at a temperature not exceeding T_d on test specimens in compliance with 2.2.3.1.

For the rolled products with strength class of 460 MPa and above, additional tests results shall be submitted (refer to 2.2.10). Procedures, criteria and scope of these tests shall be agreed with the Register in advance. Besides, if the above special tests were not performed, special standards shall be specified for the impact energy of the base metal and welded joint metal (refer to Table 3.5.4) at a temperature not exceeding T_D. The impact energy may be reduced to 70 % of the required value for one of the three test specimens. For the rolled products with thickness of less than 10 mm, the required impact energy shall be determined by Formula (2.2.3.1.1).

Table 3.5.4

The impact energy standards for Grade F rolled plates and their welded joints with thickness of up to 15 mm at a temperature not exceeding T_d for the ships of ice class and icebreakers in absence of the special tests

Minimum yield stress in MPa	Minimum average value for three test pieces	
	Rolled product thickness up to 10 mm	Rolled product thickness above 10 to 15 mm inclusive
460	46 *L*, 31 *T*	60 *L*, 40 *T*
500	50 *L*, 33 *T*	68 *L*, 45 *T*
550	55 *L*, 37 *T*	83 *L*, 55 *T*
620	70 *L*, 46 *T*	98 *L*, 65 *T*
690	86 *L*, 57 *T*	120 *L*, 80 *T*

3.5.5 Steel forgings.

3.5.5.1 Chemical composition.

The chemical composition of steel for forgings being part of hull structures is specified in the RS-agreed standards and/or approved specification and shall provide for the cold resistance characteristics as required. The sulphur and phosphorus content in alloy steel shall not exceed 0,015 % for each member.

3.5.5.2 Mechanical properties.

The mechanical properties of forged steel shall meet the requirements of 3.7.3. The required impact energy value during impact testing at the minimum design temperature T_d is specified in the RS-agreed standards and/or an approved specification, but shall be as follows:

not less than 27 J at the yield stress of steel less than 400 MPa;

not less than 41 J at the yield stress of steel from 400 to 690 MPa.

The percentage of fibrous component in the fracture of a specimen determined after impact testing shall be not less than 50 %.

To approve steel for essential forgings used at –30 °C and below, resistance to brittle fracture may be confirmed either by testing according to the *NTD* procedure (refer to 2.2.10.3) or by other test methods agreed with the Register, e.g. crack resistance tests.

The requirements for forgings for cargo-handling gear are set forth in Section 3 of the Rules for the Cargo Handling Gear of Sea-Going Ships.

3.5.6 Steel castings.

3.5.6.1 Chemical composition.

The chemical composition of steel for the castings being part of hull structures is specified in the RS-agreed standards and/or approved specification and shall provide for the cold resistance characteristics as required. The sulphur and phosphorus content in alloy steel shall not exceed 0,015 % for each member.

3.5.6.2 Mechanical properties.

The mechanical properties of cast steel shall meet the requirements of 3.8.3. The required impact energy value during impact testing at the design temperature is specified by standards or technical requirements, but shall be as follows:

not less than 27 J at the yield stress of steel less than 400 MPa;

not less than 41 J at the yield stress of steel from 400 to 690 MPa.

The percentage of fibrous component in the fracture of a specimen determined after impact testing shall be not less than 50 %.

To approve steel for essential castings used at –30 °C and below, resistance to brittle fracture may be confirmed either by testing according to the *NTD* procedure (refer to 2.2.10.3) or by other test methods agreed with the Register, e.g. crack resistance tests.

The requirements for castings for cargo-handling gear are set forth in Section 3 of the Rules for the Cargo Handling Gear of Sea-Going Ships.

3.5.7 Welding.

3.5.7.1 Technological requirements for the processes of welded structures manufacture, welded joints testing and for welding consumables shall be in compliance with Part XIV "Welding".

3.5.7.2 The grades of welding consumables for welding structures of normal, higher and high strength steels are chosen in compliance with 2.2, Part XIV "Welding" of these Rules and/or 2.5, Part XIII "Welding" of the Rules for the Classification, Construction and Equipment of MODU/FOP.

3.6 STEEL FOR CHAIN CABLES and ACCESSORIES

3.6.1 General.

3.6.1.1 The present requirements apply to steel rolled products, forgings and castings used for manufacture of chain cables and accessories.

Steel forgings shall generally meet the requirements of 3.7 and steel castings — the requirements of 3.8, unless otherwise stated.

3.6.1.2 All materials used for the manufacture of chain cables and accessories shall be supplied by the manufacturers recognized in accordance with 1.3.1.2. Grade 1 rolled products may be used for the manufacture of chain cables with the Manufacturer's Certificates.

3.6.1.3 The manufacturer shall submit the specification for material to the Register for approval.

Stated in the specification shall be the melting and deoxidation procedure, specified chemical composition and mechanical properties, and terms of rolled products' acceptance and delivery as well.

Unless stated otherwise, melting and deoxidation procedures, chemical composition and condition of rolled products' delivery that do not fully comply with the requirements of this Chapter may be applied in accordance with the standards and specifications of the works as well as the national and international standards.

3.6.2 Chemical composition.

3.6.2.1 The chemical composition of steel is determined by ladle analisis. The chemical composition of rolled steel bars, based on ladle analysis for grades 1 and 2 chain cables shall comply with Table 3.6.2.1.

Table 3.6.2.1

Chemical composition of rolled steel bars

Chain cable grade	Content of elements, %					
	C max	Si	Mn	P max	S max	Al total[1], min
1	0,20	0,15 0,35	0,40 min	0,040	0,040	–
2[2]	0,24	0,15 0,55	1,60 max	0,035	0,035	0,020

[1] Aluminium may be replaced partly by other fine graining elements.
[2] Additional alloying elements may be used on the basis of the works' manufacturing experience or a standard/specification.

3.6.2.2 For chain cables of grades 3, R3, R3S and R4 the chemical composition of steel shall comply with the specification agreed with the manufacturer of a chain cable and approved by the Register. In addition the steel for chain cables of grade R4 shall contain not less than 0,2 % of molybdenum.

3.6.2.3 The rolled bars shall be made of killed steel, and the steel for chain cables of grades 2, 3, R3, R3S and R4 shall be deoxidized and fine grain treated.

3.6.2.4 The chemical composition of forgings and castings shall be in accordance with the specification approved by the Register and be specified by the manufacturer for each heat.

3.6.3 Mechanical properties.

The mechanical properties of steel for chain cables and accessories shall ensure the properties according to the requirements of Table 3.6.3.

3.6.4 Condition of supply.

3.6.4.1 Rolled bars and round section forgings, unless otherwise stated, are supplied in as-rolled condition. The finished forgings and castings may be supplied after heat treatment appropriate for each chain cable grade as specified in Table 7.1.3.4. Forgings and castings may be subjected to normalizing, normalizing and tempering, hardening and tempering. The type of heat treatment shall conform to the specification approved by the Register.

Table 3.6.3

Chain cable grade	Yield stress R_{eH}[1], min, MPa	Tensile strength R_m [1], MPa	Elongation A_5, %	Reduction in area Z[2], %	Impact test [3,4] *KV*		
			min		Test temperature, °C	Base metal	Weld joint
						Impact energy, min, J	
1	–	370 — 490	25	–	–	–	–
2	295	490 — 690	22	–	0	27	–
3	410	690 min	17	40	0(–20)	60(35)	50(27)
R3	410	690 min	17	50	0(–20)	60(40)	50(30)
R3S	490	770 min	15	50	0(–20)	65(45)	53(33)
R4	580	860 min	12	50	–20	50	36

[1] For chain cables of grades R3, R3S and R4, $R_{eH}/R_m \le 0{,}92$.
[2] For cast steel of grades R3 and R3S, $Z \le 40$ %, for steel of grade R4 – $Z \le 35$ %. When the material susceptibility to hydrogen embrittlement for chain cables of grades R3, R3S and R4 is determined, $Z/Z_1 \ge 0{,}85$, where Z and Z_1 are the sample reduction in area under tension before and after heating, respectively.
[3] Impact tests of material for grade 2 chain cables may be waived if the chain cable is supplied in a heat treated condition.
[4] Required minimum impact energy value at the temperature of – 20 ° C is shown in brackets.

3.6.4.2 When the rolled products manufacturer is recognized, the chain cables of grades 3, R3, R3S and R4 shall (and chain cables of grades 1 and 2 may optionally) be subject to control testing of material after heat treatment similar to the one of the chain cable manufacturer.

3.6.5 Mechanical tests.

3.6.5.1 The rolled bars are submitted for testing in batches. A batch not more than 50 t in mass shall comprise bars of the same cast and supply condition with a tolerance of diameter within 4 mm.

3.6.5.2 From each batch of rolled bars, a sample is taken, out of which a tensile test specimen and a set of test specimens for impact testing (KV) for chain cables of grades 2, 3, R3, R3S and R4 are machined.

Specimens shall be taken from the sample in the longitudinal direction according to Fig. 3.6.5.2.

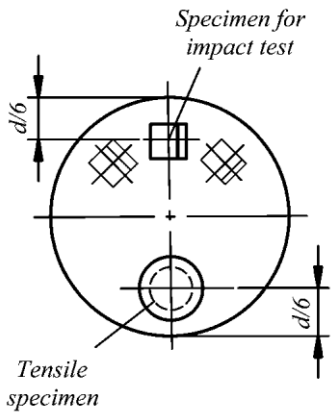

Fig. 3.6.5.2

The tests shall be carried out in accordance with the requirements of 2.2. Prior to the tests, the samples shall be heat-treated following the procedures corresponding to the heat treatment of finished chain cables in accordance with 7.1.3.4. The method and regime of the heat treatment shall be indicated by the chain cable manufacturer.

3.6.5.3 For chain cables of grades R3S and R4, tests of steel susceptibility to hydrogen embrittlement (reduction of ductility margin) shall be performed. For this purpose, two samples are taken from each cast:

in the case of continuous casting — from metal corresponding to the beginning and the end of the cast section;

in the case of ingot making — from metal corresponding to any two ingots.

Tensile test specimens shall be cut from each sample representing the central part of rolled product (the rolled steel products shall be heat treated in the same conditions and shall preferably belong to the same furnace charge). Two tensile test specimens taken from a heat of steel shall be 20 mm in diameter (it is permitted to use specimens 14 mm in diameter). One of the two specimens shall be tested not less than 3 h after production (for a specimen with a diameter of 14 mm, the time is 1,5 h). The other specimen shall be tested after being conditioned for 4 h at 250 °C (for a specimen with a diameter of 14 mm, the time is 2 h). Throughout the test up to the fracture of the specimen, the strain rate (change of elongation in fractions of gage length of the specimen) shall be less than 0,0003 s^{-1} (which amounts to approximately 10 min for a specimen of 20 mm in diameter). Testing is carried out to determine the tensile strength, elongation and reduction in area. Test results shall comply with Table 3.6.3 (refer to Note 2 at the bottom of the Table). When the obtained value $Z/Z_1 < 0,85$, the metal presented for testing may be degassed, after which all the above testing shall be performed.

3.6.5.4 Mechanical tests results shall meet the requirements of Table 3.6.3.

Where the rest results are unsatisfactory, retests in accordance with 1.3.4.2 shall be carried out. In this case, the reheat treatment is allowed and the new tests may be performed on the metal taken from the material initially submitted for testing. If the retest results are positive, those previously obtained may be disregarded.

3.6.5.5 Recognizing the manufacturer of steel for chain cables of grades R3, R3S and R4 the steel resistance to strain ageing, temper brittleness and hydrogen embrittlement shall be confirmed by following procedures approved by the Register.

3.6.6 Inspection.

3.6.6.1 The tolerances for rolled bars shall be within the limits specified in Table 3.6.6.1.

Table 3.6.6.1

Nominal diameter, mm	Tolerance on diameter, mm	Tolerance on roundness, ($d_{max} - d_{min}$), mm
<25	–0 +1,0	0,6
25 — 35	–0 +1,2	0,8
36 — 50	–0 +1,6	1,1
51 — 80	–0 +2,0	1,5
81 — 100	–0 +2,6	1,95
101 — 120	–0 +3,0	2,25
121 — 160	–0 +4,0	3,00

3.6.6.2 Rolled bars shall be free from shrinkage holes, cracks, flakes (hairlines), folds, laps and scale and also other internal and surface defects that might impair proper workability and use.

The longitudinal discontinuities, not more than 1 % of rolled bars diameter in depth, may be repaired by grinding with smooth transition to the surface.

3.6.7 Non-destructive testing.

Rolled bars for chain cables of grades R3, R3S and R4 shall be subjected to 100 % ultrasonic testing and also to magnetic particle or eddy-current testing according to RS-agreed standards approved by the Register.

The scope of non-destructive testing may be reduced if the quality stability of rolled bars manufacturing is confirmed.

3.6.8 Marking and documentation.

Generally, the marking shall be made in accordance with the requirements of 1.4.

The marking content shall allow the identification of the supplied product and may be prescribed by the manufacturer. In this case, as a minimum, the marking shall indicate the grade and heat the rolled products belong to.

Round bars up to and including 40 mm in diameter may be supplied in bundles with the marking allowed to be made on labels (refer to 1.4).

Each batch of steel for grade 2, 3, R3, R3S and R4 cable chains shall be accompanied by the Register certificate.

The Manufacturer's Certificates shall contain the following data:

document number;

order number;

hull number of ship or floating facility;
rolled products quantity and dimensions, batch weight;
specification for steel, and chain cable grade;
heat number;
manufacturing methods;
chemical composition;
procedure for sample heat treatment.

3.7 STEEL FORGINGS

3.7.1 General.

3.7.1.1 The present requirements are applicable to steel forgings intended for hull and machinery applications such as rudder stocks, pintles, propeller and intermediate shafts, crankshafts, camshafts, connecting rods, piston rods, and other parts of machinery and gearing set forth in other parts of the Rules and having respective references to this Chapter. Where relevant, these requirements are also applicable to material for forging stock and to rolled bars intended to be machined into components of simple shape.

3.7.1.2 The requirements of this Chapter are applicable only to steel forgings (or rolled steel when used instead of steel forgings as specified in 3.7.1.1) where the designation is determined proceeding from the properties at room temperature.

Additional requirements for the forgings with confirmed cold resistance properties at the required sub-zero temperature are given in 3.5.5.

Requirements for the forgings intended for operation at cryogenic temperatures are specified in Part IX "Materials and Welding" of the Rules for the Classification and Construction of Ships Carrying Liquefied Gases in Bulk.

3.7.1.3 Alternatively to the manufacturing of steel forgings (or rolled steel when used instead of steel forgings as specified in 3.7.1.1), forgings, which comply with national or proprietary specifications, may be accepted by the Register. In this case, according to the procedure specified in 1.3.1.2, the equivalence of these alternative requirements or their justification for the given manufacture and/or application shall be confirmed to the Register.

3.7.1.4 Steel forgings (or rolled steel when used instead of steel forgings as specified in 3.7.1.1) shall be made by the manufacturer recognized by the Register in compliance with 1.3.1.2. The steel used in the manufacture of the forgings shall be made by the process approved by the Register. Adequate top and bottom discards (of a rolled blank) shall be made to ensure freedom from piping and harmful segregations in the finished forgings.

3.7.1.5 The plastic deformation (reduction ratio) shall be such as to ensure soundness, uniformity of structure and satisfactory mechanical properties after heat treatment. The reduction ratio shall be calculated with reference to the average cross-sectional area of the cast material. Where the cast material is initially upset, the plastic deformation reached during this operation may be considered.

Unless otherwise stipulated or agreed the total reduction ratio shall be at least:

for forgings made from ingot or from forged bloom or billet, using continuous casting plant — 3:1 where $L>D$ and 1,5:1 where $L \leq D$;

for forgings made from rolled products, 4:1 where $L>D$ and 2:1 where $L \leq D$;

for forgings made by upsetting, the length after upsetting shall be not more than one-third of the length before upsetting or, in the case of an initial forging reduction of at least 1,5:1, not more than one-half of the length before upsetting;

for rolled bars, 6:1

where L and D are the length and diameter respectively of the part of the forging or its part.

3.7.1.6 For crankshafts, where grain flow is required in the most favourable direction in regard to the mode of stressing in service, the pressure shaping process shall be subject to agreement by the Register.

3.7.1.7 The shaping of forgings or rolled slabs and billets by flame cutting, scarfing or arc-air gouging shall be carried out before the final heat treatment. Preheating shall be employed when necessitated by the composition and/or thickness of the steel. For certain components, subsequent machining of all flame cut surfaces may be required.

3.7.1.8 When two or more forgings are joined by welding to form a composite component, the chemical composition and welding procedure shall be agreed by the Register; welding joints' procedure qualification tests may be required.

3.7.2 Chemical composition.

3.7.2.1 The chemical composition of steel for forgings shall be appropriate for the type of steel and the required mechanical and special properties of the forgings being manufactured.

The forgings shall be made from killed steel.

3.7.2.2 The chemical composition of each heat shall be determined by the manufacturer on a sample taken preferably during the pouring of the heat. When multiple heats are tapped into a common ladle, the ladle analysis shall apply.

3.7.2.3 The chemical composition shall comply with the requirements of Table 3.7.2.3-1 (for hull steel forgings) and Table 3.7.2.3-2 (for machinery steel forgings) or with the requirements of the specification agreed by the Register.

Table 3.7.2.3-1[1]

Steel type	C	Si	Mn	P	S	Cr	Mo	Ni	Cu[2]	Total residuals
Carbon, carbonmanganese	0,23[3,4]	0,45	0,3 — 15	0,035	0,035	0,30[2]	0,15[2]	0,40[2]	0,30	0,85
Alloy[5]	–	0,45	–	0,035	0,035	–	–	–	0,30	–

1 Composition in percentage mass by mass maximum unless shown as a range.
2 Element is considered as residual element.
3 The carbon content may be increased above this level, provided that the carbon equivalent (C_{eq}) is not more than 0,41 %, calculated using the following formula: $C_{eq}\ (\%) = C + Mn/6 + (Cr + Mo + V)/5 + (Ni + Cu)/15$.
4 The carbon content of carbon and carbon-manganese steel forgings not intended for welded structures may be 0,65 % maximum.
5 The content of C, Mn, Cr, Mo, Ni and the total content of residual elements shall be indicated in the specification to be submitted for agreement.

Note. Shaft and rudder stocks forgings shall be of weldable quality.

Table 3.7.2.3-2[1]

Steel type	C	Si	Mn	P	S	Cr	Mo	Ni	Cu[2]	Total residuals
Carbon, carbonman-ganese	0,65[3]	0,45	0,3 — 1,5	0,035	0,035	0,30[2]	0,15[2]	0,40[2]	0,30	0,85
Alloy[4]	0,45	0,45	0,3 — 1,0	0,035	0,035	Min 0,40[5]	Min 0,15[5]	Min 0,40[5]	0,30	–

1 Composition in percentage mass by mass maximum unless shown as a range or as a minimum.
2 Element is considered as residual element.
3 The carbon content of carbon and carbon-manganese steel forgings intended for welded structures shall be 0,23 maximum. The carbon content may be increased above this level, provided that the carbon equivalent (C_{eq}) is not more than 0,41 %, calculated using the following formula: $C_{eq}\ (\%) = C + Mn/6 + (Cr + Mo + V)/5 + (Ni + Cu)/15$.
4 Where alloy steel forgings are intended for welded structures, the proposed chemical composition shall be indicated in the specification to be submitted for agreement.
5 The content of one or more of the specified elements shall comply with the minimum content.

3.7.2.4 If not otherwise stated, grain refining elements such as aluminium, niobium or vanadium may be added at the discretion of the manufacturer. The content of such elements shall be reported in the results of the chemical analysis.

3.7.2.5 Elements designated as residual elements shall not be contained in steel in great quantity. The content of such elements shall be reported in the results of the chemical analysis.

3.7.3 Mechanical properties.

3.7.3.1 Tables 3.7.3.1-1 and 3.7.3.1-2 give the minimum requirements of the Register for yield stress, elongation, reduction in area and impact test energy values corresponding to the different strength levels.

Where it is proposed to use a steel with a specified minimum tensile strength intermediate to those given, corresponding minimum values required by the Register for the other properties specified in the above tables may be obtained by interpolation.

Forgings may be used where their properties are those established in the relevant RS-agreed standards.

Table 3.7.3.1-1

Mechanical properties for hull steel forgings

Steel type	Tensile strength R_m, min, MPa	Yield stress R_e, min, MPa	Elongation A_5, min, %		Reduction in area Z, min, %	
			Longitudinal	Tangential	Longitudinal	Tangential
Carbon, carbon-manganese	400	200	26	19	50	35
	440	220	24	18	50	35
	480	240	22	16	45	30
	520	260	21	15	45	30
	560	280	20	14	40	27
	600	300	18	13	40	27
Alloy[5]	550	350	20	14	50	35
	600	400	18	13	50	35
	650	450	17	12	50	35

N o t e . The tensile strength values obtained at tensile testing shall not exceed the set values by more than:
120 MPa for the specified R_m < 600 MPa;
150 MPa for the specified R_m ≥ 600 MPa.

Table 3.7.3.1-2

Mechanical properties for machinery steel forgings[1]

Steel type	Tensile strength[2] R_m, min, MPa	Yield stress R_e, min, MPa	Elongation A_5, min, %		Reduction in area Z, min, %		Brinell hardness[3]
			Longitudinal	Tangential	Longitudinal	Tangential	
Carbon, carbon-manganese	400	200	26	19	50	35	110 — 150
	440	220	24	18	50	35	125 — 160
	480	240	22	16	45	30	135 — 175
	520	260	21	15	45	30	150 — 185
	560	280	20	14	40	27	160 — 200
	600	300	18	13	40	27	175 — 215
	640	320	17	12	40	27	185 — 230
	680	340	16	12	35	24	200 — 240
	720	360	15	11	35	24	210 — 250
	760	380	14	10	35	24	225 — 265
Alloy	600	360	18	14	50	35	175 — 215
	700	420	16	12	45	30	205 — 245
	800	480	14	10	40	27	235 — 275
	900	630	13	9	40	27	260 — 320
	1000	700	12	8	35	24	290 — 365
	1100	770	11	7	35	24	320 — 385

[1] For propeller shaft forgings, except non-ice ships and ships with ice category mark **Ice1**, impact tests for all steel grades shall be carried out at –10 °C and the minimum required average impact energy value *KV* of 27 J (longitudinal specimen). No more than for one of three specimens the result may be by 30 % below than required.
[2] The following ranges for tensile strength may be additionally specified:
the tensile strength values obtained at tensile testing shall not exceed the following:
150 MPa for the specified R_m < 900 MPa;
200 MPa for the specified R_m ≥ 900 MPa.
[3] The hardness values are given for information purposes only.

3.7.3.2 Hardness tests may be required by the Register on the following:

.1 gear forgings after completion of heat treatment and prior to machining the gear teeth. The hardness shall be determined at four positions equally spaced around the circumference of the surface where teeth will subsequently be cut. Where the finished diameter of the toothed portion exceeds 2,5 m, the above number of test positions shall be increased to eight. Where the width of a gear wheel rim forging exceeds 1,25 m, the hardness shall be determined at eight positions at each end of the forging;

.2 small crankshaft and gear forgings, which have been batch tested.

In such cases at least one hardness test shall be carried out on each forging.

The results of hardness tests shall be reported to the representative of the Register. Corresponding Brinell hardness values are given in Table 3.7.3.1-2 for information purposes.

Hardness tests may also be required on forgings, which have been induction hardened, nitrided or carburized. For gear forgings these tests shall be carried out on the teeth after, where applicable, they have been ground to the finished profile. The results of such tests shall comply with the documentation agreed and recognized by the Register (refer to 3.7.4.6).

3.7.3.3 Where the test results are unsatisfactory re-testing shall be conducted in accordance with 1.3.2.3.

3.7.4 Heat treatment (including surface hardening and straightening).

3.7.4.1 All the forgings shall be suitably heat treated to obtain the required mechanical properties and metal structure, and to refine the grain structure. The procedure of heat treatment shall be chosen by the manufacturer proceeding from the chemical composition of steel, the purpose and dimensions of the forging.

3.7.4.2 Except as provided in 3.7.4.7 and 3.7.4.8 forgings shall be supplied in one of the following conditions:

.1 carbon and carbon-manganese steels:
fully annealed;
normalized;
normalized and tempered;
quenched and tempered;

.2 alloy steels:
quenched and tempered.

The tempering temperature shall not be less than 550 °C. Where forgings for gearing are not intended for surface hardening, lower tempering temperature may be allowed.

3.7.4.3 Alloy steel forgings may be supplied in the normalized and tempered condition. In each case the specifications for forgings shall be agreed by the Register and confirmed by the results of control tests when necessary.

3.7.4.4 Heat treatment shall be carried out in properly equipped furnaces, which have adequate means for temperature recording. The furnace shall provide the required quality of operation and proper level of control over the process regardless of forging dimensions. In the case of very large forgings, or lack of the required equipment methods of heat treatment will be specially considered by the Register on a separate request.

3.7.4.5 If for any reasons a forging is subsequently heated for further hot working, the forging shall be reheat treated.

3.7.4.6 Where it is intended to surface harden forgings, the proposed procedure and specification shall be agreed by the Register. The results of tests to verify the uniformity and depth of surface layer shall be submitted to the Register.

3.7.4.7 Where induction hardening or nitriding shall be carried out, forgings shall be heat treated at an appropriate stage and condition suitable for this subsequent surface hardening.

3.7.4.8 Where carburizing shall be carried out, forgings shall be heat treated at an appropriate stage (generally either by full annealing or by normalizing and tempering) and condition providing the required level of mechanical properties and hardening.

3.7.4.9 If a forging is locally reheated or any straightening operation is performed after the final heat treatment, it shall be heat treated to relive the subsequent stress.

3.7.4.10 The forge shall maintain records of heat treatment identifying conditions, the furnace used, furnace charge, time of charging, temperatures and time of conditioning. The records shall be presented to the Register on request.

3.7.5 Sampling.

3.7.5.1 The sample, sufficient for the required tests and for possible retest purposes, shall be provided with a cross-sectional area of not less than that part of the forging, which it represents. This sample shall be integral with each forging except as provided in 3.7.6.1.10 and 3.7.6.1.13. Where batch testing is permitted according to 3.7.6.1.13, the sample may alternatively be a production part or separately forged. Separately forged sample shall have dimensions not less than those of the forgings represented.

3.7.5.2 Generally, a tensile test specimen and, when required, a set of impact tests specimens shall be cut from a sample.

3.7.5.3 Test specimens shall normally be cut with their axes either mainly parallel (longitudinal test) or mainly tangential (tangential test) to the principal axial direction of each product.

Unless otherwise agreed, longitudinal test specimens shall be cut the following way:

.1 for thickness or diameter up to maximum 50 mm, the axis shall be at the mid-thickness or the center of the cross section;

.2 for thickness or diameter greater than 50 mm, the axis shall be at one-quarter thickness (1/4 of the diameter) or 80 mm, whichever is less, below any heat-treated surface.

3.7.6 Scope of testing.

3.7.6.1 Forgings shall be submitted for testing individually or in batches. Except as provided in 3.7.6.13 the number and direction of tests shall correspond to the listed below:

.1 hull forgings (such as rudder stocks, pintles, etc) and general machinery components (such as shafting, connecting rods, etc.):

one sample shall be taken from the end of each forging in a longitudinal direction except that, at the discretion of the manufacturer, the alternative directions or positions as shown in Fig. 3.7.6.1.1-1, 3.7.6.1.1-2 and 3.7.6.1.1-3 may be used.

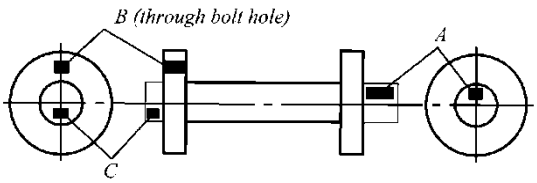

Fig. 3.7.6.1.1-1

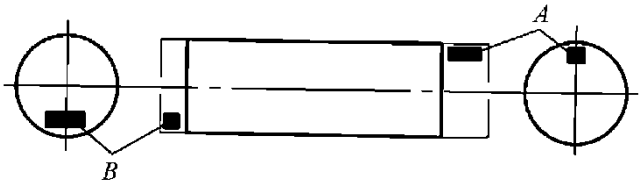

Fig. 3.7.6.1.1-2

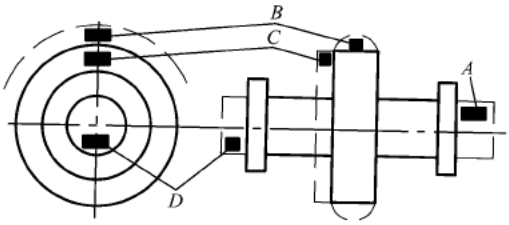

Fig. 3.7.6.1.1-3

where a forging exceeds both 4 t in mass and 3 m in length, one sample shall be taken from each end. These limits refer to the "as forged" mass and length but excluding the sample material;

.2 pinion forgings:

where the finished machined diameter of the toothed portion exceeds 200 mm, one sample shall be taken from each forging in a tangential direction adjacent to the toothed portion according to Fig. 3.7.6.1.2 (position B). Where the dimensions preclude sampling from position B, sample in a tangential direction shall be taken according to Fig. 3.7.6.1.2 (position C);

if however, the journal diameter is 200 mm or less, the sample shall be taken in a longitudinal direction according to Fig. 3.7.6.1.2 (position A);

where the finished length of the toothed portion exceeds 1,25m, one sample shall be taken from each end;

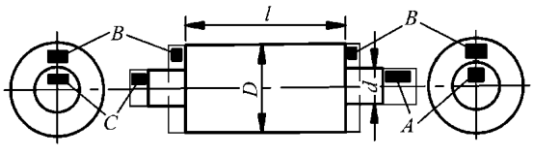

Fig. 3.7.6.1.2

.3 small pinion forgings:

where the diameter of the toothed portion is 200 mm or less, one sample shall be taken in a longitudinal direction according to Fig. 3.7.6.1.2 (position A);

.4 gear wheel forgings:

one sample shall be taken from each forging in a tangential direction according to Fig. 3.7.6.1.4 (position A or B);

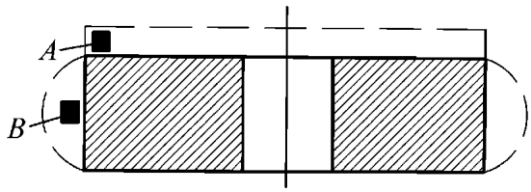

Fig. 3.7.6.1.4

.5 gear wheel rim forgings (made by expanding):

one sample shall be taken from each forging in a tangential direction according to Fig. 3.7.6.1.5 (position A or B);

where the finished diameter exceeds 2,5 m or the mass (as heat treated excluding test material) exceeds 3 tonnes, two samples shall be taken from diametrically opposite positions according to Fig. 3.7.6.1.5 (positions A and B).

The mechanical properties may as well be determined on longitudinal test specimens;

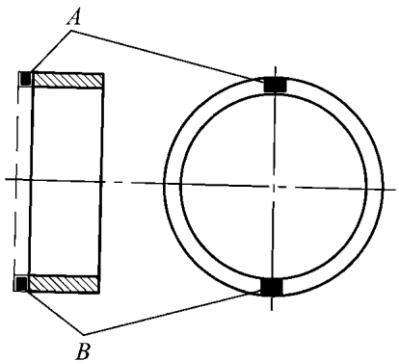

Fig. 3.7.6.1.5

.6 pinion sleeve forgings:

one sample shall be taken from each forging in a tangential direction according to Fig. 3.7.6.1.6 (position A or B);

where the finished length exceeds 1,25 m, one sample shall be taken from each end;

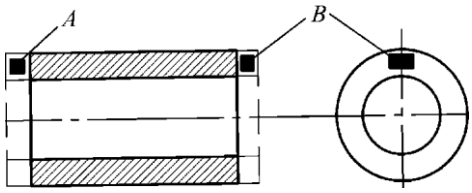

Fig. 3.7.6.1.6

.7 crankweb forgings:

one sample shall be taken from each forging in a tangential direction;

.8 solid-forged crankshafts:

one sample shall be taken in a longitudinal direction from the driving shaft end (from coupling) of each forging according to Fig. 3.7.6.1.8 (position A);

where the mass (as heat treated but excluding test material) exceeds 3 tonnes, one sample in a longitudinal direction shall be taken from each end according to Fig. 3.7.6.1.8 (positions A and B);

where, however, the crankthrows are formed by machining or flame cutting, the second sample shall be taken in a tangential direction from material removed from the crankthrow at the end opposite the driving shaft end (from coupling) according to position C;

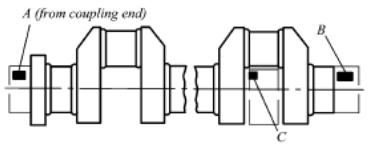

Fig. 3.7.6.1.8

.9 forgings with grain flow in the most favorable direction where the method of manufacture is subject to approval by the Register in accordance with 3.7.1.6:

the number and position of samples shall be agreed in the course of approval of respective procedure and recognition of the manufacturer;

.10 when a forging is subsequently divided into a number of components, all of which are heat treated together in the same furnace charge, for test purposes this may be regarded as one forging and the number of tests required shall be related to the total length and mass of the original multiple forging;

.11 except for components, which shall be carburized, or for hollow forgings samples shall not be cut from a forging until all heat treatment has been completed;

.12 when forgings shall be carburized, the sample size shall provide for both preliminary tests (after the forge) and for final tests (after completion of carburizing). For this purpose duplicate sample shall be taken from positions as detailed in 3.7.6.1, except that irrespective of the dimensions or mass of the forging, tests are required from one position only and, in the case of forgings with integral journals, shall be cut in the longitudinal direction.

Samples shall be machined to a diameter of *D*/4 or 60 mm, whichever is less, where *D* is the finished diameter of the toothed portion.

For preliminary tests (after the forge) the samples shall be given a blank carburizing and heat treatment cycle simulating that which subsequently will be applied to the forging. For final acceptance tests, the rest of samples shall be blank-carburized and heat-treated along with the forgings, which they represent. At the discretion of the forge or gear manufacturer, test samples of larger cross section may either be carburized or blank-carburized, but these shall be machined to the required diameter prior to the final quenching and tempering heat treatment.

Alternative procedures for testing the forgings to be carburized are subject to the approval the Register as part of the submitted documentation;

.13 normalized forgings with a mass up to 1000 kg each and quenched and tempered forgings with mass up to 500 kg each may be batch tested. A batch shall consist of forgings of similar shape and dimensions, made from the same heat of steel, heat treated in the same furnace charge and with a total mass not exceeding 6 t for normalized forgings and 3 t for quenched and tempered forgings, respectively;

.14 a batch testing procedure may also be used for hot rolled bars. Batch quantity is determined proceeding from the following:

.14.1 material from the same rolled ingot or bloom provided that these are all heat treated in the same furnace charge;

.14.2 bars of the same diameter and heat, heat-treated in the same furnace charge and with a total mass not exceeding 2,5 t;

.15 the preparation of test specimens and testing procedures shall comply with the relevant requirements of Section 2.

Unless otherwise agreed, all tests shall be carried out in the presence of the Register representative.

3.7.7 Inspection.

3.7.7.1 All forgings shall be presented to the Register representative for visual testing including, where necessary, the examination of internal surfaces and bores. Unless otherwise agreed, the verification of dimensions is the responsibility of the Manufacturer.

The forgings shall be free from defects, which would be prejudicial to their proper application.

3.7.7.2 When required by the relevant parts of the Rules or by the Register approved technical documentation, the forgings, including forged composite components, which shall be welded (refer to 3.7.1.8), appropriate non-destructive testing shall also be carried out. The results shall be reported to the Register representative and included in a relevant quality document of

the manufacturer on a forging or batch. Recommendations on approval of technical documentation and on non-destructive testing are given in 2.5, Part III "Technical Supervision during Manufacture of Materials" of the Rules for Technical Supervision during Construction of Ships and Manufacture of Materials and Products for Ships.

The scope of testing and acceptance criteria shall be agreed with the Register.

3.7.7.3 When surface hardening of forgings is required (refer to 3.7.4.6), additional samples may be selected at the time of inspection. These samples shall be subsequently sectioned in order to determine the hardness, shape, area and depth of the locally hardened zone and which shall comply with the requirements of the Register approved documentation.

3.7.7.4 In the event of any forging proving defective in accordance with the Rules or Register approved documentation during subsequent machining or testing, it shall be rejected notwithstanding prior survey results.

3.7.7.5 It is permitted to remove surface defects by grinding or chipping and grinding within mechanical allowances. The resulting grooves shall have a bottom radius of approximately three times the groove depth. Sharp contours are not permitted. Complete elimination of defective material shall be verified by magnetic particle or penetrant testing.

3.7.7.6 Repair welding of forgings is defined by the forgings documentation approved by the Register. Procedure and location of the repair, subsequent heat treatment and inspection methods and criteria shall, for each case, be entered into a separate document and approved by the Register.

3.7.7.7 The forging manufacturer shall maintain records of repairs and subsequent inspections, which results shall be shown in a drawing or sketch of the forging. Respective information shall be submitted to the Register representative at the latter's request.

3.7.8 Identification and marking.

3.7.8.1 The manufacturer of forgings shall adopt a system of identification, which will enable all finished forgings, at the stage of being submitted to the Register, to be traced to the original cast, and the data pertinent to the process of a particular forging (batch) manufacture, which shall be recorded during the above process, including heat treatment and repair, shall be presented to the Register representative on request.

3.7.8.2 All forgings shall be clearly marked in a specified place and in a specified manner with the Register stamp or brand to include at least the following particulars:

manufacturer's name or trade mark;

identification number or other marking, which will enable the full history of the forging to be traced;

steel grade.

3.7.8.3 Where small forgings are manufactured in large numbers, modified arrangements for identification may be specially agreed by the Register.

3.7.8.4 The Manufacturer's Certificate to be submitted to the Register representative shall include the following particulars:

purchaser's name and order number;

steel grade and description of forgings;

identification number;

steel melting process, cast number and chemical composition as per the ladle analysis;

results of mechanical tests;

results of non-destructive testing, where applicable;

details of heat treatment, including temperature and time of conditioning.

3.8 STEEL CASTINGS

3.8.1 General.

3.8.1.1 Steel castings subject to survey by the Register, when produced in conformity with the relevant parts of the Rules, shall be manufactured and tested in accordance with the requirements stated below.

3.8.1.2 These requirements are applicable to carbon and carbon-manganese steel castings used in hull and ship machinery structures, (such as stern frames, rudder frames, crankshafts, turbine casings, bedplates, etc.), the purpose of which shall be established proceeding from their properties determined at room temperature.

3.8.1.3 The requirements for alloy steel castings with special properties shall be defined by the product designer in accordance with the national/international standards and thereafter approved by the Register. The documents submitted to the Register for approval shall contain detailed information on the chemical composition, mechanical and special properties, heat treatment procedures and scope of testing the castings.

Additional requirements for the castings with confirmed cold resistance properties at the required sub-zero temperature are given in 3.5.6.

Requirements for the castings intended for operation at cryogenic temperatures are specified in Part IX "Materials and Welding" of the Rules for the Classification and Construction of Ships Carrying Liquefied Gases in Bulk.

3.8.1.4 When two or more castings are joined by welding to form a composite item, the chemical composition of steel and the welding procedure are subject to approval by the Register.

3.8.1.5 The castings shall be manufactured at works recognized according to 1.3.1.2 in conformity with the procedure approved by the Register. Use of surface hardening in the production process shall be also agreed with the Register.

3.8.2 Chemical composition.

3.8.2.1 The chemical composition of a particular type of steel will be established proceeding from the mechanical and special properties required. The castings shall be made from killed steel.

3.8.2.2 For carbon and carbon-manganese steel castings the chemical composition of ladle samples shall comply with the requirements of Table 3.8.2.2 and/or of the documents (specifications, standards, etc.) agreed with the Register.

Table 3.8.2.2

Steel grade	Application	C, max	Si, max	Mn, max	S, max	P, max	Residual elements, max				Total number of residual elements
							Cu	Cr	Ni	Mo	
Carbon, carbon-manganese	Non-welded structures	0,40	0,60	0,50 — 1,60	0,040	0,040	0,30	0,30	0,40	0,15	0,80
	Welded structures	0,23	0,60	1,60	0,040	0,040	0,30	0,30	0,40	0,15	0,80

3.8.2.3 Unless otherwise required, suitable grain-refining elements may be used at the discretion of the manufacturer. The content of such elements shall be reported in the ladle analysis.

3.8.3 Mechanical properties.

3.8.3.1 The mechanical propertied of steel castings shall meet the requirements of Table 3.8.3.1 and/or of documentation approved by the Register. Table 3.8.3.1 give minimum values of yield stress, elongation and reduction in area established depending on the required level of the tensile strength values for the steel castings.

Table 3.8.3.1

Tensile strength R_m, min, MPa	Yield stress R_{eH} or $R_{p0,2}$, MPa	Elongation A_5, %	Reduction in area Z, %
400	200	25	40
440	220	22	30
480	240	20	27
520	260	18	25
560	300	15	20
600	320	13	20
Notes: 1. Minimum yield stress value 150 MPa is allowed. 2. For intermediate tensile strength values, the minimum values of yield stress, elongation and reduction in area may be determined by linear interpolation.			

3.8.3.2 Where tensile test results are unsatisfactory, retesting shall be conducted in compliance with the requirements of 3.8.6.4.

3.8.4 Heat treatment.

3.8.4.1 To ensure the required structure and mechanical properties the castings shall undergo heat treatment. The procedure of heat treatment shall be chosen by the manufacturer proceeding from the chemical composition of steel, the purpose and shape of the castings. The following conditions shall be observed:

the tempering temperature shall not be less than 550 °C;

the stress relief heat treatment of castings for components such as crankshafts and engine bedplates where dimensional stability and freedom from internal stresses are important, shall be carried out at a temperature of not less than 550 °C followed by furnace cooling to 300 °C or lower;

if a casting is reheated or any straightening operation is performed after the final heat treatment, a subsequent stress relieving heat treatment may be required.

3.8.4.2 As a rule, the steel castings shall be supplied in the following condition:

completely annealed;

after normalizing;

after normalizing and tempering;

after quenching and tempering.

All necessary data on the heat treatment process including procedures and appropriate instrument readings shall be submitted to the Register representative on his demand.

3.8.4.3 In case where steel casting after final heat treatment is subjected to local heating or to operations producing additional strain, heat treatment may be required to relieve residual stress.

3.8.4.4 Heat treatment shall be carried out in properly constructed furnaces which are efficiently maintained and have adequate means for control and recording of temperature. The furnace dimensions shall be such as to allow the whole casting to be uniformly heated to the necessary temperature.

In the case of very large castings alternative methods for heat treatment will be specially considered by the Register.

3.8.5 Sampling.

3.8.5.1 Sampling may be effected directly from the casting or the test samples may be cast to it. They shall have a thickness not less than 30 mm.

The use of separately cast samples is permitted, in which case the dimensions of the sample shall correspond to the casting dimensions.

3.8.5.2 Where two or more samples shall be provided for a casting they shall be cast at locations as widely separated as possible.

3.8.5.3 The samples shall be heat treated together with the castings, which they represent.

3.8.5.4 The size of samples shall be such as to ensure the performance of tests including re-tests, if required. All samples shall be identified.

3.8.6 Scope of testing.

3.8.6.1 At least one sample shall be provided for each casting. Where one casting is made from several casts (without mixing) the number of samples shall be equal to the number of casts involved. The condition of 3.8.5.2 shall be met in this case.

Where the casting is of complex design or where the finished mass exceeds 10 t, at least two samples shall be provided.

3.8.6.2 A batch testing procedure may be adopted for castings. A batch shall consist of castings of approximately the same size and shape made from one cast and heat treated in the same furnace charge and having the total mass equal to or less than 1000 kg.

Such batch may be represented by one of the castings considered as a sample or by a separately cast sample, the dimensions of which shall correspond to the castings comprising the batch.

3.8.6.3 Unless otherwise specified, at least one tensile test specimen shall be taken from each sample. Test specimens shall be prepared and the tests conducted in conformity with the requirements of Section 2. Unless otherwise stated, tests shall be conducted in the presence of the Register representative.

3.8.6.4 Where the tensile tests yield unsatisfactory results the tests shall be repeated on two additional specimens preferably cut out from the same sample. In case the cutting out of additional specimens from the same sample is not possible, specimens may be cut out from other sample or casting.

Where the tests carried out on two additional specimens yield satisfactory results, the casting and the batch if represented by the casting shall be accepted.

Where the test result on at least one of two additional specimens is unsatisfactory, the casting submitted shall be rejected. However, the remaining semi-finished products of the batch may be accepted by the Register, provided that satisfactory test results are obtained on two more castings comprising the batch involved. Where unsatisfactory test results are obtained on one of two additionally selected castings, the entire batch shall be rejected.

At the manufacturer's discretion, the batch or casting rejected may be submitted to re-tests on the same conditions after repeated heat treatment.

3.8.6.5 Where relevant requirements shall be found in other parts of the Rules, the castings shall be subjected to additional tests, such as pressure tests.

Where upon completion of all tests, owing to machining of the castings or as a result of any structural tests a defect is found, which interferes with the use of casting for its designated purpose, the batch shall be rejected irrespective of the availability of the relevant documents.

3.8.7 Inspection.

3.8.7.1 The castings submitted for inspection and control testing shall be cleaned, de-gated, free of risers and burrs, etc.

The castings shall be free from defects, which would be prejudicial to their proper application in service.

The responsibility for fulfilment of the requirements for dimensions of the castings shall be imposed on the manufacturer of the castings.

3.8.7.2 Where relevant requirements shall be found in other parts of the Rules or following the instructions of a Surveyor the castings shall undergo non-destructive testing. The testing procedure and the allowances for defects shall be in conformity with documentation approved by the Register. Recommendations on approval of technical documentation and on non-destructive testing are given in 2.5, Part III "Technical Supervision during Manufacture of Materials" of the Rules for Technical Supervision during Construction of Ships and Manufacture of Materials and Products for Ships.

3.8.7.3 Surface defects lying within machining allowances may be removed by machining.

3.8.7.4 Defects may be repaired by welding in accordance with 2.6.3, Part XIV "Welding". Prior to carrying out weld repairs of large-sized defects, alloy steel castings, castings for crankshafts and for other main components shall be pre-heated in accordance with 3.8.4; if required by the Surveyor, the welded spots shall be subjected to non-destructive testing.

3.8.7.5 The size, number of defects accepted uncorrected as well as of defects to be corrected shall be established by the manufacturer and agreed with the customer.

The procedure of repair and subsequent inspection including, if necessary, welding is subject to agreement with the Register. All work shall be performed by the qualified personnel.

Repair welding shall be performed with the use of welding consumables recognized by the Register, which ensure properties of the deposited metal not inferior than those of the casting metal.

On completion of the repair welding, the castings shall be subjected to heat treatment to relieve residual stress at temperature not lower than 550 °C. The type and procedure of heat treatment depends on the type and nature of repair work performed previously as well as on the material and size of the castings. Refusal to carry out the above postweld heat treatment is generally acceptable for small scopes of repair.

3.8.7.6 Upon completion of the repair welding of the castings, the magnetic particle or penetrant testing shall be carried out. Additional ultrasonic or radiographic testing may be required depending on the nature and size of surface defects detected.

Testing criteria are also subject to agreement with the Register.

3.8.7.7 All repair works and their results shall be documented and available for the Register representative.

3.8.8 Marking and documentation.

3.8.8.1 The manufacturer of the castings shall have an identification system, which enables to identify the casting with the ladle at a stage of submission to the Register, while upon the request of the Register representative, the manufacturer shall present the data, recorded in course of manufacture referred to the production process of a particular casting, or a batch, including thermal treatment and repair.

3.8.8.2 Every casting shall have clearly visible stamp or brand of the Register marked by the specified method and in specified location, and, at least, shall contain the following data:

name or designation of the manufacturer;

number or other marking, which enables to identify the presented material and the process of its production;

grade or mark of steel.

3.8.8.3 Where small castings are manufactured in large numbers the castings identification system may be agreed with the Register separately.

3.8.8.4 Manufacturer's Certificate, submitted to the Register representative, shall contain the following data:

name of purchaser and number of purchase order;

grade, (mark) of steel, type of casting;

identification number;

steel melting process, cast number and chemical composition as per the ladle analysis;

mechanical test results;

non-destructive testing results, if necessary;

heat treatment type, including temperature and time of conditioning.

3.9 SPHEROIDAL OR NODULAR GRAPHITE IRON CASTINGS

3.9.1 General.

3.9.1.1 As defined in the relevant parts of the Rules, all spheroidal or nodular graphite iron castings subject to survey by the Register shall be manufactured and tested in accordance with the requirements of the following paragraphs. If the requirements of 3.1.2 are followed, castings may be manufactured according to international and national standards or works specifications.

3.9.1.2 These requirements are applicable to spheroidal or nodular graphite iron castings used in hull and ship machinery structures. The purpose of the castings shall be established proceeding from their properties at room temperature.

3.9.1.3 The requirements for castings intended for service at low or elevated temperatures shall be agreed as part of the submitted documentation. In this case, detailed information on the chemical composition, mechanical and special properties, heat treatment, methods and scope of testing the castings shall be submitted to the Register.

3.9.1.4 Castings subject to survey by the Register and produced in large quantities shall be manufactured at works recognized by the Register as specified in 1.3.1.2.

3.9.1.5 For removal of risers and for castings grinding the relevant metal machining methods may be used. The methods exerting a thermal effect on casting quality are not allowed with the exception of their use as preliminary before machining.

3.9.1.6 When finished, castings shall be free of defects unfavourably effecting their use and shall be in full compliance with the approved documentation for delivery.

3.9.2 Chemical composition.

3.9.2.1 The chemical composition is left to the discretion of the manufacturer who shall ensure that it is suitable for obtaining the mechanical properties specified for the castings.

Unless otherwise specified, the chemical composition of ladle analysis shall be reported.

3.9.3 Mechanical properties.

3.9.3.1 The mechanical properties of the castings shall conform to Table 3.9.3.1.

While effecting the tensile test of the casting material the tensile strength and elongation shall be determined.

The minimum required tensile strength shall be stated in the agreed technical documentation for the casting, but in no case shall it exceed the limits detailed in Table 3.9.3.1. Additional requirements of the relevant parts of the Rules are also to be complied with.

Where mechanical test results are unsatisfactory, retesting shall be conducted in compliance with the requirements of 1.3.4.2.

Table 3.9.3.1

Mechanical properties and structure of nodular graphite iron

Tensile strength[1] R_m, min, MPa		Yield stress $R_{p0,2}$, min, MPa	Elongation A_5, min, %	Brinell hardness	Impact energy		Structure[3]
					Test temperature, °C	KV [2], min, J	
Normal quality	370	230	17	120 — 180	–	–	
	400	250	15	140 — 200	–	–	Ferrite
	500	320	7	170 — 240	–	–	Ferrite/Pearlite
	600	370	3	190 — 270	–	–	Ferrite/Pearlite
	700	420	2	230 — 300	–	–	Pearlite
	800	480	2	250 — 350	–	–	Pearlite structure or structure after tempering
Special quality	350	220	22[4]	110 — 170	+20	17 (14)	Ferrite
	400	250	18[4]	140 200	+20	14 (11)	Ferrite

[1] For intermediate tensile strength values the minimum values of elongation and upper yield stress may be determined by linear interpolation.
[2] When tests are carried out on three Charpy V-notch type test specimens, the impact energy mean value is given. It is allowed to lower the impact energy value for one of the three test specimens in comparison with data in Table, but not less than given in brackets.
[3] Data for consideration.
[4] When tensile tests are carried out on test specimens out of cast-on samples, the ultimate values of elongation may be lowered by 2 % of the given value.

3.9.3.2 Where impact testing is required, the standards and type of specimen shall be approved by the Register.

3.9.3.3 The microstructure of the castings shall include not less than 90 % of spheroidal or nodular graphite. No flaked graphite is permitted.

3.9.4 Heat treatment.

3.9.4.1 The castings shall be supplied in either as the cast or heat treated condition.

The necessity of heat treatment and the relevant procedure shall be determined by the manufacturer on the basis of chemical composition, purpose and shape of the castings.

The heat treatment for stress relieving shall follow the heat treatment for structure refining and to procede the machining. Special quality castings having the tensile strength 350 and 400 MPa and the relevant necessary impact energy value shall undergo ferritizing.

3.9.4.2 Where it is proposed to locally harden the surfaces of a casting, full details of the proposed procedure and specification shall be submitted to the Register for consideration.

3.9.5 Sampling.

3.9.5.1 The samples may be either cast-on or separately cast. The dimensions of the samples, when cast separately, shall be in accordance with Figs. 3.9.5.1-1, 3.9.5.1-2 and 3.9.5.1-3 (dimensions are given in mm); the sample length *z* shall be chosen proceeding from the type of the machine for tensile testing.

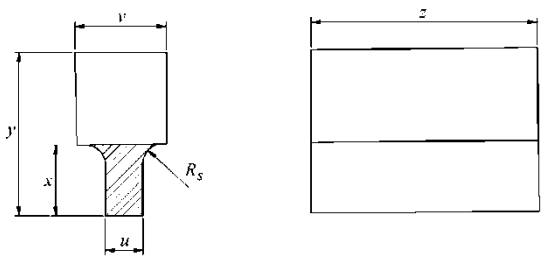

Fig. 3.9.5.1-1
Standard specimen and alternative specimens with dimensions:

Dimensions	Standard specimen	Alternative specimens		
u	25	12	50	75
v	55	40	90	125
x	40	30	60	65
y	100	80	150	165
z	to suit testing machine (for all specimens)			

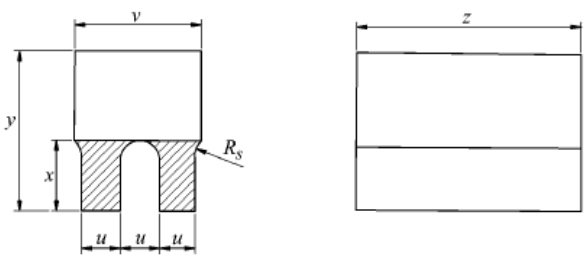

Fig. 3.9.5.1-2
Standard specimen with dimensions: *u* — 25; *v* — 90; *x* — 40; *y* — 100; z — to suit testing machine

The samples may have alternative dimensions or they may be taken directly from one of the castings forming the batch.

Thickness of the mould surrounding a standard specimen shall not be less than 40 mm, and for alternative samples, not less than 40, 60 and 80 mm respectively.

Where separately cast samples are used, they shall be cast in moulds made from the same type of material as used for the castings and shall not be stripped from the moulds until the sample metal temperature is below 500 °C.

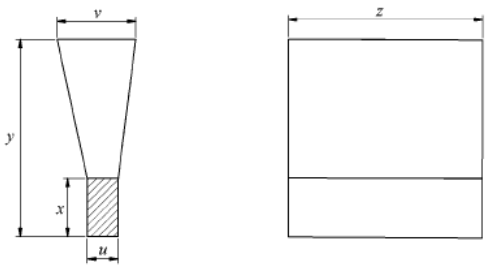

Fig. 3.9.5.1-3
Standard specimen and alternative specimens with dimensions:

Dimensions	Standard specimen	Alternative specimens		
u	25	12	50	75
v	55	40	90	125
x	40	30	50	65
y	140	135	150	175
z	to suit testing machine (for all specimens)			

3.9.5.2 When castings are supplied in the heat-treated condition, the samples shall be heat treated together with the castings, which they represent.

3.9.5.3 Samples for metallographic examination may conveniently be taken from the tensile test specimens, but separately cast samples may be prepared, provided that they are taken from the ladle towards the end of the casting period.

3.9.6 Scope of testing.

3.9.6.1 At least one sample shall be taken from each casting. If metal from several ladles is used for a casting, one sample shall be taken from each ladle.

3.9.6.2 A batch testing procedure may be adopted for castings with the fettled mass of 1 t or less. All castings in a batch shall be of similar type and dimensions, cast from the same ladle of treated metal. One separately cast sample shall be provided for each multiple of 2 t of fettled castings in the batch.

3.9.6.3 At least one tensile test specimen, shall be prepared from each sample according to 2.2.2.3 and, where required, a set of Charpy V-notch type test specimens for impact tests according to 2.2.3.1.

3.9.6.4 Where the castings are subject to pressure testing for tightness, both the working and test pressure shall be stated in the technical documentation.

3.9.7 Inspection.

The castings shall be submitted for inspection and control testing in cleaned and de-gated condition, free from risers, etc.

The castings shall be free from defects, which would be prejudicial to their application in service. In general, repairing of defects by welding is not permitted. Subject to approval by the surveyor, surface imperfections may be removed by grinding. Where there is reason to suspect the soundness of the casting, non-destructive testing may be required. Crankshafts shall undergo magnetic particle testing and metallographic examination.

3.9.8 Marking and documentation.

Identification, marking and issued documentation — in accordance with the requirements of 3.8.8.

3.10 GREY IRON CASTINGS

3.10.1 General.

3.10.1.1 All grey iron castings subject to survey by the Register, as defined in the relevant parts of the Rules, shall be manufactured and tested in accordance with the requirements of the following paragraphs.

3.10.1.2 The present requirements apply to grey iron castings used in hull and ship machinery structures.

3.10.1.3 Where castings of the same type are regularly produced in quantity, the manufacturer may adopt alternative procedures for, and scope of, testing, with the data verifying the continued efficiency of the manufacturing technique and the quality of castings submitted to the Register.

3.10.1.4 On condition that the requirements of 3.1.2 are followed, castings may be manufactured in compliance with national standards and works specifications.

3.10.1.5 Castings subject to survey by the Register and produced in large quantities shall be manufactured at works recognized by the Register as specified in 1.3.1.2.

3.10.2 Chemical composition.

The chemical composition is left to the discretion of the manufacturer, who shall ensure that it is suitable for obtaining the mechanical properties specified for the castings.

Unless otherwise specified, the chemical composition of ladle analysis shall be reported.

3.10.3 Mechanical properties.

When carrying out the tensile test of the casting material (according to 2.2.2.4) the tensile strength shall be determined. The specified minimum tensile strength shall be stated in the technical documentation for the casting, but in no case it shall be less than 200 MPa. Any additional requirements of the relevant parts of the Rules shall also be complied with.

Where tensile test results are unsatisfactory, retesting shall be conducted in compliance with the requirements of 1.3.4.2.

3.10.4 Heat treatment.

Castings may be supplied in either as the cast or heat treated condition.

The necessity of heat treatment and the relevant procedure shall be determined by the manufacturer on the basis of chemical composition, purpose and shape of the castings.

The heat treatment for stress relieving shall follow the heat treatment for structure refining and to precede the machining.

3.10.5 Sampling.

3.10.5.1 Unless otherwise agreed between the manufacturer and the customer, cast samples shall have the form of cylindrical bars 30 mm in diameter and of a suitable lenght. They shall be cast from the same ladle as the castings in moulds of the same type of material as the moulds for the castings and shall not be stripped from the moulds until the metal temperature is below 500 °C.

If two or more samples are cast in one mould at the same time, the rod diameter shall not be less than 50 mm and they shall be located as specified in Fig. 3.10.5.1 (dimensions are given in mm).

The samples of alternative dimensions may be used, they may be cast-on or taken directly from the castings.

As a rule, cast-on samples may be used if the casting wall thickness is over 20 mm and its mass exceeds 200 kg. In addition, the sample type and location shall ensure roughly the same cooling conditions similar to the base casting cooling and are subject to the manufacturer's agreement with a customer.

3.10.5.2 Where castings are supplied in the heat treated condition, the samples shall be heat treated together with the castings, which they represent.

3.10.5.3 One tensile test specimen shall be prepared from each sample.

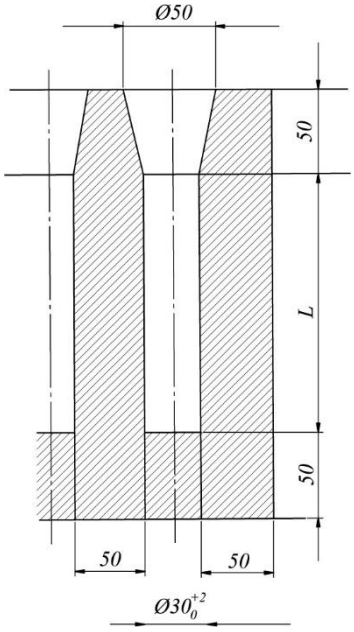

Fig. 3.10.5.1

3.10.6 Scope of testing.

3.10.6.1 From each casting at least one sample shall be taken. Where metal from several ladles is used for a casting, one sample shall be taken from each ladle.

3.10.6.2 All castings in the batch shall be of similar type and dimensions, and cast from the same ladle of metal. As rule, the batch mass shall not exceed 2 t of fettled castings; separate castings with a mass equal to or over 2 t also form a batch.

At continuous casting of iron of the very same grade and in large quantities, the batch mass may be limited by the metal cast within two hours.

The batch volume and number of samples taken are subject to an agreement with the Register.

3.10.6.3 Where the castings are subject to pressure testing for tightness, both the working and test pressure shall be stated in the technical documentation.

3.10.7 Inspection.

The castings shall be submitted for inspection and control testing in cleaned and de-gated condition, free from risers, etc.

The castings shall be free from defects, which would be prejudicial to their proper application in service. In general, repairing of defects by welding is not permitted. At the discretion of the surveyor, small surface blemishes may be removed by local grinding. Where these is reason to suspect the soundness of the casting, non-destructive testing may be required.

3.10.8 Marking and documentation.

Identification, marking and issued documentation — in accordance with the requirements of 3.8.8.

3.11 MALLEABLE CAST IRON

3.11.1 General.

Malleable cast iron may be used for the manufacture of parts for hull and ship machinery structures that are subject to survey by the Register and are intended to operate at a temperature not exceeding 300 °C and the working pressure not exceeding 2 MPa.

3.11.2 The castings of malleable cast iron shall be produced in accordance with international and national standards or works specifications. Castings of malleable cast iron produced in large quantities shall be manufactured at works recognized by the Register as specified in 1.3.1.2.

3.11.3 Chemical composition and mechanical properties.

The chemical composition, mechanical properties and scope of testing of items made of malleable cast iron shall comply with the requirements of the documentation agreed with the Register.

3.11.4 Marking and documentation.

Identification, marking and issued documentation — in accordance with the requirements of 1.4.

3.12 STEEL CASTINGS FOR PROPELLERS

3.12.1 General.

3.12.1.1 These requirements apply to inspection and repair procedures of steel castings for propellers, blades and bosses (hubs) during their manufacture.

These requirements may also be used for the repair of propellers damaged in service, subject to prior agreement with the Register.

The use of steel that is different in chemical composition, mechanical properties or heat treatment for propellers is permitted according to standards, specifications or other technical requirements recognized by the Register.

3.12.1.2 Propeller castings and their components (blades and bosses) shall be manufactured by the works recognized by the Register in accordance with 1.1.4 and 1.3.2. The manufacturing specification, description of the foundry facilities, specifications for material, the description of a technological process, repair and inspection shall be submitted to the Register at the time of approval. Castings supplied under the Register technical supervision shall be manufactured and tested in accordance with the requirements of this Chapter.

3.12.1.3 Recognizing the works, tests are conducted in accordance with 1.3.1.2 on the basis of the survey and tests program approved by the Register. The tests shall confirm the compliance of the chemical composition and the mechanical properties of castings material and their quality with these requirements. The scope of the approval test shall be agreed with the Register.

3.12.1.4 A foundry shall have an adequately equipped laboratory manned by experienced qualified personnel. The laboratory shall have at its disposal everything necessary for the performance of non-destructive testing. However, if the laboratory is unable to conduct tests and inspection, the data on an independent laboratory shall be submitted to the Register. The laboratory shall be recognized by the competent national body and/or Register.

3.12.1.5 Where the use of alternative alloys other than specified in this Chapter is proposed, particulars of chemical composition, mechanical properties and heat treatment shall be submitted to the Register for approval.

3.12.1.6 It is the manufacturer's responsibility to assure that effective quality, process and production controls during manufacturing are adhered to within the manufacturing specification.

3.12.2 Chemical composition.

The chemical composition of the steel for propellers shall meet the requirements of Table 3.12.2. The alloys in Table are subdivided into four main groups. Manufacture and application of steel castings for propellers whose chemical composition deviate from the typical values of the Chapter shall be specially approved by the Register.

Table 3.12.2

Chemical composition of steel castings for propellers[1]

Steel grade and type	C, max, %	Mn, max, %	Cr, %	Mo, max, %	Ni, %
Martensitic (12Cr1Ni)	0,15	2,0	11,5 — 17,0	0,5	≤ 2,0
Martensitic (13Cr4Ni)	0,06	2,0	11,5 — 17,0	1,0	3,5 — 5,0
Martensitic (16Cr5Ni)	0,06	2,0	15,0 — 17,5	1,5	3,5 — 6,0
Austenitic (19Cr11Ni)	0,12	1,6	16,0 — 21,0	4,0	8,0 — 13,0

[1] The minimum elements content not specified in Table shall meet the requirements of agreed national or international standards.

The manufacturer shall maintain records of the chemical analyses of the production casts, which shall be made available to the RS surveyor so that they can satisfy themselves that the chemical composition of each casting is within the specified limits.

3.12.3 Mechanical properties and heat treatment.

3.12.3.1 The mechanical properties of steel during the testing of specimens prepared from samples cast-on to the boss or blade shall meet the requirements of Table 3.12.3.1. The thickness of test coupon shall be in accordance with agreed standards.

Table 3.12.3.1

Mechanical properties of steel castings for propellers

Steel grade and type	Yield stress $R_{p0,2}$, min, MPa	Tensile strength R_m, min, MPa	Elongation A_5, min, %	Reduction of area Z, min, %	Impact test[1] *KV*, min, J
Martensitic (12Cr1Ni)	440	590	15	30	20
Martensitic (13Cr4Ni)	550	750	15	35	30
Martensitic (16Cr5Ni)	540	760	15	35	30
Austenitic (19Cr5Ni)	180 ($R_{p1,0}$ 205)	440	30	40	–

[1] The impact test is not required for ice class ships of **Ice1**, **Ice2** and **Ice3**; for all other ice class ships and for icebreakers, steel castings shall be impact-tested at –10 °C.

3.12.3.2 The level of mechanical properties of the separately cast samples metal is subject to the approval by the Register.

3.12.3.3 Heat treatment.

Castings of martensitic class steel shall be subjected to austenization and tempering. Austenitic class steels shall be subjected to solution treatment.

3.12.4 Sampling.

3.12.4.1 Samples may be taken immediately from a casting or gated to it. Test specimens, where possible, are taken from the cast-on sample in the area within 0,5*R* to 0,6*R* (where *R* is a propeller radius). The use of separately cast samples for machine specimens shall be specified in the approved documentation.

3.12.4.2 Separately cast samples shall be taken from the same ladle as the casting as the metal presented and heat treated in the same furnace charge.

In the initial survey of works in accordance with 3.12.1.2, tests may be conducted in the metal of both separately cast and cast-on samples or taken directly from a casting body.

3.12.4.3 Samples shall not be taken from a casting prior to a final heat treatment. Samples are prepared in accordance with the standards recognized by the Register.

3.12.4.4 Thermal methods shall not be used for sampling.

3.12.5 Scope of testing.

3.12.5.1 At least one tensile test specimen (refer to Table 2.2.2.3) and one set of impact test specimens (refer to 2.2.3) shall be taken from each cast presented. In tensile tests, the tensile strength, proof stress, elongation and reduction in area are determined. Test are conducted in compliance with the requirements of 2.2.

3.12.5.2 Test specimens shall generally be cut out from cast-on samples. If castings are roughly of the same size, less than 1 m in diameter made from metal of one cast and heat treated in one furnace charge, one set of specimens for each 5 castings may be taken from separately cast samples of the relevant dimensions.

3.12.6 Severity zones (repair zones).

3.12.6.1 In order to define the criteria of assessment for propeller defects and to help reduce the risk of failure by fatigue cracking after repair, the blade surface is divided into three zones designated *A*, *B* and *C* (refer to Figs. 4.2.6.2-1 and 4.2.6.3). The definitions of repair zones are given in 4.2.6.2 and 4.2.6.3.

3.12.6.2 The definition of a skew angle — refer to 4.2.6.1 (Note) and Fig. 4.2.6.1.

3.12.7 Inspection.

3.12.7.1 Propeller castings shall be visually tested and measured by the manufacture at all the stages of their manufacture. The castings shall be subjected to a thorough 100 % visual testing in the finished condition. A general visual examination shall be carried out by the RS surveyor. A surface shall be free from the defects, which may result in propeller damages during operation. The Register representative can demand the performance of investigation of questionable surface sections including metal etching, particularly prior to repair welding.

Casting defects which may impair the serviceability of the castings, e.g. major non-metallic inclusions, shrinkage cavities, blow holes and cracks, are not permitted. They may be removed by one of the methods described in 3.12.9 and repaired within the limits and restrictions for the

severity zones. Full description and documentation shall be available for the Register representative before commencement of works.

Minor casting defects which may still be visible after machining such as small sand and slag inclusions, small cold shuts and scabs shall be trimmed off by the manufacturer in accordance with 3.12.9.

3.12.7.2 The verification of dimensions, the dimensional and geometrical tolerances is the responsibility of the manufacturer. The report on the relevant examinations shall be submitted to the Register. At that, the Register may require the examination to be made in the presence of the RS surveyor.

In accordance with the requirements of the Register-approved documentation, all propellers shall be subjected to static balancing. Dynamic balancing is required for propellers running with a rotational speed of over 500 rpm.

3.12.8 Non-destructive testing.

Special requirements for testing laboratories carrying out penetrant testing (PT), ultrasonic testing (UT) and magnetic particle (MT) testing are specified in 10.3, Part I "General Regulations for Technical Supervision" of the Rules for Technical Supervision during Construction of Ships and Manufacture of Materials and Products for Ships.

3.12.8.1 All the castings of propellers shall be subjected to non-destructive testing. A manufacturer shall have available an appropriate system to record all the non-destructive testing results for each casting. The Register representative shall be familiarized with that system and the results of the testing carried out. The manufacturer duty shall confirm in the documentary form the true performance and the positive results of non-destructive testing methods.

3.12.8.2 Penetrant and magnetic particle testing.

3.12.8.2.1 Liquid penetrant testing procedure shall be submitted to the Register and shall meet the requirements of ISO 3452-1:2013 or an RS-agreed standard. The acceptance criteria are specified in 3.12.8.2.3. For all propellers, cast blades and bosses, the surfaces covered by severity zones *A*, *B* and *C* shall be liquid penetrant tested. Testing of zone *A* shall be undertaken in the presence of the RS surveyor, whilst testing of zone *B* and *C* may be witnessed by the RS surveyor upon request of the Register.

If repairs have been made either by grinding or by welding, the repaired areas shall additionally be subjected to the liquid penetrant testing independent of their location. Weld repairs shall, independent of repair location, always be assessed according to zone *A*.

3.12.8.2.2 Magnetic particle method may be applied instead of penetrant testing when testing martensitic steels.

Magnetic particle testing procedure shall comply with ISO 9934-1:2016 or the agreed standard. The procedure shall be submitted to the Register for approval.

3.12.8.2.3 Acceptance criteria for liquid penetrant testing and magnetic particle testing.

3.12.8.2.3.1 Definitions of liquid penetrant testing:

Indication is the presence of detectable bleed-out of the penetrant liquid from the material discontinuities appearing at least 10 min after the developer has been applied.

Relevant indication is indication which has any dimension greater than 1,5 mm when categorization of indications is performed.

Non-linear indication is an indication with a largest dimension less than three times its smallest dimension (i.e. $l < 3w$).

Linear indication is an indication with a largest dimension three or more times its smallest dimension (i.e. $l \geq 3w$).

Aligned indication is considered to be a unique indication and its length is equal to the overall length of the alignment. The aligned indication may have the following structure:

three or more non-linear indications aligned with the distance between indications less than 2 mm; or

linear indications aligned with the distance between two indications smaller than the length of the longest indication.

Illustration of liquid penetrant indications is given in Fig. 3.12.8.2.3.1.

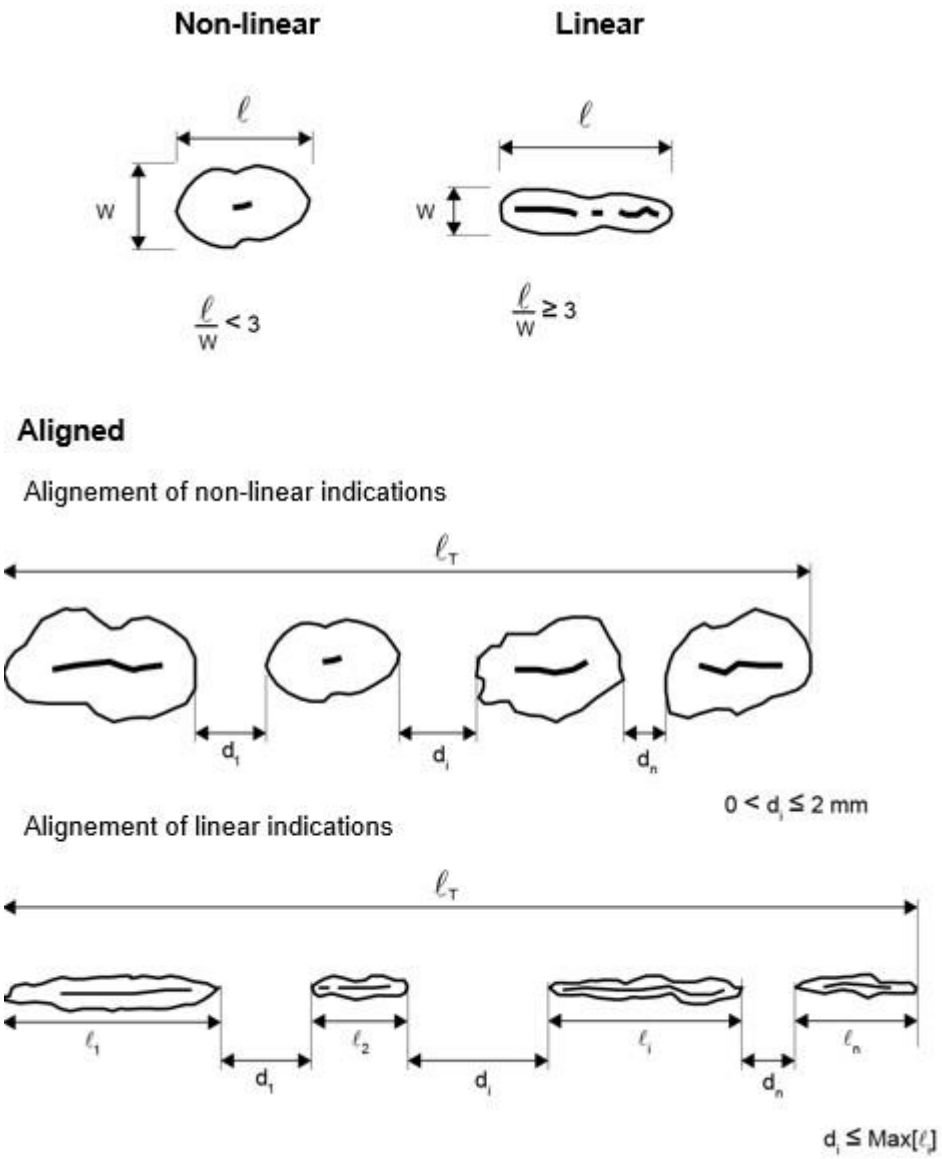

Fig. 3.12.8.2.3.1

3.12.8.2.3.2 Acceptance criteria.

Reference area is of 100 cm^2 and may have square or rectangular shape with the major dimension not exceeding 250 mm. In evaluation of surface quality by penetrant testing, the entire controlled surface is conventionally divided in reference areas of 100 cm^2 each. Segmentation shall be the most unfavourable in relation to indications, i.e. the shape and dimensions of each reference area shall be chosen so that it covers the maximum number of defects without their distribution among adjacent reference areas.

The relevant indications, with respect to their shape, dimensions and number, shall meet the requirements of Table 3.12.8.2.3.2.

Table 3.12.8.2.3.2

Allowable number and size of indications depending on severity zone

Severity zone	Total number of indications, max	Indication type	Number of indications of each type, max	Indication size, mm, max
A	7	non-linear	5	4
		linear	2	3
		aligned	2	3
B	14	non-linear	10	6
		linear	4	
		aligned	4	
C	20	non-linear	14	8
		linear	6	6
		aligned	6	6

Notes: 1. Singular non-linear indications less than 2 mm in zone *A* and less than 3 mm in other zones may be disregarded.
2. The total number of non-linear indications may be increased to the total allowable number of all type indications, represented by the absence of linear or aligned indications.

3.12.8.3 Radiographic and ultrasonic testing.

When required by the Register or when deemed necessary by the manufacturer, further non-destructive testing (e.g. radiographic and/or ultrasonic testing) shall be carried out. The evaluation and acceptance criteria shall be agreed between the manufacturer, the customer and the Register and shall meet the requirements of standards agreed by the Register.

Ultrasonic testing may not be practical in some cases, depending on the shape, type and thickness, as well as grain-growth direction of the casting, negatively impacting absorption of ultrasound.

3.12.9 Repair of defects.

3.12.9.1 Surface discontinuities, which impair propellers performance, shall be repaired by mechanical methods, e.g. by grinding, chipping and milling. Complete elimination of the defective material shall be verified by liquid penetrant testing or magnetic particle testing. The use of welding to repair defects is allowed only in justified cases to be agreed with the Register representative.

The repair of defects shall be carried out after producing the documentation with the full description of works to be conducted, to the Register representative. The relevant repair zones, dimensions and location of defects, methods of their repair and inspection shall be specified.

After milling or chipping, grinding shall be applied for such defects, which shall not be welded. The grinding shall be carried out in such a manner that the contour of the ground depression is as smooth as possible to avoid stress concentration and/or minimize cavitation corrosion. The metal for welding shall be properly selected and shall have the shape and dimensions needed for welding. The welding of areas less than 5 cm^2 shall be avoided.

3.12.9.2 Repair of defects in zone *A*.

In zone *A*, repair welding is not allowed.

Grinding in zone *A* may be carried out to the extent, which maintains the blade thickness of the drawing approved by the Register. The possible repair of defects by methods not specified here shall be approved as part of the submitted documentation.

3.12.9.3 Repair of defects in zone *B*.

The defects that are not deeper than $dB = t/40$ (t = minimum local thickness) or 2 mm (whichever is greater) may be removed by grinding. The defects, which are deeper than allowable for removal by grinding, may be repaired by welding.

3.12.9.4 Repair of defects in zone *C*.

In zone *C*, repair welds are generally permitted.

3.12.9.5 Repair welding.

3.12.9.5.1 General provisions and documentation.

The welding procedure and welding consumables used for defects repair shall be recognized by the Register in accordance with the requirements of Part XIV "Welding".

The manufacturer shall maintain records of defects based on which any scope of repair, heat treatment type and mode may be traced for each casting. Full details on casting subject to survey by the Register shall be submitted to the RS surveyor.

Prior to the beginning of works on the repair of defects by welding, the detailed specification of a welding procedure, which shall include data on the welding position, welding process parameters, welding consumables, preheating, follow-up heat treatment and inspection of welding operations conducted shall be submitted to the Register for approval.

3.12.9.5.2 Welding repair procedure.

3.12.9.5.2.1 The approval of a welding procedure is carried out in accordance with the requirements of Section 6, Part III "Technical Supervision during Manufacture of Materials" of the Rules for Technical Supervision during Construction of Ships and Manufacture of Materials and Products for Ships following the Register-approved program.

Defects shall be repaired in accordance with the approved welding procedures and by welders qualified to an agreed standard. Welding Procedure Qualification Tests shall be carried out under technical supervision of the RS surveyor and shall meet the requirements of 3.12.9.5.3.

Defects to be repaired by welding shall be ground to sound material.

The welding grooves shall be prepared in such a manner which will allow a good fusion of the groove bottom.

The resulting ground areas shall be examined in the presence of the RS surveyor by liquid penetrant testing. The results shall demonstrate the complete elimination of defective material.

3.12.9.5.2.2 Welding shall be done under controlled conditions free from draughts and adverse weather.

3.12.9.5.2.3 Metal arc welding with electrodes or filler wire used in the procedure tests shall be used. The welding consumables shall be stored and handled in accordance with the manufacturer's recommendations.

3.12.9.5.2.4 Slag, undercuts and other defects shall be removed before depositing the next run.

3.12.9.5.2.5 The martensitic steels shall be furnace re-tempered after weld repair. Methods of local stress relieving for minor repairs shall be agreed as part of the repair documentation.

3.12.9.5.2.6 On completion of heat treatment the weld repairs and adjacent material shall be ground smooth. All weld repairs shall be liquid penetrant tested.

3.12.9.5.3 Welding procedure qualification test for repair.

3.12.9.5.3.1 General.

Requirements for qualification tests of welding procedures intended for the repair of cast steel propellers are specified below.

For the welding procedure approval, the welding procedure qualification tests shall be carried out with satisfactory results.

The qualification tests shall be carried out with the same welding process, filler metal, preheating and stress-relieving treatment as those intended applied by the actual repair work. Welding procedure specification (WSP) shall refer to (or contain) the test results achieved during welding procedure qualification testing.

Welding procedures approved by the Register for the specified manufacturer may be applied for all workshops under the same repair procedure and quality management system.

3.12.9.5.3.2 Welding of samples.

The approval of a welding procedure shall be based on the welding of samples consisting of cast samples with size sufficient to ensure a reasonable heat distribution. Minimum sample dimensions shall comply with Fig. 3.12.9.5.3.2.

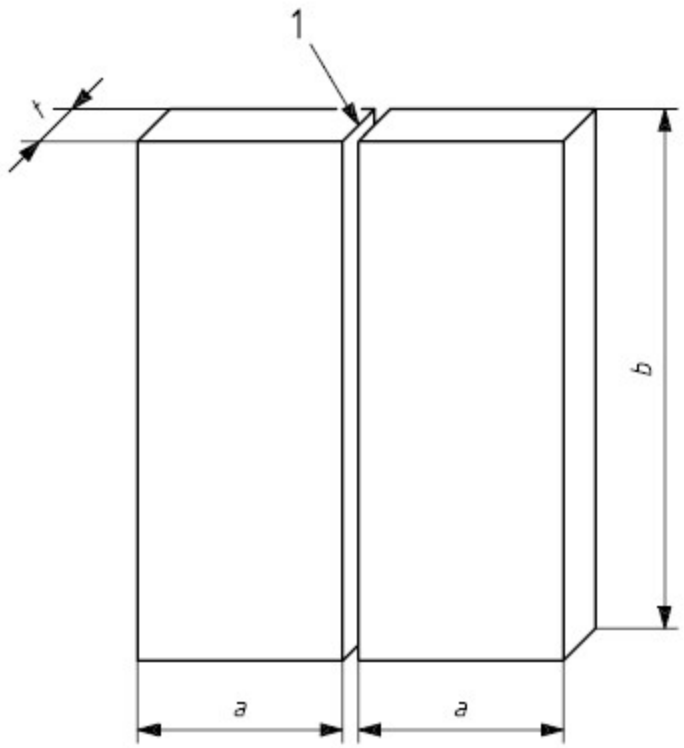

Fig. 3.12.9.5.3.2
1 — joint preparation and fit-up as detailed in the preliminary welding procedure specification;
a — minimum width of the sample 150 mm;
b — minimum length of the sample 350 mm;
t — sample thickness.

The dimensions, shape of the groove, preparation and welding of test pieces shall be carried out in accordance with the general condition of the firm's repair welding work which shall be presented to the RS surveyor upon request.

Welding of the test assemblies and testing of test specimens shall be witnessed by the RS surveyor.

3.12.9.5.3.3 Examination and tests of the welded joint.

Test assembly received from sample shall be examined in accordance with Table 3.12.9.5.3.3-1. Specimen cutout procedure is given on the Fig. 3.12.9.5.3.3.

Table 3.12.9.5.3.3

Type of tests and extent of testing

Type of test	Extent of testing
Visual testing	100 % in accordance with 3.12.9.5.3.3.1
Liquid penetrant testing[1]	100 % in accordance with 3.12.9.5.3.3.1
Transverse tensile test	Two specimens in accordance with 3.12.9.5.3.3.2
Bend test	Two root and two face specimens in accordance with 3.12.9.5.3.3.3[2]
Macro examination	Three specimens in accordance with 3.12.9.5.3.3.4
Impact test	Two sets of specimens in accordance with 3.12.9.5.3.3.5
Hardness test	In accordance with 3.12.9.5.3.3.6

[1] Magnetic particle testing may be used in lieu of liquid penetrant testing for martensitic stainless steels.
[2] For samples with *t* ≥12mm, the face and root bend may be substituted by 4 side bend test specimens.

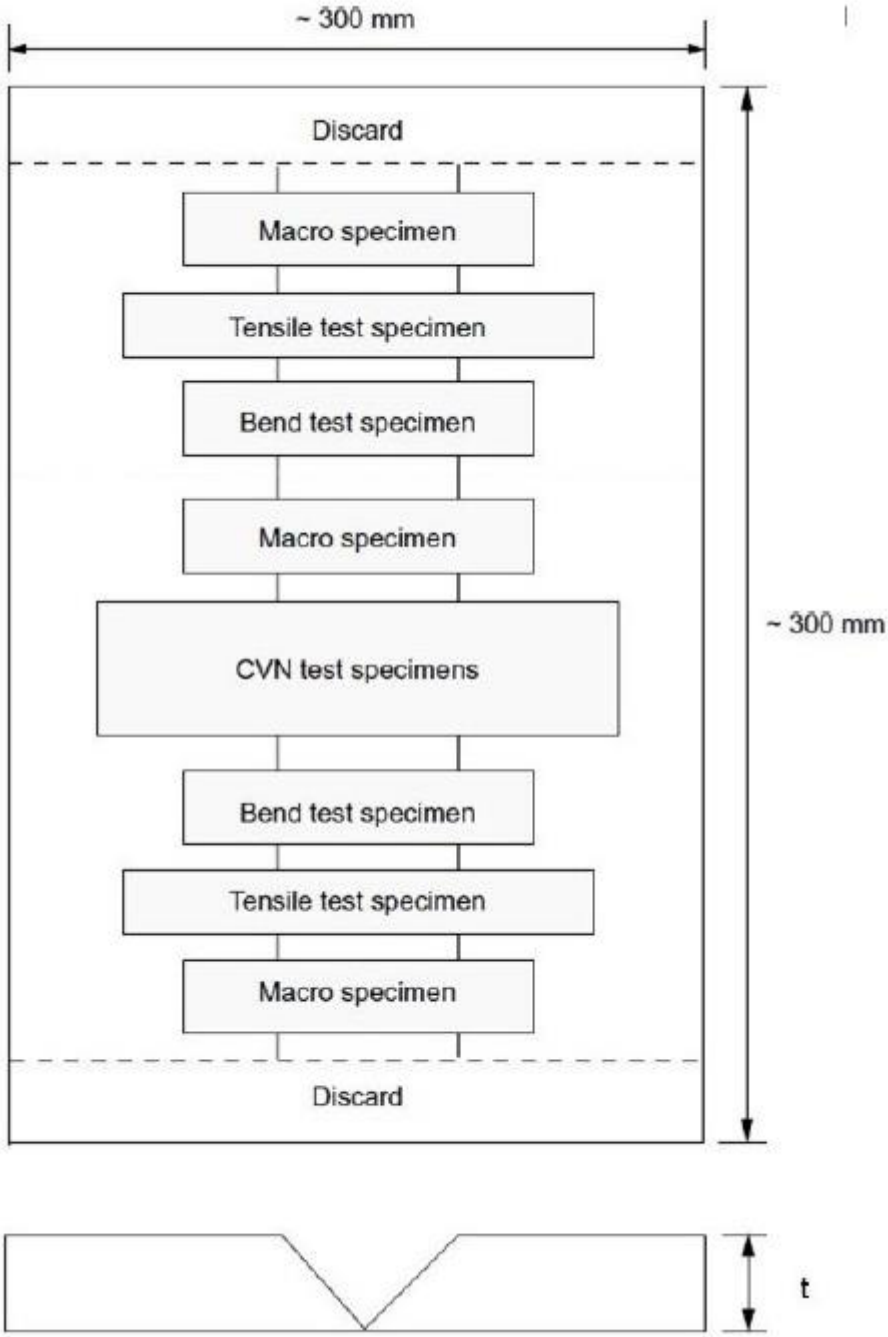

Fig. 3.12.9.5.3.3

3.12.9.5.3.3.1 Examination and non-destructive testing.

Test assembly shall be examined by visual and liquid penetrant testing or magnetic particle testing after welding and prior to the cutting of test specimen. In case, that any post-weld heat treatment is required or specified, non-destructive testing shall be performed after heat treatment.

No cracks are permitted. Procedure for detection of imperfections by liquid penetrant testing or magnetic particle testing is specified in 3.12.8.2.3.

3.12.9.5.3.3.2 Tensile testing.

Tests are carried out on two transverse specimens, which thickness in equal to that of a sample, the width is 30 mm and the parallel test length is equal to the weld width plus 6 mm to each side (refer to 4.2.3.2.2, Part XIV "Welding"). Alternatively, tensile test specimens manufactured in accordance with the agreed standards may be used. Mechanical properties shall meet those required for the base metal.

The fracture area, weld metal, heat-affected zone or base metal shall be in a test report.

3.12.9.5.3.3.3 Bend testing.

The tests are conducted on two transverse specimens from root and from its opposite surface of butt joint (4 samples in total) made in accordance with the requirements of 2.2.5.1. The test is conducted on a mandrel four thickness in diameter except for austenitic steels, in which case the mandrel diameter shall be equal to three thicknesses.

The bending angle shall be 180°. After the tests, the specimen surface shall be free from tension fractures and cracks of more than 3 mm long. Defects appearing at the corners of a test specimen during testing shall be investigated separately.

For thickness 12 mm and over, four side bend specimens may alternatively be tested.

3.12.9.5.3.3.4 Macro examination.

Macro examination is carried out on two macro-sections etched on one side to clearly reveal the weld metal, the fusion line, and the heat affected zone. Cracks, pores, slag inclusions and other imperfections greater than 3 mm are not permitted.

3.12.9.5.3.3.5 Impact testing.

The tests are required for cases when a base metal was subjected to these tests. Where necessary, impact tests are conducted on specimens made in accordance with 2.2.3 and Fig. 2.2.3.1-2.

The tests shall be conducted on one set of specimens notched in the weld centre and on another one notched in the HAZ (i.e. the mid-point of the notch shall be at 1 mm to 2 mm from the fusion line to the base metal).

The temperature and results of the tests shall meet those required for the base metal.

3.12.9.5.3.3.6 Hardness testing

The macro-section representing the start of welding shall be used for Vickers hardness testing (HV 10). Indentations shall traverse 2 mm below the surface. Three measurements each are, as a minimum, made on the weld metal, heat-affected zone, at both sides of a weld and in the base metal. The measurements shall be presented for information in a test report.

3.12.9.5.3.3.7 Re-testing.

In case of unsatisfactory results of the above-mentioned tests, repeat testing may be conducted in accordance with 6.5, Part III "Technical Supervision during Manufacture of Materials" of the Rules for Technical Supervision during Construction of Ships and Manufacture of Materials and Products for Ships.

3.12.9.5.3.4 Test records.

3.12.9.5.3.4.1 Welding conditions for test assemblies and test and examination results shall be recorded in welding procedure qualification records. Welding Procedure Approval Test Certificate (form 7.1.33, pages 3 — 9) or other specification regulated by the relevant standards may be used as a record form.

3.12.9.5.3.4.2 A statement of the results of assessing each test piece, including repeat tests, shall be made for each welding procedure qualification records. The relevant items listed for the WPS shall be included in the test report.

3.12.9.5.3.4.3 The welding procedure qualification records shall be signed and stamped by the RS surveyor attending the tests.

3.12.9.5.3.5 Range of approval.

3.12.9.5.3.5.1 General.

Requirements specified in 3.12.9.5.3.5 shall be fulfilled independently of each other.

Welding procedure approved by the Register for the specified manufacturer may be applied for all workshops having the same repair procedure and quality management system.

3.12.9.5.3.5.2 Base metal.

Range of approval of welding procedure is limited to steel grade tested.

3.12.9.5.3.5.3 Thickness.

The qualification of a WPS carried out on a weld assembly of thickness *t* is valid for the thickness range given in accordance with Table 3.12.9.5.3.5.3.

Table 3.12.9.5.3.5.3

Range of qualification for thickness

Thickness of the test piece, *t* (mm)	**Range of approval**
15 < *t* ≤ 30	3 mm to 2*t*
30 < *t*	0,5*t* to 2*t*, or 200 mm, whichever is greater

3.12.9.5.3.5.4 Welding process parameters.

Approval for a test made in any position is restricted to that position.

The approval is only valid for the welding process used in the welding procedure test. Single run test results are not valid for multi-run butt weld test applied in accordance with this Chapter.

The approval is only valid for the filler metal used when taking the sample specimens.

The upper limit of heat input approved is 15 % greater than that used in welding the test piece. At that, the lower limit of heat input approved shall be 15 % lower than that used in welding the test piece.

The approved minimum preheating temperature shall not be less than that obtained when taking the test piece.

The approved maximum interpass temperature shall not be higher than that obtained in welding the test piece.

The heat treatment used for test pieces shall be specified in WPS. Holding time at a specified temperature may be adjusted as a function of thickness.

3.12.10 Identification and marking.

3.12.10.1 Identification.

The manufacturer shall adopt a system for the identification of all castings enabling the material to be traced to its original cast. The RS surveyor shall be given full facilities for so tracing the castings in accordance with the applied system, when required.

3.12.10.2 Marking.

A casting shall be properly marked prior to its presentation in the finished condition to the Register representative. In addition to specified in 1.4, the marking shall include the following data:

casting number and other designations allowing tracing all the stages of manufacture;

grade of cast material or corresponding abbreviated designation;

number of the Register Certificate;

skew angle (for high-skew propellers);

ice class symbol, where applicable;

date of casting acceptance.

The Register stamp shall be put on following the final survey and the acceptance of a casting.

3.12.10.3 Manufacturer's Certificate.

The Manufacturer's Certificate for a casting shall be submitted to the Register representative simultaneously with the presentation of the casting in the finished condition or in good time. The Certificate shall be verified by the quality service of a works and witnessed by the person authorized for this by the works. The Certificate shall contain the following data:

manufacturer's name and order number;

shipbuilding project number, if known;

description of the casting with drawing number;

propeller diameter, number of blades, pitch and directions of turning;

final weight;

grade and type of alloy, number of a cast and chemical composition;

identification number;

heat treatment schedule;

results of mechanical tests;

result of non-destructive testing and details of test procedure, when applicable.

3.12.10.4 The Register Certificate.

Each casting or the batch of small castings shall be accompanied with the Register Certificate. In addition to the special number, the requisites of the Register representation or

location, the place and date of issue, the Register Certificate is, as a minimum, to contain the following data:

manufacturer's name and order number;

shipbuilding project number, if known;

number of the certificate of quality of the casting manufacturer;

final weight;

identification number and casting number;

drawing number.

The Manufacturer's Certificate shall be the mandatory appendix to the Register Certificate. Test protocols witnessed by the Register representative may also be part of the appendix to the Register Certificate on the purchaser's demand.

3.13 HIGH STRENGTH STEEL FOR WELDED STRUCTURES

3.13.1 General.

The present requirements apply to hot-rolled, fine-grain, weldable plates and wide flats of high strength steel subject to the survey by the Register during manufacture and intended for use in sea-going ships and in MODU/FOP.

Proceeding from the minimum yield stress guaranteed the steel is divided into eight strength levels: 420, 460, 500, 550, 620, 690, 890 and 960 MPa. For each yield strength level grades A, D, E and F are conventionally specified, based on the impact test temperature, except for yield strength level of 890 and 960 MPa for which grade F is not applicable.

The requirements for the hot-rolled products with thickness of 15 mm or less designed for operation at low temperatures are specified in 3.5.4. High strength steel is manufactured at works recognized according to 1.3.1.2.

The attention of the consumers shall be drawn to the fact that when material fatigue loading is present, the effective fatigue strength of a welded joint of high strength steel may not be greater than that of a welded joint in normal strength steels.

Before subjecting steels produced by thermomechanical rolling to further heating for forming or stress relieving, or using high heat-input welding, special consideration shall be given to the possibility of a consequent reduction in mechanical properties.

3.13.2 Steel making process.

Vacuum degassing shall be used for any of the following:

all steels with enhanced through-thickness properties;

all steels of grades 690, 890 and 960.

The steel shall be fully killed, fine grain treated and shall have fine grain structure. The fine grain practice is to be as detailed in the approved manufacturing specification.

A fine grain structure has an equivalent index ≥6 determined by micrographic examination in accordance with ISO 643 or alternative national or international test method agreed with the Register.

The steels shall contain nitrogen binding elements as detailed in the manufacturing specification. Also refer to Table 3.13.3.1.

3.13.3 Chemical composition.

3.13.3.1 The chemical composition of steel shall be determined by the manufacturer from each cast or ladle in an adequately equipped laboratory. The chemical composition of steel shall be in accordance with the specification approved by the Register and the limiting values given in Table 3.13.3.1.

3.13.3.2 The content of elements used for alloying, nitrogen binding, and fine grain treatment, and as well as the residual elements shall be detailed in the manufacturing specification. For example, when boron is intentionally added for enhancement of hardenability of the steels, the maximum boron content shall not be higher than 0,005 %.

The result of the analysis of such elements content shall be reported.

3.13.3.3 The carbon equivalent value shall be calculated from the ladle analysis. Maximum values are specified in Table 3.13.3.3. Calculation formulas are given below:

for all steel grades the following formula may be used:

$$C_{eq} = C + \frac{Mn}{6} + \frac{Cr+Mo+V}{5} + \frac{Ni+Cu}{15} \ (\%) \qquad (3.13.3.3\text{-}1)$$

for steel grades H460 and higher, *CET* may be used instead of C_{eq} at the discretion of the manufacturer, and shall be calculated according to the following formula:

$$CET = C + \frac{Mn+Mo}{10} + \frac{Cr+Cu}{20} + \frac{+Ni}{40} \qquad (3.13.3.3\text{-}2)$$

N o t e . The *CET* is included in the standard EN 1011-2:2001 used as one of the parameters for preheating temperature determination, which is necessary to avoid cold cracking.

Table 3.13.3.1

Chemical composition of high strength steel

Delivery condition[1]	N/NR		TM		QT	
Steel grade	A420N/NR D420N/NR A460N/NR D460N/NR	E420N/NR E460N/NR	A420TM D420TM A460TM D460TM A500TM D500TM A550TM D550TM A620TM D620TM A690TM D690TM A890TM	E420TM F420TM E460TM F460TM E500TM F500TM E550TM F550TM E620TM F620TM E690TM F690TM D890TM E890TM	A420QT D420QT A460QT D460QT A500QT D500QT A550QT D550QT A620QT D620QT A690QT D690QT A890QT A960QT	E420QT F420QT E460QT F460QT E500QT F500QT E550QT F550QT E620QT F620QT E690QT F690QT D890QT E890QT D960QT E960QT
Chemical Composition, %[2]						
C_{max}	0,20	0,18	0,16	0,14	0,18	
Mn	1,0~1,70				1,70	
Si_{max}	0,60				0,80	
P_{max}[3]	0,030	0,025	0,025	0,020	0,025	0,020
S_{max}[3]	0,025	0,020	0,025	0,010	0,015	0,010
Al_{total} min[4]	0,02				0,018	
Nb_{max}	0,05				0,06	
V_{max}[5]	0,20		0,12		0,12	
Ti_{max}[5]	0,05				0,05	
Ni_{max}[6]	0,80		2,00		2,00	
Cu_{max}	0,55				0,50	
Cr_{max}	0,30		0,50		1,50	
Mo_{max}[5]	0,10		0,50		0,70	
N_{max}	0,025				0,015	
Oxygen ppm_{max}[7]	–		–	50	–	30

1 Refer to 3.13.4 for definition of delivery conditions.
2 The chemical composition is to be determined by ladle analysis and shall meet the approved manufacturing specification at the time of approval.
3 For sections the P and S content can be 0.005% higher than the value specified in the table.
4 The total aluminium to nitrogen ratio shall be a minimum of 2:1 in case no other nitrogen binding elements are used.
5 Total Nb+V+Ti ≤ 0.26% and Mo+Cr ≤ 0.65%, not applicable for QT steels.
6 Higher Ni content may be approved at the discretion of the Register.
7 The requirement on maximum Oxygen content is only applicable to PCD890, PCE890, PCD960 and PCE960.

for TM and QT steels with carbon content not more than 0,12 %, the cold cracking susceptibility P_{cm} shall be be calculated using the following formula:

$$P_{cm} = C + \frac{Si}{30} + \frac{Mn}{20} + \frac{Cu}{20} + \frac{Ni}{60} + \frac{Cr}{20} + \frac{Mo}{15} + \frac{V}{10} + 5B\ (\%) \qquad (3.13.3.3\text{-}3)$$

Table 3.13.3.3

Maximum C_{eq}, *CET* and P_{cm} values for high strength steel

Steel grade and delivery condition	Carbon Equivalent (%)							
	C_{eq}						*CET*	P_{cm}
	Plates			Section	Bars	Tubulars	all	all
	t ≤ 50 mm	50 < t ≤ 100 mm	100 < t ≤ 250 mm	t ≤ 50 mm	t ≤ 250 or d ≤ 250 mm	t ≤ 65 mm		
420N/NR	0,46	0,48	0,52	0,47	0,53	0,47	–	–
420TM	0,43	0,45	0,47	0,44	–	–	–	–
420QT	0,45	0,47	0,49	–	–	0,46	–	–

Steel grade and delivery condition	Carbon Equivalent (%)							
	C_{eq}						*CET*	P_{cm}
	Plates			Section	Bars	Tubulars	all	all
	t ≤ 50 mm	50 < *t* ≤ 100 mm	100 < *t* ≤ 250 mm	*t* ≤ 50 mm	*t* ≤ 250 or *d* ≤ 250 mm	*t* ≤ 65 mm		
460N/NR	0,50	0,52	0,54	0,51	0,55	0,51	0,25	–
460TM	0,45	0,47	0,48	0,46	–	–	0,30	0,23
460QT	0,47	0,48	0,50	–	–	0,48	0,32	0,24
500TM	0,46	0,48	0,50	–	–	–	0,32	0,24
500QT	0,48	0,50	0,54	–	–	0,50	0,34	0,25
550TM	0,48	0,50	0,54	–	–	–	0,34	0,25
550QT	0,56	0,60	0,64	–	–	0,56	0,36	0,28
620TM	0,50	0,52	–	–	–	–	0,34	0,26
620QT	0,56	0,60	0,64	–	–	0,58	0,38	0,30
690TM	0,56	–	–	–	–	–	0,36	0,30
690QT	0,64	0,66	0,70	–	–	0,68	0,40	0,33
890TM	0,60	–	–	–	–	–	0,38	0,28
890QT	0,68	0,75	–	–	–	–	0,40	–
960QT	0,75	–	–	–	–	–	0,40	–

3.13.4 Condition of supply.

Steel shall be delivered in accordance with the processes approved by the Register. These processes include:

Normalized (N)/Normalized rolled (NR);

Thermo-mechanical controlled rolled (TM)/with Accelerated cooling (TM+AcC)/with direct quenching followed by tempering (TM+DQ);

Quenched and Tempered condition (QT).

The definition of these delivery conditions are specified in 3.2.1.4.

Direct quenching after hot-rolling followed by tempering is considered equivalent to conventional quenching and tempering.

3.13.5 Rolling reduction ratio.

The rolling reduction ratio shall be not less than 3:1 unless otherwise agreed at the time of approval.

3.13.6 Thickness limits for approval

3.13.6.1 The maximum thickness of slab, billet or bloom from the continuous casting process shall be at the manufacturer's discretion.

3.13.6.2 Maximum thickness of plates, sections, bars and tubulars, over which a specific delivery condition is applicable, are shown in Table 3.13.6.2.

Table 3.13.6.2

Maximum thickness limits

Delivery condition	Maximum thickness (mm)			
	Plates	Sections	Bars	Tubulars
N	250[1]	50	250	65
NR	150	2		
TM	150	50	–	–
QT	150[1]	50	–	50

[1] Manufacturing process of N steels with thickness larger than 250 mm and QT steels with thickness larger than 150 mm shall be approved by the Register.

[2] The maximum thickness limits of sections, bars and tubulars produced by NR process route and shall be specified in the technical documentation approved by the Register.

3.13.7 Mechanical properties.

Requirements for the tensile strength and impact energy of high strength steel rolled product are given in Tables 3.13.7-1 and 3.13.7-2.

Where rolled products of other shapes (sections, construction pipes, etc.) are tested, the elongation required for longitudinal specimens shall exceed that stated in Tables 3.13.7-1 and 3.13.7-2 by 2 %.

Table 3.13.7-1

Mechanical properties for extra high strength steel

Mechanical properties / Steel grade & delivery condition		Yield strength R_{eH1} min (MPa)			Tensile strength R_m (MPa)		Minimum percentage elongation after fracture (%) $L_0 = 5{,}65\sqrt{S_0}$[3]		Impact energy, average min, (J)		
		Nominal thickness (mm)[2]			Nominal thickness (mm)[2)]						
		3 < t ≤ 50	50 < t ≤ 100	100 < t ≤ 250	3< t ≤ 100	100< t ≤ 250	T	L[4]	Test temp (°C)	T	L
420N/NR 420TM 420QT	A	420	390	365	520 — 680	470 — 650	19	21	0	28	42
	D								–20		
	E								–40		
	F								–60		
460N/NR 460TM 460QT	A	460	430	390	540 — 720	500 — 710	17	19	0	31	46
	D								–20		
	E								–40		
	F								–60		
500TM 500QT	A	500	480	440	590 — 770	540 — 720	17	19	0	33	50
	D								–20		
	E								–40		
	F								–60		
550TM 550QT	A	550	530	490	640 — 820	590 — 770	16	18	0	37	55
	D								–20		
	E								–40		
	F								–60		
620TM 620QT	A	620	580	560	700 — 890	650 — 830	15	17	0	41	62
	D								–20		
	E								–40		
	F								–60		
690TM 690QT	A	690	650	630	770 — 940	710 — 900	14	16	0	46	69
	D								–20		
	E								–40		
	F								–60		
890TM 890QT	A	890	830	–	940 — 1100	–	11	13	0	46	69
	D								–20		
	E								–40		
960QT	A	960	–	–	980 — 1150	–	10	12	0	46	69
	D								–20		
	E								–40		

[1] For tensile test either the upper yield stress (R_{eH}) or where R_{eH} cannot be determined, the 0,2 % proof stress ($R_{p0.2}$) is to be determined and the material is considered to comply with the requirement if either value meets or exceeds the specified minimum value of yield strength.

[2] For plates and sections for applications, such as racks in offshore platforms etc., where the design requires that tensile properties are maintained through the thickness, a decrease in the minimum specified tensile properties is not permitted with an increase in the thickness.

[3] For full thickness flat test specimens with a width of 25 mm and a gauge length of 200 mm the elongation shall comply with the minimum values shown in Table 3.13.7.2.

[4] In the case that the tensile specimen's longitudinal axis is parallel to the final rolling direction, the test result shall comply with the requirement of elongation for longitudinal (L) direction.

Table 3.13.7-2

Elongation minimum values for flat tensile specimens[1]

Strength level	Thickness (mm)						
	≤10	>10≤15	>15≤20	>20≤25	>25≤40	> 40≤50	> 50≤70
420	11	13	14	15	16	17	18
460	11	12	13	14	15	16	17
500	10	11	12	13	14	15	16
550	10	11	12	13	14	15	16
620	9	11	12	12	13	14	15
690	92	102	112	11	12	13	14

[1] The tabulated elongation minimum values are the requirements for testing specimen in transverse direction. 890 and 960 specimens and specimens which are not included in this table shall be proportional specimens with a gauge length of $L_0 = 5{,}65\sqrt{S_0}$

[2] For 690 plates with thickness ≤ 20 mm, round specimen in accordance with 2.1 may be used instead of the flat tensile specimen. The minimum elongation for testing specimen in transverse direction is 14 %.

3.13.8 Sampling and testing.

Test specimens and test procedures for mechanical properties are in accordance with 2.2 and 3.1.

3.13.8.1 Tensile test.

Test specimens shall be cut with their longitudinal axes transverse to the final direction of rolling, except in the case of sections, bars, tubulars and rolled flats with a finished width of 600 mm or less, where the direction of the tensile specimens shall be agreed with the Register. As a rule, full thickness flat tensile specimens shall be prepared in such a manner as to maintain the rolling scale at least at one side. Alternatively, if the machined round test specimens are used, they shall be located at a position lying at a distance of (*t*/4) from the surface or as near as possible to this position.

Where test results are unsatisfactory, retesting shall be conducted in compliance with the requirements of 1.3.4.2.

3.13.8.2 Impact test.

3.13.8.2.1 Unless otherwise agreed with the Register, the impact testing of steel plates and wide flats of more than 600 mm in width shall be effected on specimens prepared in accordance with 2.2.3.1-2, the longitudinal axes of which are perpendicular to the direction of rolling (transverse specimens). Where rolled products of another cross-sectional shape are concerned, the impact testing shall be effected on longitudinal specimens.

3.13.8.2.2 Sub-surface test specimens will be taken in such a way that one side is not further away than 2 mm from a rolled surface, however, for material with a thickness in excess of 50 mm, impact tests shall be taken at the quarter thickness (*t*/4) and mid-thickness (*t*/2) location.

3.13.8.2.3 Impact test for a nominal thickness less than 6 mm are normally not required.

3.13.9 Scope of testing.

Each plate (rolled length) shall undergo tensile and impact testing after heat treatment.

For rolled products quenched and tempered in continuous furnaces, the scope of testing, including the number of specimens and the direction of their cutting out, is determined on the basis of the specification approved by the Register.

Out of each test sample, at least one tensile specimen and three impact test specimens shall be prepared.

If required by the Register, tensile testing shall be made on specimens with their longitudinal axes perpendicular to the plate surface and the reduction in cross-sectional area shall be determined.

3.13.10 Inspection.

Rolled products shall comply with all the requirements of 3.2.7 taking the provisions below into consideration.

When surface defects are eliminated by grinding, the thickness of the rolled products at the ground spot shall not exceed permitted tolerances. When required by the Rules, the rolled products shall undergo the ultrasonic testing in conformity with standards recognized by the Register.

3.13.11 Marking and documentation.

Identification, marking and issued documentation shall comply with the requirements of 3.2.9.

3.14 Z-STEEL

3.14.1 General.

The present requirements apply to steel of normal, higher (refer to 3.2 and 3.5), high strength (refer to 3.13) having thickness equal to or more than 15 mm. Application of the requirements set forth is possible also for rolled steel with thickness less than 15 mm.

Z-steel is recommended for use for welded structures taking up considerable stresses perpendicular to rolled surface. The present requirements define two levels of Z-properties for steel. Two relevant notations: Z25 and Z35 are introduced.

Rolled products shall be manufactured by works recognized by the Register (refer to 1.3.1.2). The manufacturer shall prove that the manufacturing process provides guaranteed plastic properties in the through rolling thickness direction.

At appropriate guarantees of the manufacturer a supply of steel with determination of the reduction in area Z_z of the rolled products with a thickness specified in the documentation agreed with the Register is permitted.

Provision is made for calcium treatment, vacuum degassing, argon stirring, sulphur segregation control, etc.

3.14.2 Chemical composition.

Z-steel shall be fully killed and fine grain treated.

The contents of elements shall comply with the RS-agreed national or international standards.

The content of sulphur (ladle analysis) in Z-steel shall not exceed 0,008 %.

3.14.3 Mechanical properties.

The mechanical properties of the steel, unless otherwise specified, shall meet the requirements of 3.2, 3.5 and 3.13.

For the appropriate level of Z-properties, the average value of the reduction in area Z_z obtained upon tension of three specimens, the longitudinal centreline of which is perpendicular to rolled surface, shall comply with Table 3.14.3-1. Table 3.14.3-1 gives for each level of Z-properties the value of the reduction in area to which the area is allowed to reduce on one of the specimens.

Table 3.14.3-1

Level of Z-properties	Z25, %	Z35, %
Minimum average value of the reduction in area	25	35
Minimum allowable value of the reduction in area on one specimen	15	25

The need for retest on additional set of three specimens cut out from the same rolled product (refer to 2.2.2.5) and acceptance of test results including also retest results as satisfactory is shown in Table 3.14.3-2.

The Table 3.14.3-2 gives boundary cases taken into account by the Rules:

case of satisfactory tests on three specimens;

three cases where retest is permitted;

case of retest of six specimens (three completed plus three additional).

The retest results are considered to be satisfactory and the rolled product/batch is accepted for supply, provided:

the average value of the reduction in area Z_z, obtained as a result of testing six specimens exceeds the required minimum average value (refer to Table 3.14.3-2),

the results less than the mentioned required value have been obtained on not more than two specimens out of six.

Table 3.14.3-2

	Tests		Retest
	Acceptable result	Unacceptable result where retest is required	Acceptable result
Minimum required value of the reduction in area	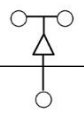	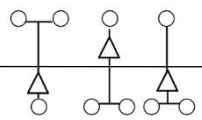	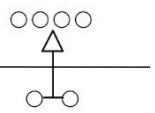
Minimum allowable value of the reduction in area on one specimen			
Symbols: ○— individual result; △ average result.			

Where the retest results are unsatisfactory the rolled product/batch submitted shall be rejected. Additional tests (on the same conditions) are permitted for each rolled product (other than that already tested) out of the batch rejected.

3.14.4 Sampling and scope of testing.

The scope of testing depends on the type of rolled product and content of sulphur (ladle analysis). The scope of testing shall be determined in accordance with Table 3.14.4.

Samples shall be taken from one end of the semi-finished product submitted for tests, as indicated in 2.2.2.5.

Table 3.14.4

Type of rolled product	Content of sulphur, %	
	S > 0,005	S ≤ 0,005
Plate	Each plate	One plate out of maximum 50 t of products of the same cast, thickness and heat treatment
Wide flats of thickness t ≤ 25 mm	Maximum 10 t of products of the same cast, thickness and heat treatment	Maximum 50 t of products of the same cast, thickness and heat treatment
Wide flats of thickness t > 25 mm	Maximum 20 t of products of the same cast, thickness and heat treatment	Maximum 50 t of products of the same cast, thickness and heat treatment

3.14.5 Inspection.

Besides fulfilment of the requirements of 3.2.7, all the rolled products shall be subject to ultrasonic testing at the final stage of manufacture.

The ultrasonic testing shall be carried out in compliance with the requirements of EN 10160 (level S1/E1), ASTM A578 (level C at a frequency of 4 MHz) or with the RS-agreed national standards.

3.14.6 Marking and documentation.

Identification, marking and issued documentation — in accordance with the requirements of 3.2.8. Besides, to the steel designation mentioned Z25 or Z35 shall be added, respectively, (e.g., DH36225).

3.15 WIRE ROPES

3.15.1 General.

3.15.1.1 The present requirements apply to ropes, subject to the Register survey, which are intended for cargo-handling gear, life-saving appliances and other ship appliances.

3.15.1.2 The ropes shall be manufactured and tested in conformity with standards approved by the Register and by works recognized by that body according to 1.3.1.2.

3.15.2 Manufacture.

3.15.2.1 For the manufacture of ropes, wire with a coating to protect it from corrosion and a tensile strength not less than 1180 MPa shall be used. For the manufacture of specialized ropes intended for operation in closed spaces, wire without a coating to protect it from corrosion (non-galvanized wire) may be used.

3.15.2.2 The organic fibre core of ropes shall be manila, sizal, hemp or synthetic fibre. Ropes with the diameter more than 12 mm shall have a core of three strands.

3.15.2.3 Cores of organic fibre shall be impregnated or lubricated with corrosion preventive or anti-rot substances not solvable in sea water and containing no acids or alkalis. The lubricant for the ropes and the impregnant for the organic-fibre cores shall be compatible by their physical and chemical properties.

3.15.2.4 For ships contracted for construction or conversion on or after 1 April 2020, use of ropes with steel core is permitted if so indicated in other RS normative documents.

3.15.3 Sampling.

For testing purposes, from each rope 2000 m or less long a sample length shall be taken, and from ropes longer than 2000 m a sample length shall be taken from both ends. The sample lengths shall be long enough to make all the required testing possible.

3.15.4 Scope of testing.

3.15.4.1 After manufacture, each rope shall undergo the following tests:

breaking test of rope as a whole;

tensile test (ultimate strength being determined), bend test, twisting test and testing of the bond between the coating and steel core on wires from the rope.

The number of wires to be tested may be determined on the basis of standards, but not less than 10 % of the total number of wires in a group of wires of a particular diameter shall be tested.

3.15.4.2 Testing shall be conducted in accordance with approved standards.

The breaking test of the rope as a whole shall be effected by means of a breaking machine having the distance between the clamps not less than 50 rope diameters. If during testing the rope breaks less than 50 mm away from the grip the test shall be repeated.

3.15.4.3 The test results shall be in accordance with standards.

3.15.4.4 Under conditions of an established manufacturing process and in the event of testing equipment of the required capacity being not available to enable the breaking test of a rope as a whole the breaking load may be determined proceeding from the results of the tensile test, F, in kN, of all the wires making up the rope on the basis of the formula

$$F = c\sum_1^i[(\sum_1^m F_m)\, n/z] \qquad (3.15.4.4)$$

where c = wire efficiency factor for the rope, which shall be adopted on the basis of standards or calculated as the ratio of the breaking load of the rope as a whole to the total breaking load of all the wires making up the rope, both the values being stipulated by the standards;

i = number of groups of wires of the same diameter;

m = number of wires from each group of a particular diameter, subjected to tensile testing, which conform to standards;

F_m = the greatest load, during the tensile test of a wire, kN, after which the specimen breaks;

n = number of wires in each group of a particular diameter;

z = number of wires from each group of a particular diameter subjected to tensile testing.

Proceeding from the intended application of the rope, the number of wires to be tensile tested may be reduced, but in no case to less than 25 % of the total number of wires in the rope.

3.15.5 Inspection.

3.15.5.1 The compliance of the structure, diameter and other parameters of the rope to standards shall be confirmed by visual testing.

3.15.5.2 When bends or burn-off spots are removed from the ends of unstrandable ropes the strands and wires in the strands shall not uncoil or may uncoil in such a way that they can be easily returned to their initial position.

3.15.5.3 The rope diameter shall be determined on a slack rope at right angles to the axis between two opposite strands in two positions.

The rope diameter shall not exceed the design value by more than 6 %.

3.15.5.4 On the rope surface, twisting and bending of strands, sinking, crossing, corrosion and breaking of wires in strands that prevent using the rope in accordance with the purpose are not permitted.

3.15.6 Marking and documentation.

Identification, marking and issued documentation — in accordance with the requirements o 1.4.

3.16 STAINLESS STEEL

3.16.1 General.

3.16.1.1 These requirements apply to stainless steel subject to the Register survey as required in other Parts of the Rules.

The Chapter includes the requirements for stainless steel rolled plates and bars, forgings and pipes of martensitic (M), martensitic + ferritic (MF), ferritic (F), austenitic + martensitic (AM), austenitic (A) and austenitic + ferritic (AF) classes. The assumed classification of stainless steel depending on its chemical composition and structure is given in Table 3.16.1.1.

Steel designations are based on the designations used in international standards.

Designations of national steel marks are given in accordance with the Russian standard.

Table 3.16.1.1

Assumed classification of stainless steel depending on chemical composition and structure

Steel class	Steel designation	Steel mark		Temperature range for application, °C
		AISI/UNS	National	
M-1	X20Cr13	410	20Х13	–20÷ +450
		420	30Х13	
	X7CrNiNb16 4	–	07Х16Н4Б	–60÷ +350
MF-2	X15CrNi17	431	14Х17Н2	–20÷ +350
F-3	X8CrTi17	430Ti	08Х17Т	–0÷ +600
AM-4	X8CrNiTi17 6	–	08Х17Н6Т	–60÷ +250
A-5	X10CrNiTi18 10	321, 347	08Х18Н10Т	–165÷ +600
			12Х18Н10Т	
	X2CrNi19 11	304L, 304LN	–	–165÷ +600
A-6	X2CrNiMo17 13 2	316L, 316LN	03Х17Н14М3	–165÷ +600
	X2CrNiMo18 13 3	317L, 317LN	–	–165÷ +600
	X2CrNiMoTi17 13 3	–	10Х17Н13М3Т	–165÷ +600
A-7	X2CrNiMoCu20 18 6	S31254	–	–165÷ +600
	X2CrNiMoCu21 23 4 2	N08904	–	–165÷ +600
AF-8	X2CrNiMo22 5 3	S31803	03Х22Н6М2	–40÷ +250
	X3CrNiMo25 6 3	S31260	–	–40÷ +250
	X4CrNiVo25 5 3	S32550	–	–40÷ +250
	X2CrNiMo25 7 4	S32750	–	–40÷ +250
	X3CrNiMo25 7 3	S32760	–	–40÷ +250
	X10CrNiTi22 6	–	08Х22Н6Т	–40÷ +250
	X10CrNiMo21 6 2	–	08Х21Н6М2Т	–40÷ +250
A-9	X4CrNiMnMoNVNb 20 6 11 2	–	04Х20Н6Г11М2АФБ	–80÷ +500

3.16.1.2 Corrosion resistant steel used as an alternative means of providing corrosion protection (protective coatings) of cargo tanks of oil tankers specified in 1.2.5.3, Part II "Hull" shall meet the requirements of IMO resolution MSC.289(87).

3.16.1.3 The procedure for recognition of stainless steel manufacturers is given in 2.2.5, Part III "Technical Supervision during Manufacture of Materials" of the Rules for Technical Supervision during Construction of Ships and Manufacture of Materials and Products for Ships.

Materials meeting the Register requirements shall be supplied with the Register Certificates.

Manufacturers' Certificates for ingots and blanks with indication of the manufacturer, steel mark, heat No., chemical composition and documentation, in compliance with which ingots/blanks were manufactured, shall be submitted to the surveyor to the Register who carries out the survey at the manufacturer's where there are no melting processes.

3.16.1.4 The use of stainless steel not meeting the requirements for chemical composition, mechanical properties and/or condition of supply may be permitted after detailed study of steel properties under the conditions, for which the steel is intended.

3.16.1.5 Tests of stainless steel for susceptibility to intergranular, through, crevice and pitting corrosion as well as metallographic examination, α-phase determination, etc shall be carried out according to the procedures given in the RS-agreed standards.

3.16.1.6 Chemical composition and mechanical properties.

Chemical composition and mechanical properties of semi-finished products of stainless steel as well as steel resistance to environmental effects shall meet the requirements of this Part of the Rules and also the requirements of RS-agreed national and international standards or other RS-agreed special documents.

The chemical composition of stainless steel to be determined for each heat shall meet the requirements of Table 3.16.1.6. Where necessary, samples may be taken directly from a semi-finished product (plate, forging, etc).

Table 3.16.1.6

Chemical composition of stainless steel

AISI/UNS										
Steel class and mark	Content of elements, %									
	C, max	Si	Mn	P	S	Cr	Ni	Mo	N	Other
Martensitic										
410	0,12	1,0	1,0	0,045	0,03	12,0 —14,0	–	–	–	–
420	0,17	1,0	1,0	0,045	0,03	12,0 — 14,0	–	–	–	–
Martensite-ferritic										
431	0,23	1,0	1,0	0,045	0,03	16,0 — 18,0	1,5 — 2,5	–	–	–
Ferritic										
430Ti	0,1	1,0	1,0	0,045	0,03	16,0 — 18,0	–	–	–	Ti×C
Austenitic										
304L	0,03	1,0	2,0	0,045	0,03	17,0 — 20,0	8,0 — 13,0	–	0,10	–
304LN	0,03	1,0	2,0	0,045	0,03	17,0 — 20,0	8,0 — 12,0	–	0,10 — 0,22	–
316L	0,03	1,0	2,0	0,045	0,03	16,0 — 18,5	10,0 — 15,0	2,0 — 3,0	0,10	–
316LN	0,03	1,0	2,0	0,045	0,03	16,0 — 18,5	10,0 — 14,5	2,0 — 3,0	0,10 — 0,22	–
317L	0,03	1,0	2,0	0,045	0,03	18,0 — 20,0	11,0 — 15,0	3,0 — 4,0	0,10	–
317LN	0,03	1,0	2,0	0,045	0,03	18,0 — 20,0	12,5 — 15,0	3,0 — 4,0	0,10 — 0,22	–
321	0,08	1,0	2,0	0,045	0,03	17,0 — 19,0	9,0 — 12,0	–	0,10	Ti≥5×C≤0,70
347	0,08	1,0	2,0	0,045	0,03	17,0 — 19,0	9,0 — 13,0	–	0,10	Nb≥10×C≤1,0
UNS S31254	0,02	0,8	1,0	0,03	0,01	19,5 — 20,5	17,5 — 18,5	6,0 — 6,5	0,18 — 0,22	Cu 0,50 — 1,0
UNS N08904	0,02	1,0	2,0	0,04	0,025	19,0 — 23,0	23,0 — 28,0	4,0 — 5,0	0,15	Cu 1,00 — 2,0
Austenite-ferritic (Duplex)										
UNS S31260	0,03	0,75	1,0	0,03	0,03	24,0 — 26,0	5,5 — 7,5	2,5 — 3,5	0,10 — 0,30	Cu 0,2 — 0,8 W0,1 — 0,5
UNS S3 1803	0,03	1,0	2,0	0,03	0,02	21,0 — 23,0	4,5 — 6,5	2,5 — 3,5	0,08 — 0,20	–
UNS S32550	0,04	1,0	1,5	0,04	0,03	24,0 — 27,0	4,5 — 6,5	2,0 — 4,0[1]	0,10 — 0,25	Cu1, 5 — 2,5
UNS S32750	0,03	0,8	1,2	0,035	0,02	24,0 — 26,0	6,0 — 8,0	3,0 — 5,0	0,24 — 0,32	Cu0,50, max
UNS S32760	0,03[2]	1,0	1,0	0,03	0,01	24,0 — 26,0	6,0 — 8,0	3,0 — 4,0	0,20 — 0,30	Cu 0,50 — 1,0 W 0,50 — 1,0

[1] For pipes content of Mo is taken equal to 2,90 to 3,90
[2] For pipes content of C is ≤ 0,05.

National stainless steels									
Steel class and mark	Content of elements, %								
	C	Si, max	Mn, max	Cr	Ni	Ti	Mo	S, max	P, max
Martensitic									
20Х13	0,16 — 0,25	0,8	0,8	12,0 — 14,0	–	–	–	0,025	0,030
30Х13	0,26 — 0,35	0,8	0,8	12,0 — 14,0	–	–	–	0,025	0,030
07Х16П4Б	0,05 — 0,10	0,6	0,2 — 0,5	14,0 — 16,5	3,5 — 4,5	Nb 0,2 — 0,4	–	0,020	0,025
Martensite-ferritic									
14Х17Н2	0,11 — 0,17	0,8	0,8	16,0 — 18,0	1,5 — 2,5	–	–	0,025	0,030
Ferritic									
08Х17Т	max 0,08	0,8	0,8	16,0 — 18,0	–	5×C — 0,8	–	0,025	0,030
Austenite-martensitic									
08Х17Н6Т	max 0,08	0,8	0,8	16,5 — 18,0	5,5 — 6,5	0,15 — 0,35	–	0,020	0,035
Austenitic									
08Х18Н10Т	max 0,08	0,8	2,0	17,0 — 19,0	9,0 — 11,0	5C — 0,7	–	0,020	0,035
12Х18Н10Т	max 0,12	0,8	2,0	17,0 — 19,0	9,0 — 11,0	5C — 0,8	–	0,020	0,035
10Х17Н13М3Т	max 0,10	0,8	2,0	16,0 — 18,0	12,0 — 14,0	5C — 0,7	3,0 — 4,0	0,020	0,035
03Х17Н14М3	max 0,03	max 0,4	1,0 — 2,0	16,8 — 18,3	13,5 — 15,0	–	2,2 — 2,8	0,020	0,030
04Х20Н6Г11М2АФБ[1]	max 0,04	0,1 — 0,4	10,0 — 12,0	18,5 — 19,5	6,0 — 8,0	–	1,2 — 1,7	0,010	0,020

National stainless steels									
Steel class and mark	Content of elements, %								
	C	Si, max	Mn, max	Cr	Ni	Ti	Mo	S, max	P, max
Austenite-ferritic									
08Х22Н6Т	max 0,08	0,8	0,8	21,0 — 23,0	5,3 — 6,3	5С — 0,65	–	0,025	0,035
08Х21Н6М2Т	max 0,08	0,8	0,8	20,0 — 22,0	5,5 — 6,5	0,20 — 0,40	1,8 — 2,5	0,025	0,035
03Х22Н6М2	max 0,03	max 0,4	1,0 — 2,0	21,0 — 23,0	5,5 — 6,5	–	1,8 — 2,5	0,020	0,035
[1] Additional requirement for the content of the following chemical elements: N: 0,45 — 0,53; Nb: 0,10 — 0,20; V: 0,10 — 0,20.									

The requirements for mechanical properties of semi-finished products depending on their type are given in Tables 3.16.2.2, 3.16.3.2-1, 3.16.3.2-2 and 3.16.4.2.

3.16.1.7 Condition of supply.

All semi-finished products shall be supplied in heat-treated condition.

Heat treatment conditions are specified in accordance with standards recognized by the Register or other normative documents.

Where heat treatment conditions are not indicated in the standards, such conditions shall be specified in accordance with the standards and other normative technical documentation approved by the Register.

Steel plates and flats of 4 mm in thickness and less may be supplied in semi-cold-worked or cold- worked condition.

Type or conditions of heat treatment shall be indicated in the Manufacturer's Certificate for the Semi-Finished Product.

The semi-finished products made of A-9 class steel shall be supplied after thermo-mechanical rolling. Upon agreement with the Register the semi-finished products may be supplied after being quenched with cooling in water in accordance with normative technical documentation.

3.16.1.8 Sampling.

Samples are taken from a semi-finished product.

For forgings separately forged samples prepared from the metal of the same heat and with the same degree of deformation as the semi-finished product submitted for the tests may be used. In such case, dimensions of the sample in terms of their thickness and diameter may vary from the maximum dimensions of the forging itself by not more than 25 %.

Samples for preparation of specimens shall be cut out upon completion of all types of heat treatment.

Separately forged samples shall be subjected to all types of process heating and heat treatment in one charge with the forging submitted for the tests.

The dimensions of samples shall provide performance of the required and possible retests.

Unless expressly provided otherwise, samples shall be taken as follows:

rolled stock — in compliance with 3.2.5. Samples for impact tests shall be cut in such a manner that the longitudinal axis of specimens is transverse to the last direction of rolling. For steel sections and bars longitudinal specimens may be used. For a semi-finished product having a size (diameter, square side, diameter of inscribed circle) under 40 mm the specimen axis shall coincide with the axis of the semifinished product;

forgings — in compliance with 3.7.5.1, sample being taken from the feed head of the ingot. Samples may be taken at a distance of 1/3 of the radius or 1/6 of the diagonal from the outer surface of the forging or from the centre of the forging;

pipes — in compliance with 3.4.5 and 3.4.6.

Samples for intergranular corrosion tests shall be taken similarly to those for tensile tests.

In any case, schemes of taking samples and cutting out specimens shall be indicated on the sketch.

3.16.1.9 Scope of tests.

3.16.1.9.1 Types of tests, to which stainless steel can be subjected during manufacture, are given in Table 3.16.1.9.1. Tests, to which stainless steel supplied under the Register technical supervision shall be subjected, are marked with "+".

As a rule, semi-finished products of stainless steel are submitted for tests in batches or individually.

A batch shall consist of semi-finished products of the same steel mark, the same heat, the same condition of supply, one shape (type) and size and made using the same production process.

Forgings of one batch shall be made according to the sketch and heat-treated in one charge.

Pipes included in the batch shall have the same wall thickness.

Steel plates and forgings intended for use at temperatures below zero shall be submitted for tests individually.

Sizes of batches, number and procedure of taking samples for steel plates, sheet steel and bars are given in 3.16.2.3, for forgings — in 3.16.3.3, for pipes — in 3.16.4.3.

Table 3.16.1.9.1

Types of semi-finished products of stainless steel tests

Characteristics to be determined	Steel class								
	M-1	MF-2	F-3	AM-4	A-5	A-6	A-7	AF-8	A-9
Mechanical properties at 20 °C:									
tensile strength R_m	+	+	+	+	+	+	+	+	+
yield stress $R_{po,2}$	+	+	+	+	+	+	+	+	+
elongation A_5	+	+	+	+	+	+	+	+	+
reduction in area Z	+	+	+	+	+	+	+	+	+
Same at operating temperature	+[1]	+[1]	+[1]	+[1]	+[1]	+[1]	+[1]	+[1]	+[1]
Impact toughness at +20 °C, KCV^{+20}	+	+	+	+	–	–	–	+	+
Impact toughness at a temperature below *KCV*	+[1]	+[1]	–	+[1]	+[1]	+[1]	+[1]	+[1]	+
Impact energy at a temperature below *KV*	–	–	–	–	+[1]	+[1]	+[1]	+	+[1]
Susceptibility to intergranular corrosion	+[2]	+	+	+	+	+	+	+	+
Macrostructure examination	+	+	+	+	+	+	+	+	+
a-phase examination	–	–	–	–	+[1]	+[1]	+[1]	–	+[1]
Grain size control	–	–	+	+[1]	+[1]	+[1]	+[1]	+[1]	+[1]
Process tests	+[1]	+[1]	+[1]	+[1]	+[1]	+[1]	+[1]	+[1]	+[1]
Testing of the geometric dimensions	+	+	+	+	+	+	+	+	+
Non-destructive testing	+[1]	+[1]	+[1]	+[1]	+[1]	+[1]	+[1]	+[1]	+
Control of non-metallic inclusion content	+[1]	+[1]	+[1]	+[1]	+[1]	+[1]	+[1]	+[1]	+[1]
Determination or confirmation of brittleness critical temperature	+[1]	+[1]	+[1]	+[1]	–	–	–	–	–
Determination of a crack resistance parameter CTOD	–	–	–	–	–	–	–	–	+[1]
Through thickness tensile tests	–	–	–	–	–	–	–	–	+[1]

[1] When specified in the approved normative documentation excluding the pipes.
[2] Only for steel mark 07Х16Н4Б.

3.16.1.9.2 Tests for the recognizing an enterprise as a manufacturer of stainless steel in accordance with 3.16.1.3 shall be carried out under a program approved by the Register (refer to 2.2.5.2.4, Part III "Technical Supervision during Manufacture of Materials" of the Rules for Technical Supervision during Construction of Ships and Manufacture of Materials and Products for Ships) and generally shall include:

chemical analysis;

determination of mechanical properties (R_m, $R_{p0,2}$, A_5, Z) at 20 °C and a design temperature;

determination or confirmation of the critical brittleness temperature (except for austenitic type steels);

metallographic examination and macrostructure examination to detect shrinkage cavities, bubbles, non-metallic inclusions, grain size;

tests for susceptibility to intergranular, through, crevice, pitting corrosion;

determination of α-phase amount (for austenitic type steels);

process tests (ring expanding, flattening, bending, etc) and plasticity assessment in case of cold stamping.

3.16.1.9.3 Testing procedures, types and dimensions of specimens shall comply with the requirements of Section 2 of this Part or RS-agreed national and international standards.

Retests aiming to check mechanical properties shall be carried out in compliance with 1.3.5.2. During retests those characteristics shall be determined, for which negative results were obtained.

In case of negative results of intergranular corrosion tests and retests for determination of mechanical properties obtained even for one specimen, the blanks shall be subjected to repeated heat treatment and submitted for tests as new ones. Not more than three complete heat treatments are allowed.

3.16.1.10 Marking and documentation.

Identification, marking and issued documentation — in accordance with the requirements of 1.4. Every semi-finished product of stainless steel shall have the Register brand.

3.16.2 Rolled products.

3.16.2.1 These requirements apply to stainless steel plates, flats and sections with a thickness up to 50 mm as well as to hot-rolled and forged steel of round, square or rectangular section with a diameter or thickness up to 200 mm.

3.16.2.2 Mechanical properties of steel at 20 °C shall not be worse than given in Table 3.16.2.2.

In determining mechanical properties of rolled products (bars) using transverse specimens, the requirements may be reduced in accordance with the provisions of national or international standards.

Table 3.16.2.2

Mechanical properties of stainless steel rolled products

Steel class	Tensile strength R_m, min, MPa	Yield stress $R_{p0,2}$, min, MPa	Elongation A_5, min, %
M-1	650	440	16
	850	735	13
MF-2	690	540	12
F-3	440	–	18
A-5	440	175	45
	490	195	35
A-6	440	185	40
	510	200	35
A-7	650	300	35
AF-8	580	340	20
	650	450	25
	760	550	15
A-9	800	500	20
	900	650	20
	940	760	20

3.16.2.3 Scope of tests.

The number of samples and batch size for rolled products shall be determined in the following way:

for steel plates and wide flats (≥ 600 mm) more than 20 mm in thickness, more than 10 m long and more than 5 tons in mass samples are taken from both ends of each rolled product. In other cases, a sample is taken from one end of the rolled product;

for steel plates and wide flats (≥ 600 mm) less than 20 mm in thickness, samples are taken from one end of the plate of the batch containing not more than 20 plates;

for rolled steel, samples are taken from both ends of each roll;

for steel plates and sections, samples are taken from one end of one semi-finished product of the batch containing not more than 50 pieces, having a mass not more than 5 t.

Plates that vary in thickness by not more than 5 mm may be combined in one batch.

As a rule, the following specimens shall be prepared from each sample of steel plates, wide flats and bars:

one specimen for tensile test;

two specimens for impact toughness test;

one set of specimens (at least two pieces) for austenitic steels, two sets of specimens (at least four pieces) for austenitic — ferritic and austenitic — martensitic steels, one of which is a check specimen, for intergranular corrosion tests;

at least one template for macrostructure control.

3.16.2.4 Inspection.

All the plates and rods of the batch shall undergo verification of the geometric dimensions

Non-destructive testing (NDT) for rolled products and its criteria shall be determined taking into account the international or national standards.

During certification of the rolled products manufactured by works specifications, technical specifications or other normative documents, the manufacturer shall ensure the absence of unacceptable defects, which may be confirmed by non-destructive testing in the scope agreed with the Register.

The surface defects resulting from manufacturing procedure are permitted if their parameters (such as depth, area, position, etc.) are within the permissible deviations.

3.16.2.5 Repairing of defects.

Defective areas may be welded in cases where the depth of the chipped areas after rectifying defects does not exceed 20 % of the nominal thickness of the billet, and the total chipped area does not exceed 2 % of the total area of the billet.

Where projections of welded areas coincide in thickness on both sides of the blank, the permissible chipped areas shall not exceed in total the depth permissible on one side the billet.

Welding, control of welded areas and heat treatment (if necessary) shall be performed in compliance with the standards or the manufacturer's documentation, agreed with the Register. In case of repairing the rolled products, the applicant shall draw up the Appendix to the Manufacturer's Certificate indicating the repair areas.

3.16.3 Forgings.

3.16.3.1 These requirements apply to semi-finished products manufactured by forging and hot stamping.

3.16.3.2 Mechanical properties of forgings and stampings, to which intergranular corrosion requirements apply, shall not be lower than that given in Table 3.16.3.2-1. Mechanical properties of forgings and stampings, to which intergranular corrosion requirements do not apply, shall meet the requirements of Table 3.16.3.2-2.

Table 3.16.3.2-1

Mechanical properties of stainless steel forgings and stampings, to which intergranular corrosion requirements apply

Steel class	Tensile strength R_m, min, MPa	Yield stress $P_{p0,2}$, min, MPa	Elongation A_5, min, %
M-1	880	690	12
MF-2	690	540	12
AM-4	730	540	12
A-5	490	190	38
A-6	510	210	38
AF-8	590	340	17

Table 3.16.3.2-2

Mechanical properties of stainless steel forgings and stampings to which intergranular corrosion requirements do not apply

Steel class	Tensile strength R_m, min, MPa	Yield stress $P_{p0,2}$, min, MPa	Elongation A_5, min, %
M-I	650	440	13
MF-2	690	540	12
AM-4	730	630	10
	880	730	12

In the above tables mechanical properties determined on longitudinal specimens are given for semi-finished products, the diameter (thickness) of which does not exceed 300 mm.

Mechanical properties of bigger forgings are specified by the manufacturer in accordance with the acting standards and subject to agreement with the Register.

In determining mechanical properties of forgings using transverse, radial or tangential specimens the requirements for mechanical properties may be reduced in accordance with provisions of national and international standards or by values given in Table 3.16.3.2-3.

Table 3.16.3.2-3

Permissible reduction of mechanical properties when using transverse, radial and tangential specimens, in %

Mechanical properties	Specimen type			
	Transverse	Radial	Tangential specimens for ingots having diameter (thickness), mm	
			under 300	over 300
Yield stress $R_{p0,2}$, in MPa	10	10	5,0	5,0
Tensile strength R_m, in MPa	10	10	5,0	5,0
Elongation A_5, in %	50	35	25	30
Reduction in area Z, in %	50	40	25	30
Impact toughness KCV, in J/cm^2	50	40	25	30

Notes: 1. For forgings of "ring" type with a diameter more than 1000 mm produced by drawing, the requirements for mechanical properties obtained in testing tangential specimens are based on the requirements for longitudinal specimens.
2. In any case impact toughness shall not be less than 30 J/cm^2 and elongation shall not be less than 9 %.

3.16.3.3 Scope of tests.

The number of samples and batch size of stainless steel forgings and stampings shall be determined as follows:

for forgings and stampings of 20 kg in mass or less — from one semi-finished product of the batch consisting of not more than 30 pieces. Samples are taken from one end of the semi-finished product;

for forgings and stampings having a mass from 20 to 1000 kg — from one semi-finished product of the batch consisting of not more than 10 pieces. Samples are taken from one end of the semi-finished product;

for forgings and stampings of more than 1000 kg in mass — from each forging. Where a length is 3 m and more, from both ends of each forging.

Forgings made according to different drawings but close in shape and varying in section by not more than 25 % may be combined in one batch.

As a rule, the following specimens shall be prepared from each sample:

for tensile test — one specimen;

for impact toughness — two specimens;

for intergranular corrosion test — four specimens, two of which are check specimens;

for macrostructure control — at least one specimen.

3.16.3.4 Inspection.

All forgings and stampings of the batch are subject to inspection of a surface and dimensions. Absence of inadmissible defects shall be guaranteed by the manufacturer and may be proved by non-destructive testing, if specified by order specification.

Welding of defects is subject to special consideration by the Register in each particular case and is generally restricted to the rectification of the defects of minor nature and in areas of low working stresses. The repairing technique and testing procedure are subject to the Register agreement.

After welding the location of all repairs and the results of inspection shall be shown in the drawing or sketch of the forging and annexed to the Register Certificate.

3.16.4 Pipes.

3.16.4.1 These requirements apply to hot- and cold-formed pipes of stainless steel.

3.16.4.2 Mechanical properties of pipes shall not be lower than that given in Table 3.16.4.2.

Table 3.16.4.2

Steel class	Tensile strength R_m, min, MPa	Yield stress $P_{p0,2}$, min, MPa	Elongation A_5, min, %
A-5	490	175	30
	549	186	35
A-6	490	185	30
	529	216	30
AF-8	580	200	20
	690	450	25
	760	550	15
	800	550	25

3.16.4.3 Scope of testing.

The size of the batch shall be determined as follows:

where the outside diameter is 76 mm and less — 300 pieces;

where the outside diameter is over 76 mm — 200 pieces.

Samples are taken from one end of at least two pipes of the batch.

Unless expressly specified otherwise in the normative documentation, the following specimens shall be taken from each sample:

for tensile test — 1 specimen;

for flattening or expansion of rings — 1 specimen;

for flaring — 1 specimen;

for intergranular corrosion test of pipes made of austenitic steel — set of at least 2 specimens;

for pipes of austenitic + ferritic pipes — two sets of at least 4 specimens, one of which is a check set.

3.16.4.4 Inspection and non-destructive testing.

Each pipe shall be subjected to a hydraulic pressure test, if this test is specified in the normative documentation for products.

Each pipe shall be subjected to ultrasonic testing. The selection of alternative methods for non-destructive testing is subject to agreement with the Register.

All pipes and tubes shall undergo external and internal examination of the surface for compliance with the requirements of normative documentation for products. Absence of inadmissible defects shall be guaranteed by the manufacturer.

3.17 CLAD STEEL

3.17.1 General.

3.17.1.1 The present requirements cover steel plates of low-alloy metal coated with a thin layer of stainless steel on one or both sides and intended for tanks and vessels being subject to the Register technical supervision, as well as for ice strakes of icebreakers, arctic ice class ships, mobile offshore drilling units and fixed offshore platforms.

Clad steel shall be manufactured by works recognized in accordance with 1.3.1.2.

3.17.1.2 Clad steel shall be produced in accordance with international and national standards or works specifications.

The Register representative carrying out the technical supervision at the manufacturer's of clad steel plates, which has no foundry for all the ingredients of clad steel, shall be provided with the Manufacturer's Certificates for billets. All ingredients shall meet the requirements of the relevant Chapters of this Part.

3.17.1.3 Hull structural rolled products of B to F Grades with a yield stress from 235 MPa to 690 MPa shall be used as base material of clad steel in accordance with the requirements of 3.2, 3.5, 3.13 and 3.14. The steel shall be selected in compliance with the structure function (refer to 1.2, Part II "Hull" of these Rules and 1.5, Part II "Hull" of the Rules for the Classification, Construction and Equipment of MODU/FOP) reasoning from the design service temperature of the material T_D, the function of a structural member (special or primary), the base material thickness, requirements for Z-properties and loading conditions.

In cases not specified in Table 1.5.1.2, Part II "Hull" of the Rules for the Classification, Construction and Equipment of MODU/FOP the selection of the base material steel grade shall meet the requirements of 3.5 for steel with index "Arc". The base metal shall be over 10 mm thick.

Austenitic or austenitic-ferritic stainless steels (classes A and AF) having a chemical composition and properties meeting the requirements of 3.16 shall be used as the cladding metal.

The use of other brands of corrosion-resistant materials as the cladding metal shall be approved by the customer and shall be the responsibility of the manufacturer. The nominal thickness of the cladding metal shall be not less than 2 mm.

The cladding metal shall be chosen considering the specific operational conditions.

3.17.1.4 Hot (pack) rolling, explosion welding, overlay rolling or a combination thereof may be used for plate cladding.

3.17.2 Chemical composition and mechanical properties.

3.17.2.1 The chemical composition and mechanical properties of the base metal shall meet the requirements of 3.2, 3.5, 3.13 and 3.14.

Unless otherwise specified, sampling and the base metal testing shall be carried out in accordance with the requirements of the above chapters.

3.17.2.2 The chemical composition and mechanical properties of the cladding metal shall meet the requirements of 3.16.

3.17.2.3 The use of clad steel for specific operational conditions shall be agreed in each particular case.

3.17.3 Condition of supply.

3.17.3.1 Plates with stainless steel cladding shall be supplied in as-rolled condition and may be heat- treated to ensure the properties of the base metal. In this case the corrosion resistance of the cladding metal after heat treatment shall meet the requirements of 3.16. The type of heat treatment shall meet the requirements of standards and shall be approved by the Register at the initial survey of the manufacturer.

3.17.4 Scope of testing.

3.17.4.1 The scope of testing at the initial survey of the manufacturer shall be determined by the program developed in compliance with the requirements of 2.2.1.3.1, Part III "Technical Supervision during Manufacture of Materials" of the Rules for Technical Supervision during Construction of Ships and Manufacture of Materials and Products for Ships. The program shall be approved by the Register.

The following types of tests shall additionally be carried out:

tensile test on the full thickness clad plate test specimen;

bend test on the clad test specimens;

shear test on the cladding metal;

resistance of the cladding metal against intergranular corrosion where such test has not been carried out on the initial material;

test for determining the base material Z-properties where such test has not been carried out on the initial material;

test for determining the base material cold and crack resistance of the base layer where such tests have not been carried out on the initial material.

3.17.4.1.1 Strength in tensile test on the full thickness clad plates.

The tensile test on the full thickness clad plate test specimens shall be performed for determining the tensile strength and yield stress of clad steel. With the total thickness of less than 20 mm the clad plate in tensile test shall meet the following requirement:

$$R \geq \frac{R_o t_o + R_n t_n}{t} \qquad (3.17.4.1.1)$$

where R = nominal value of tensile strength or yield stress of the clad plate, N/mm^2;
R_o, R_n = nominal value of tensile strength R_m or yield stress $R_{0,2}$ (σ_B, $\sigma_{0,2}$) for base metal and cladding metal, respectively, N/mm^2;
t_o, t_n = nominal thickness of base material and cladding metal, respectively, mm;
t = nominal thickness of the clad plate, mm.

3.17.4.1.2 Determination of plybond strength.

The bend test on the clad test specimens shall be performed for the qualitative assessment of bond resistance of the base material and cladding metal. No separations of the cladding in bending shall be a performance criterion. Three test specimens shall be taken from each plate end for bend test. One bend test shall be carried out with the cladding metal on the tensioned side and another with the cladding layer on the compressed side. The third test specimen shall be subject to transverse bending with the cladding vertically oriented. The procedure for test specimens' preparation and test performance shall comply with the manufacturer's documentation, national or international standards.

3.17.4.1.3 Shear test on the cladding metal.

Two test specimens shall be taken from each plate end for shear testing. The specimen axis shall be transverse to the rolling direction.

The test shall be performed according to GOST 10885, ASTM 264 or DIN 50162. The shear strength shall be at least 140 N/mm^2.

3.17.4.1.4 Resistance against intergranular corrosion.

The cladding metal shall be resistant to intergranular corrosion.

The corrosion resistance tests for clad steel shall be carried out in compliance with a national or international standard. In any case the test procedure shall be preliminarily agreed with the Register.

The resistance against intergranular corrosion shall be checked for each metal heat used for cladding.

3.17.4.1.5 Z-properties.

Z-properties shall be determined in clad steel with the base material 20 mm to 100 mm thick and a yield stress of up to 690 MPa inclusive.

Prior to test specimens' preparation for determining the Z-properties, the cladding metal shall be completely removed.

The Z-properties criterion is the value of the reduction in cross-sectional area in testing a cylindrical test specimen for axial tension to failure. The specimen shall be cut out so that its longitudinal axis is perpendicular to the plate plane and its center is the center of the base metal thickness.

N o t e . Selecting the test specimen standard size, two key factors shall be considered:
parallel length diameter *d*;
repetition factor *l/d* or the parallel length *l* to diameter *d* ratio.
Minimum values: d_{min} = 4 mm; l_{min} = 1,5*d*.

The use of d_{min} and l_{min} allows to prepare a solid specimen of 4 mm in diameter without welded extensions at the metal thickness within 18 mm to 27 mm. The solid specimen of 6 mm in diameter may be used for the metal thickness within 27 mm to 45 mm, and of 10 mm in diameter, over 45 mm.

For MODU and FOP special purpose structures the average value of the relative reduction of area Z_z of three test specimens taken from each plate in the through base material thickness direction of a clad plate shall comprise at least 35 % with one test result allowed below 35 %, but not less than 25 %.

For MODU and FOP primary structures the average value of the reduction in area Z_z of three tested specimens shall comprise at least 25 % with one test result allowed below 25 %, but not less than 15 %.

Z-steel for the clad steel base material shall comply with the requirements of 3.14 for Z35 and Z25 grade steels. The procedure for determining the clad steel plybond strength shall be approved by the Register.

If the value Z_z obtained is below the specified minimum value or if one individual test result is less than the specified one, additional tests on three new test specimens shall be carried out. The average of the results of the six tests shall not be less than the specified value. No individual result from the three new series shall be less than the specified minimum value.

3.17.4.1.6 The crack and cold resistance of the base material shall be defined in tests by procedures given in 2.2.10.

Test criteria are given in 3.5.3.3.5.

3.17.4.1.7 Tests of welded joints for resistance against intergranular corrosion.

3.17.4.1.7.1 Welded joints of clad steel shall be subject to intergranular corrosion test in accordance with 6.7.3.7, Part III "Technical Supervision during Manufacture of Materials" of the Rules for Technical Supervision during Construction of Ships and Manufacture of Materials and Products for Ships.

3.17.4.1.7.2 The welded joint resistance against intergranular corrosion shall be checked for each welding process for each batch of clad plates which have the cladding from one batch and made in a similar manner.

3.17.4.1.7.3 The procedure for testing welded joints for the resistance against intergranular corrosion shall be previously agreed with the Register and shall meet the requirements of Section 2.

3.17.4.2 The tests scope during steelmaking at the Register-recognized manufacturer shall be determined in accordance with the Register-approved documentation considering the additional contract requirements, if any.

3.17.4.2.1 The tests scope for the base metal of normal and higher strength steels shall comply with the requirements of 3.2, and of higher strength Grade F steel, with the requirements of 3.5, of high strength steel, with the requirements of 3.13 and of steel with specified through thickness properties, with the requirements of 3.14.

3.17.4.2.2 Besides the above, testing can be performed to the following extent:

determination of plybond strength in bending three test specimens. One specimen is bent with the cladding on the tensioned side and another, with the cladding on the compressed side. The third one shall be tested for transverse bending with the cladding vertically oriented;

determination of shear strength of the cladding;

determination of the cladding metal resistance against intergranular corrosion according to 3.17.4.1.4;

all the plates are subject to the ultrasonic testing of the continuity of the cladding and base metal adhesion over the entire surface of the plate. The continuity characteristics and the ultrasonic testing method shall comply with the requirements of the manufacturer's documentation, national or international standards.

The test scope shall be agreed with the Register before the commencement of the technical supervision at the manufacturer.

3.17.5 Inspection.

3.17.5.1 All plates are subject to surface inspection. The manufacturer shall ensure the absence of unacceptable defects.

The quality of the plate surface shall be checked by surveyor to the Register after the manufacturer's checking.

3.17.5.2 The cladding metal surface condition shall meet the requirements of 3.16.2.4. No scale, annealing colors and other defects which may affect the chemical durability and the machinability of clad plates are acceptable.

The surface defects caused by a method of manufacturing are allowed if their depth is within the minus deviations of the cladding metal thickness specified in Table 3.17.5.7.

3.17.5.3 The cladding metal surface defects being within a tolerance for its thickness shall be ground in such a way that a smooth transition from a restored area to the surface of the rest of the metal is ensured. The residual cladding shall have a thickness not less than the nominal one considering the tolerance for a lower dimension in Table 3.17.5.7.

3.17.5.4 The surface defects with the cladding thickness after grinding less than the permissible one shall be eliminated by welding provided the total area of all rebuilt defects does not exceed 5 % of the cladding area.

All the plates are subject to ultrasonic testing.

3.17.5.5 If, after grinding of the defect, the remaining thickness of the cladding is less than half of the guaranteed nominal thickness, it is necessary to replace the cladding by tapering and to rebuild the whole of the cladding metal by welding.

3.17.5.6 The quality of the base metal and cladding metal adhesion shall be determined by ultrasonic testing which shall be specified in the manufacturer's documentation. Continuity defects which exceed the values specified in the technical conditions, specification or relevant standard shall be repaired or eliminated.

The repair procedure by rebuilding shall be agreed with the Register considering the following conditions.

3.17.5.6.1 The rebuilding shall be performed by qualified welders using the materials and methods approved by the Register.

3.17.5.6.2 All buildings-up shall be free from cracks, lacks of fusion, undercuts, slags and other defects which can degrade cladding quality. If the welding process is associated with flashing of the base metal, two layers of cladding metal as a minimum shall be built up on it.

3.17.5.6.3 Following welding, the rectified defect shall be ground flush with the cladding surface. After final repairs the plates shall be submitted to surveyor to the Register. The quality of defects elimination shall be proved by non-destructive testing.

3.17.5.6.4 The manufacturer shall submit to the surveyor a report on each rectification by rebuilding wherein the dimensions and location of defects, procedure for repairs by rebuilding, type of heat treatment if required, and the results of checking the defects elimination quality shall be specified.

3.17.5.6.5 Rectification of the base material surface defects by welding is not allowed.

3.17.5.7 Limiting deviations of a cladding thickness, unless stricter tolerances are specified in an order, shall correspond to those given in Table 3.17.5.7. The cladding thickness shall be measured at a distance of not less than 10 mm from a plate edge.

3.17.6 Marking shall be carried out according to the requirements of 1.4.

Table 3.17.5.7

Limiting deviations of cladding metal thickness

Nominal thickness, mm	Permissible deviation, mm
≥ 2,0 < 3,0	±0,20
≥ 3,0 < 3,5	±0,30
≥ 3,5 < 4,0	±0,35
≥ 4,0 < 5,0	±0,40
≥ 5,0	±0,45

3.18 NORMAL AND HIGHER STRENGTH CORROSION-RESISTANT STEELS FOR CARGO OIL TANKS

3.18.1 Scope of application.

3.18.1.1 These requirements apply to normal and higher strength corrosion-resistant steels when such steel is used as the alternative means of corrosion protection for cargo oil tanks as specified in regulation II-1/3-11 of SOLAS-74 (IMO resolution MSC.289(87) "Performance Standard for Alternative Means of Corrosion Protection for Cargo Oil Tanks of Crude Oil Tankers").

3.18.1.2 The requirements are primarily intended to apply to steel products of the following types and thickness:

steel plates and wide flats:

all grades: up to 50 mm in thickness;

sections and bars:

all grades: up to 50 mm in thickness.

3.18.1.3 Normal and higher strength corrosion-resistant steels as defined within these requirements are steels whose corrosion resistance performance in the bottom or top of the internal cargo oil tank is tested and approved to satisfy the requirements in IMO resolution MSC.289(87) in addition to other relevant requirements for structural steel, strength and construction. It is not intended that such steels be used for corrosion-resistant applications in other ship areas that are outside of those specified in regulation II-1/3-11 of SOLAS-74 (IMO resolution MSC.289(87)).

3.18.1.4 Since corrosion-resistant steels described in this Chapter are similar to the ship steels as specified in 3.2, the basic requirements of 3.2 apply to these steels except where modified by this Chapter.

3.18.1.5 The weldability of corrosion-resistant steels is similar to those given in 3.2, therefore welding requirements specified in Sections 4 and 6, Part XIV "Welding" of the Rules as well as of Sections 5 and 6, Part III "Technical Supervision during Manufacture of Materials" of the Rules for Technical Supervision during Construction of Ships and Manufacture of Materials and Products for Ships also apply except as modified by the requirements of this Chapter.

3.18.2 Approval.

3.18.2.1 All materials shall be manufactured at works recognised by the Register (having Recognition Certificate for Manufacturer in accordance with 1.3 of the Rules and Section 2, Part III "Technical Supervision during Manufacture of Materials" of the Rules for Technical Supervision during Construction of Ships and Manufacture of Materials and Products for Ships).

3.18.2.2 In addition to the tests carried out for Recognition Certificate for Manufacturer as specified in 3.18.2.1, corrosion tests shall be carried out in accordance with 3.18.17. In the Recognition Certificate for Manufacturer a special mark may be entered for application in one of the following areas of a cargo oil tank:

.1 lower surface of strength deck and surrounding structures;

.2 upper surface of inner bottom plating and surrounding structures;

.3 both strength deck and inner bottom plating.

3.18.2.3 It is the manufacturer's responsibility to assure that effective process and production controls in operation are adhered to within the manufacturing specifications agreed upon with the Register. If the process or production controls are changed in any way, or any product fails to meet specifications, the manufacturer shall issue a report explaining the reasons, and, in the instance of product, which fails to meet specifications, the measures to prevent recurrence. The complete report shall be submitted to the surveyor to the Register along with such additional information as the surveyor may require. Each affected piece shall be tested to the satisfaction of the surveyor to the Register. The frequency of testing for subsequent products is at the discretion of the Register with regard to development and performance of the particular arrangements by manufacturer.

3.18.3 Methods of manufacture.

3.18.3.1 Methods of manufacture, deoxidation practice and rolling practice shall be in accordance with 3.2.

3.18.4 Chemical composition.

3.18.4.1 The chemical composition of samples taken from each ladle of each cast shall be determined by the manufacturer in an adequately equipped and competently staffed laboratory and shall be in accordance with the requirements of 3.2.

3.18.4.2 The manufacturer will establish a relationship of all the chemical elements, which affect the corrosion resistance. The chemical elements added or controlled to achieve this shall be specifically verified for acceptance. Verification shall be based on the ladle analysis of the steel.

3.18.4.3 The manufacturer's declared analysis will be accepted subject to periodic random checks.

3.18.4.4 The carbon equivalent shall be in accordance with 3.2.

3.18.5 Condition of supply.

3.18.5.1 All materials shall be supplied in one of the supply conditions specified in 3.2.

3.18.6 Mechanical properties.

3.18.6.1 Tensile testing and Charpy V-notch impact testing shall be carried out in accordance with 3.2.

3.18.7 Freedom from defects.

3.18.7.1 The steel shall be reasonably free from segregations and non-metallic inclusions. The finished material shall have a workmanlike finish and shall be free from internal and surface defects prejudicial to the use of the material for the intended application.

3.18.7.2 The acceptance criteria for surface finish and procedures for the repair of defects, as detailed in 3.2, shall be observed.

3.18.8 Tolerances.

3.18.8.1 Unless otherwise specified, the thickness tolerances in 3.2 are applicable.

3.18.9 Identification of materials.

3.18.9.1 The steelmaker shall adopt a system for the identification of ingots, slabs and finished products, which will enable the material to be traced to its original cast.

3.18.9.2 The surveyor to the Register shall be given full facilities for so tracing the material when required.

3.18.10 Testing and inspection.

3.18.10.1 Facilities for inspection.

3.18.10.1.1 The manufacturer shall afford the surveyor to the Register all necessary facilities and access to all relevant parts of the works to enable him to verify that the approved process is adhered to, for the selection of test materials, and the witnessing of tests, as required by the Rules, and for verifying the accuracy of the testing equipment.

3.18.10.2 Testing procedures.

3.18.10.2.1 The prescribed tests and inspections shall be carried out at the place of manufacture before dispatch. The test specimens and procedures shall be in accordance with Section 2. All the test specimens shall be selected, stamped and marked by the surveyor to the Register and tested in his presence, unless otherwise specified.

3.18.10.3 Through thickness tensile tests.

3.18.10.3.1 If plates and wide flats with thickness of 15 mm and over are ordered with through thickness properties, the through thickness tensile test in accordance with 2.2.2.7 shall be carried out.

3.18.10.4 Ultrasonic testing.

3.18.10.4.1 If plates and wide flats are ordered with ultrasonic testing, this shall be made in accordance with the standards recognized by the Register.

3.18.10.5 Surface inspection and dimensions.

3.18.10.5.1 Surface inspection and verification of dimensions are the responsibility of the steel maker. The acceptance by the surveyor to the Register shall not absolve the steel maker from this responsibility.

3.18.11 Test material.

3.18.11.1 Sampling and preparation of test samples shall be in accordance with 3.2.

3.18.12 Test specimens.

3.18.12.1 Mechanical test specimens.

3.18.12.1.1 The dimensions, orientation and location of the tensile and Charpy V-notch test specimens within the test samples shall be in accordance with Section 2 and 3.2.

3.18.13 Scope of testing.

3.18.13.1 Scope of testing and the corresponding number of tensile and Charpy V-notch impact test specimens shall be in accordance with Section 2 и 3.2.

3.18.14 Retest procedures.

3.18.14.1 Retest procedures shall be in accordance with 1.3.2.

3.18.15 Marking.

3.18.15.1 Every finished product shall be clearly marked by the maker in at least one place with the Register brand and the following particulars:

.1 unified identification mark for the grade of steel (e.g. A36);

.2 steel plates that have complied with the requirements of the Rules shall be marked with a designation by adding a corrosion designation to the unified identification mark for the grade of steel. Example of designation: A36 RCB;

.3 the corrosion resistant steel shall be designated according to its area of application as follows:

lower surface of strength deck and surrounding structures — RCU;

upper surface of inner bottom plating and surrounding structures — RCB;

both strength deck and inner bottom plating — RCW;

.4 steel supplied in the thermo-mechanically controlled process condition shall have the letters "TM" added after the identification mark but before the corrosion designation (e.g. E36 TM RCU Z35);

.5 name or initials to identify the steelworks;

.6 cast or other number to identify the piece;

.7 if required by the purchaser, his order number or other identification marks.

3.18.15.2 The above particulars, but excluding the manufacturer's name or trade marks, where this is embossed on finished products shall be encircled with paint or otherwise marked so as to be clearly legible.

3.18.15.3 Where a number of light materials are securely fastened together in bundles the manufacturer may mark only the top piece of each bundle, or alternatively, a firmly fastened durable label containing the marking may be attached to each bundle.

3.18.15.4 In the event that any material bearing the Register marking fails to comply with the test requirements, the marking shall be unmistakably defaced by the manufacturer.

3.18.16 Documentation.

3.18.16.1 Register and Manufacturer's Certificate shall be thoroughly verified before the material application.

3.18.16.2 The number of copies required shall be specified by the Register.

3.18.16.3 The documents shall be a submitted in either electronic or paper format.

3.18.16.4 Separate submission of documents for each grade of steel is permitted.

3.18.16.5 The document (Register and Manufacturer's Certificate) shall contain, in addition to the description, dimensions, etc., of the material, at least the following particulars as a minimum:

.1 purchaser's order number and if known the hull number, for which the material is intended;

.2 identification of the cast and product, including, where appropriate, the test specimen number;

.3 identification of the steelworks;

.4 identification of the grade of steel and the manufacturer's brand name;

.5 ladle analysis (for chemical elements specified in 3.2);

.6 if the steel is approved in accordance with 3.4.2, the weight percentage of each chemical element added or intentionally controlled for improving corrosion resistance;

.7 condition of supply when other than as rolled i.e. normalised, controlled rolled or thermo-mechanically rolled;

.8 results of mechanical tests.

3.18.16.6 Before the Certificate is issued, the manufacturer is required to furnish the surveyor to the Register with a written declaration stating that the material has been made by an approved process and that it has been subjected to and has withstood satisfactorily the required tests in the presence of the surveyor to the Register. The Register name shall appear on the Manufacturer's Certificate. The following form of declaration will be accepted if stamped or printed on each test certificate or shipping statement with the name of the steelworks and initialled for the makers by an authorized official: "We hereby certify that the material has been made by an approved process and has been satisfactorily tested in accordance with the Register Rules".

3.18.17 Additional approval procedure for corrosion-resistant steel.

3.18.17.1 Scope.

3.18.17.1.1 Recognition by the Register (obtaining by manufacturer of Recognition Certificate for Manufacturer) and approval of corrosion-resistant steel shall be carried out in accordance with 1.3 of the Rules and Section 2, Part III "Technical Supervision during Manufacture of Materials" of the Rules for Technical Supervision during Construction of Ships and Manufacture of Materials and Products for Ships together with the additional requirements for corrosion testing specified in this Part.

3.18.17.1.2 The corrosion tests and acceptance criteria shall be in accordance with the Appendix of the Annex to Performance Standard for Alternative Means of Corrosion Protection for Cargo Oil Tanks of Crude Oil Tankers (IMO resolution MSC.289(87)).

3.18.17.2 Application for approval.

3.18.17.2.1 The manufacturer shall submit to the Register a request for approval, which shall include the following:

.1 corrosion test plan and details of equipment and test environments;

.2 technical data related to product assessment criteria for confirming corrosion resistance;

.3 the technical background explaining how the variation in added and controlled elements improves corrosion resistance;

.4 the grades, the brand name and maximum thickness of corrosion-resistant steel to be approved. Designations for corrosion-resistant steels are given in Table 3.18.17.2.1.4;

.5 the welding processes and the brand name of the welding consumables to be used for approval.

Table 3.18.17.2.1.4

Designations for corrosion-resistant steels

Type of steel	Location where steel is effective	Corrosion-resistance designation
Rolled steel for hull	For lower surface of strength deck and surrounding structures (ullage space)	RCU
	For upper surface of inner bottom plating and surrounding structures	RCB
	For both strength deck and inner bottom plating	RCW

3.18.17.3 Approval of test program.

3.18.17.3.1 The test program submitted by the manufacturer shall be reviewed and agreed with the Register. Approved program returns to the manufacturer for acceptance. Tests that need to be witnessed by the surveyor to the Register shall be identified.

3.18.17.3.2 Method for selection of test samples shall satisfy the following.

3.18.17.3.2.1 The numbers of test samples shall be in accordance with the requirements of the Appendix of the Annex to Performance Standard for Alternative Means of Corrosion Protection for Cargo Oil Tanks of Crude Oil Tankers (IMO resolution MSC.289(87)).

3.18.17.3.2.2 The number of casts and test samples selected shall be sufficient to make it possible to confirm the validity of interaction effects and/or the control range (upper limit, lower limit) of the elements, which are added or intentionally controlled, for improving the corrosion resistance. Where agreed, this may be supported with data submitted by the manufacturer.

3.18.17.3.2.3 The testing program and tests are carried out in accordance with 2.2.5.2.3 (2.2.5), Part III "Technical Supervision during Construction of Materials" of the Rules for Technical Supervision during Construction of Ships and Manufacture of Materials and Products for Ships.

3.18.17.3.3 In addition to 3.18.17.3.2.3, the additional tests may be carried out in the following cases:

.1 when the Register determines that the control range is set by the theoretical analysis of each element based on existing data, the number of corrosion resistance tests conducted in accordance with the Appendix of the Annex to Performance Standard for Alternative Means of Corrosion Protection for Cargo Oil Tanks of Crude Oil Tankers (IMO resolution MSC.289(87)) is too few to adequately confirm the validity of the control range of chemical composition;

.2 when the Register determines that the data of the corrosion resistance test result obtained for setting the control range of chemical composition varies too widely;

.3 when the Register determines that the validity of the corrosion resistance test result for setting the control range of chemical composition is insufficient, or has some flaws;

.4 when the surveyor to the Register has not attended the corrosion resistance tests for setting the control range of chemical composition, and the Register determines that additional testing is necessary in order to confirm the validity of the test result data; and

.5 when the Register determines that it is necessary, for reasons other than cases in 3.18.17.3.3.1 — 3.18.17.3.3.4.

3.18.17.3.4 The chemical composition of the corrosion-resistant steel shall be within the range specified for rolled steel for hull. Elements to be added for improving the corrosion resistance and for which content is not specified shall be generally within 1 % in total.

3.18.17.4 Carrying out the approval test.

3.18.17.4.1 The manufacturer shall carry out the approval test for corrosion-resistant steel and for obtaining a Recognition Certificate for Manufacturer in accordance with the approved test program.

3.18.17.5 Attendance of the surveyor to the Register for test.

3.18.17.5.1 The surveyor to the Register shall be present, as a rule, when the test samples for the approval test are being identified and for approval tests (refer also to 3.1).

3.18.17.6 Test results.

3.18.17.6.1 After completion of the approval test for corrosion-resistant steel and for obtaining a Recognition Certificate for Manufacturer, the manufacturer shall produce the report of the approval test and submit it to the Register.

3.18.17.6.2 The Register will give approval for corrosion-resistant steel and issue a Recognition Certificate for Manufacturer where approval tests are considered by the Register to have given satisfactory results based on the data submitted in accordance with this Section.

3.18.17.6.3 The Recognition Certificate for Manufacturer shall contain the manufacturer's name, the period of validity of the Certificate, the grades and thickness of the steel approved, welding methods and welding consumables approved.

3.18.17.7 Acceptance criteria for results of corrosion resistance tests of welded joint.

3.18.17.7.1 The results shall be assessed by the Register in accordance with the acceptance criteria specified in the Appendix of the Annex to Performance Standard for Alternative Means of Corrosion Protection for Cargo Oil Tanks of Crude Oil Tankers (IMO resolution MSC.289(87)).

3.19 YP47 STEELS AND BRITTLE CRACK ARREST STEELS

3.19.1 Scope.

3.19.1.1 General.

3.19.1.1.1 The requirements of this Chapter apply to YP47 steels and brittle crack arrest steels as required by BCA (Brittle Crack Arrest), used in structural members of container ships in accordance with 3.1 of Part II "Hull".

3.19.1.1.2 Unless otherwise specified in this Chapter, steel shall comply with the requirements of 3.2.

3.19.1.2 YP47 steels.

3.19.1.2. 1 Steels designated as YP47 refer to steels with a specified minimum yield point of 460 MPa.

3.19.1.2.2 The YP47 steels may be applied to longitudinal structural members in the upper deck region of container ships (such as hatch side coaming, hatch coaming top and the attached longitudinals, etc.). Special consideration shall be given to the application of YP47 steels for other hull structures by the Register.

3.19.1.2.3 This Chapter gives the requirements for YP47 steels in thickness greater than 50 mm and not greater than 100 mm intended for the upper deck region of container ships. Requirements for YP47 steels outside the scope of the said thickness range shall be agreed with the Register.

3.19.1.3 BCA steel.

3.19.1.3.1 The brittle crack designation may be assigned to YP36 and YP40 steels and YP47 steels specified in 3.2, which also meet the additional brittle crack arrest requirements and properties defined in this Chapter.

3.19.1.3.2 The requirements for application of BCA steels are specified in 3.1 of Part II "Hull", and apply to longitudinal structural members in the upper deck region of container ships (such as hatch side coaming, upper deck, hatch coaming top and the attached longitudinals, etc.).

3.19.1.3.3 The requirements of this Chapter apply to brittle crack arrest steels with thickness range of over 50 mm and not greater than 100 mm as specified in Table 3.19.2.2.4.

3.19.2 Steel specifications.

3.19.2.1.1 Chemical composition of YP47 steel shall comply with the requirements of Table 3.19.2.1.1.

3.19.2.1.2 Mechanical properties for YP47 steels shall comply with the requirements of Table 3.19.2.1.2.

3.19.2.2 BCA steels.

3.19.2.2.1 Brittle crack arrest steels are defined as steel plate with the specified brittle crack arrest properties measured by either the brittle crack arrest toughness K_{ca} or crack arrest temperature (*CAT*).

3.19.2.2.2 In addition to the mechanical properties for YP36 and YP40 required in 3.2 and Table 3.19.2.1.2 for YP47, brittle crack arrest steels shall comply with the requirements specified in Table 3.19.2.2.2.

3.19.2.2.3 The brittle crack arrest properties specified in Table 3.19.2.2.2 shall be evaluated for the products during the recognition of the manufacturer. Test specimens shall be taken from each piece during certification of products as agreed by the Register.

3.19.2.2.4 Chemical composition of brittle crack arrest steels shall comply with Table 3.19.2.2.4.

Table 3.19.2.1.1

Chemical composition and deoxidation practice for YP47 steels without specified BCA properties

Grade	PCEH47
Deoxidation Practice	Killed and fine grain treated
Chemical Composition, % (ladle samples)[1, 2]	
C_{max}	0,18
Mn	0,90 — 2,00
Si_{max}	0,55
P_{max}	0,020
S_{max}	0,020
$Al_{(acid\ soluble\ min)\ min}$	0,015 [3, 4]
Nb	0,02 — 0,05[4, 5]
V	0,05 — 0,10[4, 5]
Ti_{max}	0,02 5
Cu_{max}	0,35
Cr_{max}	0,25
Ni_{max}	1,0
Mo_{max}	0,08
$C_{eq\ max}$	0,49
$P_{cm\ max}$[5]	0,22

[1] Where additions of any other element have been made as part of the steelmaking practice subject to approval by the Register, the content shall be indicated on Register Certificate.

[2] Variations in the specified chemical composition may be allowed subject to approval by the Register.

[3] Refer to Note 3 to Table 3.2.2-2.

.4 Refer to Note 4 to Table 3.2.2-2.

[5] The total aluminum content shall be not less than 0,12 %.

6. The carbon equivalent C_{eq} value shall be calculated from the ladle analysis using the following formula:

$$C_{eq} = C + \frac{Mn}{6} + \frac{Cr + Mo + V}{5} + \frac{Ni + Cu}{15} (\%).$$

[7] Cold cracking susceptibility P_{cm} value shall be calculated using the following formula:

$$P_{cm} = C + \frac{Si}{30} + \frac{Mn}{20} + \frac{Cu}{20} + \frac{Ni}{60} + \frac{Cr}{20} + \frac{Mo}{15} + \frac{V}{10} + 5B(\%).$$

Table 3.19.2.1.2

Conditions of supply, grade and mechanical properties for YP47 steels without specified BCA properties.

Supply condition	Grade	Tensile test			Impact test			
		Yield Strength R_{eH} min, MPa	Tensile Strength R_m, MPa	Elongation A_5, min, %	Test Temprature, C°	Average Impact Energy (J) min. KV_L for t thickness mm, min, Дж		
						50 < t ≤ 70	70 < t ≤ 85	85 < t ≤ 100
TMCP	PCEH47	460	570 — 720	17	–40	53	64	75

Notes: 1. The additional requirements for YP47 steel with brittle crack arrest properties is specified in 3.19.2.2.
2. Other conditions of supply shall be in accordance with the Register procedures.

Table 3.19.2.2.2

Requirement of brittle crack arrest properties for brittle crack arrest steels BCA

Steel grade index[1]	Thickness range (mm)	Brittle crack arrest properties[2, 3]	
		Brittle Crack Arrest Toughness K_{ca} at –10 °C $\mathrm{N/mm^{3/2}}$[4]	Crack Arrest Temperature CAT (°C)[5]
BCA1	50 < t ≤ 100	6000	–10 or below
BCA2	80 < t ≤ 100[6]	8000	[7]

[1] BCA1 or BCA2 index shall be affixed to the steel grade designation (e.g. PCEH40BCA1, PCEH47BCA1, PCE47BCA2).
[2] Brittle crack arrest properties for brittle crack arrest steels are to be verified by either the brittle crack arrest toughness K_{ca} or crack arrest temperature (*CAT*).
[3] Where small-scale alternative tests are used for product testing (batch release testing), these test methods shall be approved by the Register.
[4] K_{ca} value is to be obtained by the brittle crack arrest test specified in 2.2.11.1.
[5] *CAT* shall be obtained by the test method specified in 2.2.11.3.
[6] Steel with thicknesses of 80 mm or lower may be approved by Register.
[7] Criterion of *CAT* for brittle crack arrest steels corresponding to K_{ca} = 8000 N/mm$^{3/2}$ shall be approved by the Register.

Table 3.19.2.2.4

Chemical composition and deoxidation practice for BCA steels

Grade	PCE36BCA	PCE40BCA	PCE47BCA
Deoxidation Practice	Killed and fine grain treated		
Chemical Composition % (ladle samples)[1, 2, 3]			
C_{max}	0,18		0,18
Mn	0,90 — 2,00		0,90 — 2,00
Si_{max}	0,50		0,55
P_{max}	0,020		0,020
S_{max}	0,020		0,020
$Al_{(растворимый\ в\ кислоте)\ min}$	0,015[4, 5]		0,015[4, 5]
Nb	0,02 — 0,05[5, 6]		0,02 — 0,05[5, 6]
V	0,05 — 0,10[5, 6]		0,05 — 0,10[5, 6]
Ti_{max}	0,02[6]		0,02 [6]
Cu_{max}	0,50		0,50
Cr_{max}	0,25		0,50
Ni_{max}	2,0		2,0
Mo_{max}	0,08		0,08
$C_{eq\ max}$[7]			0,55
$P_{cm\ max}$[8]			0,24
	0,47	0,49	
	–		

[1] The requirements of this Table shall replace those of Tables 3.2.2-2 and 3.19.2.1.1 respectively.
[2] Where additions of any other element have been made as part of the steelmaking practice subject to approval by the Register, the content is to be indicated on the Register Certificate.
[3] Variations in the specified chemical composition may be allowed subject to approval of the Register.
[4] Refer to Table 3.2.2-2.
[5] Refer to Table 3.2.2-2.
[6] The total niobium, vanadium and titanium content shall not exceed 0,12 %.
[7] The carbon equivalent C_{eq} value shall be calculated from the ladle analysis using the following formula:

$$C_{eq} = C + \frac{Mn}{6} + \frac{Cr + Mo + V}{5} + \frac{Ni + Cu}{15} (\%).$$

[8] Cold cracking susceptibility P_{cm} value is to be calculated using the following formula:

$$P_{cm} = C + \frac{Si}{30} + \frac{Mn}{20} + \frac{Cu}{20} + \frac{Ni}{60} + \frac{Cr}{20} + \frac{Mo}{15} + \frac{V}{10} + 5B(\%).$$

3.19.3 Manufacturing Approval Scheme.

3.19.3.1 Manufacturing Approval Scheme for YP47 Steels.

3.19.3.1.1 Scope of application.

3.19.3.1.1.1 The present requirements apply to the manufacturing approval scheme for YP47 steels of grade EH47.

3.19.3.1.1.2 Unless otherwise specified in 3.19.3.1, provisions of 2.2.2, Part III "Technical Supervision for the Manufacture of Materials" of the Rules for Technical Supervision During Construction of Ships and Manufacture of Materials and Products for Ships shall be complied with.

3.19.3.1.2 Approval tests during initial survey.

3.19.3.1.2.1 Scope of testing.

3.19.3.1.3.1 Regarding YP47, unless otherwise specified, the requirements shall be applicable to the scope of initial surveys equally along with the shipbuilding steels of other grades.

3.19.3.1.2.2 Type of tests.

3.19.3.1.2.2.1 Brittle fracture initiation test.

Deep notch test or Crack Tip Opening Displacement (*CTOD*) test may be required. Test method shallcomply with the requirements of 2.2.10.

3.19.3.1.2.2.2 Weldability test.

.1 Y-groove weld cracking test (Hydrogen crack test).

The test method is to be in accordance with recognized national standards such as JIS Z 3158-2016 or CB/T 4364-2013. Acceptance criteria shall be tentatively in accordance with the Register's practice.

.2 Brittle fracture initiation test

Deep notch test or CTOD test shall be carried out. Test method and results shall comply with the requirements of 2.2.10. Test criteria shall comply with 3.5.

3.19.3.1.2.2.3 Other tests.

In addition to the requirement specified in 3.19.3.1.2.2.1 and 3.19.3.1.2.2.2 above, the approval tests required for steels are specified in 3.13.

3.19.3.2 Manufacturing Approval Scheme for BCA steels.

3.19.3.2.1 Scope of application.

3.19.3.2.1.1 The requirements of 3.19.3.2 apply to the manufacturing approval scheme for brittle crack arrest steels, as specified in 3.19.1.3.

3.19.3.2.1.2 Unless otherwise specified in 3.19.3.2, provisions of 2.2.2 of Part III "Technical Supervision for the Manufacture of Materials" of the Rules for Technical Supervision During Construction of Ships and Manufacture of Materials and Products for Ships shall be complied with.

3.19.3.2.2 Approval application.

3.19.3.2.2.1 Documents to be submitted.

The manufacturer shall submit the following documents together with those required in 2.2.2.2.1. Part III "Technical Supervision for the Manufacture of Materials" of the Rules for Technical Supervision During Construction of Ships and Manufacture of Materials and Products for Ships:

.1 in-house test reports of the brittle crack arrest properties of the steels intended for approval;

.2 approval test program for the brittle crack arrest properties to be approved by RS.

.3 production test procedure for the brittle crack arrest properties to be approved by RS.

3.19.3.2.3 Approval tests.

3.19.3.2.3.1 Scope of testing.

3.19.3.2.3.1.1 The extent of the test program is specified in 3.19.3.2.3.

If the manufacturing process and mechanism to ensure the brittle crack arrest properties for the steels intended for approval are same, provisions of 2.2.2, Part III "Technical Supervision

for the Manufacture of Materials" of the Rules for Technical Supervision During Construction of Ships and Manufacture of Materials and Products for Ships shall be complied with for the extent of the approval tests.

3.19.3.2.3.1.2 The number of test samples and test specimens may be increased when deemed necessary by the Register, based on the in-house test reports of the brittle crack arrest properties of the steels intended for approval performed under ACS supervision.

3.19.3.2.3.2 Type of tests.

3.19.3.2.3.2.1 Brittle crack arrest tests shall be carried out in accordance with 2.2.11 in addition to the approval tests specified in 2.2.2.3.6, Part III "Technical Supervision for the Manufacture of Materials" of the Rules for Technical Supervision During Construction of Ships and Manufacture of Materials and Products for Ships and/or 3.19.3.2.3.3.

3.19.3.2.3.2.2 In the case of applying for addition of the specified brittle crack arrest properties index for PCEH36, PCEH40 and PCEH47 steels of which, manufacturing process has been approved by the Register, brittle crack arrest tests, chemical analyzes, tensile test and Charpy V-notch impact test shall be carried out in accordance with the provisions of this Chapter and 2.2.2 of Part III "Technical Supervision for the Manufacture of Materials" of the Rules for Technical Supervision During Construction of Ships and Manufacture of Materials and Products for Ships.

3.19.3.2.3.3 Test specimens and testing procedure of brittle crack arrest tests.

3.19.3.2.3.3.1 The test specimens of the brittle crack arrest tests shall be taken with their longitudinal axis parallel to the final rolling direction of the test plates.

3.19.3.2.3.3.2 The loading direction of brittle crack tests shall be parallel to the final rolling direction of the test plates.

3.19.3.2.3.3.3 The thickness of the test specimens of the brittle crack arrest tests shall be the full thickness of the test plates.

3.19.3.2.3.3.4 The test specimens and repeat test specimens shall be taken from the same steel plate.

3.19.3.2.3.3.5 The thickness of the test specimen shall be the maximum thickness of the steel plate requested for approval.

3.19.3.2.3.3.6 In the case where the brittle crack arrest properties are evaluated by K_{ca}, the brittle crack arrest test method shall be in accordance with 2.2.11.1. In the case where the brittle crack arrest properties are evaluated by *CAT*, the test method shall be in accordance with 2.2.11.4.

3.19.3.2.3.4 Other tests.

Additional tests may be required when deemed necessary by by the Register in addition to the tests specified above. Scope, test methods and criteria shall be greed with the Register.

3.19.3.2.4 Results.

Provisions of 2.2.11 shall be complied with for the results. Additionally, the results of test items and the procedures shall comply with the test program approved by the Register. In the case where the brittle crack arrest properties are evaluated by K_{ca} or *CAT*, the manufacturer shall also submit to the Register the brittle crack arrest test reports in accordance with 2.2.11.1 for K_{ca} and 2.2.11.4 for *CAT*, accordingly.

3.19.3.2.5 Approval and certification.

Upon satisfactory completion of the survey and tests, the Register issues the Certificate of Recognition for Manufacturer with the grade designation having the index "BCA1" or "BCA2" (e.g. PCEH40BCA1, PCE47BCA1, PCEH47BCA2)

3.19.3.2.6 The Certificate of Recognition for Manufacturer renewal.

The manufacturer shall also submit to RS actual manufacturing records of the approved brittle crack arrest steels within the term of validity of the manufacturing approval certificate in addition to that specified in 2.1.4, Part III "Technical Supervision for the Manufacture of Materials" of the Rules for Technical Supervision During Construction of Ships and Manufacture of Materials and Products for Ships.

N o t e . Chemical composition, mechanical properties, brittle crack arrest properties (e.g. brittle crack arrest test results or small-scale alternative test results) and nominal thickness shall be described in the form of histogram or statistics.

4 COPPER AND COPPER-BASE ALLOYS

4.1 SEMI-FINISHED PRODUCTS OF COPPER AND COPPER-BASE ALLOYS

4.1.1 General.

These requirements apply to semi-finished products of copper and copper-base alloys (rolled, forged, drawn, press-formed, etc.) and castings, which are used in shipbuilding and marine engineering, and the manufacture of which is subject to the Register survey. Semi-finished products of copper and copper-base alloys shall be manufactured at works recognized according to 1.3.1.2.

4.1.2 Chemical composition and mechanical properties.

The chemical composition and mechanical properties of copper and copper-base alloys products such as pipes, plates, bars, rolled sections, forgings and castings shall meet the requirements of appropriate standards or specifications approved by the Register.

When selecting copper-base alloys, one shall consider the required level of mechanical properties at indoor or higher temperatures, corrosion resistance, and other properties determined by their application.

4.1.3 Condition of supply.

If, in the process of manufacture, parts made of copper and copper-base alloys are subjected to heat treatment, the type of heat treatment shall be reported to the Register and stated in the Manufacturer's Certificate for material.

Rolled products made of CuZn alloys (brasses) shall be annealed for stress relieving.

4.1.4 Sampling.

Tensile test samples shall be cut from plate material transversely to the direction of rolling (forging), and from tubes, rods, sections and forgings — longitudinally to the direction of rolling.

Tubes, rods and sections with a diameter (or thickness) of 40 mm and less may be subjected to tensile tests in the rough condition.

Forging samples may be forged separately or forged on the forgings. The samples shall have the same degree of upsetting as the forging in its highest loaded cross-section.

Casting samples may be separately cast, cast-on or cut out from the casting.

In any case, the samples shall be cut after the final heat treatment (in the supply condition).

4.1.5 Scope of testing.

If not otherwise specified, the following samples shall be taken from each batch:

for determination of chemical composition (heat analysis);

for determination of mechanical properties (R_{eH}, R_m, A_5);

for fabrication testing.

The scope of testing for semi-finished products (rolled products, forgings, castings) shall be determined according to RS-agreed standards.

CuZn alloy tubes for heat exchangers shall be subjected to the following tests:

mercuric nitrate or ammonia treatment according to the requirements of appropriate standards (one specimen per lot);

flattening (two specimens cut from two tubes, $H = 3t$);

expanding (two specimens from two tubes, with the angle of mandrel taper α = 45°, and the expansion degree of 30 %);

microstructure check (one specimen per lot).

Average grain diameter shall be 0,01 to 0,05 mm.

Tubes shall be subjected to hydraulic testing; the test pressure shall be determined by standards or specifications.

In justified cases substitution of non-destructive testing for hydraulic testing is permitted.

4.1.6 Inspection.

Products submitted for the Register inspection shall comply with the requirements of corresponding standards or specifications, on the basis of which they are accepted.

The products shall not have defects, which are detrimental for their intended use.

4.1.7 Marking and documentation.

Identification, marking and issued documentation — in accordance with the requirements of 1.4.

4.2 PROPELLER CASTINGS

4.2.1 General.

4.2.1.1 The present requirements apply to the manufacture, inspection and repair procedures of new cast copper alloy propellers, blades and bosses (hubs).

The present requirements may also be used for the repair of propellers damaged in service, subject to prior agreement with the Register.

4.2.1.2 All propellers and their components shall be cast by foundries approved by the Register in compliance with 1.3.1.2. At the time of approval specifications of the propeller materials, manufacturing procedures, repair, non-destructive testing and a description of the foundry facilities, including the maximum capacity of the ladles shall be submitted to the Register. The castings supplied under the Register technical supervision shall be manufactured and tested in accordance with the requirements of this Chapter.

4.2.1.3 The approval tests shall be carried out in compliance with 1.3.2 under the program approved by the Register. The purpose of the tests shall verify that the castings and their quality, including chemical composition and mechanical properties, comply with these requirements.

4.2.1.4 The foundry shall have an adequately equipped laboratory, manned by experienced personnel, for the testing of moulding materials, chemical analyses, mechanical testing, microstructural testing of metallic materials and non-destructive testing. Where testing activities are assigned to other laboratory, such laboratory shall be recognized by an authorized national body and/or Register.

4.2.1.5 The pouring shall be carried out into dried moulds using degassed liquid metal. The pouring shall be controlled as to avoid turbulences of flow. Special devices and/or procedures shall prevent slag flowing into the mould.

4.2.1.6 Subsequent stress relieving heat treatment may be performed to reduce the residual stresses. For this purpose, the manufacturer shall submit a specification containing the details of the heat treatment to the Register for approval (refer to Tables 4.2.8.5.1-1 and 4.2.8.5.1-2).

4.2.1.7 Where the use of alloys alternative to those specified in this Chapter is proposed, particulars of chemical composition, mechanical properties and heat treatment shall be submitted to the Register for approval.

4.2.1.8 It is the manufacturer's responsibility to assure that effective quality, process and production controls during manufacturing are adhered to.

4.2.2 Chemical composition and metallurgical characteristics

The chemical composition of typical copper-base alloys for propellers shall comply with the requirements of Table 4.2.2.

Table 4.2.2

Alloy type	Cu	Al	Mn	Zn	Fe	Ni	Sn	Pb
CU1	52 — 62	0,5 — 3,0	0,5 — 4,0	35 — 40	0,5 — 2,5	max 1,0	max 1,5	max 0,5
CU2	50 — 57	0,5 — 2,0	1,0 — 4,0	33 — 38	0,5 — 2,5	3,0 — 8,0	max 1,5	max 0,5
CU3	77 — 82	7,0 — 11,0	0,5 — 4,0	max 1,0	2,0 — 6,0	3,0 — 6,0	max 0,1	max 0,03
CU4	70 — 80	6,5 — 9,0	8,0 — 20,0	max 6,0	2,0 — 5,0	1,5 — 3,0	max 1,0	max 0,05
Note. Chemical composition shall be determined for the metal of each ladle.								

Note. The main constituents of the microstructure in the copper-base alloys types CU1 and CU2 are alpha and beta phase.

Important properties such as ductility and resistance to corrosion fatigue are strongly influenced by the relative proportion of beta phase (too high percentage of beta phase having a negative effect on these properties). To ensure adequate cold ductility and corrosion fatigue resistance, the proportion of beta phase shall be kept low. The concept of the zinc equivalent shall be used as control since it summarizes the effect of the tendency of various chemical elements to produce beta phase in the structure.

The manufacturer shall maintain records of the chemical analyses of the production casts, which shall be made available to the RS surveyor.

The structure CU1 and CU2 type alloys shall contain an alpha phase component of at least 25 %. The content of alpha phase shall be measured by the manufacturer. The zinc equivalent defined by the following formula shall not exceed a value of 45 %:

zinc equivalent (%) = $100 - \frac{100\,\%\,\mathrm{Cu}}{100+A}$, %,

where $A = \%Sn + 5 \times \%al - 0{,}5 \times \%Mn - 0{,}1 \times \%Fe - 2{,}3 \times \%Ni$

The negative sign in front of the elements Mn, Fe and Ni signifies that these elements tend to reduce the proportion of beta phase.

The micro structure of alloy types CU1 and CU2 shall be verified by determining the proportion of alpha phase. For this purpose, at least one specimen shall be taken from each heat. The proportion of alpha phase shall be determined as the average value of 5 counts.

4.2.3 Mechanical properties.

Mechanical properties of standardized alloys as applied to test specimens taken from separately cast samples shall comply with Table 4.2.3.

Table 4.2.3

Mechanical properties of copper-base alloys for propellers (separately cast samples)

Alloy type	Yield stress $R_{p0,2}$, min, MPa	Tensile strength R_m, min, MPa	Elongation A_5, min, %
CU1	175	440	20
CU2	175	440	20
CU3	245	590	16
CU4	275	630	18

These properties are a measure of the mechanical quality of each heat; and they are generally not representative of the mechanical properties of the propeller casting itself, which may be up to 30 % lower than that of separately cast samples.

The requirements for mechanical properties of cast-on specimens or those cut out from the casting are specified in accordance with the approved documentation.

Copper alloys with mechanical characteristics different from those given in Table 4.2.3 may be allowed only after their approval by the Register in compliance with 1.3.2.

4.2.4 Sampling.

Separately cast samples for determining the mechanical properties of propeller alloys shall be taken from each ladle and shall have the dimensions as shown in Fig. 4.2.4. Samples may be prepared in accordance with the standards approved by the Register. For the purpose of approval of a foundry the tests indicated in 4.2.1.3 may be carried out on separately cast samples and specimens of cast-on metal or casting metal.

4.2.5 Tensile tests and specimens.

Out of each sample at least one cylindrical specimen is machined to undergo the tensile test (refer to Table 2.2.2.3). The tensile strength, proof stress and elongation shall be determined by tensile test.

Generally, the specimens shall be taken from separately cast samples (refer to 4.2.4). The samples shall be cast in moulds made of the same material as the mould for propeller. They shall be cooled down under the same conditions as the propeller. If propellers are subjected to a heat treatment the samples shall be heat treated together with them.

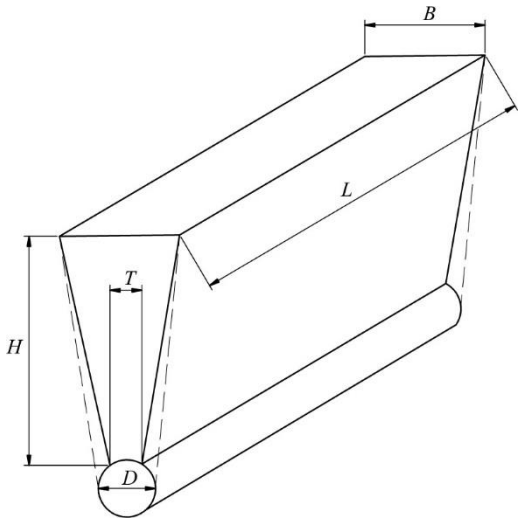

Fig. 4.2.4
Separately cast sample with dimensions in mm: H = 100, B =50, L > 150, T = 15, D = 25

Where use of cast-on samples specimens is approved by the Register, they shall, wherever possible, be located on the blades in an area lying between 0,5R and 0,6R, where R is the radius of the propeller. The sample material shall be removed from the casting by non-thermal procedures, for CU1 and CU2 type alloys the proportion of alpha phase is additionally determined. For this purpose, at least one specimen shall be taken from each cast. The proportion of alpha phase shall be determined as the average value of 5 counts. The requirements of 4.2.2 shall also be complied with.

4.2.6 Severity zones (repair zones).

4.2.6.1 In order to relate the degree of inspection to the criticality of defects in propeller blades and to help reduce the risk of failure by fatigue cracking after repair, propeller blades are divided into the three severity zones designated *A*, *B* and *C* (refer to Figs. 4.2.6.2-1 and 4.2.6.3).

N o t e . Propellers are divided into high skew propellers, i.e. propellers with a skew angle greater than 25°, and low skew propellers with a skew angle of up to 25°.

The skew of the propeller is defined as the angle, in projected view of the blade, between a line drawn through the blade tip and the shaft centreline and a second line through the shaft centreline, which acts as a tangent to the locus of the mid-points of the helical blade section (refer to Fig. 4.2.6.1).

4.2.6.2 Severity zones for low-skew propeller blades.

Z o n e *A* is in the area on the pressure side of the blade, from and including the fillet to 0,4R, and bounded on either side by lines at a distance 0,15 times the chord length C_r from the leading edge and 0,2 times C_r from the trailing edge, respectively, as shown in Fig. 4.2.6.2-1 (C_r is the chord width of the blade on radius 0,4R).

Where the boss radius (R_b) exceeds 0,27R, the other boundary of zone *A* shall be increased to 1,5 R_b.

Z o n e *A* also includes the parts of the separate cast propeller boss, which lie in the area of the windows as described in Fig. 4.2.6.2-2, and the flange and fillet area of controllable pitch and built-up propeller blades as described in Fig. 4.2.6.2-3.

Z o n e *B* is the area on the pressure and suction sides of the blade. On the pressure side zone *B* is the remaining area up to 0,7R (the area within the boundaries of 0,4R and 0,7R plus areas on the leading and trailing edges bounded by lines 0,15C_r and 0,2C_r, respectively, and the line over the blade length with a radius of 0,4R) as described in Fig. 4.2.6.2-1.

On the suction side zone *B* is the area from the fillet to 0,7R.

Zone *C* is the area outside 0,7*R* on both pressure and suction sides of the blade (between 0,7*R* and *R*) as described in Fig. 4.2.6.2-1. It also includes all the surfaces of the boss other than those designated zone *A* above.

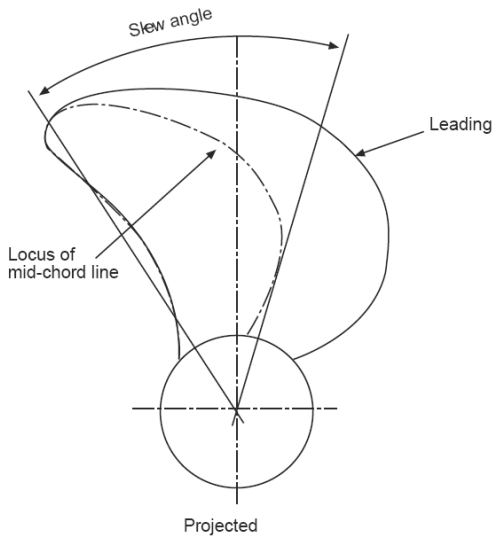

Fig. 4.2.6.1
Definition of skew angle

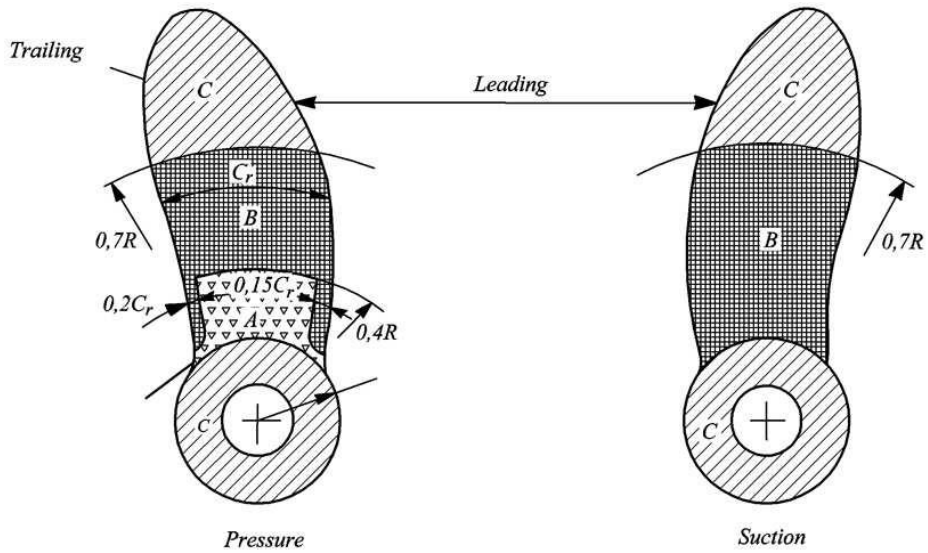

Fig. 4.2.6.2-1
Severity zones for integrally cast low skew propellers, where *R* — propeller radius; *Cr* — chord width at any radius

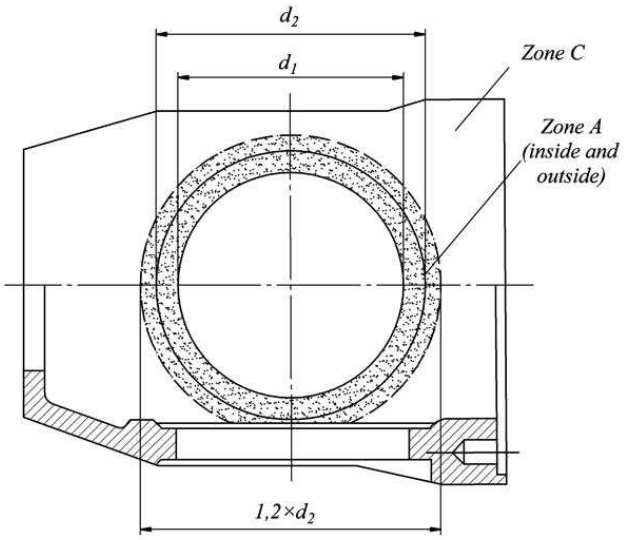

Fig. 4.2.6.2-2
Severity zones for controllable pitch propeller boss

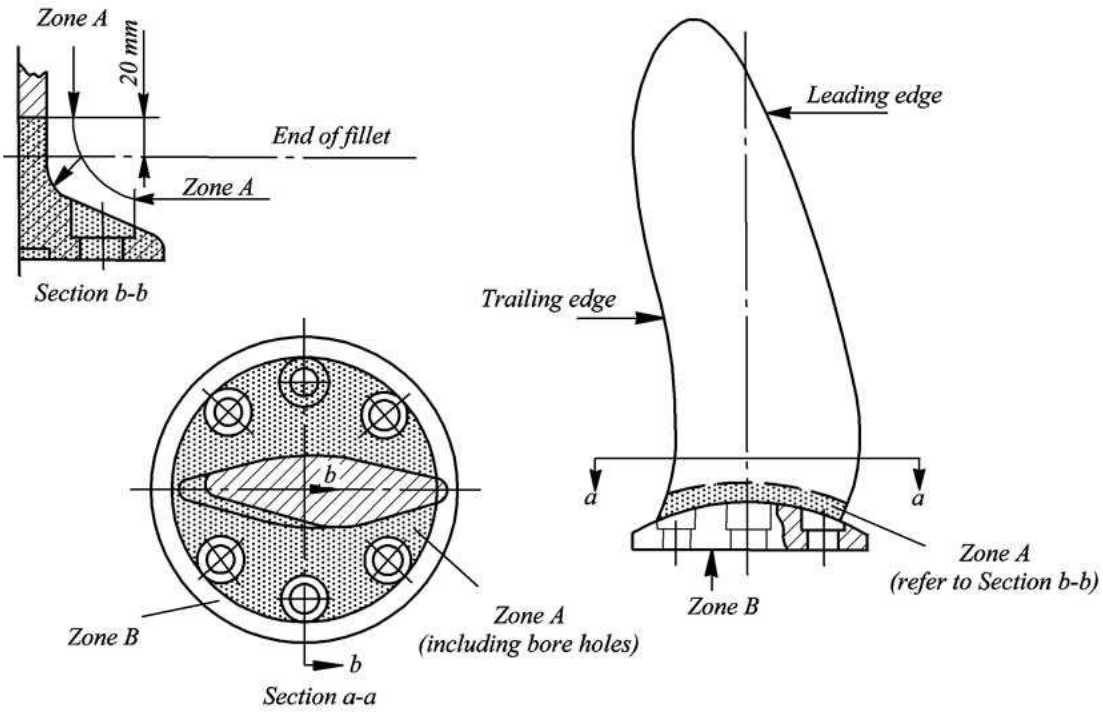

Fig. 4.2.6.2-3
Severity zones for controllable pitch and built-up propeller

4.2.6.3 Severity zones for high-skew propellers.
Z o n e *A* is the area on pressure and suction sides of the blade as described in Fig. 4.2.6.3.

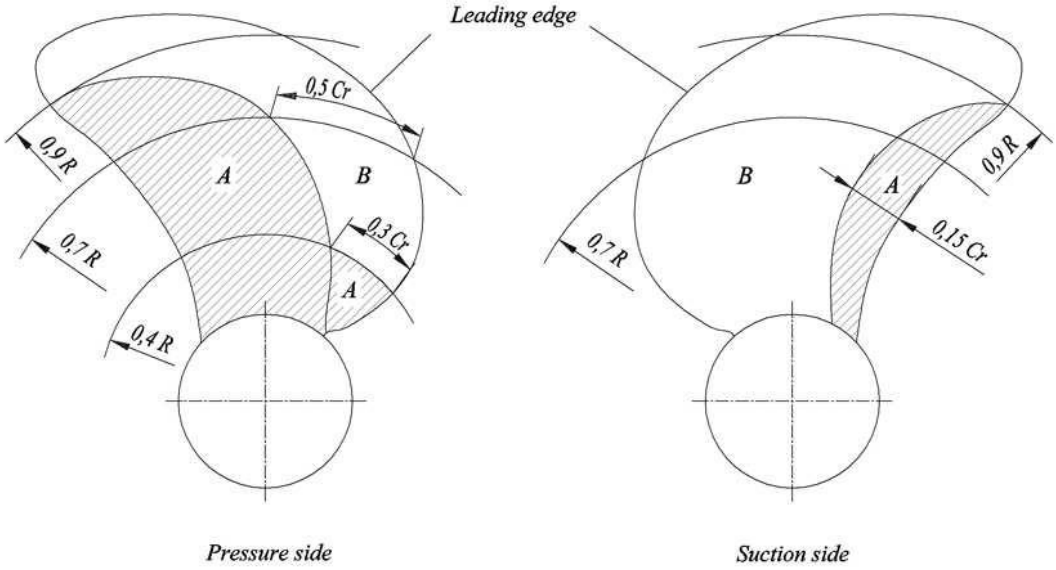

Fig. 4.2.6.3
Severity zones in blades with skew angles greater than 25°

On the pressure face zone *A* is contained within the blade root-fillet and a line running from the junction of the leading edge with the root fillet to the trailing at 0,9*R* and at passing through the mid-point of the blade chord at 0,7*R* and a point situated at 0,3 of the chord length from the leading edge at 0,4*R*. Zone *A* also includes an area between the above line and the edge from the root to the chord at 0,4*R*.

Zone *A* includes an area along the trailing edge on the suction side of the blade from the root to 0,9*R* and with its inner boundary at 0,15 of the chord lengths from the trailing edge.

Zone *B* is the area of the pressure and suction sides of the blade as described in Fig. 4.2.6.3.

Zone *B* includes the blade surfaces not included in zone A.

4.2.6.4 Zone *A* is a region characterized by the highest operating stresses and the greatest thicknesses, and therefore it requires the highest degree of inspection and performance of all repair works.

Zone *B* is also a region where the operating stresses may be high, and therefore welding shall preferably be avoided in repair works.

Zone *C* is a region, in which the operating stresses are low and where the blade thicknesses are relatively small. Repair welding is safer and is permitted in accordance with a procedure approved by the Register.

4.2.7 Inspection.

4.2.7.1 Propeller castings shall be visually tested at all stages of manufacture. The castings shall be subjected to a 100 % visual inspection and measurement in the finished condition by the manufacturer. At the final stage of manufacture the inspection shall include the bore. The castings subject to inspection shall be fettled and their surface prepared for non-destructive testing. Final visual examination shall be carried out by the RS representative. The surface shall be free from defects which may interfere with the use of castings.

Note. Casting defects, which may impair the serviceability of the castings, e.g. major non-metallic inclusions, shrinkage cavities, blow holes and cracks, are not permitted. These defects may be completely removed by one of the methods described in 4.2.8 and repaired within the limits and restrictions for the severity areas. Full description and documentation shall be presented to the surveyor to the Register before commencement of works.

4.2.7.2 The verification of dimensions, the dimensional and geometrical tolerances is the responsibility of the manufacturer. The report on the relevant examinations shall be submitted to the Register. At that, the Register may require checks to be made in the presence of the RS surveyor.

Static balancing shall be carried out on all the propellers in accordance with the documentation approved by the Register. Dynamic balancing is necessary for propellers running above 500 rpm.

4.2.7.3 Non-destructive testing.

Special requirements for testing laboratories carrying out penetrant testing (PT), ultrasonic testing (UT) and magnetic particle (MT) testing are given in 10.3, Part I "General Regulations for Technical Supervision" of the Rules for Technical Supervision during Construction of Ships and Manufacture of Materials and Products for Ships.

4.2.7.3.1 Penetrant testing.

4.2.7.3.1.1 Liquid penetrant testing procedure shall be submitted to the Register and shall meet the requirements of ISO 3452-1:2013 or an RS-agreed standard. The examination criteria are specified in 4.2.7.3.1.2.2.

The severity zone *A* shall be subjected to a liquid penetrant testing in the presence of the RS surveyor.

Zones *B* and *C* shall be subjected to a liquid penetrant testing. The RS surveyor may require tests of zones *B* and *C* to be made in their presence.

If repairs have been made either by grinding, straightening or by welding the repaired areas shall additionally be subjected to the liquid penetrant testing independent of their location and/or severity zone.

4.2.7.3.1.2 Examination criteria for liquid penetrant testing.

4.2.7.3.1.2.1 Definitions.

Indication is the presence of detectable bleed-out of the penetrant from the material discontinuities appearing at least 10 min after the developer has been applied.

Relevant indication is an indication which has any dimension greater than 1,5 mm when categorization of indications is performed.

Non-linear indication is an indication with a largest dimension less than three times its smallest dimension (i.e. $l < 3w$).

Linear indication is an indication with a largest dimension three or more times its smallest dimension (i.e. $l \geq 3w$).

Aligned indication (refer to Fig. 4.2.7.3.1.2.1) is considered to be a unique indication and its length is equal to the overall length of the alignment. The aligned indication may have the following structure:

three or more non-linear indications aligned with the distance between indications less than 2 mm; or

linear indications aligned with the distance between two indications smaller than the length of the longest indication.

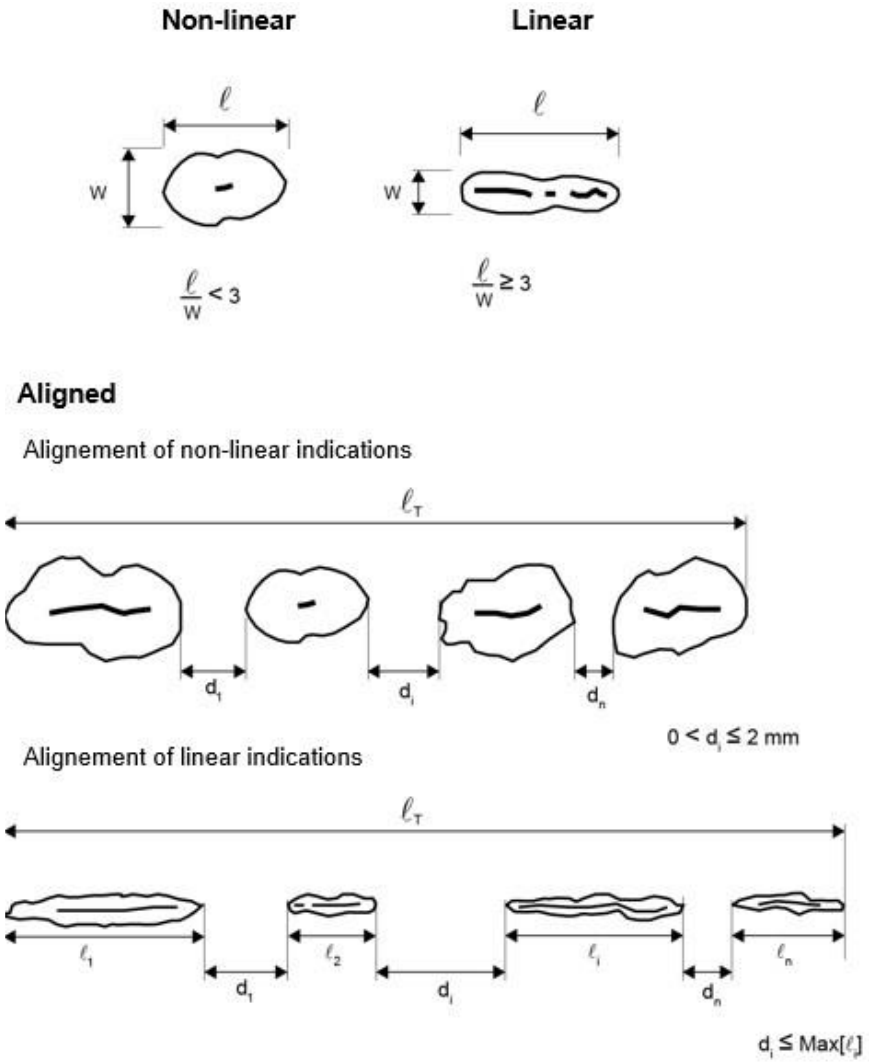

Fig. 4.2.7.3.1.2.1

4.2.7.3.1.2.2 Acceptance criteria.

The entire surface to be inspected shall be divided into reference area of 100 m^2. Each reference area may be square or rectangular with the major dimension not exceeding 250 mm.

The area shall be taken in the most unfavourable locations relative to the indication being evaluated i.e. the shape and dimensions of each reference area are chosen so that they cover the maximum number of defects without their distribution to an adjacent reference area.

The indications detected in each of such areas are, with respect to their size and number, shall not exceed the values given in Table 4.2.7.3.1.2.2.

Table 4.2.7.3.1.2.2

Allowable number and size of relevant indications in a reference area of 100 cm², depending on the severity zones

Severity zones	Max. total number of indications, max	Type of indication	Max. number of each type of indications, max	Dimensions *a* or *l*, mm
A	7	non-linear	5	4
		linear	2	3
		aligned	2	3
B	14	non-linear	10	6
		linear	4	6
		aligned	4	6
C	20	non-linear	14	8
		linear	6	6
		aligned	6	6

Notes: 1. Singular non-linear indications less than 2 mm for zone *A* and less than 3 mm for the other zones are not considered relevant.
2. The total number of circular indications may be increased to the maximum total number represented by the absence of linear/aligned indications. The total number of circular indications may also be increased due to the absence of part of linear and/or aligned indications retaining the total number of allowable indications.

Areas, which are prepared for welding, shall, independent of their location, always be assessed according to zone *A*. The same applies to the welded areas after being finished machined and/or grinded.

4.2.7.3.2 Radiographic and ultrasonic testing.

When required by the Register or when deemed necessary by the manufacturer, further non-destructive testing (e.g. radiographic and/or ultrasonic testing) shall be carried out. In these cases, the acceptance criteria shall be agreed as part of the documentation of the manufacturer and comply with the RS-agreed standards.

Ultrasonic testing is not practical in some cases, depending on the shape, type, thickness, and grain growth direction of the casting negatively impacting absorption of ultrasound.

When the ultrasonic testing is applied, effective ultrasound penetration into the casting shall be practically demonstrated to the Register. As a rule, this is determined by way of back-wall reflection, and/or target features within the casting.

4.2.8 Repair of defects.

4.2.8.1 Discontinuities of the surface causing indications when penetrant testing is carried out and not meeting the requirements of Table 4.2.7.3.1.2.2, such as cracks, shrinkage cavities, sand, slag and other non-metallic inclusions, blow holes, etc., which may impair the safe service of the propeller, shall be eliminated and/or welded.

Dimensions, number and location of defects allowable without repairs, as well as of those subject to repair shall be specified in the product documentation submitted to the Register for approval.

In general, the repairs shall be carried out by mechanical means, e.g. by grinding, chipping or milling. Welding may be applied if the requirements stated here are complied with. Welding may be applied subject to the agreement of with Register in accordance with 4.2.8.3 and 4.2.8.4.

After milling or chipping grinding shall be applied for such defects, which shall not be welded. Grinding shall be carried out in such a manner that the contour of the ground depression is as smooth as possible in order to avoid stress concentrations or to minimize cavitation corrosion. Complete elimination of the defective material shall be verified by liquid penetrant testing.

The manufacturer shall maintain records of inspections, welding, and any subsequent heat treatment, traceable to each casting.

Before welding is started, full details of the extent and location of the repair, the proposed welding procedure, heat treatment and subsequent inspection procedures shall be submitted to the Register for approval.

Welding of areas less than 5 cm^2 shall be avoided.

4.2.8.2 Repair of defects in zone *A*.

In zone *A*, repair welding is not allowed.

Grinding shall be carried out to an extent, which maintains the blade thickness of the drawing approved by the Register.

4.2.8.3 Repair of defects in zone *B*.

Defects that are not deeper than $dB=t/40$ mm (t=minimum local thickness, in mm, according to the Rules) or 2 mm (whichever is greater) shall be removed by grinding. Those defects, which are deeper than allowable for removal by grinding, may be repaired by welding.

4.2.8.4 Repair of defects in zone *C*.

In zone *C*, repair welds are generally permitted.

4.2.8.5 Repair welding.

4.2.8.5.1 General.

The welding procedure and welding consumables used in repair welding shall be recognized by the Register as required by Part XIV "Welding".

Before welding is started, manufacturer shall submit to the Register a detailed welding procedure specification covering the weld preparation, welding parameters, filler metals, preheating and post weld heat treatment and inspection procedures.

Defects shall be repaired in accordance with the approved welding procedure by welders who are qualified to a recognized standard. Welding Procedure Qualification Tests shall be carried out under technical supervision of the RS surveyor and shall meet the requirements of 4.2.8.5.

The welding grooves shall be prepared in such a manner which will allow a good fusion of the groove bottom.

For the welding procedure approval, the welding procedure qualification tests shall be carried out with satisfactory results. The qualification tests shall be carried out with the same welding process, filler metal, preheating and stress-relieving treatment as those intended applied by the actual repair work. Welding procedure specification (WPS) shall refer to (or contain) the test results achieved during welding procedure qualification testing. Documents referenced in the welding procedure specification shall be submitted to the RS surveyor upon request.

Welding procedure approved by the Register for the specified manufacturer may be applied for all workshops having the same repair procedure and quality management system.

The approval of the welding procedure shall be based on welding of samples consisting of cast samples and with sizes sufficient to ensure a reasonable heat distribution. Minimum sample sizes shall comply with those specified for Fig. 4.2.8.5.1.

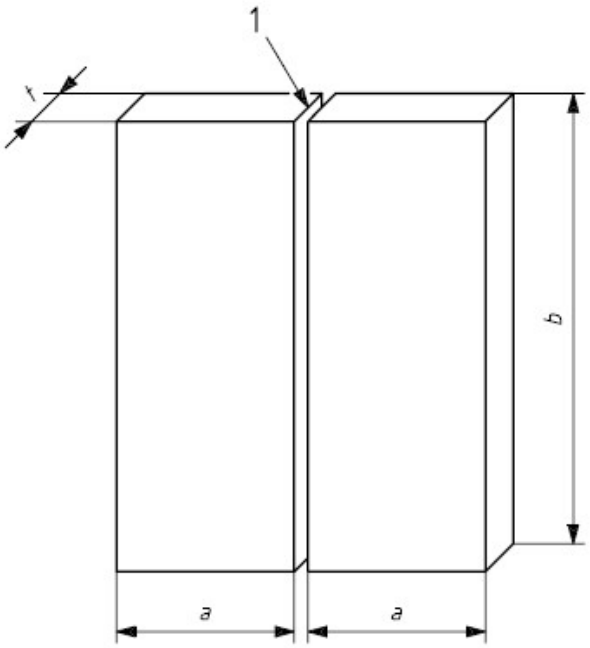

Fig. 4.2.8.5.1
1 — Joint preparation and fit-up as detailed in the preliminary welding procedure specification;
a — minimum width of the sample 150 mm;
b — minimum length of the sample 300mm;
t — minimum thickness of the sample 30 mm.

Preparation and welding of test pieces shall be carried out in accordance with the applied procedures of the firm that shall be submitted to the RS surveyor upon request.

Welding of the test assemblies and testing of test specimens shall be carried out under technical supervision of the RS surveyor.

Two transverse round tensile test specimens shall be taken from samples as shown in Fig. 2.2.2.3, *b* and three macro-etch specimens shall be prepared. As an alternative, tensile test specimens may be prepared in compliance with the methods approved by the Register or the agreed standards.

Welding specification to be submitted to the Register for approval shall be made taking into account the following requirements and recommendations:

defects shall be repaired by mechanical means in accordance with 4.2.8.1 — 4.2.8.4, using penetrant testing for determination of the complete removal of the defects. The examination shall be carried out in the presence of the RS surveyor;

selection of welding consumables, selection of preheat temperature and heat treatment temperature for stress relief shall be made in compliance with the requirements of Table 4.2.8.5.1-1. It shall be noted that with the exception of alloy CU3 all weld repairs shall be stress relief heat treated, in order to avoid stress corrosion cracking;

Table 4.2.8.5.1-1

Recommended fillet metals and heat treatments

Alloy type	Filler metal	Preheat temperature, °C, min	Interpass temperature, °C, max	Stress relief temperature, °C	Hot straightening temperature, °C
CU1	Al-bronze[1]	150	300	350 — 550	500 — 800
	Mn-bronze				
CU2	Al-bronze	150	300	350 — 550	500 — 800
	Ni-Mn-bronze				
CU3	Al-bronze	50	250	450 — 500	700 — 900
	Ni-Al-bronze[2]				
	Mn-Al-bronze				
CU4	Mn-Al-bronze	100	300	450 — 600	700 — 850

[1] Ni-Al-bronze and Mn-Al-bronze are acceptable.
[2] Stress relieving is not required.

where stress relief heat treatment of alloy CU3 propeller castings is required after major repairs in zone *B* and/or zone *A* or if a welding consumable susceptible to stress corrosion cracking is used, the propeller shall be either stress relief heat treated in the temperature 450 to 500 °C or annealed in the temperature range 650 to 800 °C, depending on the extent of repair (refer to Table 4.2.8.5.1-1);

the defects shall be repaired as far as possible in the down-hand position, using arc welding with coated electrodes or "wire — shielded gas" combination.

Metal arc welding shall be used for all types of welding repair on cast copper alloy propellers.

Where the down-hand position is impossible for repairs, only "wire — shielded gas" combination shall be used;

N o t e . Use of argon-shielded tungsten welding is not recommended due to the higher specific heat input of this process.

the time of conditioning for stress relief heat treatment of copper alloy propellers is determined in accordance with Table 4.2.8.5.1-2. The cooling rate shall not exceed 50 °C/h until the temperature of 200 °C is reached.

Table 4.2.8.5.1-2

Time of conditioning for stress relief heat treatment of copper alloy propellers

Stress relief temperature, °C	CU1 and CU2		CU3 and CU4	
	hours per 25 mm thickness	max. recommended total time, hours	hours per 25 mm thickness	max. recommended total time, hours
350	5	15	–	–
400	1	5	–	–
450	0,5	2	5	15
500	0,25	1	1	5
550	0,25	0,5	0,5[1]	2[1]
600	–	–	0,25[1]	1[1]
[1] 550 and 600 °C only applicable to CU4 alloys.				

4.2.8.5.2 Testing.

4.2.8.5.2.1 Test assembly shall be examined non-destructively in accordance with the requirements of Table 4.2.8.5.2.1. The location pattern on specimens is shown in Fig. 4.2.8.5.2.1.

Table 4.2.8.5.2.1

Type of tests and extent of testing

Type of test[1]	**Extent of testing**
Visual testing	100 % as per 4.2.8.5.2.2
Liquid penetrant testing	100% as per 4.2.8.5.2.2
Transverse tensile test	Two specimens as per 4.2.8.5.2.3
Macro examination	Three specimens as per 4.2.8.5.2.4
[1] Bend or fracture test shall be agreed with the Register.	

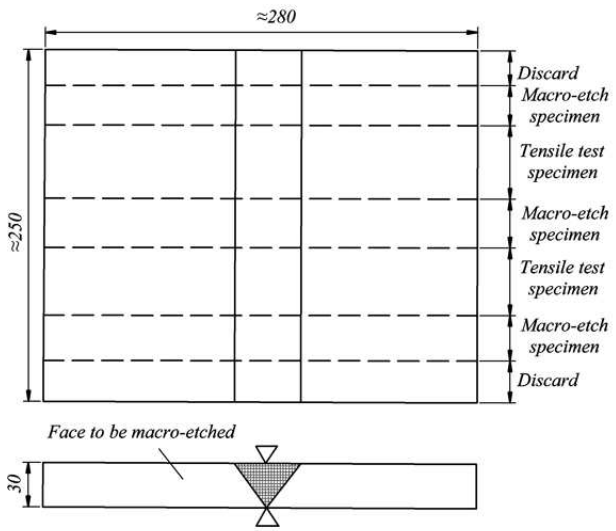

Fig. 4.2.8.5.2.1
Location of specimens

4.2.8.5.2.2 Examination and non-destructive testing of specimens

Test assembly shall be examined by complete visual and liquid penetrant testing after welding and prior to the cutting of test specimen. In case, that any post-weld heat treatment is

required or specified, visual examination and liquid penetrant testing shall be performed after heat treatment.

No cracks are permitted. Procedure for detection of imperfections and control criteria by liquid penetrant testing are specified in 4.2.7.3.1.

4.2.8.5.2.3 Tensile testing.

Two tensile tests shall be prepared in accordance with 2.2.2.8 for butt weld. Alternative specimens may be applied if it is agreed with the Register. These specimens shall comply with the agreed standards. The requirements for the values of tensile strength are given in Table 4.2.8.5.2.3-1.

Table 4.2.8.5.2.3-1

Required tensile strength values for copper-base alloys welded joints

Alloy type	Tensile Strength, MPa
CU1	370
CU2	410
CU3	500
CU4	550

4.2.8.5.2.4 Macroscopic examination.

Macroscopic examination shall be carried out on three test specimens prepared and etched on one side to clearly reveal the weld metal, the fusion line and the heat affected zone.

A suitable etchant for this purpose is:

5 g iron (III) chloride

30 ml hydrochloric acid (cone)

100 ml water.

The test specimens shall be examined for imperfections present in the weld metal and the heat affected zone. Cracks and lack of fusion are not permitted. Pores and slag inclusions, greater than 3 mm are not permitted as well.

4.2.8.5.2.5 Re-testing.

In case of unsatisfactory results of one of the tests, the repeated tests shall be conducted in accordance with 6.5, Part III "Technical Supervision during Manufacture of Materials" of the Rules for Technical Supervision during Construction of Ships and Manufacture of Materials and Products for Ships.

4.2.8.5.2.6 Test record.

4.2.8.5.2.6.1 Welding conditions for test assemblies and test and examination results shall be recorded in welding procedure qualification records. Welding Procedure Approval Test Certificate (form 7.1.33, pages 3 — 9) or other specification regulated by the relevant standards may be used as a record form.

4.2.8.5.2.6.2 A statement of the results of assessing each test piece, including repeat tests, shall be made for each welding procedure qualification records. The relevant items listed for the WPS shall be included in the test report.

4.2.8.5.2.6.3 The welding procedure qualification records shall be signed and stamped by the RS surveyor attending the tests.

4.2.8.5.3 Range of approval.

4.2.8.5.3.1 General.

Requirements specified in 4.2.8.5.3 shall be met independently of each other.

Changes outside of the ranges specified shall require a new welding procedure test.

Welding procedure approved by the Register for a specified manufacturer may be applied for all workshops or sites under the same repair procedure and quality management system.

4.2.8.5.3.2 Base metal.

Results of qualification tests of welding procedure shall cover types of alloys in accordance with Table 4.2.8.5.3.2.

Table 4.2.8.5.3.2

Range of qualification for base metal

Copper alloy material grade used for qualification	Range of approval
CU1	CU1
CU2	CU1, CU2
CU3	CU3
CU4	CU4

4.2.8.5.3.3 Parameters of welding procedure.

The approval of WPS carried out on a weld assembly of thickness *t* equal or less than 30 mm applies to material thickness of equal or more than 3 mm.

Approval for a test made in any position is restricted to that position.

The approval is only valid for the welding used in the welding procedure test. Single run test results are not valid for multi-run butt weld test applied in accordance with this Chapter.

The approval is only valid for the filler metal used in the welding procedure test.

The upper limit of heat input approved is 25 % greater than that used in welding the test piece. At that, the lower limit of heat input approved is 25 % lower than that used in welding the test piece.

The approved minimum preheating temperature shall not be less than that obtained when taking the test piece.

The approved maximum interpass temperature shall not be higher than that obtained in welding the test piece.

The heat treatment used in the qualification test shall be specified in WPS. Holding time at a specified temperature may be adjusted as a function of thickness.

4.2.8.6 Straightening.

For hot and cold straightening, static loading only shall be used.

Straightening of a bent propeller blade or pitch modification shall be carried out after heating the bent region and approximately 500 mm wide zones on either side of it. The temperature range shall comply with the requirements of Table 4.2.8.5.1-1; the heating shall be slow and uniform.

The concentrated flame such as oxy-acetylene and oxy-propane shall not be used.

Weld repaired areas of propeller may be subject to hot straightening, provided it can be demonstrated that weld properties are not impaired by the hot straightening operations.

Cold straightening shall be used for minor repairs of tips and edges only. Cold straightening on CU1 and CU2 as well as CU4 bronze shall be always followed by a stress relieving heat treatment in accordance with Table 4.2.8.5.1-1.

4.2.9 Identification and marking.

4.2.9.1 Identification.

The manufacturer's shall employ a monitoring system, which enables all castings to be traced back to their heat. The confirmation of the availability of such system at manufacturer's shall be given during the manufacturer's survey. System data shall be provided upon request of the RS surveyor.

4.2.9.2 Marking.

Marking of propellers shall be made in compliance with the requirements of 1.4. Besides, marking shall contain the following data:

type/grade of cast material or corresponding abbreviated designation;

manufacturer's mark;

heat number, casting number or another mark enabling the manufacturing process to be traced back;

date of final inspection;

number of the Register Certificate;

skew angle for high-skew propellers;
ice class symbol, where applicable.

4.2.9.3 The Manufacturer's Certificate for each propeller and its components casting to be submitted to the RS surveyor shall contain the following details:

purchaser and order number;
shipbuilding project number, if known;
description of the casting with drawing number;
diameter, number of blades, pitch, direction of turning;
grade of alloy and chemical composition of each heat;
heat and casting number;
final weight;
results of non-destructive tests, if used;
portion of alpha phase for CU1 and CU2 alloys;
results of the mechanical tests;
casting identification number;
skew angle for high-skew propellers.

5 ALUMINIUM ALLOYS

5.1 WROUGHT ALUMINIUM ALLOYS

5.1.1 General.

The present requirements apply to semi-finished products of wrought aluminium alloys (plates, sections, panels etc.) of 3 to 50 mm in thickness intended for ship hulls, superstructures and other marine constructions. Generally, the requirements for aluminium alloys designed for the structures, cargo storage systems of the gas carriers and/or operating at low cryogenic temperatures are given in 10.2.3.

Designation of aluminium alloys is based on the designations of the Aluminium Association. Designation of national alloys approved by the Register is given in accordance with the Russian standards.

The use of wrought aluminium alloys that do not comply with the present requirements in terms of chemical composition, mechanical properties or the condition of delivery may be allowed in case the data on alloy properties, corrosion resistance welding technology features, as well as the alloys' behavior in the working conditions, are provided. Normative technical documentation and/or respective standards shall be submitted to the Register for approval.

All aluminium alloys shall be manufactured under the technical supervision of the Register at the firms recognised by the Register in accordance with 1.3.1.2. The scheme of wrought aluminium alloy manufacturer scheme recognition is given in 2.2, Part III "Technical supervision during manufacture of materials" of the Rules for Technical Supervision during Construction of Ships and Manufacture of Materials and Products for Ships". The material complying with the Register requirements shall be supplied with the Register certificates and marks.

Manufacturers' Certificates for ingots, slabs and billets with the indication of the manufacturer's name, alloy grade, number of cast and chemical composition shall be available to the surveyor performing survey at the enterprise with no melting facilities. Information about the system, which is capable of ingot, slab and billet identification, shall be provided.

The enterprise, which performs aluminium alloys melting, shall be approved by the Register.

The requirements of this Part apply to the following aluminium alloys:

.1 rolled products (plates, strips and sheets): 5083, 5086, 5383, 5059, 5754, 5456;
temper conditions: O/H111/H112/H116/H321;
national alloys: 1530, 1550, 1561, 1561H, 1565ч, 1575, 1581;
temper conditions: O/H111/H112, H321;

.2 pressed sections (full sections, hollow sections, panels, angles and bars etc.): 5083, 5383, 5059, 5086;
temper conditions: O, H111, H112 и 6005A, 6061, 6082;
temper conditions: T5, T6;
national alloys: 1530, 1550, 1561, 1561H, 1565ч, 1575, 1581;
temper conditions: O/H111/H112.

Alloys 6005A, 6061 and 6000 series shall not be used in direct contact with sea water unless protected by anodes and/or coating system.

5.1.2 Chemical composition.

The chemical composition of wrought aluminium alloys determined for each cast shall meet the requirements of Table 5.1.2.

Samples for testing of chemical composition shall be blanked directly from the semi-finished products (plates, panels, etc.).

5.1.3 Mechanical properties.

Mechanical properties of wrought aluminium alloys shall meet the requirements of Tables 5.1.3-1 and 5.1.3-2.

Table 5.1.2

Chemical composition

Grade	Al, %	Si, %	Fe, %	Cu, %	Mn, %	Mg, %	Cr, %	Zn, %	Ti, %	Other elements, %		Note
										Each	Total[1]	
5083	Base	≤0,40	≤0,40	≤0,10	0,4 —1,0	4,0 — 4,9	0,05 — 0,25	≤0,25	≤0,15	≤0,05	≤0,15	–
5383	Base	≤0,25	≤0,25	≤0,20	0,7 — 1,0	4,0 — 5,2	≤0,25	≤0,40	≤0,15	≤0,05[2]	≤0,15[2]	–
5059	Base	≤0,45	≤0,50	≤0,25	0,6 — 1,2	5,0 — 6,0	≤0,25	0,4 — 0,9	≤0,20	≤0,05[3]	≤0,15[3]	–
5086	Base	≤0,40	≤0,50	≤0,10	0,20 — 0,7	3,5 — 4,5	0,05 — 0,25	≤0,25	≤0,15	≤0,05	≤0,15	–
5754	Base	≤0,40	≤0,40	≤0,10	≤0,50[4]	2,6 — 3,6	≤0,30	≤0,20	≤0,15	≤0,05	≤0,15	0,10 ≤ Mn + Cr ≤ 0,60
5456	Base	≤0,25	≤0,40	≤0,10	0,50 —1,0	4,7 — 5,5	0,05 — 0,20	≤0,25	≤0,20	≤0,05	≤0,15	–
6005 A	Base	0,50—0,90	≤0,35	≤0,30	≤0,50[5]	0,4 — 0,7	≤0,30[5]	≤0,20	≤0,10	≤0,05	≤0,15	0,12 ≤ Mn + Cr ≤ 0,50
6061	Base	0,40 — 0,80	≤0,7	0,15 — 0,40	≤0,15	0,8 — 1,2	0,04 — 0,35	≤0,25	≤0,15	≤0,05	≤0,15	–
6082	Base	0,70 — 1,30	≤0,50	≤0,10	0,4 — 1,0	0,6 — 1,2	≤0,25	≤0,20	≤0,10	≤0,05	≤0,15	–
National alloys												
1530	Base	0,50 — 0,80	≤0,50	≤0,10	0,30 — 0,60	3,2 — 3,8	≤0,05	≤0,20	≤0,10	≤0,05	≤0,15	–
1550	Base	≤0,50	≤0,50	≤0,10	0,30 — 0,80	4,8 — 5,8	–	≤0,20	≤0,10	≤0,05	≤0,15	–
1561	Base	≤0,40	≤0,40	≤0,10	0,70 — 1,10	5,5 — 6,5	–	≤0,20	–	≤0,05	≤0,15	Zr(0,02 — 0,12)
1561 H	Base	≤0,40	≤0,40	≤0,10	0,5 — 0,8	5,5 — 6,5	–	≤0,20	–	≤0,05	≤0,15	Zr(0,10 — 0,17)
1565 ч	Base	≤0,2	≤0,30[6]	0,05 — 0,1	0,4 — 1,2	5,5 — 6,5[7]	0,02 — 0,25	0,45 — 1,0	≤0,10	≤0,05	≤0,15	Zr (0.08 — 0.13) Ni (0.05)
1575	Base	≤0,20	≤0,30	≤0,10	0,35 — 0,6	5,4 — 6,4	0,05 — 0,15	≤0,01	≤0,07	≤0,05	≤0,15	Zr(0,1 0,1)
1581	Base	0,08 — 0,16	0,12 — 0,22	≤ 0,10	0,40 — 0,80	4,30 — 5,30	0,08 — 0,18	≤ 0,25	0,02 — 0,15	≤ 0,05	≤ 0,15	Zr (0,08 — 0,16) Sc (0,01 — 0,09) Ca (≤ 0,10) V (0,01 — 0,06)

[1] Including Ni, Ga, V and other elements not given here.
[2] Zr: maximum 0,20. The total for other elements does not include Zirconium.
[3] Zr: 0,05 — 0,25. The total for other elements does not include Zirconium.
[4] Mn+Cr: 0,10 — 0,60.
[5] Mn+Cr: 0,12 — 0,50.
[6] Fe+Ni:≤ 0,7
[7] Mg+Zn: 5,7 — 7,3

Table 5.1.3-1

Mechanical properties for rolled products

Grade	Temper condition	Thickness t, mm	Yield stress $R_{p0,2}$, N/mm², min.	Tensile strength R_m, N/mm², min.	Elongation, %, min.	
					$A_{50\,mm}$	A_{5d}
5083	O	3 ≤ t ≤ 50	125	275 — 350	16	14
	H111		125	275 — 350	16	14
	H112		125	275	12	10
	H116		215	305	10	10
	H321		215 — 295	305 — 385	12	10
5383	O	3 ≤ t ≤ 50	145	290	–	17
	H111		145	290	–	17
	H116		220	305	10	10
	H321		220	305	10	10
5059	O	3 ≤ t ≤ 50	160	330	24	24
	H111	3 ≤ t ≤ 50	160	330	24	24
	H116	3 ≤ t ≤ 20	270	370	10	10
		20 < t ≤ 50	260	360	–	10
	H321	3 ≤ t ≤ 20	270	370	10	10
		20 < t ≤ 50	260	360	–	10
5086	O	3 ≤ t ≤ 50	95	240 — 305	16	14
	H111		95	240 — 305	16	14
	H112	3 ≤ t ≤ 12,5	125	250	8	–
		12,5 < t ≤ 50	105	240	–	9
	H116	3 ≤ t ≤ 50	195	275	10[1)]	9
5754	O	3 ≤ t ≤ 50	80	190 — 240	18	17
	H111		80	190 240	18	17
5456	O	3 ≤ t ≤ 6,3	130 — 205	290 — 365	16	
		6,3 < t ≤ 50	125 — 205	285 —360	16	14

Grade	Temper condition	Thickness t, mm	Yield stress $R_{p0,2}$, N/mm^2, min.	Tensile strength R_m, N/mm^2, min.	Elongation, %, min.	
					$A_{50\,mm}$	A_{5d}
	H116	$3 \le t \le 30$	230	315	10	10
		$30 < t \le 40$	215	305	–	10
		$40 < t \le 50$	200	285	–	10
	H321	$3 \le t \le 12,5$	230 — 315	315 — 405	12	–
		$12,5 < t \le 40$	215 — 305	305 — 385	–	10
		$40 < t \le 50$	200 295	285 370	–	10
National alloys						
1530	O/H112	$3 \le t \le 12,5$	80	185	15	–
		$12,5 < t \le 50$	60	165	–	11
1550	O/H112	$3 \le t \le 12,5$	125	275	15	–
		$12,5 < t \le 50$	110	255	–	12
1561	O/H112	$3 \le t \le 12,5$	175	335	12	–
		$12,5 < t \le 50$	175	335	–	10
1561H	H32/H321	$3 \le t \le 12,5$	245	355	10	–
		$12,5 < t \le 50$	225	335	–	12
1565ч	O/H112	$2 \le t \le 4$	145	330		18
		5	170	330		15
		$5,5 < t \le 10,5$	175	335		15
		$11,0 < t \le 40,0$	175	335		15
		$40 < t \le 60$	175	330		15
		$60 < t \le 80$	170	310		12
1575	O/H112		295	400	11	–
1581	O/H112	$1,5 \le t \le 6,0$	205	345	–	15
		$6 < t \le 10,5$	200	350		15
		$10,5 < t \le 50,0$	190	350		14

[1] 8 % for thicknesses up to and including 6,3 mm.

N o t e s : 1. The values in the Table are applicable for longitudinal and transverse specimens as well.

2. The mechanical properties for the O and H111 tempers are the same. However, they are separated to discourage dual certification as these tempers represent different processing.

Table 5.1.3-2

Mechanical properties for extruded products

Grade	Temper condition	Thickness t, mm	Yield stress $R_{p0,2}$, N/mm^2, min.	Tensile strength R_m, N/mm^2, min.	Elongation, % min.	
					A_{50} mm	A_{5d}
5083	O	$3 \le t \le 50$	110	270 — 350	14	12
	H111		165	275	12	10
	H112		110	270	12	10
5383	O	$3 \le t \le 50$	145	290	17	17
	H111		145	290	17	17
	H112		190	310		13
5059	H112	$3 \le t \le 50$	200	330		10
5086	O	$3 \le t \le 50$	95	240 — 315	14	12
	H111		145	250	12	10
	H112		95	240	12	10
6005A	T5	$3 \le t \le 50$	215	260	9	8
	T6	$3 \le t \le 10$	215	260	8	6
		$10 \le t \le 50$	200	250	8	6
6061	T6	$3 \le t \le 50$	240	260	10	8
6082	T5	$3 \le t \le 50$	230	270	8	6
	T6	$3 \le t \le 5$	250	290	6	
		$5 \le t \le 50$	260	310	10	8
National alloys[1]						
1530	O/H111/H112	$3 \le t \le 12,5$	80	175	12	–
		$12,5 \le t \le 50$			–	12
1550	O/H111/H112	$3 \le t \le 12,5$	125	255	13	–
		$12,5 \le t \le 50$			–	13
1561[2]	O/H111/H112	$3 \le t \le 12,5$	205	335	11	–
		$12,5 \le t \le 50$			–	11

Grade	Temper condition	Thickness t, mm	Yield stress $R_{p0,2}$, N/mm^2, min.	Tensile strength R_m, N/mm^2, min.	Elongation, % min.	
					A_{50} mm	A_{5d}
1565ч	O/H112	$3 \le t \le 12,5$	185	335		12
		$5,5 \le t \le 50$	185	335		12
1575	O/H111/H112	$3 \le t \le 12,5$	295	400	11	–
		$12,5 \le t \le 50$			–	11
1581	O/H112	All thicknesses	215	355	–	12

[1] The mechanical properties specified for national alloys also cover hollow sections made of these alloys if their cross section does not exceed 60 mm^2 or the diameter of a circumscribed circle is equal or less than 250 mm.
[2] Reduction of the yield stress rated value for pipes to 167 MPa is permitted provided the value is stipulated in the agreed normative documents.

N o t e . The values in the Table are applicable for both longitudinal and transverse specimens.

5.1.4 Condition of supply.

Condition of supply shall be specified in accordance with EN515. National aluminium wrought alloys shall be delivered with indication of condition of supply in accordance both with EN515 and applicable national standards.

The parameters of thermal and thermomechanical treatment providing alloys properties are determined by semi-finished products manufacturer.

Condition of supply is specified in the Manufacturer's Certificate for semi-finished product.

5.1.5 Sampling.

Samples for mechanical properties determining shall be taken so that the longitudinal axis of the test specimen is oriented as follows:

for rolled products, as a rule, — across the direction of rolling. If the width of rolled products is insufficient for cutting off of specimens or if there are special national standards — the production of longitudinal samples is allowed;

for pressed sections (full sections, hollow sections, bars etc.) — along the main axis of the semifinished product;

for pressed sections for welding of hollow sections — perpendicular to the section axis.

The samples shall be taken at one third of the width from a longitudinal edge of rolled products.

In the range 1/3 to 1/2 of the distance from the edge to the centre of the semi-finished product samples shall be taken at the thickest part of it.

Blanking of specimens as well as production of specimens for tests shall be made by the methods preventing the possible change of alloys properties because of hardening.

Each specimen shall be marked so that after its manufacture and cleaning it is posssible to identify it with the specific semi-finished product and to determine the place where it was blanked and orientation of it.

The requirements for tensile test specimens are set forth in 2.2.2.5, and the general requirements for the tests — in 2.1.

5.1.6 Scope of testing.

Semi-finished products of wrought aluminium alloys are submitted for testing in batches.

A batch shall consist of semi-finished products of the same grade (the same cast), of the same form and dimensions (for plates — of the same thickness), of the same temper condition and manufactured by the same technological process.

5.1.6.1 Rolled products.

One tensile test specimen is taken from each 2000 kg. If the weight of the batch exceeds 2000 kg, one extra tensile testing shall be carried out for each 2000 kg (full or not).

For plates, strips or coils weighting more than 2000 kg each, only one tensile test specimen shall be taken.

5.1.6.2 Pressed sections (full sections, hollow sections, bars etc.).

One tensile test specimen shall be taken from each batch:
of 1000 kg — for products weighting less than 1 kg;
of 2000 kg — for products weighting from 1 to 5 kg;
of 3000 kg — for products weighting more than 5 kg.

If the weight of semi-finished products batch exceeds the specified figures, an additional testing shall be carried out for each batch (full or not).

If the test results are unsatisfactory, the testing shall be repeated in accordance with the requirements of 1.3.5.2.

5.1.7 Quality testing of welded joints of hollow sections made by welding.

The manufacturer shall carry out macrosection tests and drift expansion tests confirming that there is no lacks of fusion in each batch of closed sections.

Sections for testing shall be submitted in batches consisting of no more than five semi-finished products. One section from each batch is submitted to testing. If the lengths of sections exceed 6 m every semi-finished product shall be tested.

The length of specimens shall comply with 2.2.

The test samples from each semi-finished product submitted to testing shall be cut from the each end perpendicular to the axis of the section. In any case the length of the specimen shall not be less than 50 mm.

Drift expansion testing shall be carried out at ambient temperature by means of a hardened steel conical mandrel (of at least 60°).

Testing is considered unsatisfactory if the specimen fails with a clean split along the weld line, which confirms lack of fusion.

5.1.8 Corrosion testing.

Rolled alloys of type 5083, 5383, 5059, 5086 and 5456 in H116 and H321 tempers intended for use in marine hull construction or in marine applications where frequent direct contact with seawater is expected shall be corrosion tested in the above medium with respect to exfoliation and intergranular corrosion resistance.

During the initial works survey for the purpose of its recognition, the manufacturer shall provide data concerning the relationship between microstructure and resistance to corrosion.

Reference photomicrographs taken at 500X (according to provisions in ASTM B928, Section 9.4.1), shall be established for each of the alloy-tempers and thickness ranges relevant. The reference photographs shall be taken from samples, which have exhibited no evidence of exfoliation corrosion and a pitting rating of PB or better, when subjected to the test described in ASTM G66 (ASSET). The samples shall also have exhibited resistance to intergranular corrosion at a mass loss no greater than 15 mg/cm^2, when subjected to the test described in ASTM G67 (NAMLT). The tests for exfoliation corrosion and intergranular corrosion may be conducted in accordance with other RS-agreed national standards.

The documentation (reports) relating to the test results and the established relationship between microstructure and resistance to corrosion submitted by the manufacturer shall be approved by the Register. Any changes in production practices of the material shall require respective examinations to be carried out and documentation exhibiting evidence of alloy corrosion resistance to be reapproved.

For rolled alloys of type 5083, 5383, 5059 and 5086 in the H116 and H321 tempers, comparative metallographic examination of one sample selected from mid width at one end of a batch coil (semifinished product) shall be carried out.

A longitudinal section perpendicular to the rolled surface shall be prepared for comparative metallographic examination according to provisions in ASTM B928, Section 9.6.1. If the microstructure shows evidence of continuous grain boundary network of aluminium-magnesium precipitate in excess of the metal tested at the initial approval, the batch shall either be rejected or tested for exfoliation-corrosion resistance and intergranular corrosion resistance. The methods and assessment criteria of corrosion resistance test results shall be in accordance with ASTM G66 and G67 or the RS-agreed standards. Acceptance criteria are that the sample shall

exhibit no evidence of exfoliation corrosion and a pitting rating of PB or better when test subjected to ASTM G66 ASSET test, and the sample shall exhibit resistance to intergranual corrosion at a mass loss no greater than 15 mg/cm^2 when subjected to ASTM G67 NAMLT test.

If the results from testing satisfy the above criteria, the batch is accepted.

As an alternative to metallographic testing, each batch may be tested for exfoliation-corrosion resistance and intergranular corrosion resistance, in accordance with ASTM G66 and G67 under the conditions specified in ASTM B928, or the equivalent RS-agreed standards. If this alternative is used, then the results of the test shall satisfy the acceptance criteria stated in 5.1.8.

5.1.9 Inspection.

Semi-finished products of wrought aluminium alloys prepared for delivery shall have no internal and external defects negatively affecting their direct use.

All semi-finished products are liable to visual testing.

The application of non-destructive testing is not required if not specially indicated. Still it is supposed that manufacturers use the required non-destructive testing during manufacturing of wrought aluminium alloys in order to maintain products quality at the appropriate level.

It is allowed to rectify the detected surface defects by grinding or flogging provided this correction does not change the size of semi-finished products out of the allowed tolerances.

Ultimate negative thickness tolerances for rolled aluminium alloys are given in Table 5.1.9. Rolling with tolerances in compliance with agreed national or international standards is allowed.

Ultimate negative thickness tolerances for pressed semi-finished products shall be in compliance with the requirements of agreed international or national standards.

Manufacturer of the material is responsible for dimensions of semi-finished products and the appropriate allowed tolerances.

Table 5.1.9

Ultimate negative thickness tolerances for rolled products

Nominal thickness *t*, mm	Ultimate tolerances in relation to rolled products thickness, *S*, mm		
	$S \le 1500$	$1500 < S \le 2000$	$2000 < S \le 3500$
$3 \le t < 4$	0,10	0,15	0,15
$4 \le t < 8$	0,20	0,20	0,25
$8 \le t < 12$	0,25	0,25	0,25
$12 \le t < 20$	0,35	0,40	0,50
$20 \le t < 50$	0,45	0,50	0,65

5.1.10 Marking.

The main requirements for marking are set out in 1.4.

Each semi-finished product shall be clearly identified by the agreed method and in the agreed place by the marks of the manufacturer and the Register.

Marking shall include as a minimum:

name and/or identification of the manufacturer;

alloy grade and temper conditions in accordance with the requirements of this Chapter;

batch number, semi-finished product number and identification number in accordance with the system adopted by the enterprise to trace back the whole production process.

It is allowed to put marks on labels if semi-finished products are delivered in bundles.

5.1.11 Documents.

5.1.11.1 Each batch or semi-finished product (if products are delivered in pieces) tested in accordance with 5.1.6, shall have the Manufacturer's Certificate and Register Certificate. As a minimum, the Manufacturer's Certificate shall contain the following:

order number;

construction of the ship or floating facility number, when known;

name, number, dimensions and weight of the semi-finished product;

alloy designation (grade) and temper condition;

batch number or semi-finished product number, or identification number, which allows to identify the material delivered.

The results of chemical analysis, mechanical tests and corrosion tests (if any) are the mandatory supplement to the Manufacturer's Certificate. The results of those tests shall confirm the material compliance with the Register requirements.

5.2 CAST ALUMINIUM ALLOYS

5.2.1 General.

The requirements of this Chapter apply to parts and structures of cast aluminium alloy used in hull and ship machinery structures and manufactured under survey by the Register. Semi-finished products of cast aluminium alloys shall be manufactured at works recognized according to 1.3.1.2.

5.2.2 Chemical composition and mechanical properties.

The chemical composition and mechanical properties of items cast of aluminium alloys shall meet the requirements of Table 5.2.2.

When chill or pressure casting is employed, mechanical characteristics values may exceed the specified ones.

The use of alloys with chemical composition and mechanical properties differing from those indicated in Table 5.2.2 may be allowed in accordance with national and international standards recognized by the Register.

The new alloys with modified chemical composition not complying with the present requirements may be allowed in case the data on their properties, including corrosion resistance and application in the working conditions, are provided.

Table 5.2.2

Chemical composition and mechanical properties of cast aluminium alloys

Grade	Chemical composition, %		Condition of supply	Mechanical properties, min			
	Basic elements	Allowable residual elements (max)		$R_{p0,2}$, MPa	R_m, MPa	A_5, %	*HB*
1	Mg — 2,0...4,5 Si — 0,05...1,3 Mn — 0,05...0,6 Al remainder	Cu — 0,10 Fe — 0,50 Zn — 0,20 Ti 0,20	Untreated	70	140	3	50
			Solution-treated with slow cooling down	125	210	1	65
2	Mg — 4...6 Si — 0,5...1,3 Mn — 0,05...0,5 Al remainder	Cu — 0,10 Fe — 0,50 Zn — 0,10 Ti 0,20	Untreated	80	150	2	55
3	Mg — 9...11,5 Si — 1,3 (max) Mn — 0,4 (max) Al remainder	Cu — 0,10 Fe — 0,50 Zn — 0,10 Ti 0,15	Solution-treated and hardened	145	270	8	60
4	Si — 7...11 Mg — 0,5 (max) Mn — 0,15...0,5 Al remainder	Cu — 0,10 Fe — 0,60 Zn — 0,30 Ti 0,15	Untreated	90	150	2	50
			Solution-treated with slow cooling down	165	200	1,5	70
5	Si — 10...13,5 Mn — 0,5 (max) Al — remainder	Cu — 0,10 Fe — 0,60 Zn — 0,30 Ti 0,15	Untreated	70	150	2	50
			Solution-treated and hardened	80	160	3	50

5.2.3 Heat treatment.

If castings of aluminium alloys are heat treated the type of heat treatment is chosen by the maker and recorded in the Manufacturer's Certificate for material.

5.2.4 Sampling.

The samples may be cast-on or separately cast. The sample thickness shall not be less than the minimum wall thickness of the casting. Whenever possible, the cooling of the samples will be effected in conditions similar to the cooling of castings.

In the case of castings for parts operating under high loads the thickness of the samples shall not be less than the thickness of the highest loaded zone of the castings and it shall be specified in the drawing.

5.2.5 Scope of testing.

Depending on their application the castings of aluminium alloys shall be divided into test groups and tested accordingly within the scope indicated in Table 5.2.5.

The scope of testing for castings with cast on samples shall be specified in the castings documentation submitted to the Register for approval.

Tensile tests are conducted to determine the yield stress, tensile strength and elongation.

When castings for small-size pistons are checked at the established manufacturing process and in the presence of the data confirming the continuous quality of castings, tensile tests of each batch may be omitted, in which case hardness tests shall be carried out.

Table 5.2.5

Test groups for cast aluminium alloys

Test group	Conditions of application	Examples of application	Tests	Scope of testing	
				Batch size	Number of tests
I	Cast items subjected to loads and exposed to corrosion	Parts of internal combustion engines, pumps, compressors, fans, valves	Determination of chemical composition	Per cast	
			Tensile test	1 cast	2
II	Parts operating at high temperature and exposed to fuel oil, petroleum products, etc.	Pistons of internal combustion engines, compressors	Determination of chemical composition	Per cast	
			Tensile test	Each casting	1
			Hardness test		1

5.2.6 Inspection.

The castings shall be submitted for inspection in the fettled condition with sprues, heads and burrs removed. They shall be free of any defects detrimental to their application and strength.

Surface defects within the dimensional tolerances may be either ignored or removed by machining.

Certain casting defects may be repaired by welding, the procedure of which shall be agreed with the Register.

If the material of the castings is tested for soundness by hydraulic pressure, the casting drawing shall contain information on the working pressure in the tested space and on the test pressure employed at testing.

The test pressure value is selected on the basis of the requirements of the relevant parts of the Rules. Non-destructive testing may be conducted on castings intended for items, which operate under high loads.

5.2.7 Marking and documentation.

Identification, marking and issued documentation — in accordance with the requirements of 3.8.8.

5.3 ALUMINIUM-STEEL LAMINATED COMPOSITE MATERIAL

5.3.1 General requirements.

5.3.1.1 The present requirements apply to semi-finished products (plate, sheet, strip) of aluminium-steel laminated composite material (aluminium-steel semi-finished products) intended for steel and aluminium joints of ship hulls, superstructures and other marine constructions as well as the ship machinery subject to the technical supervision of the Register in accordance with the requirements of other parts of the Rules.

5.3.1.2 Aluminium-steel semi-finished products shall be manufactured in compliance with the documentation approved by the Register at the enterprises recognized by the Register based on the requirements given in 1.3 and under technical supervision of the Register.

The Register representative performing technical supervision at the manufacturer of aluminium-steel semi-finished products with no metallurgical production of all the composite material components shall be provided with the Manufacturer's Certificates for basic materials. Suppliers of basic materials for aluminium-steel semi-finished product manufacture shall be recognized by the Register.

5.3.1.3 The use of aluminium-steel semi-finished products based on wrought aluminium alloys and steel, which do not comply with these requirements in respect of chemical composition, mechanical properties or condition of supply will only be possible after thorough examination of material supply documentation, their actual properties, including corrosion resistance and welding procedure features. The data substantiating possible use of aluminium-steel semi-finished products under operating conditions shall be submitted to the Register.

5.3.1.4 Aluminium-steel semi-finished products may be manufactured by simultaneous hot rolling or explosion welding.

5.3.1.5 Aluminium-steel semi-finished products shall be manufactured not using cold or hot rolling as final operation to obtain the required thickness.

5.3.1.6 Hull structural steel, which complies with the requirements of 3.2, is generally used as the base metal, steel layer of aluminium-steel semi-finished products.

Rolled products (plate, sheet, strip) of alloys in annealed condition which comply with the requirements of 5.1, e.g. 1561 and 5083 alloys, are used as aluminium layer of aluminium-steel semi-finished products.

In general, rolled steel and aluminium for aluminium-steel semi-finished products shall be manufactured by the enterprises recognized in accordance with 1.3 and under technical supervision of the Register.

5.3.1.7 Aluminium or primary commercial aluminium shall be used as the intermediate aluminium layer of aluminium-steel semi-finished products, shall be specified by the manufacturer and indicated in the documentation submitted for approval to the Register.

The nominal thickness of intermediate aluminium layer of aluminium-steel semi-finished products shall not be less than 0,25 mm.

The intermediate aluminium layer used for manufacture of aluminium-steel semi-finished product may be incorporated in the package as a separate layer or serve as a cladding on the basic aluminium layer of wrought aluminium-magnesium alloys.

Rolled products of wrought aluminium-magnesium alloys with single- or double-sided cladding of aluminium or primary commercial aluminium shall be specified by the manufacturer and indicated in the documentation submitted for approval to the Register.

The clad layer thickness on each side of the plate shall be not less than 4 % of the total plate thickness.

5.3.2 Chemical composition and mechanical properties.

5.3.2.1 The chemical composition and mechanical properties of basic materials as well as properties of aluminium-steel semi-finished products shall comply with the documentation approved by the Register. The chemical composition and mechanical properties of base

materials intended for manufacture of aluminium- steel semi-finished product shall comply with the requirements of 3.2 and 5.1.

5.3.2.2 Condition of supply.

5.3.2.2.1 Aluminium-steel semi-finished products obtained by simultaneous hot rolling shall be supplied in annealed condition. Type and conditions of heat treatment shall be specified in the documentation submitted for approval to the Register.

5.3.2.2.2 Aluminium-steel semi-finished products obtained by explosion welding shall be supplied in initial condition.

5.3.2.3 Scope of testing.

5.3.2.3.1 The scope of testing and sampling of basic materials, steel and aluminium-magnesium alloys for aluminium-steel semi-finished products shall be in accordance with the requirements of 3.2 and 5.1, accordingly.

5.3.2.3.2 During the initial survey for recognition of aluminium-steel semi-finished product manufacture by the Register according to 1.3.1, the scope of testing shall be based on the program developed by the manufacturer of aluminium-steel semi-finished product and approved by the Register. The control test program shall be developed to confirm the product quality stability in accordance with the requirements of 2.2, Part III "Technical Supervision during Manufacture of Materials" of the Rules for Technical Supervision during Construction of Ships and Manufacture of Materials and Products for Ships and shall, as a minimum, include the following tests:

pull-off and shear tests to determine adhesion of test specimen layers in composite aluminium-steel material;

bend tests to determine plybond strength of test specimen layers in composite aluminium-steel material;

micro analysis of metal in the layer interface zone of composite aluminium-steel material.

Tests shall be carried out on a control batch. For each process stated (the same basic material supplier, the same size, the same condition of supply), 2 semi-finished products of a batch shall be submitted for testing.

Each semi-finished product of the control batch shall be subject to visual and ultrasonic testing to determine layer discontinuity zone.

Simultaneously with the test program, recommendations for welding aluminium-steel semi-finished products shall be submitted to the Register.

5.3.2.3.3 During manufacture, the scope of testing shall be determined on the basis of the material delivery documentation approved by the Register or the RS-agreed national/international standard. Semi-finished products shall be submitted for testing in batches. A batch shall consist of semifinished products of the same condition of supply, the same size, manufactured by the same process and using basic materials received from the same supplier. In general, not less than 10 % of semi-finished products shall be taken from a batch with a mass of not more than 200 kg.

Where under the contract the delivered mass of aluminium-steel semi-finished products of the same size is considered to be a batch, not less than 20 % of semi-finished products in the batch shall be tested.

From each semi-finished product submitted for testing, samples shall be taken for pull-off and shear tests to determine layer adhesion.

Visual and ultrasonic testing to determine layer discontinuity zones shall be conducted on each semifinished product in the batch.

5.3.2.3.4 Sampling and testing.

5.3.2.3.4.1 During initial survey, the samples shall be taken from each end of semi-finished product. During manufacture, the samples are generally taken from one end of the semi-finished product. The samples shall be taken at a distance not less than 25 mm from the edge of the semi-finished product.

5.3.2.3.4.2 Bend tests to determine plybond strength of test specimen layers in composite aluminium-steel material.

Bend test of bimetallic specimens shall be performed for the qualitative assessment of steel and aluminium layer plybond strength. No layer separation during bending shall be a performance criterion.

Three test specimens shall be taken from a sample for bend test. One bend test shall be carried out with the specimen of the aluminium layer on the tensioned side and another with the specimen of the aluminium layer on the compressed side. The third test specimen shall be subject to transverse bending (with the layers vertically oriented). Unless otherwise specified, the test conditions shall be in accordance with Table 5.3.2.3.4.2. The procedure for test specimens' preparation and test performance shall comply with the manufacturer's documentation approved by the Register, agreed national and/or international standards.

Table 5.3.2.3.4.2

Bend tests of aluminium-steel semi-finished products

Test type	Minimum bend, in deg.	Mandrel diameter
Tensile test of aluminium	90	3*T*
Compression test of aluminium	90	3*T*
Transverse bending	90	6*T*
Note. *T* is the maximum semi-finished product thickness. Tests shall be carried out at room temperature.		

5.3.2.3.4.3 Pull-off and shear tests of aluminium-steel semi-finished product layers.

5.3.2.3.4.3.1 Pull-off and shear tests of aluminium-steel semi-finished product layers obtained by explosion welding.

The tests shall be carried out on one specimen of each type (pull-off and shear tests) taken near the place of explosion and on three specimens taken away from that area, one specimen (pull-off and shear tests) shall be taken from a remote end of the semi-finished product.

Pull-off and shear tests shal be carried out at the room temperature.

5.3.2.3.4.3.2 Pull-off and shear tests of aluminium-steel semi-finished product layers obtained by simultaneous hot rolling.

Pull-off and shear tests shall be carried out on one specimen of each type at the room temperature.

Pull-off tests shall be carried out on specimens as shown in Fig. 5.3.2.3.4.3.2-1.

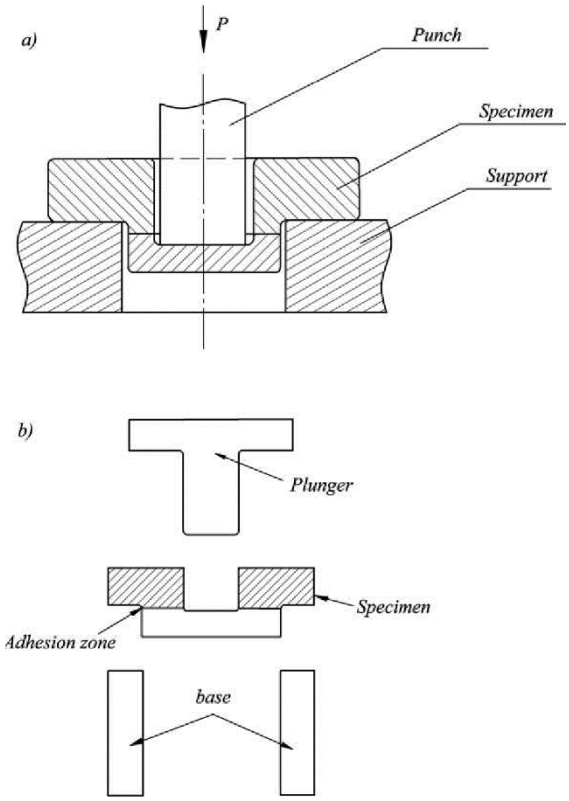

Fig. 5.3.2.3.4.3.2-1
Pull-off test diagrams (*a* or *b*)

Shear tests shall be carried out on specimens as shown in Fig. 5.3.2.3.4.3.2-2.

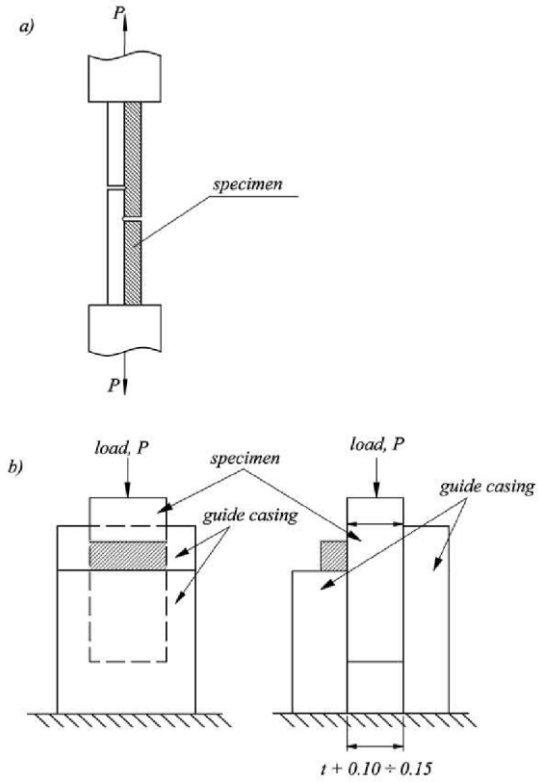

Fig. 5.3.2.3.4.3.2-2
Shear test diagrams (*a* or *b*)

For all the specimens tested, the ultimate pull-off and shear strength shall comply with the documentation approved by the Register.

Where the ultimate pull-off or shear strength of a laminated composite material is below the specified minimum, two additional pull-off and shear test specimens shall be tested.

Each new value shall not be less than the specified minimum value.

Where the ultimate pull-off or shear strength of a laminated composite material is below the specified minimum value but exceeds 70 % of the minimum value, two additional pull-off and shear test specimens taken from each end of the semi-finished product shall be tested.

Each new value shall not be less than the specified minimum value.

5.3.2.3.4.4 Visual and non-destructive testing.

5.3.2.3.4.4.1 Each aluminium-steel semi-finished product shall be subject to 100 % visual testing and ultrasonic testing to determine layer discontinuity zones.

5.3.2.3.4.4.2 The layer adhesion quality shall be determined by ultrasonic testing based on approved assessment criteria.

5.3.2.3.4.4.3 Micro structural analysis of interface between aluminium and steel layers of aluminium-steel semi-finished products.

Manufacturer shall submit the photos of interface surface between the layers of composite material with × (10–20) and ×100 magnification. Micro structural analysis shall be made on the sections cut out of the samples for mechanical tests.

5.3.3 Inspection.

5.3.3.1 All aluminium-steel semi-finished products shall undergo surface inspection. Absence of defects not permitted under delivery documentation approved by the Register shall be guaranteed by the manufacturer, with a relevant entry to be made in the Manufacturer's

Certificate. The surface defects resulting from manufacturing procedure are permitted if their depth is within the negative deviations specified in the documentation.

It is allowed to rectify the detected surface defects by grinding or flogging, provided these corrections do not change the size of the semi-finished product out of the allowed tolerances. For aluminium-steel semi-finished products, repairing of surface defects of steel and aluminium layers is not permitted.

The responsibility for quality of control and maintenance of the required tolerances rests with the manufacturer.

5.3.4 Marking.

5.3.4.1 Marking is carried out in accordance with 5.1.10. The basic requirements for marking are set forth in 1.4.

Every semi-finished product shall have manufacturer's marking and the Register stamp clearly made in the specified manner and in a due place.

The marking shall include, as a minimum:

name and/or designation of the manufacturer;

grades of aluminium alloy and steel;

condition of supply;

number of a batch, semi-finished product or identification number according to manufacturer's system, which allows tracing complete production process.

If the semi-finished products are delivered in bundles, the marking may be made on tags.

5.3.5 Documents.

5.3.5.1 If supply is provided by piece, every batch of semi-finished product, which has undergone testing shall be provided with the Manufacturer's Certificate or Register Certificate.

The Manufacturer's Certificate shall include, as a minimum:

order number;

construction project number, when known;

name, number, dimensions and weight of the semi-finished product;

alloy designation (grade) and temper condition;

batch number or semi-finished product number, or identification number, which allows to identify the material delivered.

The results of chemical analysis, mechanical tests and corrosion tests (if any) are the mandatory supplement to the Manufacturer's Certificate. The results of those tests shall confirm the material compliance with the Register requirements.

5.3.6 Welding of semi-finished products of aluminium-steel laminated composite material.

5.3.6.1 Welded joints of aluminium-steel semi-finished products to steel and aluminium hull structural members shall be made by separate welding of layers between similar materials using fillet, overlap or butt welds.

5.3.6.2 Welding processes shall be approved in accordance with Sections 6 and 7, Part XIV "Welding".

5.3.6.3 The edge preparation for welding shall be in accordance with the national standards and/or drawings approved by the Register.

The edge preparation shall be effected by machining or grinding. The edges of parts to be assembled shall fit each other closely and shall not be out of alignment on the internal side of steel layer.

5.3.6.4 Welding consumables for the steel layer shall be in accordance with the requirements of 4.2 and for the aluminium layer, with the requirements of 4.7, Part XIV "Welding".

5.3.6.5 The weld shall be made first on the steel layer side and then on the aluminium layer side.

5.3.6.6 Welding on the steel layer side shall be so done that no melting of the aluminium layer forming part of the aluminium-steel semi-finished product occurs.

5.3.6.7 Prior to welding on the aluminium layer side, the weld root on the steel layer side shall be cut out to sound metal by machining or grinding only. Cutting out of the weld root by means of abrasive disks is not permitted.

5.3.6.8 Full-width of the edge preparation, high-alloyed welding consumables shall be deposited on the surface of welded edges of the steel layer to ensure good wetting when filling in the grooves with aluminium filler materials.

5.3.6.9 Immediately before welding (tack welding), the edges of aluminium alloy components shall be degreased with special solvents (acetone, alcohol, benzene, etc.) and then cleaned with wire brushes. In the case of multirun welding, each run of deposit shall be brushed before the next run is applied.

5.3.6.10 Welding consumables of aluminium and aluminium alloys shall have their surfaces cleaned from dirt and oxide film.

5.3.6.11 When filling in the groove between the edges to be welded of the aluminium layer forming part of the aluminium-steel semi-finished products, unalloyed aluminium welding consumables shall be deposited by the first run. Aluminium shall be deposited on steel surface on which high-alloyed welding consumables were deposited (refer to 5.3.6.8) to avoid its mixing up with the steel layer metal.

5.3.6.12 Subsequent filling-in of the groove between the edges to be welded of the aluminium layer forming part of the aluminium-steel semi-finished products shall be effected with welding consumables in compliance with the requirements of 4.7, Part XIV "Welding". The weld on the aluminium layer side shall be made of two layers at least. In welding the aluminium layer, transverse weaving of electrodes is not permitted.

5.4 LARGE-SCALE LIGHTWEIGHT WELDED PANELS OF WROUGHT ALUMINIUM ALLOYS

5.4.1 General.

5.4.1.1 These requirements cover large-scale lightweight welded panels of wrought aluminium alloys (hereinafter, LLW-panels) 2 to 6 mm thick, intended for ship's hull structures, superstructures and other offshore installation structures subject to RS technical supervision during their manufacture.

5.4.1.2 LLW-panels of wrought aluminium alloy are manufactured by the method of friction stir welding (FSW) of semi-finished products without using the welding consumables. As basic materials, the rolled and pressed semi-finished products of wrought aluminium alloy complying with the requirements of 5.1 are used.

The suppliers of basic materials for manufacture of LLW-panels shall be recognized by the Register. The procedure of recognition of manufacturer, issuance, confirmation and reissuance of СПИ is given in 2.1 of Part III "Technical Supervision during Manufacture of Materials" of the Rules for Technical Supervision during Construction of Ships and Manufacture of Materials and Products for Ships.

5.4.1.3 LLW-panels shall be manufactured in compliance with the RS-approved documentation. The manufacturer of LLW-panels shall be recognized by the Register in compliance with 1.3.1.2.

5.4.2 Chemical composition.

5.4.2.1 The chemical composition and mechanical properties of the basic semi-finished products used during manufacture of LLW-panels shall meet the requirements of 5.1 and comply with the documentation approved by the Register.

5.4.3 Mechanical properties.

5.4.3.1 The strength of welded joints of LLW-panels shall comply with the requirements of Table 5.4.3.1.

Table 5.4.3.1

The strength of welded joints of LLW-panels of wrought aluminium alloys

Basic materials		Condition of supply of basic semi-finished products	Strength factor of a welded joint[1], min
Rolled semi-finished products	5083, 5383, 5059, 5754, 5086, 5456, 1550 1561 8799 1575	O/H111/H112	1
	5083, 5383, 5059, 5086, 5456	H116/H321	0,95
	1561H, 1565ч	H32/H321	0,95
Pressed semi-finished products	5083, 5383, 5059, 5754, 5086, 5456, 1550 1561 8799 1575	O/H111/H112	1
	6005A, 6061, 6082	T5/T6	0,7

[1] defined by the formula $\sigma_t^{w.j.}/\sigma_t^{b.m.}$, where
$\sigma_t^{w.j.}$ — yield strength of a welded joint;
$\sigma_t^{b.m.}$ — guaranteed yield strength of base metal.

5.4.3.2 During quasi-static three-point bending (three-point bend test) of LLW-panels, the specimen surface shall have no individual cracks of length greater than 3 mm in any direction. In this case, the cracks on the specimen edge may be neglected if their recurrence was not caused by poor fusion. Testing conditions shall comply with requirements of Table 5.4.3.2.

Table 5.4.3.2

Conditions of three-point bend test of LLW-panels

Base metal grade	Mandrel diameter D^1, mm	Bending angle
5754	3*t*	180°
1550, 1561, 1561H, 1565ч, 1575, 5083, 5383, 5059, 5086, 5456, 6005A, 6061, 6082	6*t*	180°
[1]*t* — thickness of the test specimen, mm.		

5.4.4 Sampling.

5.4.4.1 Samples for mechanical properties determining shall be taken so that the longitudinal axis of the manufactured test specimens is oriented perpendicular to the weld axis. The samples shall be taken at a distance not less than 20 mm from the beginning and the end of the of the weld.

Sampling and preparation of test specimens shall be carried out by the methods preventing the possible change of the material properties due to hardening.

Each specimens shall be marked in such a way as to monitor detecting the semi-product, sampling location and specimen orientation.

5.4.4.2 The following types of specimens shall be fabricated and tested from each test piece for a butt joint:

two flat specimens for uniaxial tensile tests;

two face welded joint specimens for quasi-static three-point bending (three-point bend test);

two back (root) surface welded joint bend test specimens;

a specimen in the weld cross-sectional area for detecting macrostructure.

5.4.5 Scope of testing.

5.4.5.1 LLW-panels of wrought aluminium alloys are presented for tests in batches.

A batch shall comprise LLW-panels manufactured during one operating practice from basic semifinished products of the same grade, type, dimensions and condition of supply).

5.4.5.2 During the initial survey for recognition of LLW-panels manufacture by the Register according to 1.3.1, the scope of testing shall be based on the program developed by the manufacturer of LLW-panels and approved by the Register. The control test program shall be developed to confirm the product quality stability.

5.4.5.3 During manufacture, the scope of testing shall be determined on the basis of the material delivery documentation approved by the Register or the RS-agreed national/international standard. In both cases, as a minimum, number of tests shall include static tensile tests, bend test, studies of the weld cross-sectional area macrostructure.

Static tensile tests and bend tests shall be carried out at the room temperature.

The bend tests shall be performed according to 2.2.5.1.

The studies of the weld cross-sectional area macrostructure shall be carried out to detect the weld internal defects, such as poor fusion, foreign inclusions, pores, cracks, discontinuities.

5.4.6 On-site monitoring.

5.4.6.1 The responsibility for fulfilment of the requirements for on-site monitoring shall be imposed on the manufacturer.

5.4.6.2 During the manufacture of LLW-panels the on-site monitoring shall be performed, including:

monitoring parameters of welding consumables;

monitoring condition of the edges and adjacent surfaces as well as of technological substrate;

quality control of welded billets to be assembled;

monitoring and making records of the welding procedure parameters;

5.4.6.3 Monitoring and making records of the welding procedure parameters shall include monitoring and readings of current time (or the weld position) as a minimum, a rotational speed

of welding consumables, welding speed, axial force on welding consumable. Frequency of parameter records shall be approved by the Register.

Records of the welding procedure parameters shall be documented and submitted at the Register request.

Conclusions on the on-site monitoring shall be included in the manufacturer's records.

5.4.6.4 In case of non-compliance with the requirements of 5.4.6.2 or 5.4.6.3, availability of individual tolerances of welding parameters, or conditions for welded billet to be assembled (for example, opening of clearances) detected during or welding procedure or after welding, non-destructive testing (NDT) of the appropriate weld or its part with recorded tolerances shall be performed in compliance with the requirements of 5.4.7.

5.4.7 Inspection.

5.4.7.1 For inspection of joints manufactured by friction stir welding with regard to recommendations of ISO 17635, the following non-destructive test methods shall be applied:

visual and measuring testing (VT) to detect (reveal) surface defects;

radiographic testing (RT) to expose internal defects;

eddy current test (ECT) to detect surface and subsurface defects in the weld root;

5.4.7.2 When using control systems of welding parameters and real-time thermogram records of the welding procedure with a resolution of at least 1 point/mm, the continuous control may not be performed along the weld's entire length by radiographic testing (RT) or eddy current test (ECT). In this case, the weld parts with recorded impermissible tolerances of thermal mode and/or welding parameters shall be subject to radiographic testing (RT) or eddy current test (ECT).

5.4.7.3 Visual and measuring testing (VT).

5.4.7.3.1 Visual and measuring testing of weld joints shall be performed in compliance with ISO 17637 or other RS-agreed standards.

5.4.7.3.2 All manufactured LLW panels are subject to visual and measuring testing.

5.4.7.3.3 Visual and measuring testing shall be performed to detect:

non-compliance of LLW-panels shape and size/dimensions with the specifications (drawings);

impermissible surfaced defects in welds and weld-affected zone.

5.4.7.3.4 LLW-panels shape and size shall comply with normative documents.

Tolerances in shape and size not specified in the normative documents shall not exceed permissible tolerances of the basic rolled and pressed semi-finished products specified in the national and international standards.

5.4.7.3.5 On the plating surface of LLW-panels the following is permitted:

flashes;

cracks, poor fusion in the weld root, craters;

defects impairing the end use of the product.

5.4.7.3.6 Minor defects are permitted on the plating surface of LLW-panels (such as scratches, marks, including those in groupings, abrasion, markings of welding consumable), where their height or penetration depth does not cause the panel plating going beyond the tolerance zone stipulated for the base metal.

It is permitted to rectify the detected surface defects by grinding or cleaning, provided these corrections do not change the size of LLW-panels out of the permissible tolerances stipulated for the base metal.

5.4.7.4 Radiographic testing (RT).

5.4.7.4.1 Radiographic testing of the welded joints of LLW-panels to detect internal defects.

5.4.7.4.2 Radiographic testing shall be performed in compliance with ISO 17636 or other RS-agreed standards.

5.4.7.4.3 In the welded joints of LLW-panels the following internal defects are permitted:

cracks;

poor fusion;

foreign inclusions, ducts with a diameter or width of more than 20 % of the nominal thickness of the welded edges and the total length of over 120 % of nominal thickness for any 100 mm of the weld.

5.4.7.4.4 On agreement with the Register, the ultrasonic testing is permitted instead of radiographic testing provided the testing procedure is approved by the Register. Ultrasonic testing of welded joints of thin-walled panels shall be performed by Lamb normal waves.

5.4.7.5 Eddy current test (ECT).

5.4.7.5.1 Eddy current test (ECT) shall be carried out to detect poor fusion in the weld root and subsurface planar defects.

5.4.7.5.2 Eddy current test shall be performed in compliance with the testing procedure approved by the Register.

5.4.8 Marking.

5.4.8.1 Each LLW-panel shall have the manufacturer's marking and the Register stamp clearly made in the specified manner and in a due place.

The marking shall include as a minimum:

name and/or identification of the manufacturer;

alloy grade and condition of supply in accordance with the requirements of this Chapter;

number of an LLW-panel batch or identification number in accordance with the system adopted by the manufacturer to trace back the whole production process.

6 PLASTICS and MATERIALS OF ORGANIC ORIGIN

6.1 GENERAL

6.1.1 This Section contains requirements for plastics and materials of organic origin used in hull and ship machinery structures for the manufacture of parts and structures, which are subject to survey by the Register.

The requirements of this Section may be also applied to plastics and materials of organic origin used in structures and products not normally surveyed by the Register, if their application has considerable effect on the safety of the ship as a whole.

As a rule, manufacture of all materials and items regulated by this Part shall be carried out in accordance with the documentation, approved by the Register, at works having the quality system approved by the Register and the Type Approval Certificate issued by the Register for the manufactured type of products.

6.1.2 All plastics and materials of organic origin shall satisfy the following requirements unless there are special provisions regarding them in the chapters of the Section:

.1 their combustibility, flame spread, ignatability and also by the volume of smoke and quantity of toxic substances shall be assessed in conformity with 1.6, Part VI "Fire Protection";

.2 they shall ensure reliable operation of items and structures on the open deck at temperatures from –40 to +70 °C and in the interior spaces of the ship at temperatures from –10 to +70 °C unless their service conditions provide for lower or higher operating temperatures;

.3 they shall resist embrittlement and reduction of mechanical properties in service by more than 30 % in comparison with the original values;

.4 they shall resist decay and destruction by fungi and not to affect adversely the materials, with which they come into contact.

6.1.3 Scope of technical supervision.

6.1.3.1 The main provisions defining the scope and procedure of technical supervision are stipulated in Section 3, Part III "Technical Supervision during Manufacture of Materials" of the Rules for Technical Supervision during Construction of Ships and Manufacture of Materials and Products for Ships.

6.1.3.2 Technical supervision over manufacture of materials and products at works includes:

review and analysis of the manufacturer's application with attachments thereto (refer to 6.1.3.2.1);

survey of the works including the quality system assessment and control testing of products (refer to 6.1.3.2.2);

issue of the Register Certificate (refer to 6.1.3.2.3).

6.1.3.2.1 Application shall be supplemented by the following documents:

.1 information describing the works and its products (documents confirming the works status, its structure, production and control management schemes);

.2 list of manufactured materials and products;

.3 information on the staff of employees and their qualification;

.4 information on qualification of the personnel involved in the product quality system;

.5 information on availability of ISO 9001 standards;

.6 information on available approvals by other classification societies and results of earlier tests, also data on practical application of materials and products indicated in the application confirming the possibility of their application for intended purpose;

.7 Quality Manual with description of quality policy;

.8 procedures and instructions describing production processes, sources of supply and stockyards of source materials, storage of finished products;

.9 data on periodical control equipment and devices employed in the process of production, as well as equipment of the works laboratory;

.10 specifications or other technical documents describing materials mentioned in the application and defining their main characteristics and conditions of manufacture;

.11 rules for safe utilization of materials or products;

.12 program of testing the specimens of materials or products compiled on the basis of requirements of these Rules.

6.1.3.2.2 If the results of consideration of the submitted documentation are positive, a survey of the manufacturer's works is undertaken; it is aimed at establishing the actual condition of organization and quality control processes including products manufacture, as well as control tests in accordance with the program approved by the Register.

If the tests of products in question cannot be conducted at the manufacturer's works, it can be done at a laboratory approved by the Register.

6.1.3.2.3 Where results of the manufacturer's and products survey are satisfactory, the Register Certificate for works and products is issued.

6.2 FIBER-REINFORCED PLASTICS

6.2.1 General.

The present requirements cover materials for the manufacture of fiber-reinforced plastics (FRP) for ship structures and products subject to the RS survey.

Requirements for fiber-reinforced plastics and their components for ship hulls, boats and superstructures are specified in Section 2 Part XVI "Structure and Strength of Fiber-Reinforced Plastic Ships".

6.2.2 Reinforcement material.

6.2.2.1 As reinforcement material, glass-fiber materials in the form of rovings, roving cloths, twisted composite filaments, mats and chemically bonded roving lengths may be used.

6.2.2.2 The application of a reinforcement material other than glass fiber may be permitted on the basis of the test results confirming the possibility of its application.

6.2.2.3 The moisture content in glass-fiber reinforcement material shall not exceed 0,2 % of the mass of the material.

6.2.2.4 Cloths of glass-fiber reinforcement material shall be treated with water-repellent adhesive compound to ensure a secure bond with the resin applied.

6.2.2.5 The adhesive in glass-fiber reinforcement materials, by which the bondage of roving lengths is ensured in mat, shall be well soluble in the resin without any adverse effect on its properties. A rapid solution of the adhesive shall not result in the mat collapsing while being impregnated with the resin.

6.2.2.6 The mechanical properties of reinforcement materials shall be in compliance with the RS-agreed documentation.

6.2.2.7 Each batch of reinforcement material shall be provided with the Manufacturer's Certificate stating the following:

manufacturer;
mark;
type of cloth;
weight per unit length or area;
type of resin, for which the water-repellent adhesive treatment was made;
test results.

6.2.3 Bonding agent.

6.2.3.1 When manufacturing fiber-reinforced plastics, polyester resins approved by the Register shall be used as bonding agent base.

6.2.3.2 Application of polyester resins is recommended.

6.2.3.3 Addition of pigments and other colouring agents adversely affecting the resin properties is permitted for the decorative layer compound only, and their content shall not exceed 15 % of the resin weight.

6.2.3.4 Under the effects of sea water in conformity with 2.3.12.1, oil products in conformity with 2.3.11.2 and ageing in conformity with 2.3.10.1, the mechanical properties of resin shall not deteriorate by more than 25 % as compared to their initial values. Tests may be conducted for both the hardened resin itself and as part of a FRP (with reinforcement material).

6.2.3.5 Instructions on the application and storage of the resin shall be submitted to the Register together with the documentation proper, which, among other things, shall specify the chemical resistance of the resin to the exposure to various aggressive media.

6.2.3.6 Each batch of resin shall be provided with the Manufacturer's Certificate stating the following:

manufacturer;
mark;
test results.

6.3 LAMINATED TEXTILES

6.3.1 General.

The present requirements apply to textiles subject to survey by the Register, which have a rubber or plastic watertight coating and are intended for structures that are under pressure during their service.

6.3.2 Properties.

6.3.2.1 Laminated textiles shall be air-tight and shall comply with the requirements of Table 6.3.2.1.

Table 6.3.2.1

Mechanical properties

Tensile strength, kN/5, cm		Fracture elongation, %		Tear propagation strength, N		Coating adhesion, N/cm
warp	weft	warp	weft	warp	weft	
min		max		min		
1	2	3	4	5	6	7
2,0		35		40		10
Note. The tensile strength may be reduced to equal the strength required by the Register for the envelopes of particular structures, but not more than to four times the hoop stress developed in gas-filled pipes under the pressure, at which safety valves open.						

6.3.2.2 After ageing and bend test, the change of tensile strength in laminated textiles shall not be more than 10 % of that before ageing, and the difference of dimensions along the warp and weft before and after ageing shall not be more than 2 %.

When the adhesive joints of laminated textiles are tensile-tested before and after ageing, the rupture shall occur in the base material.

6.3.2.3 No stickiness, cracks, delaminations or colour modifications shall be observed on the surface of laminated textiles after testing for bending, ageing, creasing and shape stability after ageing, oil resistance, cold resistance, resistance to ozone and sea water.

6.3.2.4 The colouring agents applied shall not detrimentally affect the properties of the base material.

6.3.3 Sampling.

Sampling for test specimens shall be effected from each batch of laminated textiles 0,1 m from the edge and at least 1 m from the roll end. Samples shall be taken 24 h after fabrication at the earliest.

6.3.4 Scope of testing.

6.3.4.1 Laminated textiles are submitted for tests in batches. A batch consists of one roll fabricated during one manufacturing cycle.

If the results of mechanical testing are continuously satisfactory, the mass of material comprising the batch may be increased.

6.3.4.2 For each batch, tensile tests to determine fracture elongation as stated in 2.3.2.2, test to determine tear propagation strength as stated in 2.3.2.3 on ten specimens each (five along the warp and five along the weft), delamination test as stated in 2.3.2.4 on three specimens and air permeability test as stated in 2.3.13 on two specimens shall be effected, and the material mass shall be determined in accordance with an agreed standard.

6.3.4.3 For the purpose of laminated textiles approval, tensile test after ageing in accordance with 2.3.10.2, bend test in accordance with 2.3.5.3, test of the bond joints of laminated textiles before and after ageing in accordance with 2.3.2.5 on ten specimens each (five along the warp and five along the weft), creasing and shape stability test after ageing in accordance with 2.3.10.3, oil product resistance test in accordance with 2.3.11.2, sea water resistance test in accordance with 2.3.12.2, cold resistance test in accordance with 2.3.14 and ozone resistance test in accordance with 2.3.15 shall be effected in addition to those mentioned under 6.3.4.2.

6.3.4.4 The test results shall comply with the requirements of 6.3.2 and shall be given in the Manufacturer's Certificate.

6.3.5 Inspection.

On the surface of laminated textiles, damage, recesses, dead folds, textile flaw marks, spots, blisters, porosity or other defects, which may preclude their application in accordance with the purpose, are not permitted.

6.3.6 Marking.

Marking of laminated textiles is effected in accordance with 1.4. In addition, the mass of material per unit of area shall be stated.

6.4 FOAM PLASTICS

6.4.1 General.

The present requirements apply to foam plastics used for the manufacture of items subject to survey by the Register.

6.4.2 Properties.

6.4.2.1 By their properties and conditions of application, foam plastics are subdivided into three grades:

grade 1 is represented by rigid foam plastics for filling up the spaces between supporting surfaces of sandwich structures;

grade 2 is represented by rigid foam plastics for filling up the air chambers of lifeboats and other similar hollow spaces;

grade 3 is represented by elastic foam plastics for the manufacture of buoyant material for life jackets.

6.4.2.2 Foam plastics shall chiefly have closed-cell structure.

6.4.2.3 The shrinkage of grades 1 and 2 foam plastics shall not result in poor adhesion to boundary surfaces.

6.4.2.4 The physical and mechanical properties of grade 1 foam plastics shall be in accordance with Table 6.4.2.4.

Table 6.4.2.4

Apparent density, min, g/cm^3	Bending strength, min, MPa	Modulus of elasticity in bending, min, MPa	Compression strength, min, MPa	Modulus of elasticity in compression, min, MPa	Water absorption in 24 h, max, kg/m^2
0,8	0,3	12	0,7	30	0,2

6.4.2.5 The physical and mechanical properties of grades 2 and 3 foam plastics shall be in accordance with the Register-approved documentation.

6.4.2.6 Under the effects of sea water and petroleum products, the mechanical properties of grade 1 foam plastics shall not deteriorate by more than 25 % as compared to the initial values.

6.4.2.7 Under the effects of 10 cycles of temperature variation in conformity with 2.3.1, high-octane petrol in conformity with 2.3.11.3 and fresh water as stated in 2.3.9.2, the buoyancy of grade 2 foam plastics shall not be reduced by more than 5 % of the initial value.

6.4.2.8 When approving foam plastics of grade 2, they shall also be tested by conditioning in oil products in conformity with 2.3.11.4.

6.4.2.9 Under the effects of 10 cycles of temperature variation in conformity with 2.3.16 and of fresh water as stated in 2.3.9.2, the floatability of grade 3 foam plastics shall not be reduced by more than 5 %, and if they come additionally under the effects of diesel oil in conformity with 2.3.11.3, it shall not be reduced by more than 10 % of the initial value.

6.4.2.10 The cyclic effects of temperature, oil products and fresh water shall not bring about a deterioration of the mechanical properties of grades 2 and 3 foam plastics.

6.4.3 Sampling.

Samples shall be cut out in the middle of a foam-plastic block, and a section with the most uniform cell structure shall be chosen for the purpose.

6.4.4 Scope of testing.

6.4.4.1 Testing of grade 1 foam plastics.

6.4.4.1.1 Compression strength is determined on three specimens in compliance with 2.3.3.2, and for this purpose the maximum load causing an abrupt failure of the foam plastic structure is determined, which shall be reached within 1 min approximately.

6.4.4.1.2 Apparent density is determined on three specimens in compliance with 2.3.7.

6.4.4.1.3 Bending strength is determined on three specimens in compliance with 2.3.5.1.

6.4.4.1.4 Water absorption is determined on five specimens in compliance with 2.3.9.

6.4.4.1.5 Resistance to oil products is determined in conformity with 2.3.11.2, and to sea water, in conformity with 2.3.12.1. Each of the tests is made on three specimens only at the time of the foam plastic approval.

6.4.4.2 Grade 2 and 3 foam plastics are tested in conformity with technical documentation approved by the Register.

6.4.5 Inspection.

During the inspection, the surface structure of the foam plastic shall be checked at cross section for closed cells.

Under the cyclic effects of temperatures, oil products and fresh or sea water, no cracks, bulges or disintegration shall be visible on the foam plastic surface.

6.4.6 Marking.

The marking of foam plastics is effected in conformity with 1.4.

The test results shall be entered in the Manufacturer's Certificate.

6.5 PROTECTIVE COATINGS

6.5.1 Anticorrosive protective coatings.

6.5.1.1 Epoxy-based coatings or equivalent shall be applied to the inner surfaces of ballast tanks in accordance with the manufacturer's recommendations. Light colours of the coatings are the most preferable.

6.5.1.1.1 For ships covered by SOLAS-74 with regard to IMO resolution MSC.216(82), all dedicated seawater ballast tanks arranged in ships and double-side skin spaces arranged in bulk carriers shall be coated in accordance with the Performance Standard for Protective Coatings (IMO resolution MSC.215(82)).

The following tanks shall not be considered to be dedicated seawater ballast tanks and shall therefore be exempted from the application and requirements of IMO resolution MSC.215(82):

ballast tanks identified as "Spaces included in Net Tonnage" in the 1969 ITC Certificate;

sea water ballast tanks in passenger ships also designated for the carriage of grey water or black water confirmed by the coating manufacturer to be resistant to the media stored in these tanks and provided such coatings are applied and maintained according to the coating manufacturer's procedures;

sea water ballast tanks in livestock carriers also designated for the carriage of the livestock dung confirmed by the coating manufacturer to be resistant to the media stored in these tanks and provided such coatings are applied and maintained according to the coating manufacturer's procedures.

6.5.1.2 Protective coatings for cargo tanks of oil tankers specified in 1.2.5.3, Part II "Hull" shall meet the requirements of IMO resolution MSC.288(87).

6.5.1.3 Protective coatings of internal surfaces of the cargo holds and external surfaces of hatch coamings and hatch covers required by 3.3.5.1, Part II "Hull" shall be applied in accordance with the recommendations of the manufacturer.

6.5.1.4 It is recommended to protect the inner spaces of cofferdams, duct keels, supports of transverse bulkheads and other similar void spaces of oil tankers and bulk carriers with protective coatings in accordance with IMO resolution MSC.244(83).

6.5.1.5 The procedure for approval of protective coatings of hull structures is given in Section 3, Part III "Technical Supervision during Manufacture of Materials" of the Rules for Technical Supervision during Construction of Ships and Manufacture of Materials and Products for Ships.

6.5.1.6 Inspection of protective coatings of hull structures is carried out in accordance with 2.12.7 of the Guidelines on Technical Supervision of Ships under Construction.

6.5.1.7 Requirements for aluminium coatings, as well as coatings used for interior decoration of the spaces, are specified in 2.1.1.7, Part VI "Fire Protection".

6.5.2 Antifouling coatings.

6.5.2.1 The present requirements apply to antifouling coatings of ships of 400 gross tonnage and above engaged in international voyages, including fixed and floating platforms, floating facilities for oil production, storage and offloading, and consider the provisions of the International Convention on the Control of Harmful Anti-Fouling Systems on Ships, 2001 (hereinafter — the AFS-Convention) and Regulation (EC) No. 782/2003 of the European Parliament and of the Council of 2003.

6.5.2.2 Organotin compounds acting as biocides shall not be used on ships as anti-fouling coatings.

It is allowed to use minor quantity of organotin compounds acting as chemical accelerator (such as monosubstituted and disubstituted organotin compounds) provided they do not act as biocides. If used as an accelerator the organotin compounds shall not contain more than 2500 mg of tin in 1 kg of dry colour.

6.5.2.3 Antifouling coatings shall be supplied with the Register Type Approval Certificate. If the Register Type Approval Certificate is not available the provisions of 2.15 and 2.16, Part I

"General Regulations for Technical Supervision" of the Rules for Technical Supervision during Construction of Ships and Manufacture of Materials and Products for Ships shall be considered.

Instructions on issuance of Type Approval Certificate are given in 3.1, Part III "Technical Supervision during Manufacture of Materials" of the Rules for Technical Supervision during Construction of Ships and Manufacture of Materials and Products for Ships.

Instructions on the initial survey in accordance with the AFS-Convention are given in 19.15 of the Guidelines on Technical Supervision of Ships under Construction — for ships under construction, and in 2.4, Part III "Survey of Ships in Compliance with International Conventions, Codes and Resolutions" of the Guidelines on Technical Supervision of Ships in Service — for ships in service.

6.5.3 Ice-resistant coatings.

6.5.3.1 Coating is considered ice-resistant if it provides the protection of the ship′s hull shell against the external actions under the ice navigation conditions demonstrating the performance, which meets the requirements in Table 6.5.3.1.

Table 6.5.3.1

Nos.	Characteristic	Value			
		Group 1 for icebreakers		Group 2 for ice class ships	
		Class I	Class II	Class I	Class II
1	Durability as per ISO 12944-6 for a corrosivity category Im2 in compliance with ISO 12944-2 (refer to 2.5.1)	High		High	
2	Adhesion by a cross-cut test method as per ISO 2409 or X-cut test method as per ISO16276-2 after testing for resistance to low temperature exposure (refer to 2.5.2.3) depending on the thickness and type of ice-resistant coating.	not more than 3		not more than 3	
3	Adhesion strength as per ISO 4624 (refer to 2.5.3.4)	above 16 MPa	above 10 MPa	above 10 MPa	above 8 MPa
4	Abrasive wear after 1000 cycle tests on the Taber's abrader (wheel CS-17) (refer to 2.5.4)	not more than 80 mg	not more than 120 mg	not more than 120 mg	not more than 160 mg
5	Impact resistance as per ISO 6272 (refer to 2.5.5)	not less than 5 J		not less than 5 J	
6	Cathode disbondment as per ISO 15711 (method A) (refer to 2.5.6) for coatings compatible with cathode protection	less than 5 mm after three month testing, less than 8 mm after six month testing		less than 5 after three month testing, less than 10 mm after six month testing	
7	Coefficient of sliding friction for ice (refer to 2.5.7)	not exceeding 0,05	not exceeding 0,08	not exceeding 0,05	not exceeding 0,08

Ice resistant coatings shall be mandatorily applied for ice class ships and icebreakers in case of reduction of average annual diminution of shell plating as a result of corrosion wear and abrasion in accordance with 3.10.4.1, Part II "Hull", as well as in case of assignment of distinguishing mark **ICE-COAT** at the shipowner's discretion (without reduction of average annual diminution of shell plating as a result of corrosion wear and abrasion). The coatings shall be divided into groups and classes in accordance with Table 6.5.3.1.

6.5.3.2 Ice resistant coatings of ice class ships shall be applied not less than 1,0 m above the upper boundary and not less than 1,0 m below the lower boundary of ice strengthening. Ice resistant coatings of icebreakers shall be applied to the underwater part of the hull and its side

at the height not less than 1,0 m above the upper boundary of ice strengthening. The above requirements to the boundaries of ice resistant coating application for ships of ice classes **Ice1 — Ice3** may be reduced to the boundary of ice strengthening on agreement with the Register taking into account structural particulars of the ship.

Ice resistant coating is not required in case of application of clad steel in the area of ice strengthening, if relevant means of electrochemical protection against corrosion are installed.

Documentation of coating manufacturer shall be agreed between the shipowner, shipyard and coating manufacturer and shall be submitted to the Register for review.

When applying several layers of ice resistant coating of ice class ships and icebreakers, it is recommended to use different colours for each layer.

6.5.4 Primers not removed before welding.

6.5.4.1 Shop primers are thin-layer (up to 30 microns) lacquer coatings, preserving the steel surface from corrosion during transportation, storage and assembly of a structure until the final painting is done.

6.5.4.2 The requirements for qualification testing of all kinds of shop primers not removed before welding for their susceptibility to porosity are specified in 2.6.

6.5.4.3 Welding of structures subject to the RS technical supervision without removing the shop primer is permitted only provided the latter complies with the requirements of 6.5.4.4, which is confirmed by the Register Certificate or manufacturing testing at the manufacturers' of welded structures (shipyards) under the Register supervision, as well as the requirements of 6.5.4.5.

6.5.4.4 A primer not removed before welding shall have the following results of qualification testing performed in compliance with the requirements of 2.6: the mean total pore area at the fracture of a singlerun fillet joint shall not exceed 150 mm^2.

6.5.4.5 The requirements for testing of shop primers at the manufacturers' of welded structures.

The acceptance of shop primers not removed before welding is performed on the basis of the satisfactory test results complying with the requirements of 6.5.4.4 and stated in the reports signed by the RS surveyor. The test results are valid only for the particular mark of the shop primer subjected to testing and supplied by the particular manufacturer.

6.6 ROPES OF NATURAL and SYNTHETIC FIBRE

6.6.1 The present requirements apply to ropes, subject to survey by the Register, which are intended for cargo handling gear, life-saving appliances and other ship appliances.

6.6.2 The ropes shall be manufactured and tested in conformity with standards approved by the Register.

The breaking load on a rope is determined by testing the rope as a whole.

6.6.3 The breaking load on a rope *F*, in kN, may be determined by the following formula:

$$F = c(\sum_1^m F_m)n/z \qquad (6.6.3)$$

where c = yarn efficiency factor for the rope, which shall be adopted on the basis of standards or calculated as the ratio of the breaking load on the rope as a whole to the total breaking load on all the yarns making up the rope, both the values being stipulated by the standards;
m = number of yarns, subjected to tensile testing, which conform to standards;
F_m = the greatest load, during the tensile test of a yarn, in kN, after which the specimen breaks;
n = number of yarns in a rope;
z = number of yarns subjected to tensile testing, which is adopted equal to 0,5*n* for ropes below 80 mm in diameter, 0,3*n* for ropes 80 to 115 mm in diameter and 0,1*n* for ropes over 115 mm in diameter.

6.6.4 A rope of synthetic fibre shall undergo testing to determine fracture elongation when requested by the customer.

The fracture elongation of a rope A_δ, in %, is determined by the formula

$$A\delta = \frac{lp - l_0}{l_0} \times 100 \qquad (6.6.4)$$

where l_0 = initial length of the rope specimen tested, in cm;
l_p = length of the same rope specimen under the load equal to the breaking load on the rope as a whole, which shall be found in the standard, in cm.

6.6.5 The compliance of the structure diameter and other parameters of the rope to the standard shall be confirmed by visual testing.

On the surface of a finished rope, no brown spots, mould, burned spots or smell of fume or rot shall be detectable.

The colour of the rope shall be uniform along its whole length and shall not differ from that of the yarn or synthetic fibre, of which the rope is manufactured.

6.6.6 The marking of the ropes is effected in conformity with 1.4.

6.6.7 The test results shall be entered in the Manufacturer's Certificate, the contents of which shall be agreed with the Register.

6.7 RETRO-REFLECTIVE MATERIALS FOR LIFE-SAVING APPLIANCES

6.7.1 General.

6.7.1.1 The present requirements apply to the retro-reflective materials of life-saving appliances subject to survey by the Register.

6.7.1.2 Proceeding from their service conditions, retro-reflective materials are divided into two types:

type 1 includes materials to be fitted on elastic surfaces occasionally exposed to the weather;

type 2 includes materials to be fitted on rigid surfaces continuously exposed to the weather.

6.7.2 Properties.

6.7.2.1 The tensile strength of retro-reflective materials with an adhesive layer shall not be less than 16 N/25 mm, and of those with a warp for mechanical attachment — 330 N/25 mm in the longitudinal direction and 200 N/25 mm in the transverse direction.

6.7.2.2 Proceeding from the entrance angle and observation angle, the values of the retroreflection factor *R*, in cd $lx^{-1} \cdot m^{-2}$, shall not be less than those to be found in Table 6.7.2.2.

Table 6.7.2.2

Entrance angle, deg.	Observation angle, deg.			
	0,1	0,2	0,5	1
5	180	175	72	14
30	140	135	70	12
45	85	85	48	9,4

6.7.2.3 When the material is under a water film and after ageing, the retro-reflection factor may be lowered by not more than 20 % as compared to Table 6.7.2.2, and after the abrasion test, it may be lowered by not more than 50 %.

6.7.2.4 Exposure to sea water, mildew, salt fog and ultimate temperatures shall not lower the retroreflection factor of the material.

6.7.2.5 For retro-reflective materials with an adhesive layer, the strength of adhesion to different surfaces shall not be less than 16 N/25 mm.

6.7.2.6 Exposure to ultraviolet irradiation, sea water and distilled water shall not lower the adhesion properties of retro-reflective materials with an adhesive layer.

6.7.3 Sampling.

The sample for the preparation of specimens is taken from each batch of retro-reflective materials at least one metre from the roll end.

Before the specimens have been prepared, the sample is conditioned in conformity with 2.3.1.1 during 24 h.

6.7.4 Scope of testing.

6.7.4.1 Retro-reflective materials are submitted for testing in batches. A batch comprises one roll manufactured during one production cycle.

Where the test results are stable, the bulk of the batch may be increased.

6.7.4.2 Each batch of the material is tensile-tested in conformity with 2.3.2.6, and the strength of adhesion to different surfaces is determined in conformity with 2.3.2.7 for the material with an adhesive layer, as well as the retro-reflection factor in conformity with 2.3.18.1.

6.7.4.3 When approving retro-reflective materials, besides the tests metnioned in 6.7.4.2, the retroreflection factor is determined for the material under a water film in conformity with 2.3.18.2, after ultraviolet irradiation in conformity with 2.3.10.4, abrasion in conformity with 2.3.22, sea-water conditioning in conformity with 2.3.12.3, exposure to salt fog in conformity with 2.3.12.4, to ultimate temperatures in conformity with 2.3.16 and mildew in conformity with 2.3.21. Besides, the bend test in conformity with 2.3.19, adhesion test in conformity with 2.3.20 and contaminant-resistance test in conformity with 2.3.23 are conducted.

For retro-reflective materials with an adhesive layer, the strength of adhesion to different surfaces shall be determined in conformity with 2.3.2.7 after exposure to the ultraviolet irradiation in conformity with 2.3.10.4 and to distilled and sea water in conformity with 2.3.12.5.

6.7.4.4 Each type of tests shall be conducted at least on three specimens.

6.7.4.5 The test results shall comply with the requirements of 6.7.2.

6.7.4.6 Under the effects of seawater during 10 min, salt fog and ultimate temperatures during 4 h, and after the bend and adhesion tests, no cracks, delamination, bulging, stickiness or change of colour shall be observed on the surface of retro-reflective materials, and their size shall be the same.

6.7.5 Inspection.

The surface of retro-reflective materials shall be free from injuries, recesses, creases, delaminations, stains or other defects, which might adversely affect their application in accordance with the purpose.

6.7.6 Marking.

The marking of retro-reflective materials shall be effected in conformity with 1.4.

The test results shall be entered in the Manufacturer's Certificate.

6.8 PLASTIC IPIPES and FITTINGS

6.8.1 General.

Plastic pipes shall comply with the requirements of RS-agreed standards.

6.8.2 Strength.

6.8.2.1 The strength of pipes shall be determined by hydraulic failure testing of specimens under the standard conditions: atmospheric pressure equal to 0,1 MPa, relative humidity 30 %, environmental and carried fluid temperature 25 °C.

6.8.2.2 The strength of fittings and joints shall not be less than that of pipes.

6.8.2.3 The nominal pressure p_{nom} shall be determined from the following conditions:

.1 internal pressure.

For internal pressure:

$p_{nom} < p_{sth}/4$ or $p_{nom} < p_{lth}/2{,}5$

where p_{sth} = short-term hydraulic test pipe failure pressure;
p_{nom} = long-term hydraulic test pipe failure pressure (more than 100 000 h);

.2 external pressure (for any installation that may be subject to vacuum conditions inside the pipe or a head of liquid acting on the outside of the pipe; and for any pipe installation required to remain operational in case of flooding damage, as per regulation II-1/8-1 of SOLAS-74, as amended, or for any pipes that would allow progressive flooding to other compartments through damaged piping or through open ended pipes in the compartments).

For external pressure:

$p_{nom} < p_{col}/3$

where p_{col} = pipe collapse pressure.

In any case the collapse pressure shall not be less than 0,3 MPa.

The maximum working external pressure is a sum of internal vacuum and external pressure of the pipe tested.

6.8.2.4 Notwithstanding the requirements of 6.8.2.3, as applicable, the pipe or pipe layer minimum wall thickness shall follow agreed standards. In the absence of standards for pipes not subject to external pressure, the requirements of 6.8.2.3.2 shall be met.

6.8.2.5 The maximum permissible working pressure shall be determined taking into account the maximum possible working temperatures in accordance with the manufacturer's recommendations.

6.8.3 Axial strength.

The sum of longitudinal stresses because of pressure, weight and other loads shall not exceed the allowable stress in the longitudinal direction.

For fibre reinforced plastic pipes the sum of longitudinal stresses shall not exceed the half of nominal circumferential stresses determined under nominal pressure.

6.8.4 Impact resistance.

Plastic pipes and joints shall have a minimum resistance to impact in accordance with the agreed national or international standards.

After the test the specimen shall be subjected to hydrostatic pressure equal to 2,5 times the design pressure for at least 1 h.

6.8.5 Temperature.

6.8.5.1 The permissible working temperature depending on the working pressure shall be determined in accordance with the manufacturer's recommendations, but in any case, it shall

be at least 20 °C lower than the minimum heat distortion/deflection temperature of the pipe material, determined according to ISO 75 method A or equivalent (e.g., ASTM D648).

6.8.5.2 The minimum heat distortion/deflection temperature shall not be less than 80 °C.

6.8.6 Fire protecting coatings.

Where fire protecting coatings of pipes and fittings are used for achieving the required fire resistance level, they shall comply with the requirements of 6.8.6.1 to 6.8.6.4.

6.8.6.1 As a rule pipes shall be delivered from the manufacturer with fire protecting coatings on.

6.8.6.2 Fire protecting properties of coatings shall not be diminished when exposed to sea water or oil products. It shall be demonstrated that the coating is resistant to products likely to come into contact.

6.8.6.3 In considering fire protecting coatings such characteristics as thermal expansion, resistance against vibrations and elasticity shall be taken into account.

6.8.6.4 Fire protecting coatings shall have sufficient resistance to impact to retain their integrity.

6.8.7 Electrical conductivity.

When the electrical conductivity is to be provided, the electrical resistance of pipes and fittings shall not exceed 1×10^5 Ohm/m.

6.8.8 Materials approval and quality control during manufacture.

6.8.8.1 Plastic pipes and fittings shall be manufactured by the works having the quality system approved by the Register. The Register-confirmed compliance of the works' quality management system with ISO 9001 shall be considered acceptable.

6.8.8.2 Specimens of pipes and fittigs of each type and size shall be tested for compliance with the requirements of the Rules.

6.8.8.3 Serial specimens of pipes (except for pipes specified in 3.2.3 of Part VIII "Systems and Piping") and fittings for tests determining strength, fire resistance and low surface flame spread characteristics, electrical resistance (for electrically conductive pipes) shall be chosen in accordance with the procedure approved by the Register.

6.8.8.4 Each pipe and fitting shall be tested by the manufacturer at a hydrostatic pressure not less than 1,5 times the nominal pressure.

Alternatively, for pipes and fittings not employing hand lay up techniques, the hydrostatic pressure test may be carried out in accordance with the hydrostatic testing requirements stipulated in the agreed national or international standard to which the pipe or fittings are manufactured, provided that there is an effective quality system in place. If the Register deems it necessary, it may require special pressure testing of each pipe and fitting depending on the system intended application.

6.8.8.5 Pipes and fittings shall be permanently marked with identification in compliance with the agreed standard. Identification shall include the nominal pressure, the design standard, in accordance with which the pipe is manufactured, and the pipe material.

6.8.8.6 In case the manufacturer does not have the quality system approved by the Register, each batch of pipes and fittings shall be tested for compliance with the requirements of the Rules under the technical supervision of the surveyor to the Register.

6.9 POLYMER COMPOSITE MATERIAL FOR THE GANGWAYS OF OIL TANKERS

6.9.1 The requirements of this Chapter apply to the polymer composite material (fiber-reinforced plastic) of the gangways of oil tankers as specified in 8.6.9, Part III "Equipment, Arrangements and Outfit".

6.9.2 Material shall comply with the following requirements:

6.1 of this Part;

possessing the characteristics of low flame spread, non-excessive smoke and toxic products generation at elevated temperatures in accordance with 1.6, Part VI "Fire Protection";

possessing the constructive integrity as a result of fire exposure defined by the standards recognized by the Register (ASTM F3059-14 standard may be applied).

6.10 POLYMER MATERIALS INTENDED FOR INSTALLATION OF MACHINERY, EQUIPMENT, SHIP'S ARRANGEMENTS and THEIR COMPONENTS

6.10.1 The requirements of this Chapter apply to polymer material intended for installation of machinery, equipment, ship's arrangements and their components unless stipulated otherwise in the technical documentation approved by the Register. The standards specified in this Chapter may be replaced by other standards on agreement with the Register (refer to 8 of Appendix 2 to Section 5 of the Guidelines on Technical Supervision of Ships under Construction and 3.6.2, Part III "Technical Supervision during Manufacture of Materials" of the Rules for Technical Supervision during Construction of Ships and Manufacture of Materials and Products for Ships).

6.10.2 During type approval the polymer material shall be subjected to tests under RS technical supervision or in the laboratory recognized by RS to determine the following properties:

.1 compression strength (GOST 4651, ISO 604, ASTM D 695). Determined on the test specimens cut out from the source material;

.2 modulus of elasticity in compression (GOST 4651, ISO 604, ASTM D 695). Determined on the test specimens cut out from the source material;

.3 tensile test strength (GOST 32656, ISO 527). Determined on the test specimens cut out from the source material;

.4 impact toughness (GOST 4647, ISO 179-1). Determined on the test specimens cut out from the source material;

.5 load strain (GOST 4651, ISO 604, ASTM D621) Tests shall be carried out at temperatures of –40 °C, 20 °C and 80 °C;

.6 hardness (GOST 4670, ISO 2039-1 EN 59, ASTM D 2583);

.7 density of the cured material (GOST 15139, ISO 1183-1).

.8 glass transition temperature (recommended standards GOST R 55135, ISO 11357, ISO 11359);

.9 linear shrinkage (GOST 18616, ISO 3521). Shape and size of specimen and measuring instrumentation shall be selected based on the accuracy level with measured values;

.10 fatigue strength in compression. It shall be determined on the specimens, whose dimensions shall be taken the same as in compression test according to 6.10.2.1, subject to the following conditions: number of compression cycles is 107, frequency of cycles from 19 to 25 Hz. Minimum compression strain level in cycle of is 5 MPa, maximum is at least 0,2 of the ultimate material strength according to 6.10.2.1.

Residual strength value shall be calculated on the basis of the results of the subsequent specimen compression tests according to to 6.10.2.1;

.11 resistance to sea water, oil, fuel (GOST 12020, ISO 175). Test specimens are placed in vessels with a medium and conditioned there for 3 months Then compression tests are carried out with the specimens conditioned in a medium and of the test samples (not exposed to the medium). The compression strength is determined in per cent;

.12 resistance to ageing in accordance with 2.3.10.1, 2.3.10.2 or as per the standard approved by the Register.

6.10.3 The documentation specifying the material properties (technical specifications, etc.) shall contain the properties listed in 6.10.2 and confirmed by the relevant test report documents.

6.10.4 The technical documentation on materials shall include the following characteristics:

bending strength;
creep;
friction coefficient for steel (GOST 11629, ISO 8295);
linear thermal expansion coefficient;
electric strength;

material electric resistance;
mixture ductility during casting (prior to curing);
Barcol hardness;
curing time;
adhesion on steel;
Poisson ratio.

7 ANCHOR AND MOORING CHAIN CABLES

7.1 ANCHOR CHAIN CABLES AND ACCESSORIES

7.1.1 General.

7.1.1.1 The present requirements apply to the materials, design, manufacturing and testing of anchor chain cables and accessories used for ships. The requirements for the chafing chain for emergency towing arrangements are given in 7.1.6.

Unstudded chain cables may be manufactured according to the RS-agreed national or international standards.

7.1.1.2 Chain cables and accessories shall be made and tested by the manufacturers recognized in accordance with 1.3.1.2. In addition to the mentioned in 1.3.1.2, the request shall indicate the material grade, nominal dimensions and, if necessary, specification for the material. If there are several chain cable grades in the request, tests may be conducted only for the highest grade, provided the chain cable material, manufacturing methods and heat treatment are unchanged.

7.1.1.3 Depending on the tensile strength of the chain cable steel used for manufacture, stud link chain cables and accessories are subdivided into grades 1, 2 and 3.

7.1.2 Materials for chain cables and accessories.

7.1.2.1 All the materials used for the manufacture of chain cables shall be made by the manufacturers recognized in accordance with 1.3.1.2.

7.1.2.2 Unless otherwise stated, the rolled products, forgings and castings for chain cables and accessories shall meet the requirements of 3.6.

The Grade 1 rolled products may be used for the manufacture of chain cables with the Manufacturer's Certificates.

7.1.2.3 The studs shall be made of steel corresponding to that of the chain cable links or from rolled, forged or cast carbon steels.

The use of other materials, e.g. grey or nodular cast iron is not permitted.

7.1.3 Design and manufacture.

7.1.3.1 Chain cable links are manufactured by flash butt welding using bar material. Manufacture of the links by drop forging or steel casting is permitted.

Studless links of 26 mm diameter and below may be manufactured by pressure butt welding.

7.1.3.2 Accessories such as kenter and joining shackles, swivels and swivel shackles shall be forged or cast in steel of at least Grade 2.

These parts may also be welded.

7.1.3.3 The design of chain cable links and accessories shall comply with specifications approved by the Register bearing in mind Figs. 7.1.3-1 to 7.1.3-7 (dimensions on all figures are given multiple to the nominal diameter of the usual link), and length of chain cable shall comprise an odd number of links.

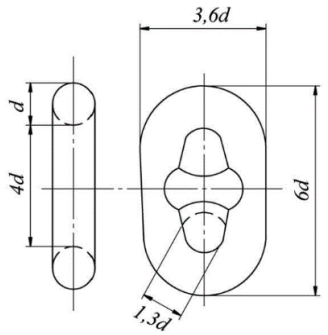

Fig. 7.1.3-1
Common link

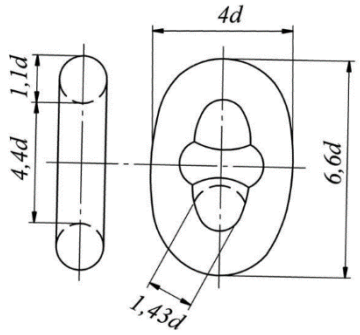

Fig. 7.1.3-2
Enlarged link

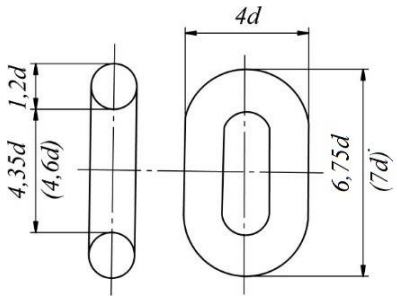

Fig. 7.1.3-3
Studless link

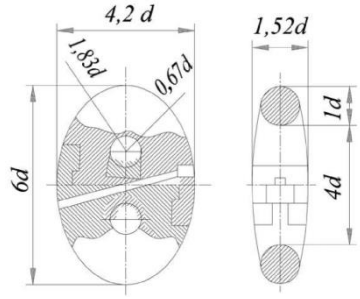

Fig. 7.1.3-4
Kenter joining link

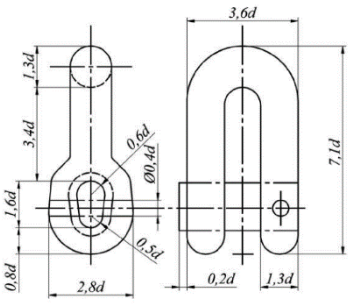

Fig. 7.1.3-5
Joining shackle

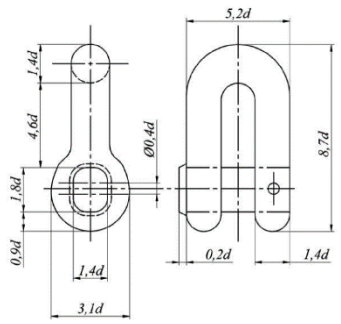

Fig. 7.1.3-6
End shackle

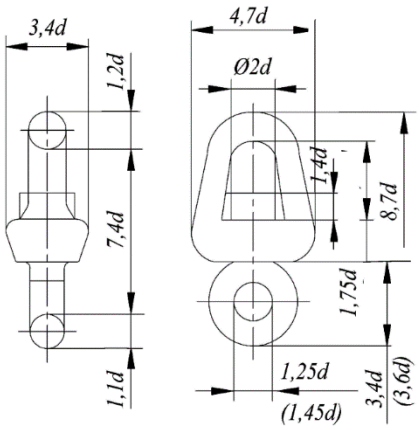

Fig. 7.1.3-7
Swivel

Where designs do not comply with this and where accessories are welded, relevant drawings shall be submitted to the Register, and the specification shall include full details of the manufacturing process and the heat treatment.

7.1.3.4 According to the grade of steel, chain cables and accessories shall be supplied in one of the conditions specified in Table 7.1.3.4.

The heat treatment shall be performed prior to mechanical tests and also prior to the breaking load and proof load testing.

Table 7.1.3.4

Steel grade	Condition of supply	
	Chain cable	Accessories
1	As welded or normalized	Not regulated
2[1]	As welded or normalized	Normalized
3	Normalized, normalized and tempered or quenched and tempered	Normalized, normalized and tempered or quenched and tempered
[1] Chain cables made by forging and casting shall be supplied in the normalized condition.		

7.1.3.5 The mechanical properties of the material of a finished chain cable and accessories shall be in accordance with Table 7.1.4.3.3.

7.1.3.6 Chain cables and accessories shall be manufactured in a manner such as to withstand the proof and breaking loads indicated in Table 7.1.4.1.2 depending on the relevant chain cable grade.

7.1.3.7 All chain links and accessories shall have a clean surface consistent with the method of manufacture and be free from cracks, notches, inclusions and other defects impairing the performance of the product. The flashes produced by upsetting or drop forging shall be properly removed. Minor surface defects may be fround off so as to leave a gentle transition to the surrounding surface. Remote from the crown local grinding up to 5 % of the nominal link diameter or item thickness may be permitted.

7.1.3.8 The dimensions of stud chain links and accessories shall comply with Figs. 7.1.3-1 — 7.1.3-7 and with approved specifications.

The dimensions of studless links shall comply with the requirements of the recognized standards and specifications approved by the Register.

7.1.3.9 Allowable tolerances of chain link dimensions.

7.1.3.9.1 Diameter tolerances in the elbow outside the link contact area shall comply with the requirements of Table 7.1.3.9.1.

Table 7.1.3.9.1

Allowable tolerances of chain link diameter

Nominal link diameter, mm	Allowable tolerances[1], mm
Up to 40	–1
Over 40 up to 84	–2
Over 84 up to 122	–3
Over 122	–4
[1] The plus tolerances shall not exceed 5 % of the nominal diameter.	

7.1.3.9.2 The cross-sectional area of the elbow shall have no negative tolerance.

For the purpose of determining the cross-sectional area the diameter adopted is an arithmetic mean of four values measured at points uniformly distributed along the cross section perimeter.

7.1.3.9.3 Allowable tolerance on assembly measured over a length of 5 links shall not exceed +2,5 % of the nominal length. The length of the chain cable shall be measured after applying a proof load and, preferably, at the loading of 10 % of the minimal value of the proof load.

7.1.3.9.4 Studs shall be located in the link centrally and perpendicular to longitudinal axis of the link, although the studs of the final link at each end of any length may also be located off-centre to facilitate the insertion of the kenter and joining shackles. The following tolerances are permitted provided, that the stud fits snugly and its ends lie practically flush against the inside of the link:

maximum off-centre distance *X*: 10 % of the nominal diameter *d*;

maximum deviation *α* from the 90° — position: 4°.

The tolerances shall be measured in accordance with Fig. 7.1.3.9.4.

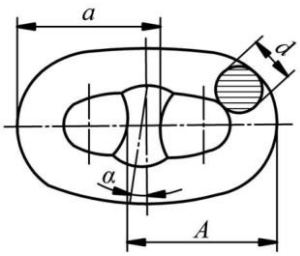

Fig. 7.1.3.9.4:

$$X = \frac{A - a}{2}$$

7.1.3.10 The following tolerances are applicable in accessories:

nominal diameter +5 % ± 0;

other diameter –2,5 %.

7.1.3.11 The welding of studs shall be in accordance with procedure approved by the Register subject to the following conditions.

The studs shall be of weldable steel in accordance with 7.1.2.3.

The studs shall be welded at one end only, i.e. opposite to the weldment of the link. The stud ends shall fit the inside of the link without appreciable gap.

The welds, preferably in the downhand position, shall be executed by qualified welders using suitable welding consumables.

All welds shall be carried out before the final heat treatment of the chain cable.

The welds shall be free from defects liable to impair the proper use of the chain cable. Undercuts, end craters and similar defects shall, where necessary, be ground off.

A procedure for the welding of chain studs shall be effected.

7.1.4 Testing of finished chain cables.

7.1.4.1 Proof and breaking load testing.

7.1.4.1.1 All finished chain cables shall be subjected to the tests specified below in the presence of a surveyor to the Register.

To ensure the proper visual testing of the chain cable and of its weld in particular, if present, the chain cables shall be submitted for tests free from paint and anti-corrosion media.

The tests shall be conducted on the equipment approved by the relevant competent organizations in the laboratory recognized by the Register and be witnessed by the Register representative.

7.1.4.1.2 Each chain cable length (27,5 m) shall be subjected to the proof load testing in accordance with the requirements of Table 7.1.4.1.2.

Table 7.1.4.1.2

Test	Steel grade		
	1	2	3
Proof load, kN	$0{,}00686d^2\times(44–0{,}08d)$	$0{,}00981d^2\times(44–0{,}08d)$	$0{,}01373d^2\times(44–0{,}08d)$
Breaking load, kN	$0{,}00981d^2\times(44–0{,}08d)$	$0{,}01373d^2\times(44–0{,}08d)$	$0{,}01961d^2\times(44–0{,}08d)$
Note. *d* = nominal diameter, mm.			

7.1.4.1.3 For the breaking load test, one sample comprising at least of three links shall be taken from every four length of the chain cable. The links concerned shall be made in a single manufacturing cycle together with the chain cable and be welded and heat-treated together with it. The breaking load according to Table 7.1.4.1.2 shall be maintained for a minimum of 30 s.

7.1.4.1.4 If the tensile loading capacity of the testing machine is insufficient to apply one breaking load for chain cables of large diameter, another equivalent testing method shall be agreed with the Register.

7.1.4.2 Retests.

7.1.4.2.1 Shall a breaking load test fail, a further test specimen may be taken from the same length of chain cable and tested. The test shall be considered successful if the requirements are then satisfied.

If the retest fails, the length of chain cable concerned shall be rejected. If the manufacturer so wishes, the remaining three lengths belonging to the unit test quantity may then be individually subjected to test at the breaking load. If one such test fails to meet the requirements, the entire unit test quantity is rejected.

7.1.4.2.2 Shall a proof load testing fail, the defective link (links) shall be replaced, a local heat treatment to be carried out on the new link (links) and the proof load testing shall be repeated. An investigation shall be made to identify the cause of the failure.

7.1.4.3 Tensile and impact testing of specimens cut out of a finished chain cable.

7.1.4.3.1 For Grade 2 and 3 chain cables, mechanical test specimens shall be taken from every four lengths according to the requirements of Table 7.1.4.3.1.

Table 7.1.4.3.1

Number of mechanical test specimens for finished chain cables and accessories

Steel grade	Manufacturing method	Condition of supply	Number of test specimens		
			Tensile test for base metal	Charpy V-notch impact test, *KV*	
				Base metal	Weldment
1	Flush-butt welded	AW N	Not required	Not required	Not required
2	Flush-butt welded	AW	1	2	3
		N	Not required	Not required	Not required
	Forged or cast	N	1	3 (Not required for chain cables)	3
3	Flush-butt welded	N NT QT	1	3	3

Steel grade	Manufacturing method	Condition of supply	Number of test specimens		
			Tensile test for base metal	Charpy V-notch impact test, *KV*	
				Base metal	Weldment
	Forged or cast	N NT QT	1	3	Not regulated
Symbols: AW = as welded; N = normalized; NT = normalized and tempered; QT = quenched and tempered.					

For forged and cast chain cables, the tests shall be carried out on the metal of each heat and charge (heat treatment). Sampling is effected according to 3.6.5 and retesting — according to 3.6.5.4. Tensile test transverse to the weld and an impact test with a notch along the weld for specimens taken from the weldment may be carried out. Testing and retesting are conducted in the presence of the Register representative.

7.1.4.3.2 For the purpose of test specimen preparation, provision shall be made for an additional link (or where the chain diameter is small, several links) in a length of chain cable. The additional link shall be manufactured by the same procedure as the specimen for breaking test in accordance with 7.1.4.1.3.

7.1.4.3.3 The test results shall comply with the requirements of Table 7.1.4.3.3 and shall be indicated in the certificate.

7.1.4.4 Chain cables shall be marked at both ends of each length, and the marking shall include certificate number, chain cable grade and the Register stamp. The arrangement of symbols comprising the marking shall be in accordance with Fig. 7.1.4.4.

7.1.5 Testing of accessories.

7.1.5.1 Proof and breaking load testing.

7.1.5.1.1 All chain cable accessories are subject to the tests below witnessed by the Register representative. To ensure the proper visual testing, of welded joints in particular, if present, the accessories shall be submitted for tests free from paint and anti-corrosion media.

Table 7.1.4.3.3

Mechanical properties of finished chain cables and accessories

Steel grade	Yield stress R_{eH}, min, N/mm^2	Tensile strength R_m, N/mm^2	Elongation A_5, min, %	Reduction in area Z, min, %	Charpy V-notch impact test[1], *KV*		
					Test temperature, °C	Impact energy value, min, J	
						Base metal	Weldment
1	Not required	Not required	Not required	Not required	Not required	Not required	Not required
2	295	490 — 690	22	Not required	0	27	27
3	410	690 min	17	40	0	60	50
					–20	35	27
[1] The impact tests for Grade 3 are carried out at a temperature of –20 °C.							

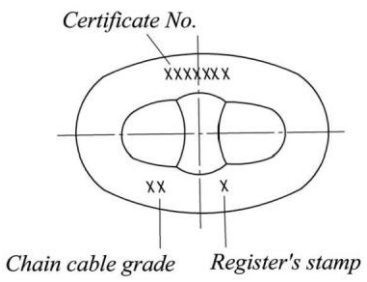

Fig. 7.1.4.4

7.1.5.1.2 All accessories are proof load tested in accordance with the above requirements and those in Table 7.1.4.1.2.

7.1.5.1.3 For breaking load test in accordance with Table 7.1.4.1.2, the accessories shall be submitted in batches.

A batch of shackles, swivels, swivel shackles, large links and end links shall comprise not more than 25 items and one consisting of Kenter shackles shall comprise 50 items of the same grade and size, which were manufactured from material of the same heat and heat treated in the same furnace charge.

Out of each batch, one item is subjected to the breaking load test and after testing, the use of the items according to the purpose is not permitted.

7.1.5.1.4 Breaking load test may be waived if:

the breaking load is confirmed by the positive results of the initial testing of the item when the manufacturer is approved by the Register; and

the results of mechanical testing in accordance with 7.1.5.2 are satisfactory for each batch; and

the parts are subjected to non-destructive testing in accordance with the procedure approved by the Register.

7.1.5.1.5 Notwithstanding the above, the items, which withstood the tests with a breaking load prescribed for the particular chain cable, may be used for the intended purpose, provided the following conditions were met in manufacturing of the items:

.1 the material, of which the items are made, meets more severe requirements than those prescribed for the chain cable, with which the items are expected to be used (e.g., material corresponds to Grade 3 where the required grade is 2);

.2 the material, of which the items are made, corresponds to the grade required for the item but the item has greater dimensions than those required and has withstood the tests with breaking load at least 1,4 times over the prescribed one.

7.1.5.2 Mechanical tests.

7.1.5.2.1 Unless otherwise stated, forgings and castings after heat treatment shall meet the requirements of Table 7.1.4.3.3. For sampling, castings and forgings of similar dimensions originating from the same heat treatment charge and the same heat of steel may be combined into batches. Testing and retesting shall be witnessed by the Register representative. From each manufacturing batch in one material grade, one tensile test specimen and the set of three-impact test specimens are taken in accordance with Table 7.1.4.3.1. Specimens are machined in accordance with 3.6.5; the retests are performed according to 3.6.5.4. Enlarged links and end links need not be tested, provided they are manufactured and heat treated together with the chain cable.

7.1.5.2.2 The results of the mechanical tests shall comply with the requirements of Table 7.1.4.3.3.

7.1.5.3 Each item of accessories shall be marked, and the marking shall include the certificate number, grade and the Register stamp.

7.1.6 Chafing chain for emergency towing arrangements.

7.1.6.1 General.

The present requirements apply to the chafing chain for chafing gear of emergency towing arrangements (ETA) with specified safe working load of 1000 kN (ETA1000) and 000 kN (ETA2000).

7.1.6.2 Chafing chains shall be manufactured only by the works recognized by the Register according to 7.1.1.2.

7.1.6.3 The materials used for the manufacture of the chafing chain shall meet the requirements of 7.1.2.

7.1.6.4 The chafing chain shall be designed, manufactured and tested in accordance with the requirements of 7.1.3 to 7.1.5.

7.1.6.5 One end of the chafing chain shall be suitable for connection to the strongpoint of a towed vessel, and the other end of the chafing chain shall be fitted with a pear-shaped open link allowing connection to a shackle (refer to Fig. 7.1.6.5).

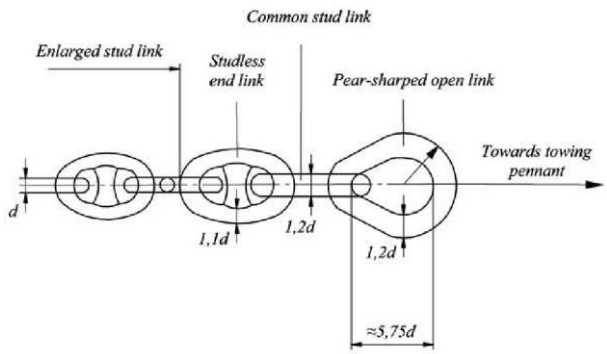

Fig. 7.1.6.5

7.1.6.6 The chafing chain for emergency towing arrangements shall be of Grade 2 or 3 and withstand a breaking load of at least twice the safe working load. For each type of ETA, the nominal diameter of a common link shall be in accordance with Table 7.1.6.6.

Table 7.1.6.6

Type of ETA	Nominal diameter of common link *d*, min, mm	
	Grade 2	Grade 3
ETA1000	62	52
ETA2000	90	76

7.1.7 Documents.

Chains complying with the above requirements shall have the Register certificates containing as a minimum the following data:

certificate number;
order number;
manufacturer's name;
grade;
chemical composition (including the total content of aluminium);
nominal diameter/weight;
proof/breaking load;
type of heat treatment;
manufacturing method;
chain marking;
length;
mechanical properties if needed.

If required, protocols of tests performed may be attached to the certificate.

7.2 MOORING CHAIN AND ACCESSORIES

7.2.1 General.

7.2.1.1 Scope of application.

The present requirements apply to the materials, design, manufacture and testing of mooring chain and accessories intended to be used for mobile offshore units and fixed offshore platforms.

This Chapter also includes requirements for chafing chain for single point moorings, FPSO and similar uses.

The accessories covered are common stud and studless links, connecting common links (splice links), enlarged links, end links, detachable connecting links (shackles), end shackles, subsea connectors, swivels and swivel shackles.

Studless link chain is normally deployed only once, being intended for long-term permanent mooring systems with pre-determined design life.

7.2.1.2 Chain grades.

Depending on the nominal tensile strength of the steels used for manufacture, chains and accessories shall be subdivided into five grades, i.e.: R3, R3S, R4, R4S and R5.

Manufacturers propriety specifications approved by the Register for R4S and R5 may vary the design conditions of a chain.

Each grade shall be individually approved. If it is demonstrated that the higher and lower grades are produced to the same manufacturing procedure using the same chemical composition and heat treatment, consideration will be given to qualification of a lower grade by a higher. The parameters applied during qualification shall not be modified during production under the Register technical supervision.

7.2.1.3 Recognition of chain manufacturers.

7.2.1.3.1 Mooring chains and accessories shall be manufactured only by works recognized in accordance with 1.3.1.2. For this purpose, tests shall be carried out, the scope of which shall include proof and breaking load tests, measurements and mechanical tests including fracture mechanics tests.

7.2.1.3.2 Manufacturers shall submit the information on the works and manufacturing processes in compliance with the requirements in Part III "Technical Supervision during Manufacture of Materials" of the Rules for Technical Supervision during Construction of Ships and Manufacture of Materials and Products for Ships, as well as the following documentation:

bar heating and bending including method, temperatures, temperature control and recording;

flash welding including current, force, time and dimensional variables as well as control and recording of parameters, maintenance procedure and programme for welding machine;

flash removal including method and inspection;

stud insertion method, for stud link chain;

heat treatment including furnace types, means of specifying, controlling and recording of temperature and chain speed and allowable limits, quenching bath and agitation, cooling method after exit;

proof and break loading including method/machine, means of horizontal support (if applicable), method of measurement and recording;

non-destructive testing methods;

the manufacturer's surface quality requirement of mooring chain accessories;

the procedure for removing and replacing defective links without heat treatment of the entire chain.

7.2.1.3.3 For initial approval *CTOD* tests shall be carried out on the particular mooring chain material. *CTOD* tests shall be performed in accordance with an agreed standard such as BS 7448, Part 1 and BS EN ISO 15653:2010.

The *CTOD* specimen shall be a standard 2×1 single edge notched bend specimen, test location as shown in Fig. 7.2.1.3.3. The notch of the *CTOD* specimen shall be located as close to the surface as practicable. The minimum cross section of the test specimen shall be 50×25 mm for chain diameters less than 120 mm, and 80×40 mm for diameters 120 mm and above. *CTOD* specimens shall be taken from both the side of the link containing the weld and from the opposite side. Three links shall be selected for testing. The tests shall be taken at –20 °C and the lowest *CTOD* of each set of 3 specimens shall meet the minimum values indicated in Table 7.2.1.3.3.

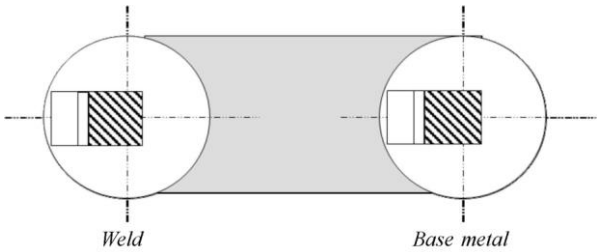

Fig. 7.2.1.3.3

Table 7.2.1.3.3

Chain grade	R3, mm		R3S, mm		R4, mm		R4S and R5, mm	
	Base metal	Weld metal	Base metal	Weld metal	Base metal	Weld metal	Base metal	Weld metal
Stud links	0,20	0,10	0,22	0,11	0,24	0,12	0,26	0,13
Studless links	0,20	0,14	0,22	0,15	0,24	0,16	0,26	0,17

7.2.1.3.4 Calibration of furnaces shall be verified by measurement and recording of a calibration specimen with dimensions equivalent to the maximum size of link manufactured. The manufacturer shall submit a procedure for furnace temperature surveys, which shall include the following requirements:

the temperature uniformity of furnaces shall be surveyed whenever approval of manufacturer is requested and at least annually during normal operating conditions;

furnaces shall be checked by conveying a monitoring link instrumented with two thermocouples through the furnaces at representative travel speed;

one thermocouple shall be attached to the surface of the straight part and one thermocouple shall be imbedded in a drilled hole located at the mid thickness position of the straight part of the calibration block;

the time-temperature curves shall show that the temperatures throughout the cross section and the soaking times are within specified limits as given in the heat treatment procedure.

7.2.1.3.5 For R4S and R5 chain and accessories, prior to approval, the manufacturer shall undertake experimental tests or have relevant supporting data to develop the chain and accessory material. The tests and data may include: fatigue tests, hot ductility tests (no internal flaws shall develop whilst bending in the link forming temperature range), welding parameter research, heat treatment study, strain age resistance, temper embrittlement study, stress corrosion cracking data and hydrogen embrittlement study, using slow strain specimens in hydrated environments. Reports indicating the results of experimental tests shall be submitted.

7.2.1.4 Approval of quality system at chain and accessory manufacturers.

Chain and accessory manufacturers shall have a documented and effective quality system approved by the Register. The provision of such system is required in addition to, and not in lieu of, the witnessing of tests by a surveyor as specified in 7.2.2 — 7.2.5.

7.2.1.5 Recognition of bar manufacturers. Rolled bar for chains.

7.2.1.5.1 Bar materials intended for chain and accessories shall be manufactured only by works approved by the Register and holding a Recognition Certificate for Manufacturer (refer to 1.3.2 and 3.6). The recognition is limited to a nominated supplier of bar material. If a chain manufacturer wishes to use material from a number of suppliers, separate recognition tests shall be carried out for each supplier.

7.2.1.5.2 The Recognition Certificate for Manufacturer may be issued to a rolled products supplier only after successful testing of the completed chain. Each grade shall be individually approved. If it is demonstrated that the higher and lower grades are produced to the same manufacturing procedure using the same chemical composition and heat treatment, consideration will be given to qualification of a lower grade by a higher. The parameters applied during qualification shall not be modified during production under the Register technical supervision. The Recognition Certificate for Manufacturer will normally be limited up to the maximum diameter equal to that of the chain diameter tested. The rolling reduction ratio shall be recorded in the Recognition Certificate for Manufacturer and shall be at least 5:1 for R3, R3S, R4, R4S and R5. The rolling reduction ratio used in production can be higher, but shall not be lower than that qualified.

7.2.1.5.3 The steelmaker shall submit a specification of the chemical composition of the bar material, which shall be approved by the Register and by the chain manufacturer. The specification shall be confirmed by the ladle analysis. For grade R4, R4S and R5 chain the steel shall contain a minimum of 0,20 % molybdenum.

7.2.1.5.4 A heat treatment sensitivity study simulating chain production conditions shall be applied in order to verify mechanical properties and establish limits for temperature and time combinations. All test details and results shall be submitted to the Register.

7.2.1.5.5 The bar manufacturer shall provide evidence that the manufacturing process produces material that is resistant to strain ageing, temper embrittlement and for R4, R4S and R5, hydrogen embrittlement. All test details and results shall be submitted to the Register.

7.2.1.6 Recognition of forgings and castings manufacturers. Accessories.

7.2.1.6.1 Forgings and castings manufacturers intended to supply finished or semi-finished accessories shall be recognized by the Register and shall hold the Recognition Certificate for Manufacturer (refer to 1.3.2 and 3.6). A description of manufacturing processes and process controls shall be submitted to the Register. The scope of recognition is determined by the manufacturer on agreement with the Register. The Recognition shall be limited to a nominated supplier of forged or cast material.

If an accessory manufacturer wishes to use material from a number of suppliers, a separate recognition shall be carried out for each supplier.

7.2.1.6.2 The Recognition Certificate for Manufacturer may be issued to a supplier of forgings and castings only after the successful testing of the completed accessory. Approval for a higher grade does not constitute approval of a lower grade. If it is demonstrated that the higher and lower grades are produced to the same manufacturing procedure using the same steel specification, supplier and heat treatment, lower grade may be approved by a higher.

The Recognition Certificate for Manufacturer shall normally be limited to the type of accessory and the designated mooring grade of material up to the maximum diameter or thickness equal to that of the completed accessory used for testing unless otherwise agreed by the Register. However, for the different accessories that have the same geometry, the tests for initial approval shall be carried out on the one having the lowest reduction ratio. Types of accessories, categories of materials as well as the maximum diameters of accessory pins to maximum diameters shall also be specified in the Recognition Certificate for Manufacturer.

7.2.1.6.3 Forgings.

Forgings shall have wrought microstructure and the minimum reduction ratio shall be 3 to 1. The forging reduction ratio, used in the qualification tests, from cast ingot/slab to forged component shall be recorded. The forging reduction ratio used in production can be higher, but

shall not be lower than that qualified. The degree of upsetting during qualification shall be recorded and maintained during production. Heat cycling during forging and reheating shall be monitored by the manufacturer and recorded in the forging documentation. The manufacturer shall have a maintenance procedure and schedule for dies and tooling which shall be submitted to the Register.

7.2.1.6.4 Forgings and castings manufacturers shall submit a specification of the chemical composition of the forged or cast material, which shall be approved by the Register. For Grade R4, R4S and R5 chain the steel shall contain a minimum of 0,20 % molybdenum.

7.2.1.6.5 Forgings and castings manufacturers shall provide evidence that the manufacturing process produces material that is resistant to strain ageing, temper embrittlement and for R4S and R5 grades, hydrogen embrittlement. A heat treatment sensitivity study simulating accessory production conditions shall be applied in order to verify mechanical properties and establish limits for temperature and time combinations (cooling after tempering shall be appropriate to avoid temper embrittlement).

All test details and results shall be submitted to the Register.

7.2.1.6.6 For initial approval *CTOD* tests shall be carried out. At least three *CTOD* tests shall be carried out in accordance with an agreed standard such as BS 7448, Part 1 & BS EN ISO 15653:2010. For rectangular accessories, the *CTOD* test piece shall be a standard 2×1 single edge notched bend specimen of thickness equal to full thickness of material to be tested. For circular geometries, the minimum cross section of the test specimen shall be 50×25 mm for accessory diameters less than 120 mm, and 80×40 mm for diameters 120 mm and above. The notch of the *CTOD* specimen shall be located as close to the surface as practicable. *CTOD* specimens shall be taken from both the side of the link containing the weld and from the opposite side. Three links shall be selected for testing, a total of six *CTOD* specimens. The tests shall be taken at –20 °C and the results submitted for review. The minimum value of each set of three specimens shall at least meet the requirements as indicated in Table 7.2.1.3.3 for the base metal.

The geometry of accessories can vary. Fig. 7.2.1.6.6 shows the *CTOD* location for circular and rectangular cross sections such as those of the D-shackle and accessories fabricated from rectangular sections. The orientation of the specimen shall consider the direction of the grain flow. Fig. 7.2.1.6.6, *b* shows two possible sampling positions for *CTOD* test specimens with notch orientation for rectangular type accessories. The grain flow is considered in the longitudinal direction X.

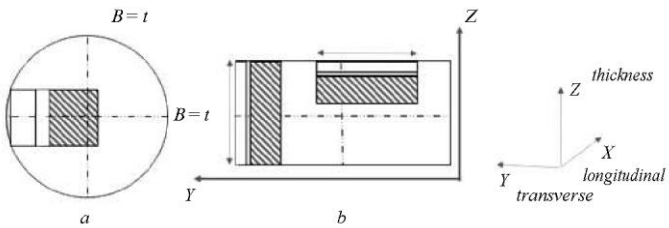

Fig. 7.2.1.6.6
Location of *CTOD* test specimens:
a — circular type accessory; *b* — rectangular type accessory

7.2.1.6.7 Calibration of furnaces shall be verified by measurement and recording of a calibration specimen with dimensions equivalent to the maximum size of link manufactured. Thermocouples shall be placed both on the surface and in a drilled hole located to the mid thickness position of the calibration block. The furnace dimensions shall be such as to allow the whole furnace charge to be uniformly heated to the necessary temperature. Temperature uniformity surveys of heat treatment furnaces for forged and cast components shall be carried out according to API Spec 6A/ISO 10423, Annex M or ASTM A991. The initial survey shall be

carried out with maximum load in the furnace. Subsequent surveys shall be carried out annually and may be carried out with no furnace charge.

The quench bath maximum temperature and the maximum heat treatment transfer times from furnace to quench shall be established and documented. During production the established quenching parameters shall be followed and records shall be maintained of bath temperatures and transfer times.

7.2.1.6.8 The requirements of 7.2.1.3.5 are applicable to Grades R4S and R5.

7.2.1.7 Approval of quality system at accessory manufacturers.

7.2.1.7.1 In accordance with the requirements of 7.2.1.4.

7.2.2 Materials.

7.2.2.1 Scope of application.

7.2.2.1.1 These requirements apply to rolled steels, forgings and castings used for the manufacture of mooring chain and accessories for mobile offshore drilling units and fixed offshore platforms.

7.2.2.2 Rolled steel bars.

7.2.2.2.1 Steel manufacture.

7.2.2.2.1.1 The steels shall be manufactured by basic oxygen, electric furnace or such other process approved by the Register. All steels shall be killed and fine grain treated. The austenitic grain size for R3, R3S and R4 Grades shall be 6 or finer (refer to ASTM E112, GOST 5639 or equivalent grain size index in accordance with ISO 643). Measurements for circular sections shall be taken at 1/3 radius.

7.2.2.2.1.2 Steel for bars intended for R4S and R5 grade chain shall be vacuum degassed. The austenitic grain size shall be 6 or finer (refer to ASTM E112, GOST 5639 or equivalent grain size index in accordance with ISO 643). Measurements for circular sections shall be taken at 1/3 radius.

7.2.2.2.1.3 For R4S and R5 chain the following information shall be supplied by the bar manufacturer to the mooring chain manufacturer and the results included in the chain documentation:

.1 each heat shall be examined for non-metallic inclusions. The level of micro inclusions shall be quantified and assessed in accordance with the national and international standards; inclusion levels shall be confirmed as acceptable for the final product;

.2 a sample from each heat shall be macro etched according to ASTM E381 or national equivalent, to be sure there is no injurious segregation or porosity;

.3 jominy hardenability data, according to ASTM A255 or national equivalent, shall be supplied with each heat.

7.2.2.2.2 Chemical composition.

7.2.2.2.2.1 For any tests under the Register technical supervision, the chemical composition of ladle samples of each heat shall be determined by the steel maker and shall meet the requirements of the Register-approved specification or a standard.

7.2.2.2.3 Mechanical properties.

7.2.2.2.3.1 Bars of the same nominal diameter are to be presented for test in batches of 50 t or fraction thereof from the same heat. Test specimens shall be taken from material heat treated in the same manner as intended for the finished chain.

7.2.2.2.3.2 Each batch of Grades R3S, R4, R4S and R5 shall be tested for hydrogen embrittlement. In case of continuous casting, test specimens representing both the beginning and the end of the charge shall be taken. In case of ingot casting, test samples representing two different ingots shall be taken.

7.2.2.2.3.2.1 Two tensile test specimens shall be taken from the central region of bar material which has been subjected to the heat treatment cycle intended to be used in production. A specimen with a diameter of 20 mm is preferred (consideration may be given to a diameter of 14 mm).

7.2.2.2.3.2.2 One of the specimens shall be tested within a maximum of 3 h after machining (for a 14 mm diameter specimen, the time limit is 1,5 h). Where this is not possible, the specimen shall be immediately cooled to –60 °C after machining and kept at that temperature for a maximum period of 5 days.

7.2.2.2.3.2.3 The second specimen shall be tested after baking at 250 °C for 4 h, alternatively 2 h for 14 mm diameter specimen.

7.2.2.2.3.2.4 A slow strain rate < 0,0003 s^{-1} shall be used during the entire test (this is approximately 10 min for the 20 mm diameter specimen). Tensile strength, elongation and reduction in area shall be reported.

7.2.2.2.3.2.5 The acceptance requirement for the test is

$$Z_1/Z_2 \geq 0{,}85$$

where Z_1 = reduction of area without baking;
Z_2 = reduction of area after baking.

If the requirement $Z_1/Z_2 \geq 0{,}85$ is not achieved, the bar material may be subjected to a hydrogen degassing treatment. New tests shall be performed after degassing.

7.2.2.2.3.3 For all grades, one tensile and three charpy V-notch specimens shall be taken from each sample selected. The test specimens shall be taken at approximately one-third radius below the surface, as shown in Fig. 7.2.2.2.3.3 and prepared in accordance with the Section 2 requirements. The results of all tests shall be in accordance with the appropriate requirements of Table 7.2.2.2.3.3.

Table 7.2.2.2.3.3

Mechanical properties of mooring chain and accessories

Grade	Yield stress, min, N/mm²	Tensile strength, min, N/mm²	Elongation, min, %	Reduction in area, min, %	Impact tests *KV*		
					Test temperature °C	Average energy, min, J	
						Base metal	Weld metal
R3	410	690	17	50	0	60	50
					–20	40	30
R3S	490	770	15	50	0	65	53
					–20	45	33
R4	580	860	12	50	–20	50	36
R4S	700	960	12	50	–20	56	40
R5	760	1000	12	50	–20	58	42

N o t e s : 1. Aim value of yield to tensile ratio: 0,92 max.
2. At the option of the Register the impact test of Grade R3 and R3S may be carried out at either 0 or –20 °C.
3. Reduction in area of cast steel shall be for Grades R3 and R3S: min 40 %; for R4, R4S and R5: min 35 per cent (refer to 7.2.2.4.4).
4. Aim maximum hardness for R4S is HB330 and R5 HB340.

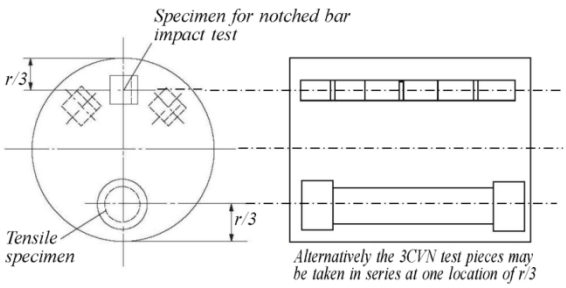

Fig. 7.2.2.2.3.3
Location of specimens. Steel bar, forging, casting

7.2.2.2.4 Dimensional tolerances.

7.2.2.2.4.1 The diameter and roundness shall be within the tolerances specified in Table 7.2.2.2.4.1, unless otherwise agreed.

Table 7.2.2.2.4.1

Nominal diameter, mm	Tolerance on diameter, mm	Tolerance on roundness (d_{max} — d_{min}), mm
less than 25	–0 + 1,0	0,6
25 — 35	–0 + 1,2	0,8
36 — 50	–0 + 1,6	1,1
51 — 80	–0 + 2,0	1,5
81 — 100	–0 + 2,6	1,95
101 — 120	–0 + 3,0	2,25
121 — 160	–0 + 4,0	3,00
161 — 210	–0 + 5,0	4,00

7.2.2.2.5 Non-destructive testing and repair.

7.2.2.2.5.1 Non-destructive testing shall be performed in accordance with the RS-agreed standards such as those indicated below or equivalent:

ASTM E1444 and ISO 9934 — magnetic particle testing (MT) of bars;

JIS Z2319 — magnetic leakage flux testing (MLFT);

ISO 15549 — eddy current testing (ET) of bars.

Non-destructive testing procedures, together with rejection/acceptance criteria shall be submitted to the Register for agreement.

7.2.2.2.5.2 Manufacturers shall prepare written procedures for non-destructive testing. Non-destructive testing personnel shall be qualified and certified according to ISO 9712, ACCP or equivalent. Personnel qualification to an employer or responsible agency based qualification scheme as SNT-TC-1A may be accepted if the employer's written practice is reviewed and found acceptable and the level III is ASNT level III, ISO 9712 level III or ACCP professional level III and certified in the applicable method. Nondestructive testing operators shall be qualified to at least level II.

7.2.2.2.5.3 The manufacturer shall ensure that 100 % of bar material intended for either chain or fittings is subjected to ultrasonic testing at an appropriate stage of the manufacture to procedures approved by the Register and to the acceptance criteria required. The bars shall be free of pipe, cracks and flakes. If the end length of the delivered bars is not subjected to ultrasonic testing then it shall be agreed between the bar supplier and the chain manufacturer of what length of bar shall be removed from the ends. The details shall be documented in the approval of each bar supplier. Phased array ultrasonic testing procedures may be applied after its approval by the Register.

7.2.2.2.5.4 100 % of the bar material shall be tested by magnetic particle (MT) or eddy current (ET) or Magnetic magnetic leakage flux testing (MLFT) methods. The bars shall be free of injurious surface imperfections such as seams, laps and rolled-in mill scale. Provided that their depth is not greater than 1 % of the bar diameter, longitudinal defects may be removed by grinding and blending to a smooth contour.

All bars supplied in a machined (peeled) condition shall be 100 % visually inspected. The Register shall also require 10 % to be inspected with magnetic particle testing (MT) or eddy current testing (ET) or magnetic leakage flux testing (MLFT), for longitudinal imperfections. The maximum depth of peeling shall be agreed and documented in the approval of each supplier by the Register.

7.2.2.2.5.5 The frequency of non-destructive testing may be reduced provided it is verified by statistical means that the required quality is consistently achieved.

7.2.2.2.5.6 Weld repair of bars is not permitted.

7.2.2.2.6 Marking.

7.2.2.2.6.1 Each bar shall be stamped with the steel grade designation and the charge number (or a code indicating the charge number) on one of the end surfaces.

7.2.2.3 Forged steel.

7.2.2.3.1 Manufacture.

7.2.2.3.1.1 Forged steels used for the manufacture of accessories shall be in compliance with the requirements of the Register-approved documentation with specifications and test reports. Steel shall be manufactured by basic oxygen, electric furnace or such other process as may be specially approved by the Register. All steel shall be killed and fine grain treated. The austenitic grain size shall be 6 or finer (refer to ASTM E112, GOST 5639 or equivalent grain size index in accordance with ISO 643). Measurements for circular sections shall be taken at 1/3 radius. Measurements for non-circular sections shall be taken at 1/4*t*.

7.2.2.3.1.2 Steel for forgings intended for R4S and R5 chain shall be vacuum degassed. The austenitic grain size shall be 6 or finer (refer to ASTM E112, GOST 5639 or equivalent grain size index in accordance with ISO 643). Measurements for circular sections shall be taken at 1/3 radius. Measurements for non-circular sections shall be taken at 1/4*t*.

7.2.2.3.1.3 For steel intended for R4S and R5 accessories the following information shall be supplied by the steel manufacturer to the accessory manufacturer and the results included in the accessory documentation:

.1 each heat shall be examined for non-metallic inclusions. The level of micro inclusions shall be quantified and assessed in accordance with the agreed national and international standards; to be sure inclusion levels are acceptable for the final product;

.2 a sample from each heat shall be macroetched according to ASTM E381 or national equivalent, to be sure there is no injurious segregation or porosity;

.3 hardenability data, according to ASTM A255 or national equivalent, shall be provided with each heat.

The results of the above tests are to be included in the accessory documentation.

7.2.2.3.2 Chemical composition (refer to 7.2.2.2.2).

7.2.2.3.3 Heat treatment.

7.2.2.3.3.1 Finished forgings shall be properly heat treated in compliance with specification submitted and approved.

7.2.2.3.4 Mechanical properties.

7.2.2.3.4.1 The forgings shall comply with the mechanical properties given in Table 7.2.2.2.3.3 when properly heat treated.

7.2.2.3.5 Mechanical tests.

7.2.2.3.5.1 For test sampling, forgings of similar dimensions (diameters do not differ by more than 25 mm) originating from the same heat treatment charge and the same heat of steel shall be combined into one test unit. From each test unit one tensile and three impact test specimens shall be taken and tested.

The specimens shall be located according to Fig. 7.2.2.2.3.3 and the requirements of Section 2.

7.2.2.3.5.2 Each heat of Grades R3S and R4 shall be tested for hydrogen embrittlement. In case of continuous casting, test samples representing both the beginning and the end of the charge shall be taken. In case of ingot casting, test samples representing two different ingots shall be taken.

7.2.2.3.5.2.1 Two tensile test specimens shall be taken from the central region of forged material which has been subjected to the heat treatment cycle intended to be used in production. A specimen with a diameter of 20 mm is preferred (use of specimens with a diameter of 14 mm is permitted upon agreement with the Register).

7.2.2.3.5.2.2 One of the specimens shall be tested within a maximum of 3 h after machining (for a 14 mm diameter specimen, the time limit is 1,5 h). Where this is not possible, the specimen

shall be immediately cooled to –60 °C after machining and kept at that temperature for a maximum period of 5 days.

7.2.2.3.5.2.3 The second specimen shall be tested after baking at 250 °C for 4 h, alternatively 2 h for 14 mm diameter specimen.

7.2.2.3.5.2.4 A slow strain rate (a relative elongation to design length) < 0,0003 s^{-1} shall be used during the entire test, until fracture occurs (this is approximately 10 min for the 20 mm diameter specimen).

7.2.2.3.5.2.5 When determining R3S and R4 grade chains' susceptibility to hydrogen embrittlement, $Z_1/Z_2 \geq 0{,}85$, where $Z1$ is reduction of area without baking, Z_2 is reduction of area after baking.

If the requirement $Z_1/Z_2 \geq 0{,}85$ is not achieved, the bar material may be subjected to a hydrogen degassing treatment after agreement with the Register. New tests shall be performed after degassing.

7.2.2.3.6 Ultrasonic testing.

7.2.2.3.6.1 Non-destructive testing shall be performed in accordance with the standards recognized by the Register such as those indicated below:

EN 10228-1, ASTM A275 and ISO 9934 — magnetic particle testing (MT) of forgings;

EN 10228-3, ASTM A388 and ISO 13588 — ultrasonic testing (UT) of forgings.

7.2.2.3.6.2 Manufacturers shall submit to the Register written procedures for non-destructive testing. Non-destructive testing personnel shall be qualified and certified according to ISO 9712, ACCP or equivalent. Personnel qualification to an employer or responsible agency based qualification scheme as SNT-TC-1A may be accepted if the employer's written practice is reviewed and found acceptable and the level III is ASNT level III, ISO 9712 level III or ACCP professional level III and certified in the applicable method. NDT operators shall be qualified to at least level II.

7.2.2.3.6.3 The forgings shall be subjected to 100 % ultrasonic testing and in compliance with the specification approved by the Register.

7.2.2.3.6.4 Defects on non-machined surfaces may be removed by grinding to a depth of 5 % of the nominal diameter. Grinding is not permitted on machined surfaces, except for slight inspection grinding on plane surfaces to a maximum depth of 0,8 mm in order to investigate spurious indications.

7.2.2.3.6.5 Welding repairs are not permitted.

7.2.2.3.7 Marking (refer to 7.2.2.2.6).

7.2.2.4 Cast steel.

7.2.2.4.1 Manufacture.

7.2.2.4.1.1 Cast steel used for the manufacture of accessories shall be in compliance with the requirements of the Register-approved documentation with specifications and test reports. Steel shall be manufactured by basic oxygen, electric furnace or such other process approved by the Register. All steel shall be killed and fine grain treated. The austenitic grain size for R3, R3S and R4 grades shall be 6 or finer (refer to ASTM E112, GOST 5639 or equivalent grain size index in accordance to ISO 643). Measurements for circular sections shall be taken at 1/3 radius. Measurements for non-circular sections are to be taken at 1/4*t*.

7.2.2.4.1.2 Steel for castings intended for R4S and R5 grade chain accessories shall be vacuum degassed. The austenitic grain size shall be 6 or finer (refer to ASTM E112, GOST 5639 or equivalent grain size index in accordance to ISO 643). Measurements for circular sections shall be taken at 1/3 radius. Measurements for non-circular sections shall be taken at 1/4*t*.

7.2.2.4.1.3 For steel intended for R4S and R5 accessories the following information shall be supplied by the steel manufacturer to the accessory manufacturer and the results included in the accessory documentation:

.1 each heat shall be examined for non-metallic inclusions. The level of micro inclusions shall be quantified and assessed in accordance to the agreed national and international standards; to be sure inclusion levels are acceptable for the final product;

.2 a sample from each heat shall be macro etched according to ASTM E381 or national equivalent, to be sure there is no injurious segregation or porosity;

.3 hardenability data, according to ASTM A255 or national equivalent, shall be supplied with each heat.

7.2.2.4.2 Chemical composition (refer to 7.2.2.2.2).

7.2.2.4.3 Heat treatment.

All castings shall be properly heat treated in comp-liance with specifications submitted and approved.

7.2.2.4.4 Mechanical properties.

7.2.2.4.4.1 The castings after heat treatment shall comply with the mechanical properties given in Table 7.2.2.3.3. The acceptance requirement for reduction in area is, however, reduced to 40 % for Grades R3 and R3S, and 35 % for Grades R4, R4S and R5.

7.2.2.4.5 Mechanical tests.

7.2.2.4.5.1 For test sampling, castings of similar dimensions originating from the same heat treatment charge and the same heat of steel shall be combined into one test unit. From each test unit one tensile and three impact test specimens shall be taken and tested.

The specimens shall be located according to Fig. 7.2.2.2.3.3 and the requirements of Section 2.

7.2.2.4.6 Non-destructive testing and repair.

7.2.2.4.6.1 Non-destructive testing shall be performed in accordance with the RS-agreed standards Register such as those indicated below, or equivalent:

EN 10228-1, ASTM A275 and ISO 9934 — magnetic particle testing (MT) of castings;

EN 10228-3, ASTM A388 and ISO 13588 — ultrasonic testing (UT) of castings.

7.2.2.4.6.2 Manufacturer shall submit to the Register written procedures for non-destructive testing. Non-destructive testing personnel shall be qualified and certified according to ISO 9712, ACCP or equivalent. Personnel qualification to an employer or responsible agency based qualification scheme as SNT-TC-1A may be accepted if the employer's written practice is reviewed and found acceptable and the level III is ASNT level III, ISO 9712 level III or ACCP professional level III and certified in the applicable method. Non-destructive testing operators shall be qualified to at least level II.

7.2.2.4.6.3 The castings shall be subjected to 100 % ultrasonic testing and in compliance with the specification approved by the Register.

7.2.2.4.6.4 Defects on non-machined surfaces may be removed by grinding to a depth of 5 % of the nominal diameter. Grinding is not permitted on machined surfaces, except for slight inspection grinding on plane surfaces to a maximum depth of 0,8 mm in order to investigate spurious indications.

7.2.2.4.6.5 Where the repair entails removal of more than 5 % of the diameter or thickness, the defective area shall be repaired by welding. The excavations shall be suitably shaped to allow good access for welding. The resulting grooves shall be subsequently ground smooth and complete elimination of the defective material shall be verified by non-destructive testing.

7.2.2.4.6.6 Weld repairs are classified as major or minor. A weld repair is considered major when the depth of the groove prepared for welding exceeds 25 % of the diameter or thickness or 25 mm, whichever is smaller. All other weld repairs are considered minor.

7.2.2.4.6.7 Weld repairs may be conducted only after the approval by the Register. Reports submitted to the Register shall be accompanied by sketches or photographs showing the extent and positions of the repairs. A grain refining heat treatment shall be given to the whole casting prior to repairs. A post weld heat treatment of post-repair castings shall be carried out.

7.2.2.4.6.8 Minor and major weld repairs by the manufacturer shall be recorded on sketches and photographs showing the extent and positions of the repairs (before and after) and submitted to the Register.

7.2.2.4.6.9 All weld repairs shall be done by qualified welders using qualified procedures. Welders shall be qualified according to ISO 9606, ASME IX, ASTM A488 or equivalent. Procedures shall be qualified according to ISO 15614, ASME IX, ASTM A488 or equivalent with the following additional requirements: Charpy V notch impact tests with notch locations in weld metal, fusion line and heat affected zone +2 mm and +5 mm from fusion line, respectively. Test results shall meet the requirements of the Rules specified for the base metal.

7.2.2.4.7 Marking (refer to 7.2.2.2.6).

7.2.2.5 Materials for studs.

7.2.2.5.1 Studs intended for stud link chain cable shall be made of steel corresponding to that of the chain or in compliance with specification submitted and approved by the Register. In general, the carbon content shall not exceed 0,25 % if the studs shall be welded in place.

7.2.3 Design and chain manufacture.

7.2.3.1 Design.

7.2.3.1.1 Drawings accompanied by design calculations, giving the detailed design of chain and accessories made by, or supplied through, the chain manufacturer shall be submitted to the Register for approval. Typical designs are given in ISO 1704. For studless chain the shape and proportions shall comply with the requirements of this Section. Application of studless chains and accesories of designs other than specified in thist Section is considered by the Register to be application of new or non-standard designs of chains, shackles or fittings. For application of the latter results of fatigue and corrosion fatigue tests shall be submitted. Documentation specifying the characteristics of the chain and fittings shall be approved by the Register.

7.2.3.1.2 In addition, for stud link chain, drawings showing the detailed design of the stud shall be submitted for information. The stud shall give an impression in the chain link which is sufficiently deep to secure the position of the stud, but the combined effect of shape and depth of the impression shall not cause any harmful notch effect or stress concentration in the chain link.

7.2.3.1.3 Machining of Kenter shackles shall result in a fillet radius minimum 3 % of a nominal link diameter.

7.2.3.2 Chain cable manufacturing process.

7.2.3.2.1 General.

7.2.3.2.1.1 Offshore mooring chains shall be manufactured in continuous lengths by flash butt welding and shall be heat treated in a continuous furnace. Batch heat treatment is not permitted, except in special circumstances where short lengths of chain are delivered, such as chafing chain.

7.2.3.2.1.2 The use of joining shackles to replace defective links is subject to the written approval of the end purchaser in terms of the number and type permitted. The use of connecting common links is restricted to 3 links in each 100 m of chain.

7.2.3.2.2 Chain cable manufacturing process records.

7.2.3.2.2.1 Records of bar heating, flash welding and heat treatment shall be made available for inspection by the Register.

7.2.3.2.3 Bar heating.

7.2.3.2.3.1 Bars for links shall be heated by electric resistance, induction or in a furnace.

7.2.3.2.3.2 For electric resistance heating, the heating phase shall be controlled by an optical heat sensor. The controller shall be checked at least once every 8 h and records made.

7.2.3.2.3.3 For furnace heating, the heat shall be controlled and the temperature continuously recorded using thermocouples in close proximity to the bars. The controls shall be checked at least once every 8 h and records made.

7.2.3.2.4 Flash welding of chain cable.

7.2.3.2.4.1 The following welding parameters shall be controlled during welding of each link:

platen motion;
current as a function of time;
hydraulic pressure.

7.2.3.2.4.2 The controls shall be checked at least every 4 h and records made.

7.2.3.2.5 Heat treatment of chain cable.

7.2.3.2.5.1 Chain shall be austenitized, above the upper transformation temperature, at a combination of temperature and time within the limits established by the manufacturer.

7.2.3.2.5.2 When applicable, chain shall be tempered at a combination of temperature and time within the limits established by the manufacturer. Cooling after tempering shall be appropriate to avoid temper embrittlement.

7.2.3.2.5.3 Temperature and time or temperature and chain speed shall be controlled and continuously recorded.

7.2.3.2.5.4 Grain determination shall be made for the final product. The austenitic grain size for R3, R3S, R4, R4S and R5 shall be 6 or finer (refer to ASTM E112, GOST 5639 or equivalent grain size index in accordance to ISO 643). Measurements for circular sections shall be taken at surface, 1/3 radius and centre for the base material, HAZ and weld.

7.2.3.2.6 Mechanical properties.

7.2.3.2.6.1 The mechanical properties of finished chain and accessories shall be in accordance with Table 7.2.2.2.3.3. For the location of test specimens refer to Fig. 7.2.3.2.6.1.

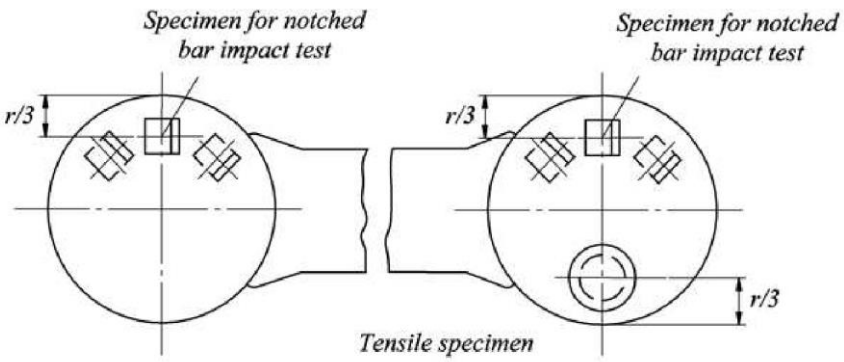

Fig. 7.2.3.2.6.1
Sampling of chain

7.2.3.2.7 Proof and breaking test loads.

7.2.3.2.7.1 Chains and accessories shall withstand the proof and break test loads given in Table 7.2.3.2.7.1.

7.2.3.2.8 Non-destructive testing.

7.2.3.2.8.1 All finished chains shall have a proper quality to be ensured by the manufacturer. Each link shall be subjected to non-destructive testing in compliance with 7.2.4.5 using the Register-approved procedures.

7.2.3.2.9 Dimensions and dimensional tolerances.

7.2.3.2.9.1 The shape and proportion of links and accessories shall conform to ISO 1704:1991 or the relevant documentation approved by the Register.

7.2.3.2.9.2 The following tolerances are applicable to links:

.1 the negative tolerance on the nominal diameter measured at the crown:
up to 40 mm nominal diameter — 1 mm;
over 40 up to 84 mm nominal diameter — 2 mm;
over 84 up to 122 mm nominal diameter — 3 mm;
over 122 up to 152 mm nominal diameter — 4 mm;

Table 7.2.3.2.7.1

Formulas for proof and break test loads, weight and length over 5 links

Test load, kN	Grade R3 stud link	Grade R3S stud link	Grade R4 stud link	Grade R4S stud link	Grade R5 stud link
Proof	$0{,}0148d^2$	$0{,}0180d^2$	$0{,}0216d^2$	$0{,}0240d^2$	$0{,}0251d^2$
	$(44–0{,}08d)$	$(44–0{,}08d)$	$(44–0{,}08d)$	$(44–0{,}08d)$	$(44–0{,}08d)$
Break	$0{,}0223d^2$	$0{,}0249d^2$	$0{,}0274d^2$	$0{,}0304d^2$	$0{,}0320d^2$
	$(44–0{,}08d)$	$(44–0{,}08d)$	$(44–0{,}08d)$	$(44–,08d)$	$(44–0{,}08d)$
Test load, kN	Grade R3 studless	Grade R3S studless	Grade R4 studless	Grade R4S studless	Grade R5 studless
Proof	$0{,}0148d^2$	$0{,}0174d^2$	$0{,}0192d^2$	$0{,}0213d^2$	$0{,}0223d^2$
	$(44–0{,}08d)$	$(44–0{,}08d)$	$(44–0{,}08d)$	$(44–0{,}08d)$	$(44–0{,}08d)$
Break	$0{,}0223d^2$	$0{,}0249d^2$	$0{,}0274d^2$	$0{,}0304d^2$	$0{,}0320d^2$
	$(44–0{,}08d)$	$(44–0{,}08d)$	$(44–0{,}08d)$	$(44–0{,}08d)$	$(44–0{,}08d)$
Chain weight, kg/m	Stud link = $0{,}0219d^2$				
Chain weight, kg/m	Studless chain Weight calculations for each design shall be submitted				
Pitch length	Five link measure				
Minimum	$22d$				
Maximum	$22{,}55d$				

over 152 up to 184 mm nominal diameter — 6 mm;
over 184 up to 222 mm nominal diameter — 7,5 mm.

N o t e . The cross sectional area at the crown shall have no negative tolerance. For diameters of 20 mm or greater, the plus tolerance may be up to 5 % of the nominal diameter. For diameters less than 20 mm the plus tolerance shall be agreed with the Register.

The cross sectional area at the crown shall be calculated using the average of the diameters with negative tolerance and plus tolerance, measurements shall be taken from at least 2 locations approximately 90° apart.

.2 diameter measured at locations other than the crown:

the diameter shall have no negative tolerance;

the plus tolerance may be up to 5 % of the nominal diameter except at the butt weld where it shall be in accordance to manufacturer's specification, which shall be agreed with the Register.

For diameters less than 20 mm, the plus tolerance shall be agreed with the Register during survey.

.3 the allowable manufacturing tolerance on a length of five links shall be +2,5 %, but shall not be negative;

.4 all other dimensions are subject to a manufacturing tolerance of ±2,5 %, provided always that all parts fit together properly;

.5 the tolerances for stud link and studless common links shall be measured in accordance with Tables and Figs. 7.2.3.2.9.2-1 and 7.2.3.2.9.2-2 accordingly;

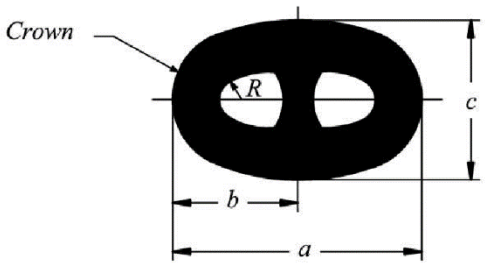

Fig. 7.2.3.2.9.2-1
Stud link — the internal link radii *R and* external radii shall be uniform

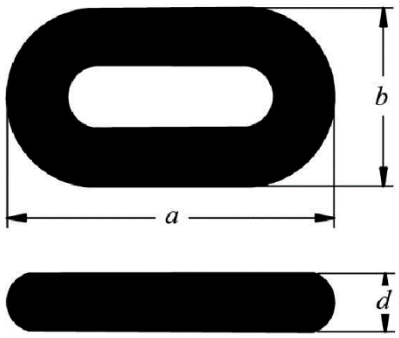

Fig. 7.2.3.2.9.2-2
Studless — the internal link radii *R and* external radii shall be uniform

Table 7.2.3.2.9.2-1

Proportions dimensions and tolerances for stud links

Dimensions — refer to Figs. 7.2.3.2.9.2-1	Parameters	Nominal dimension	Minus tolerance	Plus tolerance
a	Link length	6*d*	0,15*d*	0,15*d*
b	Link half length	*a**/2	0,1*d*	0,1*d*
c	Link width	3,6*d*	0,09*d*	0,09*d*
e	Stud angular misalignment	0 degrees	4 degrees	4 degrees
R	Inner radius	0,65*d*	0	–
Note. *d* = nominal diameter of chain, *a** = actual link length.				

Table 7.2.3.2.9.2-2

Proportions dimensions and tolerances for studless links

Dimensions — refer to Fig. 7.2.3.2.9.2-2	Parameters	Nominal dimension	Minus tolerance	Plus tolerance
a	Link length	6*d*	0,15*d*	0,15*d*
b	Link width	3,35*d*	0,09*d*	0,09*d*
R	Inner radius	0,60*d*	0	–
Note. Other dimension ratios are allowed in accordance with national or international standards, the application of which shall be agreed with the Register.				

.6 for stud link chains, the studs shall be located in the links centrally and at right angles to the sides of the link. The tolerances are determined in compliance with Table 7.2.3.2.9.2-1 and Fig. 7.2.3.2.9.2-1 provided that the stud fits snugly and its ends lie flush against the inside of the link.

7.2.3.2.10 Stud link chain — welding of studs.

7.2.3.2.10.1 A welded stud may be accepted for grade R3 and R3S chains. Welding of studs in Grades R4, R4S and R5 chain is not permitted unless approved by the Register.

7.2.3.2.10.2 Where studs are welded into the links this shall be completed before the chain is heat treated.

7.2.3.2.10.3 The stud ends shall be a good fit inside the link and the weld shall be confined to the stud end opposite to the flash butt weld. The full periphery of the stud end shall be welded unless otherwise approved.

7.2.3.2.10.4 Welding of studs both ends is not permitted unless approved by the Register.

7.2.3.2.10.5 The welds shall be made by qualified welders using the Register-approved procedure and low-hydrogen approved consumables.

7.2.3.2.10.6 The size of the fillet weld shall as a minimum be as per API Specification 2F.

7.2.3.2.10.7 The welds shall be of good quality and free from defects such as cracks, lack of fusion, gross porosity and undercuts exceeding 1 mm.

7.2.3.2.10.8 All stud welds shall be visually tested. At least 10 % of all stud welds within each length of chain shall be examined by dye penetrant or magnetic particles after proof testing. If unacceptable defects are found, all stud welds in that length shall be examined.

7.2.3.2.11 Connecting common links (splice links).

7.2.3.2.11.1 Single links to substitute for test links or defective links without the necessity for reheat treatment of the whole length shall be made in accordance with the Register-approved procedure. Separate approvals are required for each grade of chain and the tests shall be made on the maximum size of chain for which approval is sought.

7.2.3.2.11.2 Manufacture and heat treatment of connecting common link shall not affect the properties of the adjoining links. The temperature reached by these links shall nowhere exceed 250 °C.

7.2.3.2.11.3 Each link shall be subjected to the appropriate proof load and non-destructive testing as detailed in Table 7.2.3.2.7.1 and in 7.2.4.5 respectively. A second link shall be made identical to the connecting common link; the link shall be tested according to 7.2.4.4 and 7.2.4.5.

7.2.3.2.11.4 Each connecting common link shall be marked either; on the stud for stud link chain or, on the outer straight length on the side opposite the flash butt weld for studless chain. This marking shall be in accordance with 7.2.4.7 plus a unique number for the link. The adjoining links shall also be marked on the studs or straight length as above.

7.2.4 Testing of finished chain.

7.2.4.1 General.

7.2.4.1.1 The present requirements apply to, but are not limited to common stud and studless links, end links, enlarged end links and connecting common links (splice links).

7.2.4.1.2 All chain shall be subjected to proof load tests, sample break load tests and sample mechanical tests after final heat treatment in the presence of the Register representative. Where the manufacturer has a procedure to record proof loads and the Register representative is satisfied with the adequacy of the recording system, he does not need to witness all proof load tests. The Register representative shall satisfy himself that the testing machines are calibrated and maintained in a satisfactory condition. Prior to inspection the chain shall be free from scale, paint or other coating and shall have a suitably prepared surface as per the applied non-destructive testing standard. The chain shall be sand- or shot blast to meet this requirement.

7.2.4.2 Proof and break load tests.

7.2.4.2.1 The entire length of chain shall withstand the proof load specified in Table 7.2.3.2.7.1 without fracture and shall not crack in the flash weld. The load applied shall not exceed the proof load by more than 10 % when stretching the chain. Where plastic straining is used to set studs, the applied load shall not be greater than that qualified in the initial chain tests during recognition of the manufacturer.

7.2.4.2.2 A break-test specimen consisting of at least 3 links shall be either taken from the chain or produced at the same time and in the same manner as the chain. The test frequency shall be based on tests at sampling intervals according to Table 7.2.4.2.2 provided that every cast is represented. Each specimen shall be capable of withstanding the break load specified without fracture and shall not crack in the flash weld. It shall be considered acceptable if the specimen is loaded to the specified value and maintained at that load for 30 s.

Table 7.2.4.2.2

Frequency of break and mechanical tests

Nominal chain diameter, mm	Maximum sampling interval, m
≤ 48	91
49 — 60	110
61 — 73	131
74 — 85	152
86 — 98	175
99 — 111	198
112 — 124	222
125 — 137	250
138 — 149	274
150 — 162	297
163 — 175	322
176 — 186	346
187 — 198	370
199 — 210	395
211 — 222	420

7.2.4.2.3 For chain diameters over 100 mm, alternative break-test proposals to the above break-test may be considered whereby a one link specimen is used. Alternatives shall be approved by the Register, every heat shall be represented, the test frequency shall be in accordance with Table 7.2.4.2.2, and it shall be demonstrated and proven that the alternative test represents an equivalent load application to the three link test.

7.2.4.2.4 If the loading capacity of the testing machine is insufficient, an alternative load testing machine shall be used that does have sufficient capacity (e.g. two loading machines in parallel), provided the testing and calibration procedure are agreed with the Register.

7.2.4.3 Dimensions and dimensional tolerances.

7.2.4.3.1 After proof load testing measurements shall be taken on at least 5 % of the links in accordance with 7.2.3.2.7.1.

7.2.4.3.2 The entire chain shall be checked for the length, five links at a time. By the five link check the first five links shall be measured. From the next set of five links, at least two links from the previous five links set shall be included. This procedure shall be followed for the entire chain length. The measurements shall be taken preferably while the chain is loaded to 5 to 10 % of the minimum proof load. The tolerances for the 5 link measurements are indicated in Table 7.2.3.2.7.1, any deviations from the 5 link tolerances shall be agreed with the Register. The links held in the end blocks may be excluded from this measurement.

7.2.4.3.3 Chain dimensions shall be recorded and the information retained on file.

7.2.4.4 Mechanical tests.

7.2.4.4.1 Links of samples detached from finished, heat treated chain shall be sectioned for determination of mechanical properties. A test unit shall consist of one tensile and nine impact specimens:

the tensile specimen shall be taken in the side opposite the flash weld;

three impact specimens shall be taken across the unwelded side;

three impact specimens shall be taken from the bend region;

three impact specimens shall be taken across the flash weld with the notch centred in the middle.

7.2.4.4.2 The test frequency shall be in accordance with Table 7.2.4.2.2 provided that every cast is represented. Mechanical properties shall meet the requirements of Table 7.2.2.2.3.3.

7.2.4.4.3 The frequency of impact testing in the bend may be reduced at the discretion of the Register provided it is verified by statistical means that the required toughness is consistently achieved.

7.2.4.4.4 Hardness tests shall be carried out on finished chain. The frequency and locations shall be agreed with the Register. The recorded values are for information only and used as an additional check to verify that the heat treatment process has been stable during the chain production.

7.2.4.5 Non-destructive testing.

7.2.4.5.1 All surfaces of every link shall be visually tested and measured, sizes and mutual mobility of elements and products shall be checked. Burrs, irregularities and rough edges shall be contour ground. Links shall be free from mill defects, surface cracks, dents and cuts, especially in the vicinity where gripped by clamping dies during flash welding. Studs shall be securely fastened. Chain shall be positioned in order to have good access to all surfaces. In order to allow optimal access to the surface area it is recommended that chain be hung in the vertical position, however access to inspect the interlink area may only be possible with the chain in the horizontal position.

7.2.4.5.2 Non-destructive testing shall be performed in accordance with agreed standards and procedures, together with the Register-approved acceptance/rejection criteria. Manufacturers shall submit to the Register written procedures for non-destructive testing. Non-destructive testing personnel shall be qualified and certified according to ISO 9712, ACCP or equivalent. Personnel qualification to an employer or responsible agency based qualification scheme as SNT-TC-1A may be accepted if the employer's written practice is reviewed and found acceptable and the level III is ASNT level III, ISO 9712 level III or ACCP professional level III and certified in the applicable method. Non-destructive testing operators shall be qualified to at least level II.

7.2.4.5.3 Magnetic particle testing approved by the Register shall be employed to examine the flash welded area including the area gripped by the clamping dies. The relevant procedures and equipment shall be agreed with the Register. Additionally, 10 % of links shall be tested on all accessible surfaces. Link surfaces and the surface at the flash weld shall be free from cracks, lack of fusion and gross porosity. Testing shall be performed in accordance with ASTM E709 or another agreed standard (e.g. ISO 9934) using wet continuous fluorescent magnetization technique.

Links shall be free from relevant linear indications exceeding 1,6 mm in transverse direction, relevant linear indications exceeding 3,2 mm in longitudinal direction and relevant non-linear indications exceeding 4,8 mm.

7.2.4.5.4 Ultrasonics shall be employed to examine the flash weld fusion. Procedures used shall be submitted to the Register for approval. Procedures and equipment shall be used in accordance with the approved documentation. On-site calibration standards for chain configurations shall be approved. Frequency of examination shall be every link.

The flash weld shall be free from defects causing ultrasonic back reflections equal to or greater than the calibration standard. The flash butt welds shall be ultrasonic tested (UT) in accordance with ASTM E587 or another agreed standard using single probe, angle-beam shear waves in the range from 45 to 70°. Single probe technique has limitations as far as testing of the central region is concerned and the flash weld imperfections such as flat spots may have poor reflectivity. Where it is deemed necessary, detectability of imperfections may need to be carried out by using a tandem technique, TOFD or phased array.

7.2.4.5.5 Stud welds, if used, shall be visually inspected. The toes of the fillets shall have a smooth transition to the link with no undercuts exceeding 1,0 mm. Additionally, at least 10 % of the stud welds distributed through the length shall be dye penetrant tested according to ASTM E1417 or magnetic particle tested according to ASTM E1444 or equivalent. Cracks, lack of fusion or gross porosity are not acceptable. If defects are found, testing shall be extended to all stud welds in that length.

7.2.4.6 Retest and repair criteria.

7.2.4.6.1 If the length over 5 links is short, the chain may be stretched by loading above the proof test load specified provided that the applied load is not greater than that approved by

the Register for the given chain and that only random lengths of the chain need stretching. If the length exceeds the specified tolerance, the over length chain links shall be cut out and 7.2.4.6.2 shall apply.

7.2.4.6.2 If single links are found to be defective or not meet other applicable requirements, defective links may be cut out and a connecting common link inserted in their place. The individual heat treatment and insertion procedure of connecting common links shall be agreed with the Register. Other methods for repair are subject to the written approval of the Register and the end purchaser. Weld repair of chain is not permitted.

7.2.4.6.3 If a crack, cut or defect in the flash weld are found by visual testing or magnetic particle testing, it shall be ground down no more than 5 % of the link diameter in depth and streamlined to provide no sharp contours. The final dimensions shall still conform to the agreed standards and/or other documentation agreed with the Register.

7.2.4.6.4 If unacceptable interior flash weld defects are detected during ultrasonic testing, the link is subject to replacement in accordance with 7.2.4.6.2.

7.2.4.6.5 If a link diameter, length, width and stud alignment do not conform to the required dimensions, these shall be compared to the dimensions of 40 more links; 20 on each side of the affected link. If a single particular dimension fails to meet the required dimensional tolerance in more than 2 of the sample links, all links shall be examined. Replacement of affected links, refer to 7.2.4.6.2.

7.2.4.6.6 If a break load test fails, the Register representative carrying out technical supervision shall be informed in a timely manner, the case shall be recorded and the relevant explanations shall be submitted to the Register representative. Two additional break test specimens representing the same sampling length of the chain (refer to Table 7.2.4.2.2) shall be subjected to the break load test. Based upon satisfactory results of the additional tests and the results of the failure investigation, it may be decided what lengths of chain can be accepted. Failure of either of both additional tests will result in rejection of the sampling length of the chain represented. For replacement, refer to 7.2.4.6.2.

7.2.4.6.7 If a proof load test fails, the Register representative performing technical supervision shall be informed in a timely manner and the case shall be recorded. In the event that two or more links in the proof loaded length fail, that section of proof loaded length shall be rejected.

The above failure investigation shall be carried out especially with regard to the presence in other lengths of factors or conditions (refer to Table 7.2.4.2.2) thought to be causal to failure.

7.2.4.6.8 In addition to the above failure investigation, a break test specimen shall be taken from each side of the one failed link, and subjected to the breaking test. Where multiple chains are produced simultaneously, it is allowed that the preceding flash butt welded link and subsequent flash butt welded link are on an alternative chain length or the other end of the chain length. In such cases the Register requires that two additional break tests shall be taken from the lengths of chain that include the preceding and subsequent welded links. Based upon satisfactory results of both break tests and the results of the failure investigation, it may be decided what length of chain can be considered for acceptance. Failure of either or both breaking tests will result in rejection of the same proof loaded length. Replacement of defective links shall be in accordance with 7.2.4.6.2. If the investigation identifies defects in the flash butt weld or a lower strength flash weld "a glue-weld" is found, additional non-destructive testing such as phased array ultrasonic testing shall be carried out to identify if other links are affected. A full assessment of the flash butt welding machine shall be carried out, together with assessment of the condition of the bar ends prior to welding.

7.2.4.6.9 If the results of tensile specimens testing are unsatisfactory, re-tests shall be conducted according to 1.3.4.2. Failure to meet the specified requirements of either or both additional tests will result in rejection of the sampling length of chain represented and 7.2.4.6.2 shall apply.

7.2.4.6.10 If the results of impact test specimens testing are unsatisfactory, re-tests shall be conducted according to 1.3.4.2. Failure to meet the requirements will result in rejection of the sampling length represented and 7.2.4.6.2 shall apply.

7.2.4.7 Marking.

7.2.4.7.1 The chain shall be marked at the following places:

at each end;

at intervals not exceeding 100 m;

on connecting common links;

on links next to shackles or connecting common links.

7.2.4.7.2 All the marked links shall be stated on the Certificate, and the marking shall make it possible to recognize leading and tail end of the chain. In addition to the above required marking, the first and last common link of each individual charge used in the continuous length shall be traceable and adequately marked.

The marking shall be permanent and legible throughout the expected lifetime of the chain.

7.2.4.7.3 The chain shall be marked on the studs as follows:

chain grade;

certificate No.;

Register stamp.

7.2.4.7.4 The Certificate number may be exchanged against an abbreviation or equivalent. If so, this shall be stated in the Certificate.

7.2.4.7.5 The chain Certificate shall contain information on number and location of connecting common links. The Certificate number and replacement link number may be exchanged against an abbreviation or equivalent. If so, this shall be stated in the Certificate.

7.2.4.8 Documenation.

7.2.4.8.1 A complete chain inspection and testing report in booklet form shall be provided by the chain manufacturer for each continuous chain length. This booklet shall include all dimensional checks, test and inspection reports, non-destructive testing reports, process records, photographs as well as any nonconformity, corrective action and repair work.

7.2.4.8.2 Individual Certificate shall be issued for each continuous single length of chain.

7.2.4.8.3 All accompanying documents, appendices and reports shall carry reference to the original Certificate number.

7.2.4.8.4 The manufacturer shall be responsible for storing, in a safe and retrievable manner, all the docu-mentation produced for a period of at least 10 years.

7.2.5 Testing and inspection of accessories.

7.2.5.1 General.

7.2.5.1.1 These requirements apply but not limited to mooring equipment accessories such as detachable connecting links (shackles), detachable connecting plates (triplates), end shackles and swivel shackles, and subsea connectors.

7.2.5.1.2 All accessories shall be subjected to proof load tests, sample break load tests and sample mechanical tests after final heat treatment in the presence of the Register representative. Where the manufacturer has a procedure to record proof loads and the Register representative is satisfied with the adequacy of the recording system, he need not witness all proof load tests. The Register representative shall satisfy himself that the testing machines are calibrated and maintained in a satisfactory condition. Prior to testing and inspection the Register representative shall make sure that the chain accessories are free from scale, paint or other coating.

7.2.5.1.3 For accessory production a Manufacturing Procedure Specification (MPS) shall be submitted to the Register that details all critical aspects of accessory production, casting, forging, heat treating (including arrangement and spacing of components in the heat treatment furnaces), quenching, mechanical testing, proof and break loading and non-destructive testing.

7.2.5.2 Proof and break load tests.

7.2.5.2.1 All accessories shall be subjected to the proof load specified for the corresponding stud link chain.

7.2.5.2.2 Chain accessories shall be tested at the break load prescribed for the grade and size of chain for which they are intended. At least one accessory out of every batch or every 25 accessories, whichever is less, shall be tested. For individually produced, individually heat treated, accessories or accessories produced in small batches (less than 5), alternative testing shall be carried out. Alternative testing shall be approved by the Register and the following additional conditions shall apply:

.1 alternative testing is described in a written procedure and manufacturing procedure specification (MPS);

.2 a finite element analysis is provided at the break load and demonstrates that the accessory has a safety margin over and above the break load of the chain;

.3 strain age testing (as per procedure approved by the Register) is carried out on the material grade produced to the same parameters at the time of qualification;

.4 if an accessory is of a large size that will make heat treating in batches unfeasible or has a unique design, strain gauges shall be applied during the proof and break load tests during initial qualification and during production. The strain gauge results from production shall be comparable with the results from qualification.

7.2.5.2.3 A batch is defined, in compliance with 7.2.2.3 and 7.2.2.4, as accessories that originate from the same heat treatment charge and the same heat of steel.

7.2.5.2.4 The accessories which have been subjected to the break load test shall be destroyed and not used as part of an outfit, with the exceptions given in 7.2.5.2.5.

7.2.5.2.5 Where the accessories are of an increased dimension or alternatively a material with higher strength characteristics is used, they may be included in the outfit on agreement with the Register, provided that:

.1 the accessories are successfully tested at the prescribed breaking load appropriate to the chain for which they are intended;

.2 it is verified by procedure tests that such accessories are so designed that the breaking strength is not less than 1,4 times the prescribed breaking load of the chain for which they are intended;

.3 strain age properties have been carried out on the material grade produced to the same parameters;

.4 strain gauges have been applied during the break load test in the high stress locations to monitor that the strains stay within allowable limits.

7.2.5.3 Dimensions and dimensional tolerances.

7.2.5.3.1 At least one accessory (of the same type, size and nominal strength) out of 25 shall be checked for dimensions after proof load testing. The manufacturer shall provide a statement indicating compliance with the purchaser's requirements.

7.2.5.3.2 The following tolerances are applicable to accessories:

.1 nominal diameter: +5 %, – 0 %;

.2 other dimensions: ±2 %.

These tolerances do not apply to machined surfaces.

7.2.5.4 Mechanical tests.

7.2.5.4.1 Accessories shall be subjected to mechanical testing as described in 7.2.2.3 and 7.2.2.4. The specimens shall be taken from proof loaded full size accessories that have been heat treated with the production accessories they represent.

At least one accessory out of every batch or every 25 accessories, whichever is less, shall be tested. Hardness tests shall be carried out on finished accessories. The frequency and locations shall be agreed with the Register. The recorded values are for information only and used as an additional check to verify that the heat treatment process has been stable during the accessory production.

The use of separate representative coupons is not permitted except as indicated in 7.2.5.4.4.

7.2.5.4.2 Test location of forged shackles.

Forged shackle bodies and forged Kenter shackles shall have a set of three impact tests and a tensile test taken from the crown of the shackle. Tensile tests on smaller diameter shackles can be taken from the straight part of the shackle, where the geometry does not permit a tensile specimen from the crown. The tensile properties and impact values shall meet the requirements of Table 7.2.2.2.3.3 in the locations specified in Fig. 7.2.2.2.3.3, with the Charpy pieces on the outside radius.

7.2.5.4.3 Test location of cast shackles.

The locations of mechanical tests of cast shackles and cast Kenter shackles can be taken from the straight part of the accessory. The tensile properties and impact values shall meet the requirements of Table 7.2.2.2.3.3 in the locations specified in Fig. 7.2.2.2.3.3.

7.2.5.4.4 The locations of mechanical tests of other accessories with complex geometries shall be agreed with the Register. Rolled plates shall be tested to the standard to which they are produced.

7.2.5.4.5 For individually produced (heat treated) accessories or accessories produced in small batches (less than 5), alternative testing can be proposed to the Register. Each proposal for alternative testing shall be detailed by the manufacturer in a written procedure and submitted to the Register. The following additional conditions may apply:

.1 if separately forged or cast coupons are used, they shall have a cross-section and, for forged coupon, a reduction ratio similar to that of the accessories represented, and shall be heat treated in the same furnace by the same technological procedure, as the actual forgings or castings. Thermocouples shall be attached to the coupon and to the accessories;

.2 if separately forged or cast coupons' application is agreed with the Register, the above provisions shall be confirmed with the relevant scope of testing.

7.2.5.4.6 A batch, in accordance with 7.2.2.3 and 7.2.2.4 is defined as accessories that originate from the same heat treatment charge and the same heat of steel.

7.2.5.4.7 Mechanical tests of pins shall be taken as per Fig. 7.2.2.2.3.3 from the mid-length of a sacrificial pin of the same diameter as the final pin. For oval pins the diameter taken shall represent the smaller dimension. Mechanical tests may be taken from an extended pin of the same diameter as the final pin that incorporates a test prolongation and a heat treatment buffer prolongation, where equivalence with mid length test values have been established. The length of the buffer shall be at least equal to 1 pin diameter dimension which is removed after the heat treatment cycle is finished. The test coupon can then be removed from the pin. The buffer and test shall come from the same end of the pin as per Fig. 7.2.5.4.7.

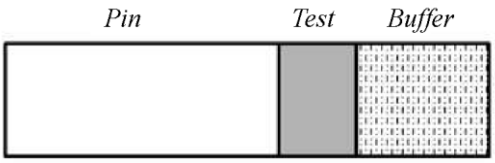

Fig. 7.2.5.4.7
Buffer and test piece location

7.2.5.5 Non-destructive testing and proof load testing.

7.2.5.5.1 ll chain accessories shall be subjected to a final visual testing and measurement. Special attention shall be paid to machined surfaces and high stress regions. Prior to inspection, chain accessories shall have a suitably prepared surface as per the applied non-destructive testing standard. All nonmachined surfaces shall be sand or shot blasted to permit a thorough examination. Where applicable, accessories shall be dismantled for inspection of internal surfaces. All accessories shall be checked by magnetic particles, dye penetrant and ultrasonic

testing. The acceptance/rejection criteria of complying with the design documentation approved by the Register shall be met in full.

7.2.5.5.2 Testing shall be performed in accordance with the RS-agreed standards, such as those indicated below:

EN 10228-1, ASTM A275, ISO 4986, IACS Rec 69 — magnetic particle testing (MT) of forgings;

EN 10228-3, ASTM A388 and ISO 13588 — ultrasonic testing (UT) of forgings;

ASTM E709 — magnetic particle testing (MT) of castings;

ASTM A609 and ISO 13588 — ultrasonic testing (UT) of castings.

The procedures recognized by the Register, including acceptance/rejection criteria, shall be submitted to the Register for review.

Manufacturers shall submit to the Register written procedures for non-destructive testing. Nondestructive testing personnel shall be qualified and certified according to ISO 9712, ACCP or equivalent. Personnel qualification to an employer or responsible agency based qualification scheme as SNT-TC-1A may be accepted if the employer's written practice is reviewed and found acceptable and the level III is ASNT level III, ISO 9712 level III or ACCP professional level III and certified in the applicable method. Non-destructive testing operators shall be qualified to at least level II.

7.2.5.5.3 The manufacturer shall provide a statement that non-destructive testing has been carried out with satisfactory results. This statement shall include a brief reference to the techniques and to the operator's qualification.

7.2.5.5.4 Weld repairs of finished accessories are not permitted.

7.2.5.6 Test failures.

7.2.5.6.1 In the event of a failure of any test the entire batch represented shall be rejected unless the cause of failure has been determined and it can be demonstrated to the Register representative's satisfaction that the condition causing the failure is not present in any of the remaining accessories.

7.2.5.7 Marking.

7.2.5.7.1 A chain grade shall be marked on each accessory.

7.2.5.7.2 The Certificate number may be exchanged against an abbreviation or equivalent. If so, this shall be stated in the Certificate.

7.2.5.8 Documentation.

7.2.5.8.1 A complete inspection and testing report in booklet form shall be provided by the manufacturer for each order. This booklet shall include all dimensional checks, test and inspection reports, non-destructive testing reports, process records and example photographs of components positioned in furnaces, as well as any nonconformity, corrective action and repair work.

7.2.5.8.2 Each type of accessories shall be covered by the separate Manufacturer's Certificate.

7.2.5.8.3 All accompanying documents, appendices and reports shall carry reference to the original Certificate number.

7.2.5.8.4 The manufacturer shall be responsible for storing, in a safe and retrievable manner, all documentation produced for a period of at least 10 years.

7.2.6 Chafing chain for single point mooring arrangements.

7.2.6.1 General.

7.2.6.1.1 The present requirements apply to short lengths (approximately 8 m) of a 76 mm diameter chain to be connected to hawsers for the tethering of oil tankers to single point moorings, FPSO and similar uses.

7.2.6.2 Approval of manufacturing.

7.2.6.2.1 The chafing chain shall be manufactured by works recognized by the Register in accordance with 7.2.1.3.

7.2.6.3 Materials.

7.2.6.3.1 The materials used for the manufacture of the chafing chain shall meet the requirements of 7.2.2.2.

7.2.6.4 Design, manufacturing, testing and certification.

7.2.6.4.1 The chafing chain shall be designed, manufactured, tested and certified in accordance with the requirements of 7.2.3, 7.2.4 and 7.2.5, except that batch heat treatment is permitted.

7.2.6.4.2 The arrangement of the end connections shall be of an approved type.

7.2.6.4.3 The common link shall be of the stud link type — Grade R3 or R4.

7.2.6.4.4 The chafing chain shall be capable of withstanding the breaking test loads of 4884 kN (Grade R3) and 6001 kN (Grade R4) (in this case, documented evidence of satisfactory testing of a similar diameter mooring chain in the prior 6 month period may be submitted to the Register for approval).

7.2.6.4.5 The chain lengths shall be proof load tested in accordance with 7.2.4.2. The test load for Grade R3 is 3242 kN and for Grade R4 is 4731 kN.

7.2.6.4.6 The requirements specified in this Chapter are also applicable to other diameter chafing chains, such as 84 and 96 mm, subject to compliance with the proof and break load requirements specified for the chain grade and diameters in Table 7.2.3.2.7.1.

8 REQUIREMENTS FOR MANUFACTURE OF ANCHORS

8.1 GENERAL

8.1.1 The present requirements apply to anchors and the materials used in their manufacture which are subject to technical supervision.

The Section requirements also apply to manufacture and testing, as well as to survey of:

anchors produced from cast or forged steel;

anchors fabricated by welded rolled steel plate and bars.

8.1.2 Anchors are divided into the following types:

.1 ordinary type:

stockless anchors;

stocked anchors;

.2 HHP anchors;

.3 SHHP anchors, not exceeding 1500 kg in mass.

Any changes to the anchor design made during the manufacture shall be preliminarily agreed with the Register.

8.1.3 The types of anchors.

8.1.3.1 Ordinary stockless anchors:

.1 ordinary stockless anchors shall be approved as a whole and shall have the design complying with the RS Rules;

.2 the mass of a stockless anchor box including the pins and fittings shall be not less than 60 % from the total mass of the anchor;

.3 for anchors of equal masses, the mass of each bower stockless anchor specified in Table 3.1.3-1, Part III "Equipment, Arrangements and Outfit" is required. The mass of individual anchors may vary within the range of ±7 % of the specified mass provided the total mass of the anchors is not less than the required mass of equal mass anchors.

8.1.3.2 HPP anchors:

.1 a high holding power (HPP) anchor is an anchor with twice the holding power of that of an ordinary stockless anchor of the same mass. An HPP anchor shall be suited for the use on the ship and shall not require any prior adjustment or particular placement on the sea bottom;

.2 if a special anchor type has a HPP anchor specification with proved high holding power and is used as a bower anchor, the mass of each separate anchor can be 75 % of the mass required for the ordinary stockless anchors in Table 3.1.3-1, Part III "Equipment, Arrangements and Outfit";

.3 for the anchor to be recognized as an HPP anchor satisfactory full-scale tests shall be carried out in accordance with 3.3.3 of Part III "Equipment, Arrangements and Outfit".

8.1.3.3 SHPP anchors:

.1 a super high holding power (SHPP) anchor is an anchor with four times the holding power of an ordinary stockless anchor of the same mass. An SHHP anchor is suited for use on the ships of limited area of navigation and does not require any prior adjustment or particular placement on the sea bottom;

.2 the use of SHHP is limited to the ships of limited area of navigation in accordance with 3.3.4, Part III "Equipment, Arrangements and Outfit". The mass of an SHHP anchor, as a rule, does not exceed 1500 kg;

.3 the requirements to the design of SHHP anchors are applied if EN>205. In case of EN<205 the SHHP anchor design criteria are applied to the mass of the anchor specified in IACS Rec No 10 for ordinary stockless anchors, lessened in accordance with 3.1.3, Part III "Equipment, Arrangements and Outfit";

.4 when SHHP anchors with a confirmed holding power are used as bower anchors, the mass of each of these anchors may be decreased to 50 % of the mass of the ordinary stockless anchors according to Table 3.1.3-1, Part III "Equipment, Arrangements and Outfit";

.5 for the anchor to be recognized as an SHHP anchor satisfactory full-scale tests shall be carried out in accordance with the requirements of 3.3.3 of Part III "Equipment, Arrangements and Outfit".

8.1.4 Anchors and components thereof shall be made at the manufacturers recognized according to the requirements of 1.3.

8.2 MATERIALS

8.2.1 Materials for anchors.

All anchors shall be manufactured from materials meeting the requirements given below.

8.2.1.1 Cast steel anchor flukes, shanks, swivels and shackles shall be manufactured and tested in accordance with the requirements of 3.8 for castings of welded structures. The steel shall be fine grain treated with aluminium. If test programme B is selected according to 8.4.2.1 then Charpy V notch (CVN) impact testing is required. Special consideration shall be given to the use of materials for swivel castings.

8.2.1.2 Forged steel anchor pins, shanks, swivels and shackles shall be manufactured and tested in accordance with the requirements of 3.7. Shanks, swivels and shackles shall comply with the requirements for carbon and carbon-manganese steels for welded structures. Materials for swivel castings may comply with the requirements of the standards agreed with the Register.

8.2.1.3 Rolled billets, plate and bar for fabricated steel anchors shall be manufactured and tested in accordance with the requirements of 3.2.

8.2.1.4 Rolled bar intended for pins, swivels and shackles shall be manufactured and tested in accordance with the requirements of 3.2 or 3.7.

8.2.2 In addition to the requirements of 8.2.1, the material of super high holding power anchors shall meet the following requirements:

welded steel anchors — 3.2 of this Part;

Section 4, Part XIV "Welding";

cast steel anchors — 3.8 of this Part;

shackles — 3.7, 3.8 of this Part.

The steel grade for welded anchors of high holding power shall be selected in accordance with the requirements of 1.2.1, Part II "Hull" for category II members. The level of requirements in impact tests of the welded joint shall meet the relevant requirements for a base metal (refer to Section 4, Part XIV "Welding"). The impact energy value required for the shackle material shall meet the requirements of 7.1 for Grade 3 steel.

The impact energy value (*KV*) for the material of anchor castings shall be not less than 27 J at 0 °C.

8.3 MANUFACTURE OF ANCHORS

8.3.1 Tolerance.

If not otherwise specified in standards or on drawings and in specifications, the following tolerance shall be applied.

The clearance either side of the shank within the shackle jaws shall be:

3 mm — for small anchors up to 3 t in weight;

4 mm — for anchors from 3 t to 5 t in weight;

6 mm — for anchors from 5 t to 7 t in weight;

12 mm — for anchors 7 t and over in weight.

The shackle pin shall be a push fit in the eyes of the shackle which shall be chamfered on the outside to ensure a good tightness when the pin is clenched over on fitting. The shackle pin to hole tolerance shall be no more than 0,5 mm for pins up to 57 mm and 1,0 mm for pins of larger diameter.

The trunnion pin shall be a snug fit within the chamber and be long enough to prevent horizontal movement. The gap shall be no more than 1 % of the chamber length.

The lateral movement of the shank shall not exceed 3 deg (refer to Fig. 8.3.1).

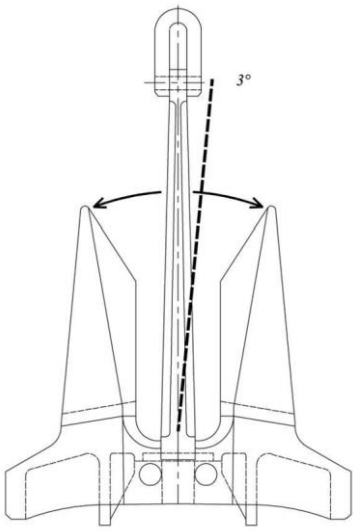

Fig. 8.3.1

8.3.2 Welding of anchors.

Welded structures of fabricated anchors shall be done in accordance with procedures approved by the Register. Welding shall be carried out by qualified welders holding a Certificate of Approval Test for Welder (refer to Section 5, Part XIV "Welding"). Welding consumables shall be approved by the Register. Non-destructive testing shall be carried out in accordance with the requirements of Section 3, Part XIV "Welding".

8.3.3 Heat treatment.

Components for cast and forged anchors shall be properly heat treated; fully annealed; normalized or normalized and tempered in accordance with the requirements of 3.7 and 3.8.

Fabricated anchors may require heat treatment for stress relief after welding. The heat treatment for stress relief shall be carried out in accordance with the documentation approved by the Register. The temperature in heat treatment shall not exceed the tempering temperature for the base metal.

8.3.4 Non-destructive testing.

All parts of the anchor surface shall have a clean surface consisting with the method of anchor components manufacture.

No cracks, notches and other defects that would impair the anchor performance are acceptable.

8.3.5 Repairs.

Any necessary repairs to forged and cast anchors shall be carried out in accordance with the requirements of Sections 7 and 8. Repairs to fabricated anchors shall be agreed with the Register representative and carried out by qualified welders recognized by the Register. Repair welding shall follow the same parameters and the same welding procedures used in construction.

8.3.6 Anchor assembly.

Assembly and fitting shall be done in accordance with the Register-approved documentation.

Securing of the anchor pin, shackle pin, etc. by welding shall be done in accordance with the documentation approved by the Register.

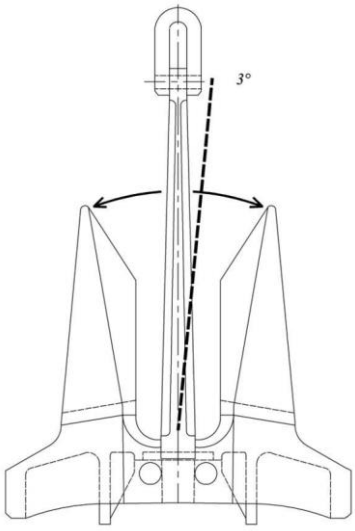

8.4 TESTING AND ISSUE OF DOCUMENTS

8.4.1 Proof load testing.

Proof load testing shall be carried out by an approved testing facility.

Proof load testing for ordinary, high holding power and super high holding power anchors shall be carried out in accordance with the pertinent requirements of Appendix 3 to Section 3, Part IV "Technical Supervision during Manufacture of Products" of the Rules for Technical Supervision during Construction of Ships and Manufacture of Materials and Products for Ships.

8.4.2 Product tests.

8.4.2.1 Product test programme.

Test for the material of each component product shall be carried out by one of the programmes below.

Table 8.4.2.1-1

Applicable programmes for each product form

Product tests	Product form		
	Cast products	Forged products	Welded products
Programme A	+	–	–
Programme B	+[1]	+	+
[1] CVN impact tests shall be carried out to demonstrate at least 27 J average at 0 °C.			

Table 8.4.2.1-2

Product test type depending on test programme

Programme A	Programme B
Drop test	–
Hammering test	–
Visual testing	Visual testing
Non-desrtuctive testing	Non-desrtuctive testing
	Extended non-desrtuctive testing

8.4.2.2 Drop test.

Each anchor fluke and shank shall survive dropping from a height of 4 m on to a steel slab without fracturing. The steel slab shall have an adequate thickness to resist the impact of the dropped component.

8.4.2.3 Hammering test.

After the drop test, hammering tests shall be carried out on each anchor fluke and shank, which is slung clear of the ground, using a non-metallic sling, and hammered to check the soundness of the component. A hammer of at least 3 kg mass shall be used.

8.4.2.4 Visual testing.

After proof load testing, visual testing of all accessible surfaces shall be carried out.

8.4.2.5 Non-desrtuctive testing.

After proof load testing, non-desrtuctive testing shall be carried out in accordance with the requirements of Tables 8.4.2.5-1 and 8.4.2.5-2.

Table 8.4.2.5-1

Non-desrtuctive testing for ordinary and high holding power anchors

Location	Non-desrtuctive testing method
Gate locations	PT or MT
Riser locations	PT or MT
Weld repairs	PT or MT
Forged components	–
Fabrication welds	PT or MT
PT = penetrant testing; MT = magnetic particle testing.	

Table 8.4.2.5-2

Non-desrtuctive testing for super high holding power anchors

Location	Non-desrtuctive testing method
Gate locations	PT or MT and UT
Riser locations	PT or MT and UT
All surfaces of castings	PT or MT
Weld repairs	PT or MT
Forged components	–
Fabrication welds	PT or MT
PT = penetrant testing; MT = magnetic particle testing; UT = ultrasonic testing.	

The scope and criteria of non-destructive testing for forgings and castings, which are equally applicable for anchor components, are given in 2.5, Part III "Technical Supervision during

Manufacture of Materials" of the Rules for Technical Supervision during Construction of Ships and Manufacture of Materials and Products for Ships.

8.4.2.6 Extended non-desrtuctive testing.

After proof load testing and non-desrtuctive testing, extended non-desrtuctive testing shall be carried out in accordance with the requirements of Table 8.4.2.6.

Table 8.4.2.6

Extended non-desrtuctive testing for ordinary, high holding power and super high holding power anchors

Location	Non-desrtuctive testing method
Feeders of castings	PT or MT and UT
Risers of castings	PT or MT and UT
All surfaces of castings	PT or MT
Random areas of castings	UT
Weld repairs	PT or MT
Forged components	–
Fabrication welds	PT or MT

The scope and criteria of non-destructive testing for forgings and castings, which are equally applicable for anchor components, are given in 2.5, Part III "Technical Supervision during Manufacture of Materials" of the Rules for Technical Supervision during Construction of Ships and Manufacture of Materials and Products for Ships.

8.4.2.7 Repair criteria.

If defects are detected by non-desrtuctive testing, repairs shall be carried out in accordance with 8.3.5. Fractures and other defects being the results of a drop test or hammering test repaires are not permitted and the component shall be rejected.

8.4.3 Mass and dimensional inspection.

Unless otherwise agreed, the verification of mass and dimensions is the responsibility of the manufacturer. The Register's representative is only required to monitor this inspection.

The mass of the anchor shall exclude the mass of the swivel, unless this is an integral component.

8.4.4 Retests.

Retests shall be carried out in accordance with the requirements of 1.3.2.4.

8.4.5 Marking.

Anchors which meet these requirements shall be stamped on the shank and the fluke. The marking on the shank shall be approximately level with the fluke tips. On the fluke, these markings shall be approximately at a distance of two thirds from the tip of the bill to the center line of the crown on the right hand fluke looking from the crown towards the shank. The markings shall include:

mass of anchor;

identification number (e.g. test report No. or Manufacturer's Certificate No.);

Register stamp;

manufacturer's mark.

The unique cast identification shall be cast on the shank and the fluke.

8.4.6 Documents to be issued to anchor.

The Register issues the certificate for anchors meeting the present requirements which shall contain the following data:

manufacturer's name;

anchor type;

anchor mass;

fluke and shank identification numbers;

grade of material;

proof test loads;

heat treatment;
Register stamp.

8.4.7 Painting.

Anchors shall not be painted until all tests and inspections have been completed.

9 TITANIUM ALLOYS

9.1 GENERAL REQUIREMENTS

9.1.1 The requirements of this Chapter apply to the semi-finished products and products of titanium alloys to be surveyed by the Register during their manufacturing and in compliance with the requirements in the other chapters and parts of the Rules.

These requirements cover the semi-finished products of wrought titanium alloys (sheets, plates, forgings, pressed sections) intended for deep-sea submersibles and civil shipbuilding. The Chapter also covers titanium alloy forgings intended for manufacture of the containment structures of nuclear power plants and pipes.

9.1.2 The alloys shall be designated in compliance with the national standards.

In accordance with the requirements in 1.1.3, use of the titanium alloys and their semi-finished products is allowed by RS-agreed international standards, or according to the manufacturer's specifications agreed with the Register.

The application of semi-finished products of titanium alloys, whose chemical composition, mechanical properties or conditions of delivery do not comply with the requirements of the present Chapter, may be allowed after the submission of the data confirming the alloy properties, their corrosion resistance, both in general and in contact with other materials, welding procedure features and the alloys' behavior under the conditions of their use.

All semi-finished products of titanium alloys shall be manufactured under the Register technical supervision by the manufacturers recognized in accordance with 1.3.1.2. The documentation for supplying the semi-finished products of titanium alloys shall be recognized by the Register. The material complying with the Register requirements shall be delivered with the Register certificates and stamps.

9.1.3 The Register representative performing technical supervision at the manufacturer, which has no melting facilities, shall be provided with the certificates issued by the manufacturer of ingots, slabs or billets with the manufacturer's name, alloy grade, heat number and chemical composition specified. The particulars of the system, which allows identifying ingots, slabs or billets shall also be provided. The manufacturer producing titanium alloys shall be recognized by the Register.

9.2 WROUGHT TITANIUM ALLOYS

9.2.1 These requirements apply to the semi-finished products of the following titanium alloys:

rolled products (sheet, plate) — alloys:
ВТ1-00, ВТ1-0, ПТ-3В;
extruded sections (bulb-plate section) — alloy: ПТ-3В;
stamped billets — alloy: ПТ-3В;
forgings — alloys: ПТ-3В, 5В, 37;
rods — alloys: ВТ1-00, ВТ1-0, ВТ6, ВТ6С, ПТ-3В.

9.2.2 Chemical composition.

The chemical composition of wrought titanium alloys shall meet the requirements of Table 9.2.2. If required, on the Register's demand, the samples for chemical analysis shall be taken directly from a semi-finished product (sheet, panel, forging, etc.).

Table 9.2.2

Chemical composition of wrought titanium alloys

Alloy grade	Basic components, %						Impurities, %, max						
	Al	V	Zr	Mo	Nb	C	Zr	Fe	Si	C	O_2	H_2	N_2
ВТ1-00	–	–			–			0,15	0,08	0,05	0,10	0,008	0,04
ВТ1-0	–	–			–			0,30	0.13	0,07	0,25	0,010	0,04
ПТ-3В	3,5 — 5,0	1,2 — 2,5			–		0,30	0,25	0,25	0,10	0,15	0,008	0,04
ВТ6	5,35 — 6,8	3,5 — 5,3	–		–		0,30	0,60	0,10	0,10	0,20	0,015	0.05
ВТ6С	5,3 — 6,5	3,5 — 4,5	–	–	–		0,30	0,25	0,15	0,10	0,15	0,015	0,05
5В	4,7 — 6,3	1,0 — 1,9	–	0,7 — 2,0	–	0,06 — 0,14	0,10	0,25	0,12		0,13	0,008	0,04
37	4,3 — 6,3	–	0,2 — 1,0	1,5 — 2,5	up to 1,0	0,06 — 0,14	–	0,25	0,12		0,14	0,008	0,04

N o t e s : 1. The aluminum content of up to 0,3 % and 0,7 % in alloys ВТ1-00 and ВТ1-0, respectively, is allowed.
2. The content restrictions specified for forgings used in nuclear power plants:
$N_2 \leq$ 0,03 % for alloys ПТ-3В and 5В;
Mo: 1,0 — 2,0 % for alloy 5В.

9.2.3 Mechanical properties.

The mechanical properties of wrought titanium alloys shall meet the requirements of Tables 9.2.3-1 — 9.2.3-4.

Table 9.2.3-1

Mechanical properties of sheets and plates

Alloy	Yield stress $R_{p0,2}$, MPa, min.	Tensile strength R_m, MPa, min.	Elongation, %, min.	
			Thickness, mm	A_{5d}
ВТ1-00	–	295	0,3 — 1,8	30
			1,8 — 6,0	25
			6,0 — 10,5	20
ВТ1-0	–	295	11 — 60	14
			60 –150	10
ВТ1-0	–	375	0,3 — 1,8	25
			1,8 — 6,0	30
			1,8 — 6,0	25
			6,0 — 10,5	20
ВТ1-0	–	370	11 — 60	13
		295	60 — 150	10
ПТ-3В	588	638	0,3 — 145	10

Table 9.2.3-2

Mechanical properties of extruded sections

Alloy	Yield stress $R_{p0,2}$, MPa, min.	Tensile strength R_m, MPa, min.	Section number	Elongation A_{5d}, %, min.	Impact toughness *KCU*, kJ/m^2
ПТ-3В	588	638	6, 8, 10, 12	10	690

Table 9.2.3-3

Mechanical properties of forgings and stamped billets

Alloy	Direction of cutting out specimens	Yield stress $R_{p0,2}$, MPa, min.	Tensile strength *Rm*, MPa, min.	Diameter or thickness (wall thickness), mm	Elongation A_{5d}, %, min.	Reduction of area, %	Impact toughness *KCU*, kJ/m^2
ПТ-3В	Longitudinal	589	638	≤ 100	6 — 10	25	687
				>100 to ≤ 200	9	25	25
				>200 to ≤ 450	8	22	589
				>450 to ≤ 650	7		
	Tangential (transversal)	540	589	≤ 100	7	20	589
				>100 to ≤ 200	7	15	
				>200 to ≤ 450	6	15	
				>450 to ≤ 650	5	13	
5В	Longitudinal	755	805	≤ 100	9	22	491
				>100 to ≤ 650	8	18	
	Tangential			>120 to ≤ 200	7	15	
				>120 to ≤ 650	5	11	
37	Longitudinal	764	815	≤ 200	10	22	491
				>200 to ≤ 650	7	17	
	Tangential	736	786	>120 to ≤ 200	9	18	
				>200 to ≤ 650	6	12	

Table 9.2.3-4

Mechanical properties of rods

Grade	Yield stress $R_{p0,2}$, MPa, min.	Tensile strength R_m, MPa, min.	Elongation, %, min.		Impact toughness *KCU*, kJ/m^2
ВТ6	–	835 — 1049	140 — 250	6	
ВТ6С	–	755 — 981	140 — 250	6	
ВТ1-00	–	295	10 — 12	20	–
		295	12 — 100		100
		265	100 — 150		600
ВТ1-0	–	345	10 — 12		–
			12 — 100	15	700
			100 — 150	–	500
ПТ-3В	590	635 — 885	10 — 22	11	700
		635 — 855	25 — 150	–	–

N o t e s : 1. Billets for cutting out the specimens shall be annealed before machining.
2. ВТ6 and ВТ6С alloy rods shall be forged, ВТ1-00 — rolled, ПТ-3В — hot-rolled.
3. ПТ-3В alloy rods of over 25 mm in diameter shall be supplied in annealed condition.
4. Impact toughness on rods of 10 — 12 mm in diameter is not determined.

9.2.4 Condition of supply.

Condition of supply of titanium alloys shall be specified in the supply documentation approved by the Register.

The heat treatment (annealing) of semi-finished products of titanium and titanium alloy shall be carried out to improve the structure or relieve the stresses. The semi-finished products may be supplied without heat treatment or in an annealed condition.

The parameters of heat and heat and mechanical treatment providing alloy properties shall be specified by the manufacturer of semi-finished products. The condition of supply shall be indicated in the Manufacturer's Certificate issued to a semi-finished product.

Sheets and plates shall be supplied in annealed, pickled condition without a gas-saturated layer. The latter shall be removed by pickling or abrasive cleaning of the entire surface followed

by pickling. The absence of the gas-saturated layer shall be checked by sampling for a bend angle.

9.2.5 Sampling.

Sampling for determination of mechanical pro-perties of semi-finished products shall be provided in compliance with documentation approved by the Register.

Cutting out the billets for specimens, as well as making the very test specimens, shall be carried out by the methods, which prevent the changes of alloy properties due to hardening.

The sample dimensions shall be adequate for carrying out both single and repeated tests of longitudinal, transverse or tangential specimens.

Samples and specimens shall be marked in such a way that they may be identified with a particular semi-finished product during testing, and the location of their cutting-out and orientation may be determined. The specimens shall be prepared according to 9.2.6.

9.2.5.1 Unless otherwise specified, the samples for determination of mechanical properties shall be prepared in the way which secures the preparation of specimens with the longitudinal axis oriented as follows:

.1 rolled products:

specimens for tensile testing shall be cut out:

across rolling direction — sheets and plates of BT1-00 and BT1-0 titanium alloys of any thickness, and of the ПТ-3В of 0,3 — 8,0 mm thick;

along rolling direction — sheets and plates of ПТ-3В titanium alloy of 8,0 — 145 mm thick.

Impact test specimens for determination of impact toughness shall be cut out along rolling direction.

When preparing the specimens, the surface layer of metal shall be removed;

.2 forgings and stamped products of ПТ-3В alloy:

samples shall be taken in longitudinal direction coinciding with the longitudinal axis of a forging, in the tangential direction normal to the longitudinal axis and the radius of a forging, and in the transversal direction normal to the longitudinal axis for the forgings of a square and rectangular cross-section.

Tensile test specimens shall be cut out from the largest cross-section of the forgings:

from solid forgings — at a distance of 1/3 of the radius from a rough surface;

from hollow forgings with a wall thickness of up to 100 mm — at a distance of 1/2 of the forging wall thickness;

from hollow forgings with a wall thickness of over 100 mm — at a distance of 1/3 of the forging wall thickness from an outer surface;

from disc-shaped forgings — at a distance of up to 120 mm from the outer side surface of a forging.

Impact test specimens shall be cut out at a distance from a rough surface not exceeding one-sided machining allowance.

Impact test specimens and specimens for determination of the fraction of a total mass of hydrogen shall be taken at a distance from a rough surface not exceeding one-sided machining allowance;

.3 pressed section:

for tensile testing, billets shall be cut out from a section web, for impact testing and angle-set bend testing for a technological probe, the billets for making specimens shall be taken from a section flange;

.4 rods:

specimens shall be cut out only along the rolling direction:

for rods of up to 35 mm in diameter — from the cross-section center;

for rods of over 35 mm in diameter — at a distance of 1/2 of a radius from the surface.

Mechanical properties of 5 % of rods, but at least one rod from the batch supplied, shall be checked. Such check shall be carried out for two break and two impact test specimens.

9.2.6 Scope of tests.

9.2.6.1 Tests shall be conducted in compliance with the requirements of the national and/or international standards and Section 2.

Unless otherwise specified, the tensile tests according to 2.2.2.3 shall be conducted on the specimens of a rectangular cross-section with a gauge length $L_0 = 5{,}65\sqrt{S_0}$ and of a circular cross-section with a gauge length $L_0 = 5d_0$, and the impact tests for determination of the impact toughness *KCU* shall be conducted on the U-notched specimens according to 2.2.3.1.

9.2.6.2 Semi-finished products of wrought titanium alloys shall be subjected for testing in batches. The batch shall contain the semi-finished products of one grade (one heat), one shape and of the same dimensions (one thickness for sheets and plates), one condition of supply, manufactured according to the common process.

The batch size and the scope of metal testing shall comply with the requirements of documentation for delivery agreed by the Register. The batch size shall not exceed 8000 kg.

9.2.6.3 In general, unless otherwise specified, depending on the type of a semi-finished product, the scope of tests shall be as follows:

.1 rolled products:

mechanical properties of ВТ1-00, ВТ1-0 and ПТ-3В alloys shall be determined on each sheet and plate;

.2 forgings, stampings:

ПТ-3В, 5В and 37 alloys.

The mechanical properties on the forgings with a cross-section dimensioned 100 mm and less and/or with a mass of 30 kg or less shall be determined on 15 % of products in a batch, and on each forging (stamped product) for the ones with a cross-section dimensioned over 100 mm and/or with a mass of over 30 kg.

Every forging of ПТ-3В, 5В and 37 alloys shall be subjected to tensile testing, impact testing and checking the fraction of a total mass of hydrogen. Two specimens are generally cut out from one selected sample for tensile testing at temperatures 20 °C and 350 °C. Impact toughness is checked during impact test of two specimens at a temperature of 20 °C.

As for forgings of 3000 mm long and over, the above tests (determination of mechanical properties and the fraction of a total mass of hydrogen) shall be carried out on the metal sampled from both ends of the forging.

The fraction of a total mass of hydrogen shall be checked with the manufacturer's normative documentation;

.3 pressed sections:

mechanical properties of the finished sections shall be determined on at least 10 % of a batch size, but on two sections as a minimum. Every section of the batch shall be checked for the geometrical dimensions, surface quality, twisting angle, angular dimensions and longitudinal curvature. The macrostructure shall be checked on a transverse macrotemplate cut out from the head end of each section;

.4 rods:

ВТ1-00, ВТ1, ВТ6, ВТ6С alloys.

The determination of mechanical properties of finished sections and examination of their macrostructure and microstructure shall be carried out on at least 5 % of products from a batch.

Where the test results are unsatisfactory, retesting shall be carried out in compliance with the requirements in 1.3.2.3 and/or the documentation approved by the Register.

The macrostructure and microstructure of rods shall be examined on 5 % of products from the batch, but at least on one rod.

9.2.7 Inspection.

The semi-finished products of wrought titanium alloys prepared for delivery shall be free of internal and external defects, which adversely affect their use for their designated purpose. Every semi-finished product shall be visually examined and its dimensions and surface condition

shall be checked. The nondestructive testing shall be used on the customer's demand in accordance with the documentation approved by the Register. The manufacturer is supposed to use the methods of non-destructive testing required in manufacture of the wrought titanium alloys in order to maintain the products quality at the level of the relevant standards.

To eliminate the detected surface defects, grinding or dressing may be used, provided that the semifinished product dimensions therewith will remain within tolerable deviations.

The manufacturer is liable for the quality of control and the maintenance of the specified dimensions of semi-finished products of titanium alloys. The Register's representative may require to witness measurements of semi-finished products.

The minus thickness deviations for rolled products of titanium alloys of 10,2 mm thickness shall meet the documentation approved by the Register. Limiting deviations of the rolled products over 10,2 mm thick shall correspond to the values given in Tables 9.2.7-1 and 9.2.7-2.

Table 9.2.7-1

Limiting minus thickness deviations for rolled products of titanium alloys depending on their thickness

Grade	Limiting minus	deviations in thickness of plates, mm, at width, mm	
	thickness, mm	600, 700, 800, 900, 1000	1200, 1300, 1400, 1500, 1600
ВТ1-00 ВТ1-0 ПТ-3В	11, 12, 13, 14, 15, 16	1,0	1,2
	18, 20, 22, 25, 28,30, 32, 35	1,5	1,5
	38, 40, 45, 50, 55, 60	2,0	2,0
	70, 80, 90, 100	2,5	2,5
	110, 120, 130, 140, 150	3,0	3,0
ПТ-3В	от 12 до 16	1,2	1,2
	от 16 до 20	1,5	1,5
	от 20 до 35	1,5	1,5
	от 35 до 50	2,0	2,0

Table 9.2.7-2

Limiting minus deviations in diameter for rods of titanium alloys

Grade	Nominal diameter, mm	Limiting deviation in diameter, mm
ВТ1-00 ВТ1-0	10, 12	0,6
	14, 16, 18	0,8
	20, 22, 25, 28, 30, 32, 35	
	38, 40, 42, 45, 48	1,0
	50, 52, 55, 60	1, 4
	65, 70, 75, 80, 85, 90, 100	1,5
	110, 120, 130, 140, 150	3,0
ПТ-3В	10, 12	0,6
	14, 16, 18	0,8
	20	1,0
	35 , 40, 45, 50, 55, 60	2,0
	65, 70, 75, 80, 90, 100, 110, 120, 130, 140, 150	3,0

9.2.8 Marking.

The basic requirements for marking are set forth in 1.4 and in the conditions of supply.

Every semi-finished product shall have the manufacturer's marking and the Register stamp clearly made in the specified manner and in a due place.

The marking shall include, as a minimum:

name or designation of the manufacturer;

grade of alloy and condition of supply in compliance with the requirements of this Chapter;

number of a batch, semi-finished product or identification number according to the manufacturer's system, which allows tracing complete production process;

quality stamp.

If the semi-finished products are delivered in bundles, the marking may be made on tags.

9.2.9 Documents.

If supply is provided by piece, every batch or semi-finished product, which has undergone testing according to 9.2.6, shall be provided with the Register Certificate and Manufacturer's Certificate. Form and content of the Manufacturer's Certificate shall be agreed with the Register and the customer.

The Register Certificate shall include:

order number; construction project number, if known;

name, number, dimensions and weight of a semi-finished product;

grade (category) of alloy and condition of supply;

number of a batch or a semi-finished product, or identification number, which allows identifying the supplied material and tracing the whole production process;

name of manufacturer; code and designation of drawing;

designation of documentation the material supply complies with.

The Register Certificate shall be supplemented with the Manufacturer's Certificates containing the details of the chemical analysis and mechanical properties, which confirm the material conformity to the Register requirements, test reports.

9.3 TITANIUM ALLOYS FOR NUCLEAR POWER PLANTS

9.3.1 General requirements.

9.3.1.1 These requirements apply to forgings of titanium alloys intended for manufacturing of the containment structures of nuclear power plants being subject to the Register survey.

The forgings are manufactured of the following sizes:

solid round forgings of 80 to 650 mm in diameter and of 500 to 6000 mm in length;

circular forgings of 150 m to 3200 mm in outer diameter, 100 to 2900 mm in inner diameter and 50 to 1400 mm in length;

discs of 100 to 1800 mm in diameter and 50 to 800 mm in height;

expanded rings of 300 to 1800 mm in outer diameter, 40 to 450 mm in height and 30 to 120 mm in wall thickness.

9.3.1.2 As initial billets for manufacture of forgings the following shall be used:

ingots;

forgings and forged rods;

expanded rings.

9.3.1.3 The degree of plastic deformation (forging reduction) calculated on the basis of the cross section of a casting shall be such that freedom from defects, homogeneous structure and the required mechanical properties after heat treatment are provided.

9.3.2 Chemical composition.

The chemical composition of forgings of ПТ-3В and 5В titanium alloys for the structures of nuclear power plant (drum, cover and bottom) shall meet the requirements in Table 9.2.2. The chemical composition of forgings (except the hydrogen content) is determined by a manufacturing process during melting ingots on the sample taken during its casting. The hydrogen content is determined during acceptance tests on the process samples cut out from the forgings.

9.3.3 Mechanical properties.

The minimum required values of strength (R_m and $R_{p0,2}$) and plastic (A_5 and Z) properties of the forging material depending on the cross-section size and the working temperature are given in Tables 9.3.3-1 and 9.3.3-2.

Heat treatment shall be carried out in electric furnaces fitted with the recorders. The furnace shall provide the required process quality and the relevant level of monitoring, irrespective of the billet dimensions.

Table 9.3.3-1

Mechanical properties of forgings of ПТ-3В alloy depending on working temperature and cross-section size

Diameter or wall thickness, mm	Characteristic	Test temperature, °C							
		20	50	100	150	200	250	300	350
100 — 200	R_m, MPa	640	598	536	467	408	392	377	345
	$R_{p0,2}$, MPa	590	540	471	417	353	324	305	295
	A_5, %	9,0	9,2	9,5	11,5	13,5	14,4	15,3	14,6
	Z, %	22	22	23,3	28,2	33,0	35,2	37,4	36,5
201 — 450	R_m, MPa	640	598	536	472	408	392	377	345
	$R_{p0,2}$, MPa	590	540	471	412	353	324	305	295
	A_5, %	8,0	8,2	8,5	8,5	8,5	8,5	8,5	8,5
	Z, %	22	22,6	23,3	28,2	33,0	35,2	37,4	36,4

Table 9.3.3-2

Mechanical properties of forgings of 5B alloy depending on working temperature and cross-section size

Temperature, °C	Forgings (cross-section of up to 100 mm)				Forgings (cross-section of 100 — 500 mm)			
	R_m, MPa	$R_{p0,2}$, MPa	A_5, %	Z, %	R_m, MPa	$R_{p0,2}$, MPa	A_5, %	Z, %
20	780	730	9,0	18	755	687	7	15
150	620	560	9,0	20	600	540	8	20
250	530	460	10	20	500	440	8	20
350	450	390	12	25	420	370	8	20

9.3.4 Condition of supply.

The general requirements for the condition of supply shall be in compliance with 9.1.4.

9.3.5 Sampling.

Sampling shall be carried out in compliance with 9.1.5.

9.3.6 Scope of tests.

Scope of forging tests shall comply with 9.1.6.

9.3.7 Inspection.

9.3.7.1 The inspection of forgings shall be carried out in compliance with 9.1.5.

9.3.7.2 Forgings shall be submitted to the Register for visual control of the quality of outer and inner surfaces (for circular forgings). Forgings shall be free of defects preventing their intended use.

9.3.7.3 Where the defects unacceptable by the Register Rules or the Register-approved documentation are detected during subsequent machining or testing, a forging shall be rejected, despite the covering documents and Manufacturer's Certificates available.

9.3.7.4 Surface defects may be eliminated by local dressing or removing the defective area metal with a boring cutter within the tolerances for machining. Non-destructive (dye penetrant, ultrasonic and radiographic) testing shall be used to check the absence of defects.

9.3.7.5 Forging repair with welding, as well as repair procedure, the subsequent heat treatment, the methods and criteria of inspection shall be agreed with the Register.

9.3.8 Marking.

The marking of forgings shall comply with 9.2.8.

9.3.9 Documents.

The requirements for support documentation for forgings shall comply with 9.2.9.

9.4 PIPES

9.4.1 General requirements.

9.4.1.1 These requirements apply to titanium hot-formed and cold-formed pipes, and also welded pipes for heat exchangers, steam generators, ship's systems and pipelines subject to the Register survey during manufacture.

9.4.1.2 Titanium pipes shall be produced by the manufacturers recognized according to 1.3.1.2 in compliance with these requirements and the requirements of the Register-approved standards and/or technical documentation.

9.4.2 Chemical composition.

9.4.2.1 The material chemical composition for titanium alloy pipes shall be selected considering the required mechanical properties at the room temperature and the design elevated one; the hydrogen content therewith shall not exceed:

for cold-formed pipes — 0,005 %;

for hot-formed pipes — 0,005 %;

for welded pipes — 0,007 %.

9.4.2.2 The chemical composition of the titanium pipe material, except the hydrogen content (hydrogen and nitrogen content for welded pipes), shall be determined by the relevant chemical composition of an ingot or tubular billet used for the pipe batch manufacture. Requirements to chemical composition of a titanium alloy ingot or tubular billets shall meet the requirements of Table 9.4.2.2 and be in accordance with the RS practice.

Table 9.4.2.2

Chemical composition of titanium alloy ingots or tubular billets

Alloy grade	Chemical composition, %													
	Impurities content, %, max													
	Ti	Al	V	Mo	Zr	Mn	Cr	Si	Fe	O	H	N	C	Other impurities in total
ВТ1-00	Base	0,30	–	–	–	–	–	0,08	0,15	0,10	0,008	0,04	0,05	0,10
ВТ1-0		0,70	–	–	–	–	–	0,10	0,25	0,20	0,010	0,04	0,07	0,30
ПТ-1М		0,2 — 0,7	–	–	0,30	–	–	0,10	0,20	0,12	0,006	0,04	0,07	0,30
ПТ-7М		1,82 — 2,5	–	–	2,02 — 3,0	–	–	≤0,12	≤0,25	≤0,15	≤0,006	≤0,04	≤0,10	≤0,30
ПТ-3В		3,52 — 5,0	1,22 — 2,5	–	≤0,12	–	–	≤0,12	≤0,25	≤0,15	≤0,006	≤0,04	≤0,10	≤0,30

9.4.3 Mechanical and technological properties.

9.4.3.1 Titanium alloys for ship's piping systems are classed by a strength level as follows:

ВТ1-00 and ВТ1-0, ПТ-1М — yield stress ≥ 200 MPa;

ПТ-7М — yield stress ≥ 400 MPa;

ПТ-3В — yield stress ≥ 600 MPa.

The mechanical properties of pipes of titanium alloys shall meet the requirements of the Register-approved standards and/or technical documentation.

9.4.3.2 Pipes shall be subjected to the following tests during manufacture:

tensile test according to 2.2.2 (with determination of tensile strength, yield stress and elongation);

tensile test at elevated temperature (with determination of tensile strength and yield stress);

flattening test according to 2.2.5.2;

drift expanding test (except hot-formed and finned pipes);

toughness test (for hot-formed pipes) according to 2.2.3.1;

determination of hydrogen content by the manufacturer's normative documentation;

determination of nitrogen content (for welded pipes) by the manufacturer's normative documentation;

ultrasonic testing for defects by the manufacturer's normative documentation.

9.4.3.3 Mechanical properties.

The mechanical properties of pipes are given in Tables 9.4.3.3-1 — 9.4.3.3-4.

Table 9.4.3.3-1

Mechanical properties of cold-formed pipes of titanium alloys

Alloy grade	Tensile strength R_m, MPa	Proof stress, $R_{p0,2}$, MPa	Elongation, A_5, %	Tensile strength R_m, MPa	Proof stress $R_{p0,2}$, MPa	Tensile strength R_m, MPa	Proof stress $R_{p0,2}$, MPa
	min.						
	at temperature of 20 °C			at temperature of 150 °C		at temperature of 350 °C	
ВТ1-0	353 — 569	245	24	216	147	–	–
ПТ-1М	353 — 569	216	27	225	157	–	–
ПТ-7М	480 — 667	382	20			245	176

Table 9.4.3.3-2

Mechanical properties of hot-formed pipes of titanium alloys

Alloy grade	Tensile strength R_m, MPa	Proof stress $R_{p0,2}$, MPa	Elongation A_5, %	Reduction in area, Z, %	Impact toughness KCU, kJ/m^2	Tensile strength R_m, MPa	Proof stress $R_{p0,2}$, MPa	Tensile strength, R_m, MPa	Proof stress $R_{p0,2}$, MPa
	min.								
	at temperature of 20 °C					at temperature of 150 °C		at temperature of 350 °C	
ПТ-1М	343 — 539	245	24	45	784	215	147		
ПТ-7М	470 — 666	372	18	36	784			235	176
ПТ-3В	686 — 863	588	10	30	637			343	294

Table 9.4.3.3-3

Mechanical properties of cold-formed (finned and small-diameter) pipes of titanium alloys

Alloy grade	Tensile strength R_m, MPa	Proof stress $R_{p0,2}$, MPa	Elongation A_5, %	Tensile strength R_m, MPa	Proof stress $R_{p0,2}$, MPa
		min.			
	at temperature 20 °C			at temperature 350 °C	
ВТ1-00	294 — 490	–	30	–	–
ПТ-7М	480 — 667	373	20	235	176

Table 9.4.3.3-4

Mechanical properties of cold-formed pipes of titanium alloys (including with spiral ribs) with ultrafine grained structure

Alloy grade	Tensile strength R_m, MPa	Proof stress $R_{p0,2}$, MPa	Elongation A_5, %	Tensile strength R_m, MPa	Proof stress $R_{p0,2}$, MPa
		min.			
	at temperature of 20 °C			at temperature of 350 °C	
ПТ-7М	580 — 770	430	20	345	220

9.4.4 Condition of supply.

Pipes shall be supplied annealed and without heat treatment. The condition of supply shall be indicated in the Manufacturer's Certificate of Quality. The condition of supply is specified by the RS-agreed standards, and/or the Register-approved technical documentation. The type and conditions of heat treatment are specified by the pipes manufacturer.

9.4.5 Sampling.

The samples for making test specimens shall be taken from the ends of pipes. Where the test shall be executed on two specimens, the samples shall be taken from both ends.

9.4.6 Number of tests.

Titanium alloys for ship's piping systems are classed by the strength level as follows.

Titanium pipes shall be tested in batches. The batch shall comprise the pipes of one alloy grade, the same dimensions, heat and thermal treatment.

The number of pipes in the batch shall be the following:

350 pieces for cold-formed pipes;

75 pieces for hot-formed pipes.

The tests shall be carried out on at least 5 % of pipes in the batch, but not less than on two pipes.

From each pipe prepared for testing shall be taken:

one specimen from either end of the pipe: for determining the fraction of a total mass of hydrogen;

one specimen from each end of the pipe: for tensile test at room temperature;

one specimen from each end of the pipe: for tensile test at elevated temperature;

one specimen from each end of the pipe: for flattening;

one specimen from either end of the pipe with ultrafine grained structure for preparing a transverse section and structure control;

one specimen from either end of the cold-formed pipe: for flaring.

Every pipe in the batch shall be subjected to ultrasonic testing for defects.

All pipes shall be tested by hydraulic pressure. The test pressure is specified by the standards for pipes or the Register-approved documentation.

The hydraulic tests may be omitted, if each pipe is subjected to ultrasonic or another equivalent testing.

9.4.7 Inspection.

Every pipe is subject to visual examination. The pipe surface shall be free of any oil and dirt traces, cracks, scores, skins, deep dents, scale residue, laps, pickling rash, and deep lines.

The defects like fine lines, scratches, roughness, dents are acceptable if their depth is within the minus deviations for a wall thickness.

9.4.8 Marking and documents.

Identification, marking and issued documentation shall comply with 1.4.

9.5 CAST TITANIUM ALLOYS

9.5.1 General.

The requirements of this Chapter apply to the parts and structures of cast titanium alloys used in hull and ship machinery structures.

9.5.2 Chemical composition and mechanical properties.

The chemical composition of cast titanium alloys shall meet the requirements in Table 9.5.2. Possibility of using alloys with the other chemical composition and mechanical properties than those above shall be determined in accordance with 9.1.2.

Table 9.5.2

Alloy grade	Basic components, %			Impurities, %, max							Other impurities in total, %
	Al	V	B	O	H	N	C	Fe	Si	V	
ТЛ3	3,0 — 4,5	1,5 — 2,5	0,0020 — 0,0060	0,15	0,008	0,04	0,15	0,25	0,12	0,15	0,50
ТЛ5	3,5 — 5,0	–	0,0020 — 0,0060		0,008	0,04	0,15	0,25	0,12	–	0,50

N o t e s : 1. The fraction of total vanadium mass in 3 alloy castings not subjected to oxidation may be up to 0,4 %.
2. Other impurities may include molybdenum, manganese, chromium, tin, zirconium, niobium, nickel and copper.
The boron (B) content other than the specified in the Table is acceptable if the requirements for mechanical properties are met.

9.5.3 Mechanical properties.

The mechanical properties of casting titanium alloys shall meet the requirements in Table 9.5.3.

Table 9.5.3

Mechanical properties of cast titanium alloys

Alloy grade	Yield stress $R_{p0,2}$, MPa, min.	Tensile strength R_m, MPa, min.	Elongation %, min.	Impact toughness, kJ/m^2	
				KCU	*KCV*
ТЛ3	440	490	10	688	392
ТЛ5	590	640	8	490	294

9.5.4 Condition of supply.

The requirements for condition of supply shall comply with 9.2.4.

9.5.5 Sampling.

The samples for determination of chemical composition and mechanical properties may be cast to the casting or cast separately. The sample size shall be equal or exceed the least one of the casting crosssections available. The sample locations and their number shall be specified by the manufacturer and agreed with the Register.

9.5.6 Requirements for casting surface.

Titanium alloy castings, depending on their purpose and operational conditions, are divided into five groups. The required group shall be indicated in the order. If that is lacking, the requirements for surface shall be agreed between a customer and manufacturer.

When the ceramic forms of fireproof oxides are used for manufacture of titanium alloy castings, a hardened layer is formed on their surface. The depth of such layer depends on the wall thickness and mass of the casting. The layer shall be removed:

for I to III group castings — during cleaning their surface with shot-blasting;

for IV and V group castings — by machining or any other way.

The hardened layer shall be removed from the surface of the casting of any group in way of welding, welding-on, built-up welding or welding-in.

The castings of all the groups shall be chipped and cleaned of molding sand mixture remains, and risers, gates, test strips and flashes shall be removed.

9.5.7 Scope of tests and control methods.

The list of checking operations and of the types of tests is established depending on the casting group, the requirements of a drawing and is specified according to Table 9.5.7.

Every casting shall be subjected to external examination and dimensions checking.

The chemical composition and mechanical properties shall be determined for the alloy of every heat.

The content of the impurities of iron, silicon, molybdenum, manganese, chromium, copper, nickel, tin, zirconium, niobium is not determined, and secured by the castings manufacturer in compliance with the requirements in Table 9.5.2.1.

Table 9.5.7

Types of mandatory tests and inspection of castings	Group of castings				
	I	II	III	IV	V
External examination	+	+	+	+	+
Check of dimensions	+	+	+	+	+
Determination of chemical composition	+	+	+	+	+
Determination of mechanical properties	–	+	+	+	+
Dye penetrant testing	+	+	+	+	+
Radiographic testing	–	–	+	+	+

The parts of the casting of any group prepared for welding, welding-on or built-up welding, as well as all the parts prepared for eliminating all kinds of defects with welding shall be subjected to dye penetrant testing.

The following shall be subjected to radiographic testing:

parts of castings prepared for welding, welding-on and built-up welding;

casting areas being friction surfaces and sealing surfaces;

places of welding, welding-on and built-up welding, and also places of eliminating defects by welding; areas of group II castings shown in a drawing, and all areas of group III, IV and V castings accessible for checking.

The additional tests of castings are carried out if the relevant instructions are given in the order and/or drawing.

9.5.8 Inspection.

The castings submitted for examination shall be cleaned and be free of gates, risers and burrs. They shall have no defects adversely affecting their intended use.

The surface defects within the tolerances for dimensions may be acceptable or be eliminated by machining. When eliminating the defects, which dimensions exceed the permissible values specified by normative documentation, the former shall be removed by welding. The procedure for welding titanium alloy castings shall be approved by the Register.

9.5.9 Marking and documentation.

9.5.9.1 The requirements for marking and the documentation issued for castings shall comply with 1.4. The marking shall be made in places specified in a drawing and supplemented with the year of casting manufacture.

Test strips (samples for determination of chemical composition and mechanical properties) shall be marked before their separation from the casting.

9.6 STEEL-TITANIUM LAMINATED COMPOSITE MATERIAL

9.6.1 General requirements.

9.6.1.1 The present requirements apply to semi-finished products of steel-titanium laminated composite material (steel-titanium semi-finished products) intended for the ship machinery structures (condensers and heat exchangers) subject to the technical supervision by the Register in accordance with the requirements of other parts of the Rules.

9.6.1.2 Steel-titanium semi-finished products shall be manufactured in compliance with the documentation approved by the Register at the enterprises recognized by the Register based on the requirements given in 1.3 and under technical supervision by the Register.

The Register representative performing technical supervision at the manufacturer of steel-titanium semi-finished products with no metallurgical production of all the composite material components shall be provided with the Manufacturer's Certificates for basic materials and the Register Certificates for basic materials. The Register may also require data to confirm the possibility of using steel-titanium semifinished products during the service.

9.6.1.3 Steel-titanium semi-finished products may be manufactured by explosion welding, hot rolling or other manufacturing methods.

9.6.1.4 Steel-titanium semi-finished products shall be manufactured not using cold rolling as final operation to obtain the required thickness.

9.6.1.5 Hull structural steel, which complies with the requirements of 3.2, or steel complying the national/international standards, the application of which is agreed with the Register (the standards are specified in the approved documentation), is generally used as the base metal (steel) layer of steel-titanium semi-finished products.

9.6.1.6 Rolled plate and strip products of wrought steel-titanium alloys in annealed condition, which comply with the requirements of 9.2, are used as titanium layer of steel-titanium semi-finished products.

9.6.1.7 In general, rolled steel and titanium for steel-titanium semi-finished products shall be manufactured by the enterprises recognized in accordance with 1.3 and under technical supervision by the Register.

9.6.2 Chemical composition and mechanical properties.

9.6.2.1 The chemical composition and mechanical properties of basic materials as well as properties of steel-titanium semi-finished products shall comply with the documentation approved by the Register. The chemical composition and mechanical properties of base materials intended for manufacture of steel- titanium semi-finished product shall comply with the requirements of 3.2 or national/international standards (refer to 9.6.1.5) and 9.2.

9.6.2.2 Condition of supply.

9.6.2.2.1 Steel-titanium semi-finished products shall be supplied in the condition complying with the RS-approved documentation.

9.6.2.3 Scope of testing.

9.6.2.3.1 The scope of testing and sampling of basic materials, steel and titanium alloys for steel-titanium semi-finished products shall be in accordance with the requirements of 3.2 or national/ international standards (refer to 9.6.1.5) and 9.2, accordingly.

9.6.2.3.2 During the initial survey for recognition of steel-titanium semi-finished product manufacture by the Register according to 1.3, the scope of prototype testing shall be based on the program developed by the manufacturer of steel-titanium semi-finished product and approved by the Register. The control test program at manufacturer's recognition shall include the following tests:

pull-off and shear tests to determine adhesion of test specimen layers in composite titanium-steel material;

bend tests to determine plybond strength of test specimen layers in composite steel-titanium material;

microanalysis of metal in the layer interface zone of composite steel-titanium material.

Tests shall be carried out on a control batch. For each manufacturing process stated (the same basic material supplier, the same size, the same condition of supply), 2 semi-finished products of a batch shall be submitted for testing.

Each semi-finished product of the control batch shall be subject to visual and ultrasonic testing to determine layer discontinuity zone.

9.6.2.3.3 During manufacture, the scope of testing shall be determined on the basis of the material delivery documentation approved by the Register or the national/international standard recognized by the Register. Semi-finished products shall be submitted for testing in batches. A batch shall consist of semifinished products of the same condition of supply, the same size, manufactured by the same process and using basic materials received from the same supplier. In general, not less than 10 % of semi-finished products shall be taken.

From each semi-finished product submitted for testing, samples shall be taken for pull-off and shear tests to determine layer adhesion.

Each semi-finished product in the batch shall be subject to visual and ultrasonic testing to determine layer discontinuity zones.

9.6.2.3.4 Sampling and testing.

9.6.2.3.4.1 The samples shall be taken at a distance not less than 25 mm from the edge of the semifinished product, at the farthest possible location from the explosion initiation point.

9.6.2.3.4.2 Bend tests to determine plybond strength of test specimen layers in composite steel-titanium material.

Bend test of bimetallic specimens at an angle of 80° shall be performed for the qualitative assessment of steel and titanium layer plybond strength. No layer separation during bending shall be a performance criterion. Two test specimens shall be taken from a sample for bend test. One bend test shall be carried out with the specimen of the titanium layer on the tensioned side and the other one with the specimen of the titanium layer on the compressed side. The procedure for test specimens' preparation and test performance shall comply with the manufacturer's documentation approved by the Register, RS-agreed national and/ or international standards.

9.6.2.3.4.3 Pull-off and shear tests of steel-titanium semi-finished product layers.

9.6.2.3.4.3.1 Pull-off and shear tests of steel-titanium semi-finished product layers obtained by explosion welding.

The tests shall be carried out on one specimen of each type (pull-off and shear tests).

Pull-off and shear tests shall be carried out at the room temperature.

The procedures of pull-off and shear tests are similar to those for aluminium-steel semi-finished product (5.3).

Pull-off tests shall be carried out on specimens as shown in Fig. 5.3.2.3.4.3.2-1.

Shear tests shall be carried out on specimens as shown in Fig. 5.3.2.3.4.3.2-2.

For all the specimens tested, the ultimate pull-off and shear strength shall comply with the documentation approved by the Register.

Where the ultimate pull-off or shear strength of a laminated composite material is below the specified minimum, two additional pull-off and shear tests specimens shall be tested.

Each new value shall not be less than the specified minimum value.

Where the ultimate pull-off or shear strength of a laminated composite material is below the specified minimum value but exceeds 70 % of the minimum value, two additional pull-off and shear test specimens taken from each end of the semi-finished product shall be tested.

Each new value shall not be less than the specified minimum value.

9.6.2.3.4.4 Visual and non-destructive testing.

9.6.2.3.4.4.1 Each steel-titanium semi-finished product shall be subject to 100 % visual testing and ultrasonic testing to determine layer discontinuity zones.

9.6.2.3.4.4.2 The layer adhesion quality shall be determined by ultrasonic testing based on approved assessment criteria.

9.6.2.3.4.4.3 Micro structural analysis of interface between titanium and steel layers of steel-titanium semi-finished products.

Manufacturer shall submit the photos of interface surface between the layers of composite material with × (10 ÷ 20) and × 100 magnification. Microstructural analysis shall be made on the sections cutout of the samples for mechanical tests.

9.6.3 Inspection.

9.6.3.1 All steel-titanium semi-finished products shall undergo surface inspection. Absence of defects not permitted under delivery documentation approved by the Register shall be guaranteed by the manufacturer, with a relevant entry to be made in the Manufacturer's Certificate. The surface defects resulting from manufacturing procedure are permitted if their depth is within the negative deviations specified in the documentation.

It is allowed to rectify the detected surface defects by grinding or flogging, provided these corrections do not change the size of the semi-finished product out of the allowed tolerances. For steel-titanium semifinished products, repairing of surface defects of steel and titanium layers is not permitted.

9.6.4 Marking.

9.6.4.1 The basic requirements for marking are set forth in 1.4.

Every semi-finished product shall have manufacturer's marking and the Register stamp clearly made in the specified manner and in a due place.

The marking shall include, as a minimum:

name and/or designation of the manufacturer;

grades of titanium alloy and steel;

condition of supply;

number of a batch, semi-finished product or identification number according to manufacturer's system, which allows tracing complete production process.

If the semi-finished products are delivered in bundles, the marking may be made on tags.

9.6.5 Documents.

9.6.5.1 If supply is provided by piece, every batch of semi-finished product, which has undergone testing shall be provided with the Register certificate. The Register certificate shall include, as a minimum:

order number;

construction project number, if known;

name, number, dimensions and mass of a semi-finished product;

grades of titanium alloy and steel, standards for supply;

condition of supply;

number of a batch or a semi-finished product or identification number, which allows identifying the supplied material.

The Register certificate shall be compulsorily supplemented with the results of the chemical analysis and mechanical tests, which confirm the material conformity with the Register requirements (the supplement may be Manufacturer's Certificate and/or test reports).

9.6.6 Welding of semi-finished products of steel-titanium laminated composite material.

9.6.6.1 Welded joints of steel-titanium semi-finished products to steel and titanium hull structural members shall be made by separate welding of layers between similar materials using fillet, overlap or butt welds.

9.6.6.2 Welding processes shall be approved in accordance with Sections 2 and 4 (2.13 and 4.10), Part XIV "Welding", as well as Section 8, Part III "Technical Supervision During Manufacture of Materials" of the Rules for Technical Supervision during Construction of Ships and Manufacture of Materials and Products for Ships.

10 MATERIALS USED FOR CARGO CONTAINMENT SYSTEMS OF GAS CARRIERS

10.1 GENERAL REQUIREMENTS

10.1.1 These requirements apply to the metallic and non-metallic materials used for cargo-containment systems of gas carriers.

In accordance with 1.1.4, all materials and products mentioned in this Section shall be manufactured at the enterprises recognized by the Register and under the Register technical supervision. The materials and products shall comply with the technical documentation agreed with the Register.

Requirements for the selection and application of the materials and products are specified in the relevant parts of the Rules.

10.1.2 Identification, marking and issued documentation for materials shall comply with 1.4.

10.2 METALLIC MATERIALS FOR CARGO CONTAINMENT SYSTEMS OF GAS CARRIERS

10.2.1 Corrosion-resistant (stainless) steel for cargo containment systems of gas carriers.

10.2.1.1 These requirements apply to the steel used for cargo containment systems of gas carriers. Chemical composition, mechanical properties, condition of supply, sampling, scope of sampling and test procedures for steel used shall comply with the technical documentation agreed with the Register. In general, corrosion-resistant steel shall comply with the requirements of 3.16.1.3; 3.16.1.5 and 3.16.1.10.

Welding consumables and welding procedures are also subject to the Register approval and shall comply with the technical documentation agreed with the Register.

10.2.2 Ferronickel alloy (36 % Ni) for cargo containment system of gas carriers.

10.2.2.1 These requirements apply to the ferronickel alloy (36 % Ni) also called Invar, which is used for cargo containment systems of gas carriers. Chemical composition, mechanical properties, condition of supply, sampling, scope of sampling and test procedures for alloy used shall comply with the technical documentation agreed with the Register.

Welding consumables and welding procedures are also subject to the Register approval and shall comply with the technical documentation agreed with the Register.

10.2.3 1550, 1565ч, 5083 wrought aluminium alloys.

10.2.3.1 These requirements apply to 1550, 1565ч, 5083 wrought aluminium alloys to be used for cargo containment systems of gas carriers. Chemical composition, mechanical properties, condition of supply, sampling and scope of testing for the alloys used shall comply with the technical documentation agreed with the Register. Wrought aluminium alloys 1550, 1565ч, 5083 shall meet the requirements of Chapter 5.

Welding consumables and welding procedures are also subject to the Register approval and shall comply with the technical documentation agreed with the Register.

10.3 PLYWOOD

10.3.1 General requirements.

10.3.1.1 These requirements apply to the plywood sheets used in thermal insulation panels and boxes of cargo tanks in gas carriers with membrane systems of cargo containment.

10.3.1.2 The plywood shall be manufactured, stored and supplied in compliance with the standards agreed for application with the Register and technical requirements of firms. The Register may require for surveys of the suppliers of basic materials for plywood manufacture to be carried out.

10.3.2 Properties.

10.3.2.1 As raw materials for plywood manufacture, birch timber shall be used. The plywood sheets shall not warp in service.

For sealing and fastening elements of thermal insulation structures, application of plywood made of hard timbers (beech, ash etc.) is permitted if provided in the technological procedure used by the designer of the cargo tank insulation system.

10.3.2.2 Plywood physical properties and scope of testing shall comply with the requirements of the technical documentation agreed with the Register. Safe plywood performance shall be confirmed by the relevant national/international standards.

10.4 GLASS WOOL

10.4.1 General requirements.

10.4.1.1 These requirements apply to the materials used to fill in the joints between thermal insulation panels of cargo tanks in gas carriers.

10.4.2 Properties.

10.4.2.1 The material shall not change its properties when exposed to sea water, nitrogen and liquefied natural gas. The material shall not cause corrosion in contacting metallic surfaces. The maximum thermal conductivity coefficient shall not to exceed 0,35 W/m·°C at 20 °C. The physical and chemical properties of glass wool, scope of testing and laying-up procedure shall comply with the technical documentation agreed with the Register.

10.5 GLASS FIBRE USED IN GAS CARRIER MEMBRANES

10.5.1 General requirements.

10.5.1.1 These requirements apply to the materials used at the edges of membrane parts and beneath top bridge pads of the primary membrane.

10.5.2 Properties.

10.5.2.1 Glass fibre used in membranes shall be tested for compatibility with glue and adhesive compounds.

10.5.2.2 Physical and chemical properties of glass fibre and scope of testing shall comply with the technical documentation agreed with the Register.

10.6 RUBBER TECHNICAL GOODS

10.6.1 General requirements.

10.6.1.1 These requirements apply to the materials used for the thermal insulation of gas carrier membranes.

10.6.2 Reinforced polyurethane foam (R-PUF).

10.6.2.1 Reinforced polyurethane foam is used in thermal insulation panels.

10.6.2.1.1 Properties.

10.6.2.1.1.1 The material shall comply with the following requirements:

retain its properties at –163 °C;

be chemically compatible with liquefied natural gas, sea water and nitrogen-ammonia mixture;

retain its properties under pressure variations due to cargo displacement;

retain its properties under pressure variations up to the absolute value of 200 mbar;

retain its properties during expected service life of the ship.

10.6.2.1.1.2 The physical and chemical properties of reinforced polyurethane and scope of testing shall comply with the technical documentation agreed with the Register.

10.6.3 Low-density foam (LDF).

10.6.3.1 Low-density foam (LDF) is used to fill in the spaces between corner panel components and holes in reinforced polyurethane panels.

10.6.3.1.1 Properties.

10.6.3.1.1.1 Low-density foam (LDF) shall be tested for compatibility with reinforced polyurethane foam, load bearing mastic and adhesion compounds:

shall retain its properties at –163 °C;

shall be chemically compatible with liquefied natural gas, sea water and nitrogen-ammonia mixture.

10.6.3.1.1.2 The physical and chemical properties of low-density foam (LDF) and scope of testing shall comply with the technical documentation agreed with the Register.

10.7 PERLITE (VOLCANIC GLASS)

10.7.1 General requirements.

10.7.1.1 These requirements apply to the materials used for the manufacture of thermal insulation systems for cargo tanks of gas carriers.

Perlite is used as filler material in thermal insulation systems between membrane layers. Perlite shall be treated with water-repellent silicone.

10.7.1.2 The physical and chemical properties of perlite and scope of testing shall comply with the technical documentation agreed with the Register.

10.8 ANTI-STICKING FILM

10.8.1 General requirements.

10.8.1.1 These requirements apply to the material between the inner hull and load bearing mastic in the systems where Invar membranes are used.

This film is a flexible material used to prevent the load bearing mastic sticking to the gas carrier hull. It is recommended that non-combustible kraft paper with a specific weight of 0,07 kg/m^2 be used as the film.

The physical and chemical properties and scope of testing shall comply with the technical documentation agreed with the Register.

10.9 MASTICS, ADHESIVES, PAINT COATINGS

10.9.1 Load bearing mastic.

10.9.1.1 General requirements.

10.9.1.1.1 The mastic in the form of straps shall be applied to the plywood surface of the thermal insulation panel and serves as an additional fixation of the secondary thermal insulation panel to the hull and as an aligner as well as an adhesive for plugs and for pressure propagation from the corner panels.

10.9.1.2 Properties.

10.9.1.2.1 Generally, the material is epoxy-based mastic consisting mainly of two components:

rubber (with or without a filler);

hardener (with or without a filler).

The material shall not warp under compression and shall be compatible with sea water.

10.9.1.2.2 The physical and chemical properties of the load bearing mastic and scope of testing shall comply with the technical documentation agreed with the Register.

10.9.1.3 For material supplied to the shipyard, operating instructions shall be provided containing the following:

storage conditions: temperature range and storage time;

mixing proportions with permissible deviations;

dependence of temperature range necessary to obtain the required properties on time;

dependence of mastic usability on climatic conditions;

dependence of mastic usability on compression time.

10.9.2 Insulation panel adhesive.

10.9.2.1 General requirements.

10.9.2.1.1 The material is used in membrane systems when manufacturing flat thermal insulation panels, corner panels, gluing hard cellular materials, gluing hard cellular materials to plywood and triplex as well as gluing triplex to plywood.

10.9.2.2 Properties.

10.9.2.2.1 The material is a mixture of rubber and hardener and may contain particular fillers. The material shall be compatible with sea water, gaseous methane and nitrogen-ammonia mixture. Durability shall be at least 40 years.

10.9.2.2.2 The physical and chemical properties of the adhesive and scope of testing shall comply with the technical documentation agreed with the Register.

10.9.2.3 For material supplied to the shipyard, operating instructions shall be provided containing the following:

storage conditions: temperature range and storage time;

mixing proportions with permissible deviations;

dependence of temperature range necessary to obtain the required properties on time;

dependence of mastic usability on climatic conditions;

dependence of mastic usability on compression time.

10.9.3 Secondary barrier adhesive.

10.9.3.1 General requirements.

10.9.3.1.1 The material is used in membrane systems when manufacturing flat thermal insulation panels, during intermediate thermal insulation box assembly and for gluing the flexible secondary barrier to the rigid one.

10.9.3.2 Properties.

10.9.3.2.1 The material is a mixture of rubber and hardener and may contain particular fillers. The material shall be compatible with sea water, gaseous methane and nitrogen-ammonia mixture.

10.9.3.2.2 The physical and chemical properties of the adhesive and scope of testing shall comply with the technical documentation agreed with the Register.

10.9.4 Inner hull protection coating.

10.9.4.1 General requirements.

10.9.4.1.1 The material is used for painting the inner surface of hull in way of cargo tanks equipped with membrane systems. Insulation panels of these systems are fixed to the hull with load bearing mastic and studs.

To ensure better adhesion, the inner surface of hull shall be made free of rust and foreign particles, and painted.

The coating shall have the following properties:

be able to transfer a load between thermal insulation panels and inner hull;

be compatible with load bearing mastic (epoxy or polyurethane) and sea water;

allow stud welding to the coating;

in case of welding on the coating, not adversely affect the weld quality.

10.9.4.1.2 The physical and chemical properties of the material and scope of testing shall comply with the technical documentation agreed with the Register.

11 ADDITIVE MANUFACTURING PRODUCTS

11.1 GENERAL

11.1.1 The requirements of this Section apply to semi-finished products, finished products and alternative products obtained by additive synthesis methods and used for manufacturing of hull structural members, parts of machinery, arrangements/gearing and other ship's components, being items of the Register technical supervision in accordance with the RS Nomenclature.

11.1.2 In accordance with 1.1.4, all the products specified in this Section shall be manufactured at the firms recognized according to 1.3.1.2.

11.1.3 The requirements of this Section apply to the products from metallic materials.

11.1.4 Application of additive synthesis methods and materials of the nature other than that described in this Section may be allowed by the Register after examination under RS technical supervision. The examinations are carried out is performed to determine product performance and their scope shall be specified by the customer's requirements. The product may be allowed in accordance with 2.4.1.3 of Part III "Technical supervision during manufacture of materials" of the Rules for Technical Supervision during Construction of Ships and Manufacture of Materials and Products for Ships.

11.2 DEFINITIONS AND EXPLANATIONS

11.2.1 The following definitions and explanations have been adopted in this Section of the Rules.

Additive manufacturing (AM), additive synthesis means a process of manufacture of semi-manufactured products, items and other products based on creation of a physical object from an electronic geometric model by adding material, generally layer upon layer, alternatively to subtractive production (machining) and conventional forming production (casting, stamping).

An additive product means a semi-manufactured product, item and other product resulting from addition production.

A precursor means an ingoing forming material in a state preceding the additive product synthesis.

A prototype means a semi-manufactured product or a product obtained using the methods described in other sections of the RS Rules. Inter alia, prototypes include: hot-rolled products, stampings, castings, forgings, etc. A semi-manufactured product manufactured in compliance with national and international standards may also be a prototype.

11.3 METAL ADDITIVE PRODUCTS

11.3.1 General.

11.3.1.1 The present requirements cover metal semi-manufactured articles, end products of ship's arrangements and ship machine-building components from metals produced using additive manufacturing methods.

Metal powder, welding wire or strip may be used as precursors. Most commonly, heat input required for the synthesis is supplied by laser beam, electronic beam, plasma, electric arc or other ways.

11.3.1.2 This Chapter contains the requirements for additive product material pertaining to scope of required tests, delivery characteristics and surface condition.

11.3.1.3 Selection of the particular applicable type of metal for manufacture of additive products is within the manufacturer's responsibility. Correctness of selection shall be verified by the tests specified in this Chapter.

11.3.1.4 Material grade designation shall be maintained in compliance with national and international standards.

11.3.2 Production.

11.3.2.1 Additive products are manufactured according to specifications, technical conditions, standards or other normative documents, which the supply complies with.

11.3.2.2 RS recognition of additive products manufacturers shall be carried out in compliance with 2.1, Part III "Technical Supervision during Manufacture of Materials" of the Rules for Technical Supervision during Construction of Ships and Manufacture of Materials and Products for Ships. Scope of application of the issued Recognition Certificate for Manufacturer covers the surveyed metals and additive synthesis methods. Furthermore, apart from the requirements of other sections of the Rules, the Certificate shall contain the following:

types (steel, titanium or other alloys, compositions, etc.);

kinds (carbon steel, corrosion-resistant steel, etc.)

classes and grades (categories) (AF-7, BT6, etc.);

synthesis method (selective laser melting, selective laser sintering, etc.);

types of precursors applied;

maximum overall dimensions of the product.

11.3.2.3 The manufacturer's responsibility shall be determined by the normative document for supply and shall ensure compliance of additive manufacturing and additive product properties with the specified requirements of the normative document and these Rules. Where occurrences of product quality index reduction are detected by control system, the manufacturer shall identify them and take appropriate measures for prevention thereof. Report on performed investigations and appropriate actions shall be submitted to the Register.

11.3.2.4 During the manufacturer survey, normative documentation regulating the procedures of production process, such as applied radiated power, rebuild welding rate, etc. shall be submitted. In compliance with the requirements of 11.3.2.3, the manufacturer is responsible for further observation of all specified processing methods during the additive product manufacture. The relevant records shall be controlled by the manufacturer and submitted to the RS representative during the survey.

Deviations from the established synthesis procedures may be permitted provided that the quality of manufactured products meets the requirements to product materials. The identified deviations shall be agreed with the consumer.

11.3.2.5 Synthesis of additive products shall be performed using metal powder, combination of welding wire with gas or inert gas, combination of welding wire or strip and flux. Chemical composition of precursors shall be controlled by the manufacturer of the additive product by verifying the compliance of international and national standards, technical conditions, technical requirements, specifications or other normative documents.

When precursors are manufactured at one firm, and the additive product synthesis is carried out at another firm, a Manufacturer's Certificate specifying the manufacturer, method of manufacture, batch number, chemical composition and granulometric composition for powder material shall be submitted to the surveyor.

11.3.2.6 Each precursor batch shall be subjected to incoming inspection by the following parameters:

check of accompanying documentation (Manufacturer's Certificate);

check of packing;

check of chemical composition including gases;

check of powder granulometric composition, where applicable;

check of powder pour density and plastic yield, where applicable;

check of mechanical properties;

check of intergranular corrosion resistance (for corrosion-resistant materials);

control of ferritic phase content (for austenitic corrosion-resistant materials).

Determination of chemical and granulometric composition, pour density and plastic yield of powder shall be carried out in accordance with the procedures that shall be included in the test program approved by the Register. Incoming inspection shall be carried out at the most one month prior to the additive manufacturing start.

11.3.2.7 Incoming inspection of welding wire, strip and flux applied for manufacture of additive products shall be carried out in compliance with the requirements of Section 4, Part XIV "Welding" or national and international standards approved by RS for application.

11.3.2.8 Procedures of tensile test, impact test, metallographic examination, tests for intergranular, pitting and crevice corrosion resistance, α-phase determination, etc. of additive product material shall comply with the requirements of Section 2 and/or national and international standards accepted by RS for application.

11.3.2.9 While selecting precursor material grade, the selection of these materials shall be substantiated with respect to obtaining the required performance properties based on the product functionality and the requirements of applicable sections of this Part for prototypes and/or documents for supply for chemical composition of the prototypes.

11.3.2.10 During the approval of the requirements to mechanical properties of additive product material by the Register, the requirements of the Rules for prototypes and/or documents for supply, as well as the requirements specifying by the product purpose in respect of the minimum operating temperature, possible exposure to corrosive environment, cycling of operating loads and other operating conditions shall be taken into consideration.

11.3.2.11 Selection of the condition of supply shall be determined by the required quality of additive product that ensure obtaining of mechanical properties, in its turn determined by documents for supply. Unless stated otherwise, the following supply conditions are permitted:

in the condition without heat treatment;

homogenizing annealing;

annealing;

heat refining (quenching and tempering).

Parameters of additional heat treatment shall be included in documentation regulating the procedures of production process.

11.3.3 Sampling.

11.3.3.1 Specimens for testing shall be taken from extension to the additive product body. The procedure of sampling and specimen cutting out shall be specified in design documentation and/or test program approved by the Register.

For scheduled testing and control, additive synthesis of specimens separate from the product is permitted. Individual samples shall be manufactured from precursor of the same batch, using the same equipment and the same process parameters as the additive product. In this case, the dimensions of a specimen in thickness and diameter may differ from the maximum

dimensions of the additive product not more than by 25 % or with at least 1 mm of machining allowance, whichever is less.

Samples for test specimen shall be taken upon completion of all types of heat treatment.

Individual samples shall be subjected to heat treatment in one furnace charge with the additive product submitted for survey.

11.3.3.2 Dimensions of samples shall ensure performance of the required tests and possible retesting.

11.3.3.3 Specimens for mechanic testing and microstructure check, taking into consideration the possible properties anisotropy, shall be cut in two directions with respect to synthesis direction, i.e. longitudinal axes of specimens shall be parallel and perpendicular respectively to direction of the additive product growing.

11.3.4 Scope of testing.

11.3.4.1 Types of tests the additive products to be subjected to are given in Table 11.3.4.1. Tests to be carried out for supplies under the RS technical supervision are marked by "+".

Table 11.3.4.1

Types of additive product tests

Parameters	Types of materials		
	Low-alloyed steels	Corrosion-resistant steels	Titanium alloys
Chemical composition	+	+	+
Tensile tests at 20 °C:			
tensile strength R_m	+	+	+
yield stress $R_{0,2}$	+	+	+
elongation A_5	+	+	+
relative reduction Z	+	+	+
Fracture energy at impact bending at the minimum operating temperature	+	+	+
Microstructure check	+	+	+
α-phase control	–	+[1]	–
Intergranular corrosion resistance	–	+	–
Pitting and crevice corrosion resistance	–	+	–
Non-destructive testing	+	+	+
Note. Types of samples and testing procedures shall comply with the requirements of Section 2. [1] For austenitic steels prior to heat treatment.			

11.3.4.2 Additive products shall be submitted for testing in batches or in pieces. In case of survey of a batch of additive products, one product from the batch shall be subjected to mechanical tests. Each product of the batch shall be subjected to non-destructive testing.

The batch shall consist of additive products of the same name and range, manufactured from precursor of one batch, at the similar synthesis process parameters, and heat treatment shall be carried out in the same furnace charge. Batch size shall be also restricted by a total weight of additive products equal to 200 kg.

Additive products from low-alloyed steel intended for the use at operating temperatures below –30 °C shall be submitted for testing in pieces.

11.3.4.3 If not otherwise stated, a minimum number of specimens shall be made from one sample according to Table 11.3.4.3.

Table 11.3.4.3

Test type	Number of specimens
Determination of chemical composition	One
Tensile test	Three test specimens per each of two directions
Determination of impact energy	Three test specimens per each of two directions
Intergranular corrosion resistance	4 (two check samples)
Pitting corrosion and gap corrosion resistance	Three test specimens per each test type
Microstructure check	One specimen per two faces of cross section preparing

11.3.4.4 Retesting of additive product material shall be carried out in compliance with 1.3.2.3. In retesting the parameters having unsatisfactory results shall be determined. In this case the scope of testing shall be duplicated.

11.3.5 Non-destructive testing.

11.3.5.1 Non-destructive testing of the additive products shall be carried out using the following procedures:

visual testing and measuring;

radiographic testing;

where the requirements in the terms of supply are available — dye penetrant and ultrasonic testing.

Use and scope of other control methods shall be agreed with the consumer.

11.3.5.2 Non-destructive testing shall be carried out in compliance with IACS recommendations Nos. 68 and 69 accordingly to the selected prototypes, and/or national and international standards permitted for application by the Register.

11.3.6 Surface condition.

11.3.6.1 The surface quality of objects of additive products application shall comply with the requirements of design documentation and/or national and international standards.

The manufacturer is responsible for surface quality conformance of such objects. Manufacturer quality system shall ensure the required scope surface check preceding the product supply to the consumer. Where material surface defects are detected during the latter stages of manufacture, repair may be carried out in compliance with 11.3.6.2.3.

11.3.6.2 Acceptance criteria.

11.3.6.2.1 Acceptance criteria of the additive product shall be agreed with the consumer and presented in the documents for supply.

11.3.6.2.2 Cracks, flaw, delaminations, sharp edges and other visible surface defects, as well as preventing end use of the products require cutting-out or grinding with subsequent repair.

11.3.6.2.3 Surface defect elimination.

11.3.6.2.3.1 Grinding of defects without rebuild welding is acceptable under the following conditions:

elimination of surface defects by local grinding is permitted for the depth not exceeding 7 % of the nominal thickness, but not exceeding 3 mm;

the area of separate grinding zones shall not exceed 1 % of the total area of the additive product;

the total grinding area shall not exceed 2 % of the total area of the additive product;

In such a case, the defects located at the distance less than their average width from each other are considered as a single defect area;

Grinded surface shall have smooth transition to surrounding surface of the product. Complete elimination of the defect shall be verified by magnetic particle or by dye penetrant testing.

11.3.6.2.3.2 Surface reconditioning after defect elimination

Elimination of additive product defects by rebuilding shall be carried out using precursors of the same grade as the additive products manufactured.

Technology process of surface defect elimination by rebuilding shall be submitted to the Register for approval. Elimination of defects shall be accompanied by subsequent non-destructive testing.

11.3.7 Use of additive products.

11.3.7.1 For additive product manufacture by direct laser growing from powder materials, application of precursors complying with the requirements on chemical composition and mechanical properties specified in 11.3.7.2 and 11.3.7.3 is approved by the Register.

11.3.7.2 Chemical composition of additive product material manufactured by direct laser growing method from powder material shall meet the requirements of Table 11.3.7.2-1 for steel and Table 11.3.7.2-2 for titanium alloy.

Table 11.3.7.2-1

Grade of precursor material	C	Si	Mn	Cr	Ni	Mo	S	P	Al	Cu
							Not more than			
09ХН2МД	0,08 — 0,11	0,17 — 0,37	0,30 — 0,60	0,30 — 0,70	1,80 — 2,20	0,25 — 0,35	0,010	0,015	0,01 — 0,05	0,40 — 0,70
08ГДНФЛ	Not more than 0,10	0,15 — 0,40	0,60 — 1,00	Not more than 0,30	1,15 — 1,55	–	0,035	0,035	–	0,80 — 1,20
06Х15Н4ДМЛ	≤ 0,06	0,40	0,60-0,90	14,0 — 15,5	4,0 — 4,4	0,11 — 0,28	0,015	0,015	–	1,0 — 1,5

Table 11.3.7.2-2

Grade of precursor material	Ti	Alloying, %			Impurities, %, not more than					
ТЛ5	base	Al	V	B	O	H	N	C	Fe	Si
		3,5 — 5,0	1,5 — 2,5	0,002 — 0,006	0,15	0,008	0,04	0,15	0,25	0,12

11.3.7.3 Mechanical properties of additive product material manufactured by direct laser growing method from powder material shall meet the requirements of Table 11.3.7.3.

Table 11.3.7.3

Grade of precursor material	Yield stress, MPa,	Ultimate tensile strength, MPa	Elongation, %	Impact energy on test specimens *KV* / *KU*, J	
				t = 20 °C	*t* = –40 °C
	not less				
09ХН2МД	530	650	18	KV 78	KV 26
08ГДНФЛ	360	420	10	KU 56	KU 32
06Х15Н4ДМЛ	620	790	10	K 40	KV 32
ТЛ5	590	640	8	KV 30	KV 22

11.3.7.4 For additive products made by a method of direct laser growing from low-alloyed and corrosion-resistant steel and given in Table 11.3.7.4, heat treatment is mandatorily required. The recommended heat treatment procedures are given in Table 11.3.7.4.

The type and procedure of heat treatment shall be specified in a certificate for an additive product.

Table 11.3.7.4

Grade of precursor material	Heat treatment procedure
09ХН2МД	Homogenizing at *T* = 1100 °C, conditioning for 6 h, heating and cooling in a furnace Quenching at *T* = 920 °C, conditioning for 2 h, cooling in oil High tempering at *T* = 650 °C, conditioning for 5 h, cooling in the air
08ГДНФЛ	Homogenizing at *T* = 1100 °C, conditioning for 6 h, heating and cooling in a furnace Normalizing at *T* = 940 °C, conditioning for 2 h, cooling in the air Quenching at *T* = 940 °C, heating in a furnace, conditioning for 2 h, cooling in water High tempering at *T* = 640 °C, conditioning for 2 h, cooling in the air
06Х15Н4ДМЛ	Homogenizing at *T* = 1200 °C, conditioning for 6 h, heating in a furnace, cooling in the furnace up to 150°C, then in the air Quenching at *T* = 1060 °C, conditioning for 3 h, cooling in the air 1st high tempering at *T* = 625 °C, conditioning for 5 h, heating in a furnace, cooling in the air 2nd high tempering at *T* = 625 °C, conditioning for 5 h, heating in a furnace, cooling in the air 3rd high tempering at *T* = 625 °C, conditioning for 5 h, cooling in a furnace up to 150°C, then cooling in the air

11.3.7.5 Manufacture and delivery of additive products of other grades and/or using other synthesis methods under RS technical supervision may be carried out after performing a set of studies and tests according to the Program developed in accordance with the requirements of this Section and approved by the Register.

11.3.8 Marking and documents.

11.3.8.1 Identification, marking and the documents issued shall comply with the requirements of 1.4.

11.3.8.2 Each additive product shall be accompanied with the RS Certificate.

11.3.8.3 Each batch of precursor subject to subsequent application for the product shall be accompanied by the Manufacturer's Certificate.

Russian Maritime Register of Shipping

Rules for the Classification and Construction of Sea-Going Ships
Part XIII
Materials

FAI "Russian Maritime Register of Shipping"
8, Dvortsovaya Naberezhnaya,
191186, St. Petersburg,
Russian Federation
www.rs-class.org/en/