RUSSIAN MARITIME REGISTER OF SHIPPING

RULES

FOR THE CLASSIFICATION SURVEYS OF SHIPS IN SERVICE

ND No. 2-020101-012-E

St. Petersburg
2022

RULES FOR THE CLASSIFICATION SURVEYS OF SHIPS IN SERVICE

Rules for the Classification Surveys of Ships in Service of Russian Maritime Register of Shipping have been approved in accordance with the established approval procedure and come into force on 1 January 2022.

The present Rules are based on the latest version of the 2021 edition taking into account the amendments and additions introduced at the re-publication, as well as those further introduced as, and when, necessary by issuing new versions on the basis of circular letters or editorial amendments (refer to the Revision History).

The procedural requirements (PR), unified requirements (UR), unified interpretations (UI) and recommendations of the International Association of Classification Societies (IACS) and the relevant resolutions of the International Maritime Organization (IMO) have been taken into consideration in the Rules.

On the entry into force of these Rules, the Rules for the Classification Surveys of Ships in Service, 2021 become void.

The Rules are intended for surveyors, ship crews and shipowners.

The Annexes to the Rules are published separately.

In case of discrepancies between the Russian and English versions, the Russian version shall prevail.

© Russian Maritime Register of Shipping, 2022

REVISION HISTORY[1]

(purely editorial amendments are not included in the Revision History)

Amended paras/chapters/sections	Information on amendments	Number and date of the Circular Letter	Entry-into-force date
Part I, paras 3.1.3.7 and 3.1.3.8	New para 3.1.3.7 has been introduced containing the type of occasional surveys — survey on the initiative of the Register. Existing para 3.1.3.7 has been renumbered 3.1.3.8	340-04-1676c of 02.12.2021	01.01.2022
Part I, para 6.1.3	New para 6.1.3 has been introduced containing requirements for submission of documentation at acceptance of the ship into RS class	340-04-1676c of 02.12.2021	01.01.2022
Part I, para 6.3.9	Requirements have been specified with regard to deletion of term "outfitting"	340-04-1676c of 02.12.2021	01.01.2022
Part I, para 6.4.3	Requirements for operational documentation subject to RS approval have been specified	340-04-1676c of 02.12.2021	01.01.2022
Part I, para 7.1.3.2	New type of service with code 22028000 has been introduced in connection with coming into force of IACS UR Z17 (Rev.16 Aug 2021)	340-04-1650c of 25.10.2021	01.01.2022
Part I, para 7.1.4	Type of service with code 22027000 has been specified in connection with coming into force of IACS UR Z17 (Rev.16 Aug 2021)	340-04-1650c of 25.10.2021	01.01.2022
Part II, para 2.2.7.8	Requirements have been specified in connection with coming into force of IACS UR Z17 (Rev.16 Aug 2021)	340-04-1650c of 25.10.2021	01.01.2022
Part II, Table 3.2.1	Requirements have been specified with regard to deletion of term "outfitting"	340-04-1676c of 02.12.2021	01.01.2022
Part II, para 3.2.3	Requirements have been specified with regard to deletion of term "outfitting"	340-04-1676c of 02.12.2021	01.01.2022
Part II, paras 4.8.4.1.3 and 4.8.4.1.4	Conditions for keeping out of ship of the fleet monitoring system have been specified	340-04-1676c of 02.12.2021	01.01.2022

[1] Amendments and additions introduced at re-publication or by new versions based on circular letters or editorial amendments.

Amended paras/chapters/sections	Information on amendments	Number and date of the Circular Letter	Entry-into-force date
Part III, para 18.1.2	Requirements for determination of terms of light-weight check for fishing vessels over 30 m length have been specified	340-04-1676c of 02.12.2021	01.01.2022
Part IV, para 4.8.3	Reference to the applicable requirements has been specified	340-04-1676c of 02.12.2021	01.01.2022

PART I. GENERAL PROVISIONS

1 APPLICATION

1.1 The Rules for the Classification Surveys of Ships in Service[1] set forth types, scopes and schedule of surveys of items of technical supervision for various purpose ships to verify that ships and ship refrigerating plants comply with the rules of Russian Maritime Register of Shipping[2] and the normative technical documents regarding the possibility to assign, retain and confirm the Register class according to their purpose, safety of human life at sea, safe carriage of passengers and cargoes, as well as for other functions of technical supervision assigned to the Register.

1.2 The present Rules are applied by the Register during technical supervision of ships and ship refrigerating plants in service with the purpose of their classification and verification of class conditions. Classification surveys carried out in due dates and scope are mandatory for a ship and ship refrigerating plant classification by the Register.

More detailed instructions and recommendations to the surveyors and shipowners on the organization and methods of technical supervision are given in the Guidelines on Technical Supervision of Ships in Service[3].

1.3 The present Rules are mandatory for all shipowners, organizations, firms and individuals involved in operation of ships. The above-mentioned organizations, firms and individuals ensure the fulfillment of the Rules' requirements, performance of the Register technical supervision, submission of the necessary documentation to the RS surveyors and the fulfillment of the conditions of class imposed by the RS surveyors upon the survey results.

1.4 The possibility of deviation from certain requirements of the Rules is determined by the Register Head Office (RHO), provided the shipowner submits the technical background and the conclusion of the RS Branch Offices for in-service supervision.

1.5 The Register classification activities do not preclude the set activities of other state supervision bodies, shipowners, flag state maritime administrations and port administrations.

The requirements for suppliers of services, which results are used during Register surveys of ships, are set forth in Section 7.

The requirements for checking of instrumentation are set forth in Section 5, Part I "General Provisions" of the Guidelines.

1.6 The fees for the supervision carried out are charged by the Register according to the pricing system established by the Register. In case of non-fulfillment or improper fulfillment of the obligations to the Register, including the payment for its services, the Register has a right not to assign the class or, when the class has been already assigned, to suspend or withdraw the class of the ship, on which the obligation to the Register, including the payment for its services, has not been fulfilled or has been improperly fulfilled, and to cancel the documents issued by the Register (refer to 2.1). Payment of invoices submitted by the Register for the survey is made per existing scale of fees or on the basis of an agreement between a shipowner/yard and the Register Representation. Survey carried out by the Register Representation initiative is not invoiced, however, the surveys aimed to eliminate the comments made in the course of the initiative survey are paid for on common terms.

---

[1] Hereinafter referred to as "the Rules".
[2] Hereinafter referred to as "the Register, RS".
[3] Hereinafter referred to as "the Guidelines".

2 DEFINITIONS AND EXPLANATIONS

2.1 DEFINITIONS APPLIED TO ALL SHIPS

Definitions and explanations relating to general terminology used in the RS normative documents are given in Part I "General Regulations for Technical Supervision" of the Rules for Technical Supervision during Construction of Ships and Manufacture of Materials and Products for Ships, Section 1 "General" of the General Regulations for the Classification and Other Activity. Specific terminology is also given in the Rules for the Classification and Construction of Sea-Going Ships and other RS normative documents, as applicable. For the purpose of these Rules, the following definitions and explanations have been adopted (unless expressly provided otherwise in particular parts of the Rules).

Automated technical diagnostics (technical condition monitoring) system is a diagnostics (monitoring) system providing diagnostics (monitoring) with automation and human involvement.

Automatic technical diagnostics (technical condition monitoring) system is a diagnostics (monitoring) system providing diagnostics (monitoring) without human involvement.

Cancellation of documents is a procedure of termination of the ship's documents consisting in an entry to be made by the RS surveyor in the Survey Report and, whenever practicable, in the Classification Certificate itself to the effect that the Certificate ceases to be valid (loses its validity) due to the reasons of cancellation, as well as in case of non-fulfillment or improper fulfillment of the shipowner/ proprietor commitments to the Register including commitments on payment for its services or payment of a penalty. Procedure for cancellation of documents may cover documents issued on behalf of the Flag State Maritime Administration (MA) provided the appropriate MA directions are available.

Ballast tank is a tank that is being used primarily for salt water ballast. A double side tank of a double skin ship is considered as a separate tank even if it is connected with double bottom or other tanks.

Shafting is a structural system connecting kinematically the main engine or main gear, if any, with the propeller. Shafting includes propeller, intermediate and other shafts with their connections and bearings as well as sterntube with bearings, seals, lubrication and cooling systems and other arrangements (for example, propeller shaft sagging meter, protective casings, stopper, etc.).

Outer road is a water area specially designated at the approaches to the seaport and intended for ships' lying and support services.

Inner road is a water area specially designated within the seaport boundaries stipulated by the state legislation where the port belongs and intended for ships' support services and performing cargo operations.

Temporary repair is repair providing retainment of the ship's class, and, where applicable, of statutory certificates of the ship or floating facility for time period, assigned by the Register in each particular case considering essential ship's structures, mechanisms, systems, equipment, arrangements to be repaired and depending on dimensions/particulars of the damages/failures.

Renewal of class is a confirmation of the ship class validity for a new, as a rule, 5-year classification period and issue of the Classification Certificate, instead of the Certificate, which validity expired, in case of the satisfactory results of the special survey of the ship in the Register class.

Age of ship is a period of time (a number of full years) between the date of the ship construction and the current date. The age of a ship (or the date of construction) cannot be changed as the result of major conversion, modernization or renovation of the ship hull.

Reinstatement of class is a confirmation of class validity with the satisfactory results of the occasional survey of the ship with the class suspended on the elimination of the reason that caused the class suspension.

Air pipe heads fitted on the exposed deck are those extending above the freeboard deck or superstructure decks.

Prototype ship is a single-built ship or the first ship of a series. Where series ships are built at different firms, the first ship of a series built at each firm is considered to be the prototype ship. The ship, which has undergone major conversion, shall be qualified as a prototype ship.

INF cargo is packaged irradiated nuclear fuel, plutonium and high-level radioactive wastes carried as cargo in accordance with Class 7 of the International Maritime Dangerous Goods Code (IMDG Code) (schedules 10, 11, 12, 13 or 14).

Cargo area (cargo length area):

for tankers (including oil tankers and chemical tankers): is that part of the ship, which includes cargo tanks, slop tanks and cargo/ballast pump-rooms, cofferdams, ballast tanks and void spaces adjacent to cargo tanks, and also deck areas throughout the entire length and breadth of the part of the ship over the above mentioned spaces;

for dry cargo ships (including bulk carriers and general dry cargo ships): is that part of the ship, which includes all cargo holds and adjacent areas including fuel tanks, cofferdams, ballast tanks and void spaces.

Date of issue is the date of completion of the ship survey resulting in issue of an appropriate certificate.

Date of survey is the date stated in documents confirming the survey performance, in the report (if several reports are available, the date of the latest one), certificate.

Date of build of the ship is the date (day, month and year) when the new construction survey process of the Register is actually completed and the Classification Certificate is issued to the ship.

After conversion/modernization is completed, the date of build shall remain assigned to the ship.

Where a complete replacement or addition of a major portion of the ship (e.g., complete forward or after section, a complete main cargo section (which may include a complete cargo hold/tank), a complete deck section of a passenger ship or a hull structure obtained after conversion of a single hull to a double hull ship) is involved as a result of conversion/modernization, the following shall apply:

the date of build (date, month and year) associated with each major portion of the ship shall be indicated where it has been agreed that the newer structure shall be on a different survey cycle;

survey requirements shall be based on the date of build associated with each major portion of the ship;

anniversary dates of the subsequent surveys of the replaced or built-in hull major parts/portions shall be assigned the same as for the whole ship, i.e. one anniversary date for the ship as a whole.

Double class is a class of a ship classed by two societies not entered into an agreement on dual class. In this case, one classification society when performing classification survey of the ship for confirmation/renewal of its class, acts independently of the other society and in conformity with the requirements of its rules as it would act in the case of the ship being classed with the society alone.

Close-up survey is a survey where the details of structural components are within the close visual inspection range of the surveyor, i.e. normally within reach of hand.

Approved materials, products and production processes are materials, products and production processes holding Type Approval Certificate or agreed upon by the Register for direct use without the drawing-up of this Certificate.

Anniversary date is the date and month of each year corresponding to the expiry date of validity of the Classification Certificate issued in accordance with 2.4.1.4.5 — 2.4.1.4.9 of Part II "Survey Schedule and Scope".

Substantial corrosion is an extent of corrosion such that assessment of corrosion pattern indicates a wastage in excess of 75 % of allowable margins, but within acceptable limits.

For ships constructed in compliance with the IACS Common Structural Rules (**CSR** ships), substantial corrosion is such degree of corrosion when measured value lies in the range t_{ren} + 0,5 mm and t_{ren}. Where t_{ren} is the allowable thickness, in mm, below which renewal of structural members shall be carried out.

Detainable deficiencies/defects are those deficiencies/defects involving the ship condition or its equipment and outfit which do not comply with the requirements of the RS rules, or if the ship is not fit for proceeding to sea without posing a danger to itself, people or the cargo onboard, or without presenting unreasonable threat of harm to the marine environment, that require immediate rectification actions for possible retainment of the ship's class.

Changing of class notation is a process of changing the character of classification, distinguishing marks, as well as descriptive notation in the class notation of RS-classed ship.

Surveyor's inspection is checking of the ship received to or accepted from the time-charter according to the charterer's request.

Competent organization is an organization recognized as having adequate knowledge and experience in the particular area, in accordance with 1.1 of Part I "General Regulations for Technical Supervision" of the Rules for Technical Supervision during Construction of Ships and Manufacture of Materials and Products for Ships.

Conservation of a ship is a system of measures taken by the shipowner in case of withdrawal of a ship from operation to provide preservation of the ship technical equipment and the ship as a whole.

(Technical) condition monitoring (CM) is acquisition and processing of information and data that indicate the state of machinery over time (Note. The machinery state deteriorates if faults or failures occur). It is also a process that makes it possible to determine the current operational availability of machinery and units without dismantling or examination thereof.

Critical structural areas:

locations, which have been identified from calculations to require monitoring; or

locations, which have been identified from the service history of the subject ship, similar ships or ships of the series to be sensitive to cracking, buckling or corrosion, which would impair the structural integrity of the ship.

Minor deficiencies/defects are those deficiencies/defects which do not prevent the ship from proceeding to sea as they are not considered to pose a danger to the persons on board, the cargo and the environment within the timeframe given for their rectification.

Non-destructive testing (NDT) is a method of assessing condition of an item without causing failure of integrity of the structure and its material.

Normative-technical documents are standards, guiding technical documents, technical requirements, norms, calculation methods, instructions, guidelines and other documents approved by the Register, which determine structural and production standards during construction (manufacture), repairs, assembly, tests and operation of ships, ship's systems, arrangements and equipment, materials and products.

Overall survey is a survey intended to report on the overall condition of the hull structure and determine the extent of additional close-up surveys.

IACS Common Structural Rules (CSR) — Common Structural Rules for Bulk Carriers and Oil Tankers.

Operator is an individual or legal entity, which operates the ship on the basis of agreement with a owner or shipowner.

Survey is an integral part of technical supervision comprising:

verification of the ship's documents, approved technical documentation, certificates of conformity for materials and components;

verification of documents on scheduled inspection carried out by competent persons or organisations;

examination, including, if necessary, opening-up and dismantling;

check of measurements, participation in tests, operational testing;

monitoring of production processes;

issue of the required Register documents or their endorsement;

branding and sealing of items of technical supervision, if necessary.

Survey at sea is a survey performed by the Register when the ship or offshore installation is beyond the seaport boundaries stipulated by the state legislation to which the port relates, and of outer road (for example, in the voyage, within the territorial sea and continental shelf limits, etc., defined in compliance with the UN Convention on the Law of the Sea (UNCLOS), whichever is applicable).

Survey at anchorage is a survey performed by the Register when the ship or offshore installation is on inner or outer roads.

Special/exceptional circumstances is a term applied:

when the due date for submission of a ship for special survey is assigned according to 2.4.1.4.8 of Part II "Survey Schedule and Scope" and a term which means that the ship is laid up, in conservation or withdrawn from operation for a long period due to major (long-term) repair or conversion/modernization;

in the case of extension of special survey according to 2.4.1.4.10 of Part II "Survey Schedule and Scope" as well as extension of survey of the outside of the ship's bottom in dry dock according to 2.5.3.5 of Part II "Survey Schedule and Scope" and a term which means delays incurred by actions taken to avoid severe weather conditions, or that at the place of the ship survey the following has been found to occur: unavailability of dry-docking facilities, or unavailability of repair facilities, or unavailability of essential materials, equipment or spare parts.

Reassignment of RS class is a process of classification of a ship with withdrawn RS class and having no class of another classification society (ACS) — IACS member over 6 months from receipt of written request for retrieval to RS class.

Confirmation of class is a confirmation of class validity in the Classification Certificate in case of the satisfactory results of the annual (intermediate) survey.

Thorough repair is a repair made for renovation of the damaged structure in accordance with the requirements of the Rules for Construction up to the level when there is no necessity to set any requirements or conditions regarding the object repaired and to perform technical supervision of the latter until the next periodical survey, i.e. the repair was made to the surveyor satisfaction and no additional repair is required.

Semihard coating is the coating, which solidifies or changes so that it retains flexibility and an ability to prevent corrosion within, at least, three years. It shall be hard enough to be touched and for walking without essential deterioration of its protective properties.

Spaces are separate compartments including holds, tanks, cofferdams and void spaces bounding cargo holds, decks and the outer hull.

Transverse section includes all longitudinal members such as plating, longitudinals and girders at the deck, sides, bottom, inner bottom, and longitudinal bulkhead (including plating and longitudinals of sloping and horizontal plates of topside, hopper and wing tanks) within the length of one plate along the ship. For transversely framed vessels, a transverse section includes adjacent frames and their end connections in way of transverse sections.

Rules for Construction are the Rules for the Classification and Construction of Sea-Going Ships and also the Rules for Construction of other types of ships like mobile offshore drilling units, nuclear vessels, gas carriers, etc.

Recognition of service supplier is a procedure for obtaining by the service supplier of recognition (approval) by the Register to perform the works, which results are used by the Register during survey of ships.

Suspension of class is a notification of the shipowner that the validity of the ship class is suspended from the date and due to the reason stated in the notification, until the moment of elimination of the reason that caused the class suspension, but not more than for 6 months after the date of class suspension.

Assignment of RS class to a ship in service is a process of classification of the ship constructed without RS technical supervision and having no class of ACS — IACS member over 6 months from receipt of written request for classification.

Cranking of machinery is periodical propulsion of driving mechanisms and equipment by means of driving gears or manually by rotating not less than one revolution/cycle and installation of these elements in new position.

Self-propelled ship is a ship with mechanical means of propulsion not requiring assistance from another ships during normal operation.

Corrosion prevention system is normally considered a full hard protective coating. Hard protective coating is usually to be epoxy or equivalent. Other coating systems, which are neither soft nor semihard coatings, may be considered acceptable as alternatives, provided that they are applied and maintained in compliance with the manufacturer's specification (as regards the application of semihard coatings refer to 1.3.2.5 of Part III "Additional Surveys of Ships Depending on their Purpose and Hull Material"). As for the requirements regarding semihard coatings, these coatings, if already applied, will not be accepted from the next special or intermediate survey commenced on or after 1 July 2010, whichever comes first, with respect to waiving the annual internal examination of the ballast tanks.

Technical diagnostics (technical condition monitoring) system is a complex of means, items of technical supervision and responsible persons, required for diagnostics (monitoring) in accordance with the requirements specified in the technical documentation.

Transfer of class is:

transfer of class of the ship holding valid or suspended class of ACS — IACS member to RS class;

transfer to RS class of the ship which lost ACS (IACS member) class less than 6 months prior to written request for classification;

transfer of the ship from RS class to ACS (IACS member) class.

Withdrawal of class is a termination of technical supervision by the Register and invalidation of the Classification Certificate with notification to the shipowner and Flag State Administration that the ship's class is withdrawn from the date and due to the reason stated in the notification. Conditions of class withdrawal are specified in 2.1.9 and 2.1.10 of Part I "Classification" of the Rules for the Classification and Construction of Sea-Going Ships.

Owner is an individual or legal entity, which owns the ship on the basis of proprietor's rights with no regard whether he operates the ship himself or places under the trust management or the other type of management to other party on the legal grounds.

Dual class is a class of a ship classed by two societies entered into an agreement on a dual class. In this case, one such classification society when performing classification survey for confirmation/renewal of its class, acts independently of the other society and in conformity with the requirements of its rules as it would act in the case of the ship being classed with this society alone.

Suspect areas are locations showing substantial corrosion and/or are considered by the surveyor to be prone to rapid wastage.

Coating condition is defined as follows:

GOOD condition with only minor spot rusting;

FAIR condition with local breakdown at edges of stiffeners and weld connections and/or light rusting over 20 % or more of areas under consideration, but less than as defined for POOR condition;

POOR condition with general breakdown of coating over 20 % or more of areas or hard scale at 10 % or more of areas under consideration.

Retainment of class is a confirmation of class validity in the Survey Report in case of the satisfactory results of the occasional survey including the survey carried out in connection with an accident or with replacement of the Register documents due to the change of flag, shipowner, port of registry, name of the ship or signal letters.

Special consideration (in connection with close-up surveys and thickness measurements) means sufficient close-up inspection and thickness measurements to be taken to confirm the actual average condition of the structures under the coating.

Active means of the ship's steering (AMSS) — definition is given in 1.2.8 Part III "Equipment, Arrangements and Outfit" of the Rules for the Classification and Construction of Sea-Going Ships.

Prompt repair is the repair made without delay during the survey.

Prompt and thorough repair is a permanent repair performed and completed at the time of survey to the satisfaction of the surveyor, therein removing the need for the imposition of any associated condition of classification.

Ship is, for the purpose of these Rules, any ship (including a floating dock, a mobile offshore drilling unit (MODU), a floating offshore oil-and-gas production unit (FPU)), as well as fixed offshore platform (FOP).

Ship in conservation is a ship with all items of the RS technical supervision temporary withdrawn by the shipowner from operation but carefully preserved, the ship's class is suspended.

Laid-up ship is a ship withdrawn by the shipowner from operation for any reasons not connected with its repair, modernization or maintenance, the ship's class is retained.

Ship's technical documentation is design and technical documentation for ship's items of technical supervision, which contains the data necessary for checking the implementation of the Register relevant requirements.

Shipowner is an individual or legal entity, which operates the ship on its own behalf with no regard whether he is the owner of the ship or he uses it on other legal grounds.

Technical diagnostics is a process of determination of technical condition of an item of technical supervision. Analysis of diagnostic indicators or sets of diagnostic indicators to determine the nature of fault or failure (type, location, degree of development).

Maintenance is a complex of technological operations performed and a system of measures taken on a regular or irregular basis for maintaining the operability of items of technical supervision listed in the RS Nomenclature, in accordance with their purpose and performance characteristics. Maintenance of an item may include the item technical diagnostics, adjustment, control of functioning, replacement of service and lubricating fluids, replacement of removable seals, cleaning and flushing, both with complete or partial item disassembly, with or without such, as well as similar operations. For the purpose of these Rules, repair of an item or its components (including replacement), the requirements for which are regulated by the RS rules, shall not be regarded as maintenance.

Technical condition-based maintenance (CBM) is a maintenance performed as governed by the data on the equipment technical condition and in compliance with condition monitoring and maintenance schemes.

Hull technical condition is a complex of parameters, on which the strength, rigidity and integrity of the hull depend and which vary because of defects originating and developing during ships service.

Remote inspection technique(s) (RIT) is a means of survey that enables examination of any part of the structure without the need for direct physical access of the surveyor (refer to Annex 39 to the Guidelines and Section 4 of Part I "General Provisions" of the Rules).

Representative tanks, spaces are those which are expected to reflect the conditions of other tanks and spaces of similar type and service and with similar corrosion prevention systems. When selecting representative tanks and spaces, account shall be taken of the service and repair history on board and identifiable critical structural areas and/or suspect areas.

Exclusive surveyor is an individual who has concluded the contract of employment exclusively in the RS Branch Office and has adequate qualification and background and is authorized to perform duties and activities entrusted with by the employer within his terms of reference.

2.2 DEFINITIONS OF TYPES OF SHIPS SUBJECT TO ENHANCED SURVEY PROGRAMME (ESP)

2.2.1 Enhanced Survey Programme (ESP) prescribed in Sections 2 — 6 of Part III "Additional Surveys of Ships Depending on their Purpose and Hull Material" apply to such types of ships as oil tankers, chemical tankers and bulk carriers, which definitions are given in the mentioned sections.

Surveys prescribed by Sections 5 and 6 of Part III "Additional Surveys of Ships Depending on their Purpose and Hull Material" apply also to self-unloading bulk carriers, depending on their structural configuration.

2.2.2 For proper and unified interpretation by shipowners and surveyors the definitions of ships subject to ESP are given below.

2.2.3 Requirements for enhanced survey of ships are set forth in Sections 2 — 6 of Part III "Additional Surveys of Ships Depending on their Purpose and Hull Material".

2.2.4 Oil tanker.

The descriptive notation "**Oil tanker**" and the distinguishing mark (**ESP**) shall be assigned to sea-going self-propelled ships, which are constructed generally with integral tanks and intended primarily to carry oil in bulk. This descriptive notation shall be assigned to tankers of both single and double skin construction, as well as tankers with alternative structural arrangements, e.g. mid-deck designs. Typical midship sections are given in Fig. 2.2.4.

Note. Oil tankers that do not comply with MARPOL I/19 may be subject to international and/or national regulations requiring phase out under MARPOL I/20 and/or MARPOL I/21.

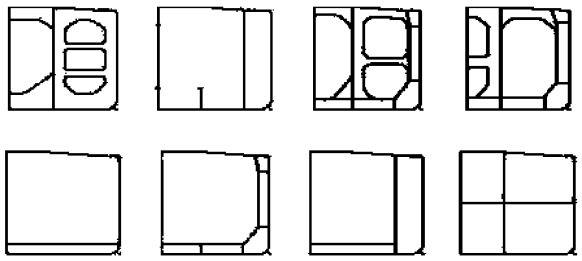

Fig. 2.2.4
Typical midship sections of an oil tanker

2.2.5 Bulk carrier.

The descriptive notation "Bulk carrier" and the distinguishing mark (ESP) shall be assigned to seagoing self-propelled ships, which are constructed generally with single deck, double bottom, hopper side tanks and topside tanks and with single or double side skin construction in cargo length area and intended primarily to carry dry cargoes in bulk. Typical midship sections are given in Fig. 2.2.5.

For bulk carriers with hybrid cargo hold arrangements, i.e. with some cargo holds of single side skin and others of double side skin, the requirements of Section 6 of Part III "Additional Surveys of Ships Depending on Their Purpose and Hull Material" shall apply to cargo holds of single side skin and the requirements of Section 5 of Part III "Additional Surveys of Ships Depending on their Purpose and Hull Material" shall apply to cargo holds of double side skin.

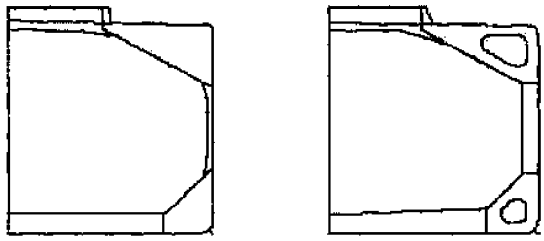

Fig. 2.2.5
Typical midship sections of a bulk carrier

2.2.6 Ore carrier.

The descriptive notation "**Ore carrier**" and the distinguishing mark (**ESP**) shall be assigned to seagoing self-propelled ships, which are constructed generally with single deck, two longitudinal bulkheads and a double bottom throughout the cargo length area and intended primarily to carry ore cargoes in the centre holds only. Typical midship sections are given in Fig. 2.2.6.

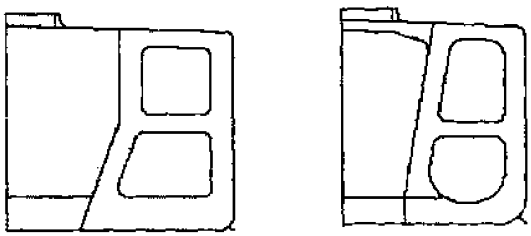

Fig. 2.2.6
Typical midship sections of an ore carrier

2.2.7 Combination carrier.

2.2.7.1 Combination carrier is a general term applied to ships intended for the carriage of both oil and dry cargoes in bulk. These cargoes are not carried simultaneously, with the exception of oily mixtures retained in slop tanks. The ship types defined in 2.2.7.2 and 2.2.7.3 shall be considered to be combination carriers.

2.2.7.2 The descriptive notation "**Ore/oil carrier**" and the distinguishing mark (**ESP**) shall be assigned to sea-going self-propelled ships, which are constructed generally with single deck, two longitudinal bulkheads and a double bottom throughout the cargo length area and intended primarily to carry ore cargoes in the centre holds or of oil cargoes in centre holds and wing tanks. Typical midship sections are given in Fig. 2.2.7.2.

Note. Ore/oil carriers that do not comply with MARPOL I/19 may be subject to international and/or national regulations requiring phase out under MARPOL I/20 and/or MARPOL I/21.

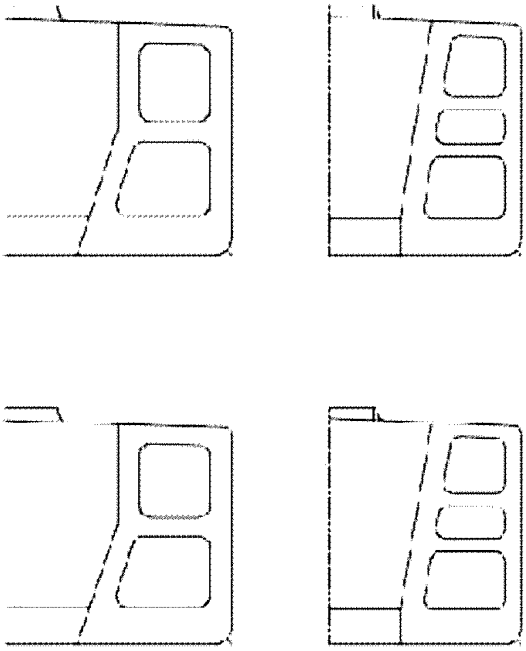

Fig. 2.2.7.2
Typical midship sections of an ore/oil carrier

2.2.7.3 The descriptive notation "**Oil/bulk/ore (OBO) carrier**" and the distinguishing mark (**ESP**) shall be assigned to sea-going self-propelled ships, which are constructed generally with single deck, double bottom, hopper side tanks and topside tanks, and with single or double side skin construction in the cargo length area, and intended primarily to carry oil or dry cargoes, including ore, in bulk. Typical midship sections are given in Fig. 2.2.7.3.

N o t e . Oil/bulk/ore carriers that do not comply with MARPOL I/19 may be subject to international and/or national regulations requiring phase out under MARPOL I/20 and/or MARPOL I/21.

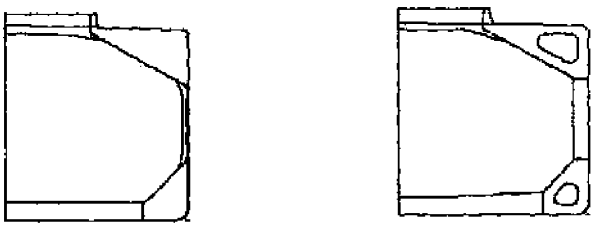

Fig. 2.2.7.3
Typical midship sections of an oil/bulk/ore carrier

2.2.8 Chemical tanker.

The descriptive notation "**Chemical tanker**" and the distinguishing mark (**ESP**) shall be assigned to sea-going self-propelled ships, which are constructed generally with integral tanks and intended primarily to carry chemicals in bulk. This type notation shall be assigned to tankers of both single and double skin construction, as well as tankers with alternative structural arrangements. Typical midship sections are given in Fig. 2.2.8.

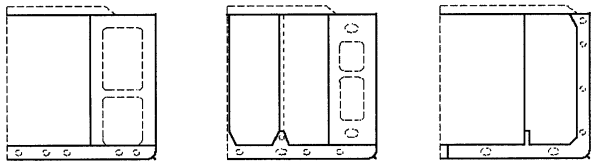

Fig. 2.2.8
Typical midship sections of a chemical tanker

2.2.9 Self-unloading bulk carriers.

The ship type descriptive notation "**Self-unloading bulk carriers**" and the distinguishing mark (**ESP**) shall be assigned to sea-going self-propelled ships, which are constructed generally with single deck, double bottom, hopper side tanks and topside tanks and with single or double side skin construction in cargo length area and intended to carry and self-unload dry cargoes in bulk.

Typical midship sections are given in Fig. 2.2.9.

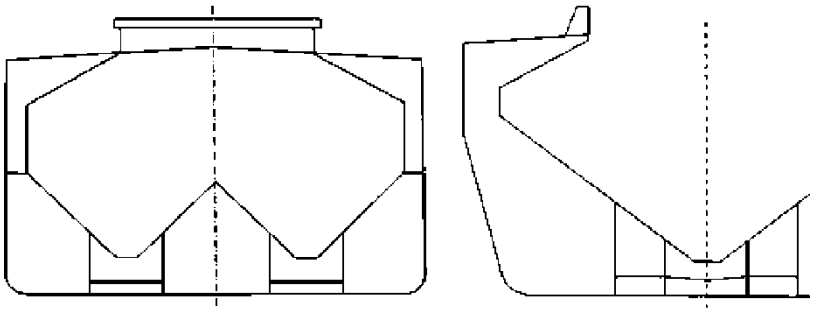

Fig. 2.2.9
Typical midship sections of a self-unloading bulk carrier

2.3 ABBREVIATIONS

GMDSS — Global Maritime Distress and Safety System.

RHO — Register Head Office.

TM — thickness measurement(s).

ACS — another classification society.

ISO — International Organization for Standardization.

MA — Maritime Administration.

MARPOL 73/78 — International Convention for Prevention of Pollution from Ships, 1973, as modified by the Protocol of 1978 relating thereto.

ISM Code — International Management Code for the Safe Operation of Ships and for Pollution Prevention.

IEC — International Electrotechnical Commission.

RS Nomenclature — Nomenclature of Items of the Register Technical Supervision.

TM Report — Thickness Measurements Report in the form of schemes, tables and descriptions.

INF — irradiated nuclear fuel is a material containing uranium, thorium and/or plutonium isotopes, which have been used to maintain nuclear chain reaction.

MODU/FOP Rules — Rules for the Classification, Construction and Equipment of Mobile Offshore Drilling Units (MODU) and Fixed Offshore Platforms of (FOP).

Recognized laboratories — laboratories recognized by the Register or ACS — IACS member or accredited according to national standards (refer to Section 7 of this Part).

RTSCS — Rules for Technical Supervision during Construction of Ships and Manufacture of Materials and Products for Ships.

CSS — Continuous Survey System.

SOLAS 74/78 — International Convention for the Safety of Life at Sea, 1974, as modified by the Protocol of 1978 relating thereto.

PMS — Planned Maintenance Scheme.

IACS PR — IACS Procedural Requirement.

IACS UR — IACS Unified Requirement.

IACS UI — IACS Unified Interpretation.

ESP — Enhanced Survey Programme.

NAABSA — Not always afloat but safely aground (refer to Section 15 of Part XVII "Distinguishing Marks and Descriptive Notations in the Class Notations Specifying Structural and Operational Particulars of Ships" of the Rules for the Classification and Construction of Sea-Going Ships.

3 TYPES OF CLASSIFICATION SURVEYS

3.1 The following types of classification surveys are applied during technical supervision of ships and refrigerating plants in service:

.1 initial surveys in service associated with:

.1.1 transfer of class;

.1.2 assignment of class;

.1.3 reassignment of class;

.1.4 assignment of RS class to a double-class ship or a dual-class ship;

.1.5 reactivation after lay-up/conservation;

.2 periodical surveys:

.2.1 annual survey;

.2.2 intermediate survey;

.2.3 special survey;

.2.4 survey of the outside of the ship's bottom;

.2.5 survey of refrigerating plants;

.2.6 surveys within the CSS scope;

.2.7 surveys within the PMS scope;

.2.8 survey on a CM/CBM basis;

.3 occasional surveys:

.3.1 associated with suspension, reinstatement or withdrawal of class (refer also to 4.7.6, Part II "Carrying Out Classification Surveys of Ships" of the Guidelines);

.3.2 associated with changing of class notation, type/subtype, etc. (refer to 3.2, Part II "Survey Schedule and Scope" of these Rules);

.3.3 associated with reinstatement/retainment of class;

.3.4 associated with ship passage;

.3.5 associated with emergency occurrences;

.3.6 associated with verification of the implementation of set (imposed) before conditions (requirements): conditions of class and/or statutory conditions;

.3.7 on the initiative of the Register;

.3.8 in other justified cases;

.4 other surveys carried out:

.4.1 on behalf of state bodies (Maritime Administration of a Flag State, the Flag State embassy, standardization bodies, technical supervisory bodies for pressure vessels, etc.);

.4.2 at the request of companies (insurance, shipping, industrial, etc.);

.4.3 associated with ship conversion/repair/modernization as well as modifications in the ship structure and alterations in the list of items of technical supervision, including installation on board of new machinery, arrangements and equipment covered by the RS Nomenclature;

.4.4 associated with change of shipowner, port of registry and ship's name;

.4.5 associated with fleet monitoring system, special surveillance regime;

.4.6 associated with ship lay-up/conservation.

3.2 Schedule and scope of the above surveys are given in Part II "Survey Schedule and Scope", Part III "Additional Surveys of Ships Depending on their Purpose and Hull Material" and Part IV "Surveys of Refrigerating Plants".

3.3 Instructions and recommendations on examinations, inspections, measurements and testing of items of technical supervision to be performed during the above mentioned surveys (including recommendations on identification of potential areas of intensive wear and/or defects), refer to the Guidelines and Annexes thereto.

4 PREPARATION FOR SURVEYS

4.1 Surveys are carried out by qualified surveyors sufficiently competent to perform the required survey. Periodical surveys are generally carried out by the experts on the hull, mechanical, electromechanical and radio specialities. In certain cases, a combination of specialities is allowed for the surveyor considering his qualification, experience, background in minor specialities and complexity level of the ship submitted for the survey.

The Register shall ensure in its contracts with shipowners or operators for the issue of statutory or class certificates to a ship that such issue shall be made conditional on the parties not opposing the access of the Commission inspectors on board that ship for the purposes of Regulation (EC) No 391/2009.

4.2 In order to assist surveyors during the ship survey, the master and/or chief engineer in charge of the ship submission shall assign their mates responsible for operation and maintenance of the ship part to be submitted, which are familiar with all the faults, defects and damages within the time period after the previous survey and with their elimination.

4.3 For matters relating to classification and application of the rules, the RS Branch Offices use both current and previous editions of the rules and other Register normative documents, standards, navigation and ship repair normative-technical documentation.

Ships in service are covered by the requirements of that edition of the rules they were constructed in compliance with, unless otherwise is specified in the follow-up editions of the rules and notices of amendments thereto issued after publication of the rules.

Ships in service being classed by the Register for the first time are covered by the requirements of the rules in force during the construction of the ship in question considering the requirements of the follow-up editions of the rules applicable to the ships in service.

The extent of newly-issued rules' application to the ships in service at their reconstruction after accidents or in other similar cases, or at their conversion, is determined by the Register with due regard to expediency and technical substantiation in each case.

4.4 To reduce the survey duration and ensure full-range survey, the shipowner shall prepare the ship in an appropriate way:

all the ship's spaces shall be made accessible for the survey;

all items shall be in good working order except for cases of repairs and accidents;

in necessary cases access, opening-up and/or dismantling shall be provided.

Organizations and individuals involved in operation, repairs or conversion of ships subject to the Register technical supervision shall provide support for the surveyor in his technical supervision of repair works, manufacture and testing of materials and products for ships.

Responsibility for timely submission of ships and ship's items of technical supervision for surveys and timely implementation of the surveyor's requirements and comments set out in the Register documents (reports, certificates, etc.) stays with the shipowner and the ship administration. Performance of testing, measurements and testing for defects is the responsibility of the shipowner or the works repairing the ship.

If the shipowner is unable to simultaneously submit to the Register all the ballast tanks subject to annual or intermediate surveys, the shipowner shall develop and agree with the Register the schedule for submission of all ballast tanks during established surveys (+ 3 months from the appointed date of annual survey).

Classification Certificate may be confirmed only after surveying all ballast tanks.

4.5 During the survey the shipowner shall submit the following documents upon the Register request:

.1 documents issued and/or approved by the Register, including all the latest reports of the ship survey performed by the Register or ACS, all informations for the master and instructions regarding matters regulated by the Register rules (strength, ballasting, shipment of special cargoes, etc.);

.2 ship's technical documentation, i.e. drawings, diagrams, descriptions, service instructions, files or passports, normative and operational documentation on ship, machinery and arrangements;

.3 certificates for items of the RS technical supervision covered by the RS Nomenclature (considering provisions of 1.7, Part II "Carrying Out Classification Surveys of Ships" of the Guidelines);

.4 log books and other documents reflecting operation of ship and machinery, arrangements, equipment subject to the Register supervision, malfunctions occurred to them and their elimination. In case the shipowner is unable to provide the technical documentation in full, measures shall be taken to provide the required information with calculations, test results and drawings made, if necessary.

4.6 The Register may invite experts in shipbuilding and mechanical engineering to resolve issues regarding new types of ships, machinery and arrangements, as well as for resolution of extraordinary important problems, which occur during repairs, accident investigations and in other cases.

4.7 During surveys, repairs, modernization, conversion and operation of ships, the shipowners or authorized shipowners' representatives as well as firms involved in the process (e.g. designers, shipyards and ship repair yards, service suppliers, etc., whichever is applicable) shall follow the requirements of the RS rules.

4.8 For surveys consuming considerable time, including review of the technical documentation and testing of machinery, arrangements and ship as a whole, the shipowner shall submit for the Register approval a plan of submission of documents, parts of the ship and schedule of testings.

4.9 Shipowners, organizations and firms shall ensure all the necessary conditions for quality and safe survey or testing of items. All the ship machinery, equipment and instruments shall be in working order (except cases of repairs and accidents); ladders, scaffoldings and other arrangements for surveys of ships shall be in a safe operating condition, and also all the safety precautions for the survey performed shall be made, in particular, regarding internal surveys of tanks, boilers and pressure vessels, as well as examination of structures at height, crankcases, etc.

4.10 Survey of ships and offshore installations at sea or at anchorage.

Survey of ships and offshore installations at sea or at anchorage may be accepted provided the appropriate preparation has been made and appropriate measures have been taken by the shipowner and the personnel onboard to ensure safe execution of the survey by the RS surveyor(s). Precautions and procedures for carrying out surveys shall be in accordance with 4.11.7 of Part I "General Provisions" and, additionally, for ESP ships[1] — in accordance with 1.3.6 of Part III "Additional Surveys of Ships Depending on their Purpose and Hull Material".

4.11 Preparation and safe execution of the ship hull survey.

4.11.1 Taking into consideration that the process of a hull survey in the scope of special survey is the most time-taking, the requirements for preparations for execution of such survey are given below.

During preparation for execution of annual or intermediate hull survey, one shall use the requirements applicable to preparation for hull survey execution given below.

4.11.2 Prior to the commencement of special survey, the shipowner shall provide information on all the defects, wears and damages during the previous 5-year period, with the maintenance records, ship technical files, ship protocols, ship logs, etc.

---

[1] Refer to the definition "ESP ships" in 1.1.1 of Part III "Additional Surveys of Ships Depending on their Purpose and Hull Material".

4.11.3 Conditions for survey of hull structures.

The ship hull shall be prepared for execution of the survey and, simultaneously, the following conditions shall be provided for a safe execution of the survey:

.1 the shipowner shall provide necessary facilities for a safe execution of the survey;

.2 tanks, holds and other spaces shall be safe for access, i.e. gas-freed, ventilated and illuminated;

.3 for survey and thickness measurements and to allow for a thorough examination, all spaces as well as structures subject to close-up survey and thickness measurements, shall be cleaned including removal from surfaces of all loose accumulated corrosion scale. Spaces and the above structures shall be sufficiently clean and dry and their surfaces shall be free from water, scale, dirt, oil residues, etc. to the extent to reveal corrosion defects, deformation, fractures, damages or other structural deterioration as well as the condition of the spaces coating, and to carry out examination thereof and take measurements. However, those areas of structure whose renewal has already been decided by the shipowner need only be cleaned and descaled to the extent necessary to determine the limits of the areas to be renewed;

.4 sufficient illumination shall be provided to reveal substantial corrosion, deformation, fractures, damages or other structural deterioration;

.5 where soft or semihard coatings have been applied, safe access shall be provided for the surveyor to verify the effectiveness of the coating and to carry out an assessment of the conditions of internal structures, which may include spot removal of the coating. When safe access cannot be provided, the soft or semihard coating shall be removed;

.6 in addition to 4.11.3.3, for ships of 15 years of age and over the structures ensuring strength and/or watertightness (e.g. hull shell plating, upper deck plating and platform with framing, decks of superstructures and deckhouses with framing, comings of superstructures and deckhouses, coamings and cargo hold hatch covers, air pipes and ventilator pipes on the exposed decks, skylights, etc.), in the case of pitting found on these structures, the RS surveyor may require from the shipowner their cleaning to bare metal at least in way of pitting.

Exception may only be given to the structures having a hard protective coating previously applied thereto to prevent further development of pitting, and identified as being in GOOD condition provided the evidence of applying the coating is recorded in the RS reporting documentation (in the Ship's Survey Statement as per form 6.1.03 and the List of Survey's Status).

4.11.4 Safety requirements for work being performed in enclosed and confined spaces.

When performing works in enclosed and confined spaces, safety requirements specified in IACS PR No. 37 "Procedural Requirement for Confined Space Safe Entry" as well as in the internal instructions on occupational safety of the RS surveyors conducting survey of ships and items of the RS technical supervision shall be met.

4.11.5 Access to structures.

The shipowner shall provide access to the items of survey, namely:

.1 means shall be provided to enable the surveyor to examine the hull structure in a safe and practical way;

.2 for survey of cargo holds and ballast tanks one or more of the following means for access, acceptable to the surveyor, shall be provided:

permanent staging and passages through structures;

temporary staging/scaffolding and passages through structures;

lifts and movable platforms;

boats or rafts;

other equivalent means.

4.11.6 Equipment for survey.

4.11.6.1 Thickness measurements shall normally be carried out by means of ultrasonic test equipment. The accuracy of the equipment shall be proven to the surveyor as required. Requirements for instruments intended for measuring the parameters of structural defects, as well as the procedure for such measuring are given in Annex 2 to these Rules.

4.11.6.2 One or more of the following fracture detection procedures may be required, if deemed necessary by the surveyor:

radiographic testing;

ultrasonic testing;

magnetic particle testing;

dye penetrant testing or other non-destructive testing.

4.11.7 Survey at sea or at anchorage.

At the shipowner's discretion, the survey of hull components of the ship and offshore installation at sea or at anchorage may be accepted provided the following measures have been taken by the shipowner and the personnel onboard to ensure safe execution of the survey by the RS surveyor(s):

.1 precautions and procedures for carrying out surveys shall be in accordance with 4.11.3 — 4.11.6;

.2 a communication system shall be arranged between the survey party in the tank and the responsible officer on deck. This system shall also include the personnel in charge of ballast pump handling if boats or rafts are used;

.3 when boats or rafts are used, appropriate life jackets shall be available for all participants. Boats or rafts shall have satisfactory residual buoyancy and stability even if one chamber is ruptured. The shipowner shall develop a safety checklist for execution of such surveys;

.4 surveys of tanks by means of boats or rafts may only be undertaken at the sole discretion of the surveyor, who shall take into account the safety arrangements provided, including weather forecasting and ship response in reasonable sea conditions (refer also to IACS Recommendation No. 39 "Guidelines for Use of Boats or Rafts for Close-Up Surveys").

4.12 The requirements on the dates for forwarding shipowner's requests for the ships' survey and the organization of the requests' execution by the Register are given in Section 4, Part I "General Provisions" of the Guidelines.

4.13 The surveyor has the right to reject execution of the survey if the ship or item of the survey is inadequately prepared for survey execution, and in case of the defects revealed, which affect survey and/or test safety, the surveyor shall withdraw the survey. At that the report with the comments on the surveyor's decision shall be submitted to the ship.

4.14 Survey with the use of remote inspection technique(s) (RIT).

4.14.1 At close-up surveys of hull structures of ships and offshore installations, except for the ships covered by the provisions of Sections 2, 3, 5 and 6, Part III "Additional Surveys of Ships Depending on their Purpose and Hull Material", the RS attending surveyor may agree upon the use of RIT as an alternative to such close-up survey. For the ships covered by the provisions of Sections 2, 3, 5 and 6, Part III "Additional Surveys of Ships Depending on their Purpose and Hull Material", the possibility to use RIT as an alternative to close-up survey, shall be agreed upon with RHO and, if required, with Flag State MA (for ships covered by the ESP Code).

4.14.2 Surveys with the use of RIT shall be carried out in the presence of the RS surveyor, and the latter shall evaluate the obtained results. Where RIT is used for close-up survey, unless RIT is intended for thickness measurements, a shipowner or an authorized shipowner's representative shall provide means of access to structures to perform relevant thickness measurements in compliance with the requirements of these Rules.

4.14.3 Remote inspection technique(s) (RIT).

.1 RIT shall provide the information normally obtained from a close-up survey with the RS surveyor's direct physical access (a conventional method). RIT surveys shall be carried out in accordance with the requirements of this Chapter of the Rules and Annex 39 to the Guidelines. These considerations shall be included in the inspection plan for use of RIT, which shall be submitted to the Register in advance of the survey for review and approval in accordance with the provisions of Annex 39 to the Guidelines;

.2 equipment and procedure for observing and reporting the RIT survey shall be discussed and agreed with the parties involved prior to the RIT survey, and suitable time shall be allowed to set-up, calibrate and test all equipment beforehand;

.3 when RIT survey as an alternative to close-up survey is not carried out by the Register itself, it shall be conducted by a firm recognized by the Register in accordance with Section 9 of Part I "General Regulations for Technical Supervision" of RTSCS, taking into account the provisions of Section 7, Part I "General Provisions" of these Rules, and shall be witnessed by an attending RS surveyor. When RIT is used, a service supplier and contractors thereof are responsible for safety and integrity of the items of technical supervision;

.4 the structures to be surveyed using RIT shall be sufficiently clean to permit meaningful examination (thorough examination) (refer to 4.11.3). Visibility shall be sufficient to allow for thorough examination. The Register shall be satisfied with the methods of orientation on the structure;

.5 the RS surveyor shall be satisfied with the method of data presentation as to their completeness, validity and accuracy, including pictorial representation, and a good two-way communication between the RS surveyor and RIT operator shall be provided;

.6 if the RIT survey reveals damage and/or deterioration that requires attention, the RS surveyor may require traditional survey without the use of RIT to be undertaken;

.7 for surveys conducted by use of RIT, one or more of the following means agreed with the Register and, acceptable to the RS surveyor, shall be provided:

unmanned robot arm;
remotely operated platforms, including ROV;
unmanned aerial vehicles (UAV/drones);
climbers;
divers;
other means acceptable to RS.

4.15 Remote surveys.

4.15.1 General.

4.15.1.1 Remote survey is a survey carried out by RS without the physical presence of the RS surveyor on board the ship with submission of photos and/or video footage, or by means of live video streaming with two-way communication between RS and the ship.

4.15.1.2 The purpose of survey is to remotely obtain the objective and complete information on the condition of the item of technical supervision without the physical presence of the RS surveyor on board the ship.

4.15.1.3 The shipowner is responsible for the quality and reliability of information submitted both using photos and/or video footage and live video streaming. The submitted photos and/or video footage shall clearly identify the condition of the submitted items and its belonging to a particular ship.

4.15.1.4 If during the remote survey, in the RS opinion, it is not possible to obtain complete and objective information on the condition of the items of technical, RS shall notify the shipowner on the necessity to submit the item in the presence of the RS surveyor on board the ship.

4.15.1.5 The possibility and conditions for carrying out the remote survey shall be reviewed and determined by RHO.

When determining the possibility and conditions for conducting the remote survey, the following shall be taken into account:

age of ship;

results of ship's inspection by Port State Control (PSC) and/or Flag State Control (FSC) since the last periodical survey;

temporary period since the last periodical survey;

presence and nature of the requirements in the RS reports.

4.15.1.6 The shipowner shall send an application to RHO or RS Branch Office for carrying out a remote survey at least 48 h prior to the planned submission of the item.

4.15.1.7 The remote survey shall be carried out by the RS Branch Office on behalf of and with the participation of RHO.

4.15.1.8 If a remote survey is carried out for compliance with the requirements of international conventions, the possibility and conditions for conducting such remote survey shall be agreed by RHO with the ship's Flag State MA.

4.15.1.9 The surveys aimed at the following may be performed remotely:

extension of due date for submission of the shafting for survey up to 3 months;

extension of due date for submission of underwater hull for survey up to 3 months;

extension of due date for submission of auxiliary boiler for internal survey up to 3 months;

verification of survey of the CSS item previously performed by the chief engineer;

extension of the terms of fulfillment of the requirements for the RS reports;

confirmation of fulfillment of the requirements for the RS reports.

4.15.1.10 The provisions of this Chapter do not apply to:

initial, special, intermediate and annual surveys of ships;

surveys of ships under special surveillance regime (SSR) and fleet monitoring system;

surveys of hull structures of ships over 15 years of age which are subject to survey according the enhanced survey programme (ESP).

4.15.1.11 Instructions on performing remote surveys listed in 4.15.1.9 are given in Annex 11 to the Guidelines.

5 ASSESSMENT OF THE SHIP TECHNICAL CONDITION

5.1 Assessment of technical condition of the ship's hull, arrangements, equipment and outfit, machinery installation and refrigerating plant, electrical equipment is a basis for assignment, retainment, confirmation, reinstatement, renewal and reassignment of the ship's class; it is also required for assessment of the necessary scope of repairs.

5.2 Responsibility for technical condition of the ship's hull, its machinery, equipment, arrangements, systems and outfit, as well as their maintenance in operational condition for ships in service is within duties of the shipowner, who shall ensure performance of required checks and examinations for detection of possible defects and faults. If defects and faults affecting the ship safety are detected, the shipowner shall inform the Register representative about it.

The shipowner shall be responsible for maintenance of the ship after survey in conformity with the applicable requirements of the RS rules and international conventions.

5.3 The Register carries out assessment of the technical condition of items of supervision during examinations, measurements, verifications and operational testing, which scope is specified in the relevant Parts of these Rules.

5.4 Assessment of technical condition of items of supervision is carried out by the Register on the basis of permissible defects limits given in these Rules and the Guidelines, other Register-approved normative documents, manufacturers' operation manuals for machinery, arrangements and equipment.

5.5 When assessing the technical condition of items of technical supervision, the main defects are the following:

w e a r — reduction of strength dimensions of structures and components or deterioration of material quality in operation due to corrosion, erosion, fatigue, galling of contacting parts of flexible joints, chafing, rotting, mould or mustiness (wood, tarpaulin, fibre ropes, etc.). For definition of wear of hull members refer to Annex 2 to these Rules;

d a m a g e — change of shape or break of structures and components integrity, such as: destructions, ruptures, fractures, cracks, breakages and other defects, parameters of which do not comply with the RS requirements;

f a u l t — failure of reliable operation of machinery and equipment, such as: failure (breakdown), misalignment, abnormal functioning of engines, bearings and equipment (high vibration, noise, temperature), incorrect readings of instrumentation, etc.

5.6 For ships in service, the technical condition of items of technical supervision complying with the RS requirements means that they are in technical condition recognized as fit for service, i.e. they are capable of performing their functions, while the parameters of operational defects are within the permissible limits.

5.7 If during the survey, the technical condition of the ship's hull, arrangements, equipment and outfit, machinery installation or refrigerating plant, electrical equipment, etc. is found not to comply with the applicable requirements of these Rules, the technical condition of the ship shall be recognized as not complying with the RS requirements, and classification documents confirming the RS class shall not be issued/endorsed until the identified nonconformities are eliminated and technical condition of the ship's items of technical supervision is brought into line with the applicable requirements of these Rules.

Nonconformities (damages, faults, etc.) identified during the ship survey affecting safe operation of ships and FOP in accordance with their purpose, safety of life at sea and safe carriage of goods by sea and inland waterways as well as pollution prevention from ships shall be eliminated prior to survey completion at the port of the ship submission and prior to the ship departure. In case of the ship departure from the port of submission prior to survey completion and elimination of nonconformities, the Classification Certificate ceases to be valid and the ship class is automatically suspended in compliance with the requirements of Section 4, Part II "Carrying Out Classification Surveys of Ships" of the Guidelines.

The RS Branch Office which performed the survey shall immediately notify MA and administration of the port of submission about it. MA shall be advised by RHO.

5.8 If during the survey damages caused by structural deficiencies are detected (e.g. incorrect structure, insufficient strength, etc.), in addition to eliminating damages, measures shall be taken aimed at eliminating structural deficiencies, which have caused these damage.

5.9 If detected damages do not evidently affect safe operation of ships and FOP in accordance with their purpose, safety of life at sea and safe carriage of goods by sea and inland waterways as well as pollution prevention from ships, and their elimination is impossible or troublesome at the port of submission, then, at the shipowner's written request, the elimination of such damages may be extended, subject to review by the RS Branch Office which performed the survey of the ship, until the soonest scheduled repair or for the assigned term; in necessary cases temporary repair may be required and/or temporary service restrictions may be imposed (refer to Annex 17 to the Guidelines).

5.10 Damage and/or faulty condition of items of technical supervision installed onboard the ship in addition to mandatory items required by the Rules for Construction shall not be the basis for recognition of the ship technical condition as not complying with the RS requirements. However, if such damages or faulty condition of items of technical supervision may affect safe operation ships and FOP in accordance with their purpose, safety of life at sea or safe carriage of goods by sea and inland waterways as well as pollution prevention from ships, then they shall be eliminated or operation of such items shall be prohibited until they are in satisfactory condition.

5.11 Where during survey the damages unusual for the ship type, intended purpose and operation conditions are found, in addition to elimination of such damages, measures to prevent similar defects in future shall be taken to enable retainment, confirmation or renewal of class and, if necessary, competent experts shall be involved and calculations and tests shall be carried out.

5.12 Assessment of technical condition of hull structures shall be carried out in compliance with the requirements listed below according to the procedure given in Annex 2 to these Rules. These requirements are fully applicable for assessment of the hull technical condition during annual, intermediate, special, initial and other surveys.

5.12.1 Assessment of the hull technical condition is carried out on the basis of the results of visual examination, thickness measurements and tightness tests taking into account data on wear and other defects, repairs and replacements recorded in ship's reports, ship's files, sketches and entries in drawings, repair specifications, ship logs).

5.12.2 During assessment of technical condition of shell plating, bulkhead plating, duct keel plating, deck and inner bottom plating, plating of sea chests and chain lockers, plating of trunks and other compartment boundaries shall be examined outside and inside.

5.12.3 To assess the technical condition of hull structures the following standards shall apply:

.1 for a ship built to the RS class — standards determined according to Section 4 of Annex 2 to these Rules and based on as-built dimensions. The standards based on dimensions required by the Rules for Construction may be applied at the shipowner's discretion;

.2 for a ship transferred from a class of ACS — IACS member — standards determined according to the rules of a losing society. For a ship built in compliance with the rules of ACS — IACS member, the standards of ACS — IACS member as well as the standards based on dimensions required by the Rules for Construction may be applied at the shipowner's discretion. When assigning an ice class **Arc4** and higher to a ship, in the region of ice strengthening of the hull the standards, including those specified in Section 4 of Annex 2 to these Rules, and based on dimensions required for ice strengthening by the Rules for Construction shall be applied;

.3 for a ship transferred to RS class from the class of ACS — non-IACS member or a ship assigned the RS class as non-classed ship — standards determined according to Section 4 of Annex 2 to these Rules and based on dimensions required by the Rules for Construction. For a ship built in compliance with the rules of ACS — IACS member, the application of standards of ACS — IACS member shall in each case be reviewed by RHO;

.4 standards (acceptance criteria) determined according to IACS UR S18, S19, S21, S21A, S31, etc. — specific IACS URs and their subsequent revisions or corrigenda apply for ships depending on ship's age and structural elements concerned (e.g. for UR S19; S21, S31 refer to instructions in Part III "Additional Surveys of Ships Depending on their Purpose and Hull Material", for UR S21A refer to Annex 2 to these Rules, etc.);

.5 standards (acceptance criteria) determined according to IACS Common Structural Rules — to ships built under IACS Common Structural Rules (**CSR** ships). Information on acceptance criteria for hull structures is given in structural drawings;

.6 standards (acceptance criteria) determined according to Section 19, Part III "Additional Surveys of Ships Depending on their Purpose and Hull Material" of these Rules — for MODU and FOP structures;

.7 standards (acceptance criteria) determined according to other sections of these Rules and other RS normative documents depending on the type of ship and offshore installation, material and purpose of the item of technical supervision.

5.12.4 The permissible residual scantlings calculated using standards specified in 4.2.1 — 4.2.5 of Annex 2 to these Rules shall be determined for all hull members, hull cross-sections, parameters of which are regulated by the Rules for Construction and for which the residual thickness measurements shall be performed when the ship is in service. The permissible residual scantlings calculations shall be agreed with the Register. The possibility of introduction of these calculations as permissible wear of hull structures in ship's file shall be finally decided by the RS Branch Office for in-service supervision (refer also to 5.12.7). Requirements for the content of residual scantlings calculations are given in 4.1.11 of Annex 2 to these Rules.

The permissible residual scantlings previously agreed with the Register may be used, including permissible hull section modulus, where no modifications in hull structures are made and all conditions specified in 4.2.2, 4.2.3 and 4.2.5 of Annex 2 to these Rules, as applicable to the value of permissible residual thickness, are complied with.

5.12.5 Depending on the actual condition of hull structures, the RS surveyor may require the thickness measurements and close-up survey to be extended beyond the scope prescribed by the relevant Parts of these Rules.

5.12.6 The results of the ship's hull technical condition assessment shall be submitted by the shipowner to the RS surveyor carrying out the survey in the form of set of records in accordance with 2.1.6 and 2.1.7 of Annex 2 to these Rules, as applicable.

In applicable cases, verification of the hull girder section modulus/ultimate section modulus according to 2.1.6 and 2.1.7 of Annex 2 to these Rules may be performed at the shipowner's request by the RS Branch Office or RHO Location having enough resources to perform this verification.

Set of records on results of hull technical condition assessment shall be agreed/certified by the Register prior to survey completion.

The set of records on hull technical condition assessment agreed/certified by the Register shall be kept on board the ship as well as in the ship file in accordance with the RS internal procedures.

5.12.7 The Register bears responsibility for correct wear standards used for technical condition assessment. At that, the provisions of this Chapter, Annex 2 to these Rules, including those regarding the established procedure for checking the availability/updating of information on the permissible scantlings of hull structures and other ship's elements shall be met (refer to Annex 2-1 in Annex 2 to these Rules).

5.13 Damages to the hull structures which affect or, in the opinion of the RS surveyor, may affect the ship structural integrity, structural strength and/or watertight and weathertight integrity, shall be promptly and thoroughly repaired. Items of technical supervision to be considered include:

bottom structures and bottom plating;
side shell plating and side structures (including side shell frames, their end attachments);
deck structures and deck plating;
inner bottom plating and structures;
inner side plating and structures;
watertight or oiltight bulkheads;
hatch covers and hatch coamings;
welded connections of air pipes to deck plating;
air heads on the open decks;
ventilators including dampers.

Where the damage found on structures mentioned above is isolated and of a localized nature which does not affect the ship's structural integrity, the RS surveyor may agree upon the performance of temporary repair to restore watertight or weathertight integrity and impose a Condition of Class to carry out thorough repair within a specific time limit in accordance with Annex 17 to the Guidelines.

For a port of submission where adequate repair facilities are not available, at the shipowner's written request consideration may be given by the Register for a ship to proceed directly to port, where the required repair facilities are available. If necessary, this may require unloading and/or temporary repairs for the intended voyage. Additionally, when a survey results in the identification of structural defects or corrosion, either of which, in the opinion of the RS surveyor, may affect safety of further ship operation, remedial measures shall be implemented before the ship continues in service.

When choosing the repair methods and design, the requirements of Section 5 in Annex 2 to these Rules shall be met as well as of the documents listed in Annex 3 to these Rules.

When for longitudinal strength of hull girder the doubling straps are installed in compliance with the requirements of 5.2.2 of Annex 2 to these Rules, the assessment of the hull technical condition shall include close-up survey of these doubling straps and welds without dismantling thereof. Special attention shall be given to the integrity of butt welds. RS surveyor may require dismantling/repairing of doubling straps when their dimensions, configuration and location do not comply with the approved documentation on their installation, and in case of unsatisfactory condition of doubling straps and welds, hull structures under the doubling straps.

Survey results of doubling straps shall be recorded in the relevant RS reports/statements/ statuses.

6 SHIP'S DOCUMENTATION

6.1 GENERAL

6.1.1 Ship's documentation specified in 6.2 — 6.4 shall be kept on board and submitted during ship survey upon request of the RS surveyor.

6.1.2 For unmanned ships the storage and submission of documentation during survey shall be provided by the shipowner or authorized representative of the shipowner

6.1.3 For the ship to be accepted into the RS class (refer to 1.2 of Part II "Survey schedule and Scope" of these Rules), the additional requirements for the ship's documentation subject to submission to the Register are given in 4.8, Sections 5 and 6 of Part II "Carrying Out Classification Surveys of Ships" of the Guidelines..

6.2 SHIP'S DOCUMENTS ISSUED BY THE REGISTER

6.2.1 Summarized list of documents issued by the Register to a ship during surveys for confirmation of compliance with the requirements of the RS rules and international conventions, codes, agreements and national requirements is given in Section 6, Part I "General Provisions" of the Guidelines.

6.3 SHIP'S TECHNICAL DOCUMENTATION

6.3.1 A minimum list of ship's technical documentation is given in Annex 1 to these Rules (as applicable).

6.3.2 Upon agreement with the Register, the scope of required ship's technical documentation may be changed or reduced (except for mandatory documentation required by the Rules for Construction) if documentation of ACS or other technical supervisory bodies as well as manufacturer's documentation, which confirms compliance with the requirements of the Rules for Construction and international conventions, quality of materials used and workmanship, performance of required tests of items of technical supervision is available, provided the documentation submitted contains all information required for survey of the ship and drawing up the RS documents.

6.3.3 Reduction or alteration of the scope of required ship's technical documentation shall be reviewed by RHO or the RS Branch Office on its behalf.

6.3.4 Calculations necessary to verify compliance with the requirements of the RS Rules may be required by the RS surveyor, unless this compliance is determined directly from the documentation submitted.

6.3.5 If the shipowner is unable to submit any of the technical documentation contained in the list referred to in 6.3.1, they shall ensure that the RS surveyor obtains necessary information during the survey with preparation, when appropriate, of drawings on full-scale measurements and calculations. Where certificates or other documents confirming that the tests required by the Rules for Construction have been carried out are not available, the items of technical supervision shall be subjected to appropriate tests.

6.3.6 During conversion or modernization of the ship, alterations and replacements of hull structures, items of machinery installation and refrigerating plant and equipment, as well as repair of the ship, documentation on those parts of the ship hull, machinery and equipment, which are liable to alteration or restoration shall be submitted to the Register for approval. The scope of documentation submitted shall correspond to the scope of alterations and replacements performed.

6.3.7 Drawings of the shell plating expansions, double bottom plating and watertight bulkheads with indication of the plates replaced during previous repairs together with the results of testing for defects shall be available onboard all ships.

6.3.8 Where new machinery or arrangements covered by the RS Nomenclature are installed onboard the ship, which differ considerably from the original ones, technical documentation on the new items shall be submitted to the Register for approval in the scope required for initial survey of the ship.

6.3.9 Technical documentation subject to approval in accordance with 6.3.6 and 6.3.8 of this Part is reviewed by the Register in accordance with the requirements of Part II "Technical Documentation" of RTSCS.

6.4 SHIP'S OPERATIONAL DOCUMENTATION

6.4.1 A minimum list of ship's operational documentation is given in Appendix 1 to Part II "Technical Documentation" of RTSCS (as applicable). The scope of operational documentation is determined depending on the type of ship, its class notation (including distinguishing marks and descriptive notations), availability of machinery, equipment and arrangements, cargo carried, etc. taking into account the application of the requirements of international conventions, codes, agreements and national requirements to the ship.

6.4.2 In cases provided for in these Rules and the Guidelines, the Register may require availability on board the ship of other operational documentation not specified in 6.4.1.

6.4.3 Operational documentation subject to the Register approval (agreement) in accordance with the applicable requirements of the RS rules and guidelines, international conventions, codes, agreements and national requirements shall be submitted to the Register for review prior to its direct use on board the ship. Any amendments to the documentation approved (agreed) by the Register that may relate to the requirements regulated by the RS rules or international conventions shall be approved (agreed) by the Register based on the results of review.

6.4.4 Records in the ship's logs and files and other similar documents reflecting operation of ship and its items shall be maintained by the responsible crew members and the shipowner. The verification of such records and their content is carried out by the Register within the requirements of the RS rules and the guidelines, international conventions, codes, national requirements and in accordance with the Register authority established by agreements with the specified Flag State MA.

7 SERVICES PROVIDED BY SERVICE SUPPLIERS AND USED BY RS SURVEYORS DURING SHIPS' SURVEY

7.1 GENERAL

7.1.1 Service suppliers providing services on behalf of the shipowner or MODU owner, such as measurements, tests or maintenance of safety systems and equipment, and testing laboratories providing testing services, the results of which are used by RS surveyors in making decisions affecting classification, shall be recognized by the Register in accordance with the mandatory procedures set forth in Section 9 of Part I "General Regulations for Technical Supervision" of RTSCS. The list of services is given in 7.1.3 of this Part.

7.1.2 Where such services are used by the surveyors in making decisions affecting statutory certifications, the service suppliers shall be recognized by the Register where the latter is so authorized by the relevant MA. For such services, the Register may recognize the approvals of MA itself or duly authorized organizations acting on MA behalf.

7.1.3 Types of services provided by service suppliers, the results of which are used by surveyors to the Register during ships' survey.

7.1.3.1 Classification services and statutory services on MA behalf are the services listed in Section 9 of Part I "General Regulations for Technical Supervision" of RTSCS (refer to Table 9.1.1) and Section 10 of Part I "General Regulations for Technical Supervision" of RTSCS (refer to Table 10.1.1, code 21003000МК — Testing of coating systems in accordance with IMO resolution MSC.215(82) and/or MSC.288(87)).

7.1.3.2 Statutory services provided on MA behalf only, are the services listed in Section 9 of Part I "General Regulations for Technical Supervision" of RTSCS with the following codes (appropriate subtypes of services shall be taken into account):

22005000 — Survey and maintenance of life-saving appliances;

22006000 — Servicing and inspection of radio and navigational equipment;

22008000МК — Inspection and maintenance of self-contained breathing apparatus;

22015000МК — Inspections of low location lighting systems using photo luminescent materials and evacuation guidance systems used as an alternative to low-location lighting systems;

22016000МК — Sound pressure level measurements of public address and general alarm systems on board ships;

22021000МК — Maintenance, thorough examination, operational testing, overhaul and repair of lifeboats, rescue boats, launching appliances and release gear;

22028000 — Commissioning testing of ballast water management systems (BWMS).

7.1.4 Where the results of the services listed in 7.1.3.1, except those related to codes 22001001, 22002000, 22003000, 22025600 and 2202700 are used by the RS surveyors in making decisions affecting classification, then the service suppliers shall have recognition of the Register or Flag State MA (if applicable).

With respect to services with codes:

22001001 — Category I: firms engaged in thickness measurements under supervision of the RS surveyor on any ship types, other floating facilities (including floating docks, mobile offshore drilling units (MODUs), floating offshore oil-and-gas production units (FPUs)), and fixed offshore platforms (FOPs) regardless of their gross tonnage;

22002000 — Tightness testing of hatches, doors, etc. with ultrasonic equipment;

22003000 — In-water survey on ships and offshore installations by diver or remotely operated vehicle (ROV);

22025600 — Survey using remote inspection technique(s) (RIT) as an alternative means for close-up survey of the structure of ships and offshore installations;

22027000 — Watertight cable transit seal systems inspection on ships and offshore installations,

these service suppliers shall mandatorily have the RS recognition. In some cases (e.g. absence of the RS-recognized organization in the area of a ship submittal to survey, impossibility of a service supplier recognized by the Register to get to a place where the service shall be provided, etc.), the RS surveyor may give a permission to perform such works to an organization having a valid recognition of Flag State MA.

7.1.5 With respect to works performed on MA behalf, the RS surveyor shall follow the provisions of 1.8.14, Part III "Survey of Ships in Compliance with International Conventions, Codes, Resolutions and Rules for the Equipment of Sea-Going Ships" of the Guidelines.

7.1.6 Use of the recognized service suppliers (unless instructed otherwise by MA) with respect to services provided on MA behalf, is not mandatory for the services with codes:

22012000 — Examination of ro-ro ships bow, stern, side and inner doors;

22015000MK — Inspections of low location lighting systems using photo luminescent materials and evacuation guidance systems used as an alternative to low-location lighting systems;

22016000MK — Sound pressure level measurements of public address and general alarm systems on board ships;

22024000MK — Measurements of noise level onboard ships;

21003000MK — Testing of coating systems in accordance with IMO resolution MSC.215(82) and/or MSC.288(87) in accordance with Tables 9.1.1, 10.1.1 of Part I "General Regulations for Technical Supervision" of RTSCS, appropriately;

22026000 — Visual and/or sampling checks, development of hazardous material inventories.

7.1.7 In case the RS surveyor, when carrying out statutory surveys, uses the results of works performed by service suppliers, these service suppliers shall have the RS recognition or MA recognition, or recognition of an organization recognized by this MA (refer to 1.8.14, Part III "Survey of Ships in Compliance with International Conventions, Codes, Resolutions and Rules for the Equipment of Sea-Going Ships" of the Guidelines).

In case the RS surveyor, when carrying out classification surveys, uses the results of works performed by service suppliers, these service suppliers shall have the RS recognition. In some cases (e.g. absence of the RS-recognized organization in the area of a ship submittal to survey, impossibility of a service supplier recognized by the Register to get to a place where the service shall be provided, etc.), the RS surveyor may give a permission to perform such works to an organization having a valid recognition of ACS — IACS member on condition that before commencement of works the audit of the firm will be done by the RS surveyor to the extent as required by Section 9 of Part I "General Regulations for Technical Supervision" of RTSCS (as far as reasonable and practicable), except for requirements for practical demonstration and report preparation. The results of the audit performed by the Register shall be recorded in the relevant RS report (form 6.3.19 or form 6.3.29).

In all of the above cases, the shipowner and the service supplier not having the RS recognition nominated by the shipowner shall be warned that, if a service not compliant with the RS requirements and/or international requirements is provided, the works performed will not be accepted by the Register and they shall be performed again by the service supplier recognized by the Register.

7.1.8 In cases when, in compliance with the requirements of the RS rules and RS guidelines, the involvement of testing laboratories is necessary, the RS surveyor may accept the results of tests, sample analysis and etc. performed by the laboratories recognized by the Register or ACS — IACS member or accredited according to national standards.

PART II. SURVEY SCHEDULE AND SCOPE

1 INITIAL SURVEY

1.1 GENERAL

1.1.1 The aim of the initial survey of a ship in service shall determine whether it is possible to assign class to a ship being submitted for the Register classification for the first time, as well as to re-assign the RS class to the ship whose RS class was withdrawn. The initial survey is performed during transfer of class, assigning class to the ship constructed without the Register technical supervision, reassigning class for the ship whose RS class was withdrawn, when changing the existing notation of the RS class and assigning new class notation (only for items of technical supervision related to the new distinguishing mark or descriptive notation in the class notation), ship reactivation after lay-up or conservation, and in other cases as decided by RHO. The scope of initial survey shall be assigned in compliance with the applicable requirements of these Rules.

1.2 SURVEYS FOR TRANSFER OF SHIP'S CLASS AND ASSIGNMENT OF RS CLASS TO A SHIP IN SERVICE

1.2.1 General.

1.2.1.1 Transfer of class and assignment of RS class to a ship in service shall be carried out at the shipowner's written request.

1.2.1.2 Review of the matters relating to transfer of class and assignment of RS class to a ship in service as well as coordination of work in the Register, correspondence with MA and, when necessary, with ACS on these matters shall be within the competence of RHO.

1.2.2 Transfer of class for the ship classed by ACS — IACS member.

1.2.2.1 Procedure for transfer of class is given in 5.1 and 5.2, Part II "Carrying Out Classification Surveys of Ships" of the Guidelines.

1.2.2.2 The initial survey of the ship shall be performed by the RS Branch Office upon the RHO authorization in the scope specified therein.

1.2.3 Assignment of RS class to a ship having no class and a ship holding the class of ACS — non-IACS member.

1.2.3.1 Procedure for assignment of RS class to a ship in service is given in 5.1 and 5.3, Part II "Carrying Out Classification Surveys of Ships" of the Guidelines.

1.2.3.2 The initial survey of the ship shall be performed by the RS Branch Office upon the RHO authorization in the scope specified therein.

1.2.4 Surveys for retrieval of RS class.

1.2.4.1 At the shipowner's written request, the RS class may be retrieved to ships with withdrawn RS class provided the procedure for reassignment of class is carried out in accordance with 4.8, Part II "Carrying Out Classification Surveys of Ships" of the Guidelines.

1.2.5 Surveys for ships with double or dual class in case of assignment, retainment or withdrawal of class.

1.2.5.1 Surveys for ships with double or dual class in case of assignment, retainment or withdrawal of class involve review of the shipowners' requests pertaining to their intention to obtain or to withdraw from class of the second classification society, mutual obligations of the classification societies for retainment of their classes, exchange of information on condition of classes between the societies and preparation of the unified forms of documents to be issued, and submission of information to the IACS Permanent Secretariat.

1.2.5.2 The procedure as well as types of surveys to be carried out at different stages of assignment, retainment or withdrawal of class are given in 4.4 and Section 6, Part II "Carrying Out Classification Surveys of Ships" of the Guidelines. The scope of prescribed surveys is given in the relevant Chapters of these Rules.

2 PERIODICAL SURVEYS

The provisions of chapters in this Section are applicable to all the types of ships.

Additional requirements for surveys of hull structures, piping systems and ballast tanks applicable to self-propelled oil tankers, double skin oil tankers, chemical tankers, bulk carriers, double skin bulk carriers and ships carrying dry general cargoes are given in Sections 2 — 7 of Part III "Additional Surveys of Ships Depending on their Purpose and Hull Material".

Additional requirements for surveys of gas carriers are given in Section 8 of Part III "Additional Surveys of Ships Depending on their Purpose and Hull Material".

Additional requirements for surveys of water level detectors of single-hold dry cargo ships are given in Section 7 of Part III "Additional Surveys of Ships Depending on their Purpose and Hull Material".

Additional requirements for surveys of ships depending on their purpose and hull material are given in Part III "Additional Surveys of Ships Depending on their Purpose and Hull Material".

In addition, the requirements for inclining tests or light-weight checks specified in 1.5.1.2 — 1.5.1.7 and 1.5.5, Part IV "Stability" of the Rules for the Classification and Construction of Sea-Going Ships apply to all types of ships. Compliance with these requirements shall be mandatorily verified by the RS surveyors to confirm their fulfillment within the time limit prescribed for certain types of ships, and in cases specified in the above requirements.

Application of provisions of this Section when carrying out periodical surveys of the hull (refer to 2.2.2, 2.3.2 and 2.4.2) and machinery installations (refer to 2.2.5, 2.3.3, 2.4.5.1.3, 2.4.5.3.2, 2.6 and 2.10) of commercial ships, which are owned or chartered by governments and are used as combat or support ships in military operations, shall in each case be reviewed by the Register.

In relation to the periodical surveys of life-saving appliances and arrangements, signal means, radio equipment and navigational equipment the provisions this Section are applied to the ships, for which the Equipment Certificate is issued under the provisions of the Rules for the Equipment of Sea-Going Ships.

2.1 SUMMARIZED SCOPE OF PERIODICAL SURVEYS OF A SHIP IN TABULAR FORM

2.1.1 The scope of periodical surveys and intervals between them are given in Tables 2.1.1-1 and 2.1.1-2 which contain the summarized list of items of technical supervision related to classification. In case the disputes regarding the determination of scope and schedule of surveys arise, the final decision shall be made on the basis of the requirements set forth in the relevant Sections of the Rules.

References to paras in Tables 2.1.1-1 and 2.1.1-2 relate to the text of the present Part unless expressly provided otherwise.

2.1.2 The scope of periodical surveys for ships listed in 1.2.1 and 1.2.2, Part I "Classification" of the Rules for the Classification and Construction of Sea-Going Ships shall be not less than that given in Table 2.1.1-1.

The scope of periodical surveys for ships listed in 1.1.1 and 1.1.2, Part I "General" of the Rules for the Equipment of Sea-Going Ships shall be not less than that given in Table 2.1.1-2. Instructions on survey of life-saving appliances and arrangements, signal means, radio equipment and navigational equipment are also given in 4.1.1 — 4.1.4, Part III "Survey of Ships in Compliance with International Conventions, Codes, Resolutions and Rules for the Equipment of Sea-Going Ships" of the Guidelines.

The RS surveyor may extend the scope of surveys for these ships as deemed necessary.

2.1.3 Table specifying the scope and schedule of surveys of refrigerating plant is given in Part IV "Surveys of Refrigerating Plants".

2.1.4 The extent of particular examinations, measurements, testing, etc. set forth in 2.1.1, 2.1.2 and 2.1.3 is minimal and may be changed by the RS surveyor based on the valid instructions and specific conditions.

Table 2.1.1-1

SCOPE OF PERIODICAL SURVEYS OF A SHIP
Part 1. Items of survey within the scope of application of the Rules for the Classification and Construction of Sea-Going Ships and the Load Line Rules for Sea-Going Ships

Symbols:

O — examination with access, opening-up or dismantling being provided where necessary; close-up survey (where applicable according to these Rules);
C — external examination;
M — measurements of wears, clearances, insulation resistance, etc., actual actuation parameters of all types of protection after their check and regulation for compliance with the specified values;
H — pressure tests (hydrostatic, hydraulic, pneumatic, hydropneumatic), tightness tests (penetration, hose tests and others allowed by RS), proof/working load tests, proof/working pressure tests, whatever is applicable;
P — operational testing of machinery, equipment and arrangements, external examination included;
E — control of the availability of necessary documentation as well as valid documents and/or stamps testifying to the instrumentation being calibrated, if subject thereto.

Nos.	Item to be surveyed	Survey of a ship											
		Annual	Intermediate	Special	Annual	Intermediate	Special	Annual	Intermediate	Special	Annual	Intermediate	Special
		Age* ≤ 5 years			5 < Age* ≤ 10 years			10 < Age* ≤ 15 years			Age* > 15 years		
1	2	3	4	5	6	7	8	9	10	11	12	13	14
1	**Hull**	Requirements for bottom survey — refer to 2.5 of this Part. At that it shall be noted that in some cases bottom survey may be carried out later than the intermediate survey (refer to 2.5.6.3 of this Part)											
1.1	Underwater hull (external examination)	Basic requirements for survey, tests, thickness measurements of hulls of all ship types all ship types — refer to 2.2 — 2.5 this Part; additional requirements for survey of ESP ships, gas carriers, general dry cargo ships, passenger ships — refer to 2 — 9 of Part III "Additional Surveys of Ships Depending on their Purpose and Hull Material"											
1.2	Above-water hull (external examination)	Basic requirements for survey, tests, thickness measurements of hulls of all ship types — refer to 2.2 — 2.5 this Part; additional requirements for survey of ESP ships, gas carriers, general dry cargo ships, passenger ships — refer to 2 — 9 of Part III "Additional Surveys of Ships Depending on their Purpose and Hull Material"											
1.2.1	Stems and stern frames	C	C	O	C	C	O	C	C	O	C	C	O
1.2.2	Shell plating	C	C	O	C	C	OM 2.4.2.6.5	C	C	OM 2.4.2.6.6	C	C	OM 2.4.2.6.7
1.2.3	Upper deck plating	C	C	O	C	C	OM 2.4.2.6.5	C	C	OM 2.4.2.6.6	C	C	OM 2.4.2.6.7
1.2.4	Superstructures, deckhouses, engine and boiler casings (shell plating, decks, bulkheads)	C	C	O	C	C	OM 2.4.2.6.5	C	C	OM 2.4.2.6.6	C	C	OM 2.4.2.6.7

Nos.	Item to be surveyed	Survey of a ship											
		Annual	Intermediate	Special	Annual	Intermediate	Special	Annual	Intermediate	Special	Annual	Intermediate	Special
		Age* ≤ 5 years			5 < Age* ≤ 10 years			10 < Age* ≤ 15 years			Age* > 15 years		
1	2	3	4	5	6	7	8	9	10	11	12	13	14
1.3	Inner compartments	Basic requirements for survey, tests, thickness measurements of hulls of all ship types — refer to 2.2 — 2.5 this Part; additional requirements for survey of ESP ships, gas carriers, general dry cargo ships, passenger ships — refer to Sections 2 — 9 of Part III "Additional Surveys of Ships Depending on their Purpose and Hull Material". Shell and deck plating, platforms and inner bottom, bottom, side and deck framing, pillars, watertight bulkheads and recesses, trunks, tunnels and other internal structures are surveyed from inside the spaces											
1.3.1	Ballast tanks, deep tanks, cofferdams, cargo holds used for water ballast (together with sounding and air pipes)			OH 2.4.2.2	C 2.2.2.3.2	C 2.3.2.1.1	OH 2.4.2.2	C 2.2.2.3.2	C 2.3.2.1.1	OHM 2.4.2.2	C 2.2.2.3.2	C 2.3.2.1.1	OHM 2.4.2.2
1.3.2	Void spaces, cofferdams, duct keel, pipe tunnels, deep tanks, peak tanks (other than ballast tanks), pump rooms, chain lockers			O			O			OM			OM
1.3.3	Independent tanks (together with sounding and air pipes)	Requirements for internal examination — refer to 2.4.2.2.3 of this Part, for tests — refer to 2.4.2.5 of this Part											
1.3.4	Sea chests, trunks for logs, echo-sounders, submerged and rotary-submerged arrangements	C 2.5 (if applicable)	C 2.5	O 2.5	C 2.5 (if applicable)	C 2.5	OMH 2.4.2.5, 2.5	C 2.5 (if applicable)	OM 2.4.2.5, 2.5	OMH 2.4.2.5, 2.5	C 2.5 (if applicable)	OM 2.4.2.5, 2.5	OMH 2.4.2.5, 2.5
1.3.5	Fuel oil tanks, lube oil tanks, fresh water tanks, vegetable oil tanks, whale oil tanks, sewage holding tanks and others (together with sounding and air pipes)	Requirements for internal examination — refer to 2.4.2.2.3 of this Part, for tests — refer to 2.4.2.5 of this Part											
1.3.6	Cargo spaces	Requirements for internal examination of cargo spaces of all ship types — refer to 2.2, 2.3, 2.4 of this Part, for tests — refer to 2.4.2.5 of this Part. Additional requirements for survey, tests, thickness measurements within the cargo spaces of oil tankers, combination carriers, bulk carriers, chemical tankers, ore carriers, gas carriers — refer to Sections 2 — 8 of Part III "Additional Surveys of Ships Depending on their Purpose and Hull Material"											
1.3.7	Machinery spaces:												
	.1 main and auxiliary machinery spaces, refrigerating plant spaces, boiler and cargo pump spaces in tankers, trunks and casings of the above mentioned spaces, shaft tunnels	C	C	O	C	C	O	C	C	OM 2.4.2.6.6	C	C	OM 2.4.2.6.6
	.2 seatings of main and auxiliary machinery and boilers			O			O			OM 2.4.2.6.5			OM 2.4.2.6.5
	.3 pump rooms in oil tankers, combination carriers, chemical tankers and gas carriers	C	C	O	C	O	O	C	O	O	C	O	O
1.3.8	Other spaces in hull, superstructures and deckhouses			O			O			OM 2.4.2.6.6			OM 2.4.2.6.6
1.3.9	Flexible connection of deckhouses	C	C	CM		C	CM		C	CM		C	CM
1.3.10	Air pipe automatic heads	C 2.4.2.7	C 2.4.2.7	O 2.4.2.7	C	C 2.4.2.7	O 2.4.2.7	C	C 2.4.2.7	O 2.4.2.7	C	C 2.4.2.7	O 2.4.2.7
1.3.11	Air pipes located above decks	C	C	O	C	C	OM 2.4.2.7.3	C	C	OM 2.4.2.7.3	C	C	OM 2.4.2.7.3
1.4	Anticorrosive protection and coatings	The scope and procedure of survey are determined proceeding from the protection method and type in compliance with the applicable provisions of Part II "Survey Schedule and Scope" and Part III "Additional Surveys of Ships Depending on Their Purpose and Hull Material" (refer to 2.12)											
1.5	Loading instrument	EP	EP	EP	EP	EP	EP	EP	EP	EP	EP	EP	EP
1.6	Stability Instrument	EP	EP	EP	EP	EP	EP	EP	EP	EP	EP	EP	EP

Nos.	Item to be surveyed	Survey of a ship											
		Annual	Intermediate	Special	Annual	Intermediate	Special	Annual	Intermediate	Special	Annual	Intermediate	Special
		Age* ≤ 5 years			5 < Age* ≤ 10 years			10 < Age* ≤ 15 years			Age* > 15 years		
1	2	3	4	5	6	7	8	9	10	11	12	13	14
1.7	Coamings of hatches, companionways and ventilators	C	C	O	C	C	OM 2.4.2.6.5	C	C	OM 2.4.2.6.6	C	C	OM 2.4.2.6.7
1.8	Bulwark and freeing ports, guard rails	C	C	O	C	C	O	C	C	O	C	C	O
1.9	Seatings of winches, windlasses and capstans, stoppers, bollards, fairleads and bitts						O			OM 2.4.2.6.6			OM 2.4.2.6.7
1.10	Load line and draught marks	C	C	C	C	C	C	C	C	C	C	C	C
2	**Arrangements, equipment and outfit**												
2.1	Closures												
2.1.1	Hatch covers and closures of manholes on open deck areas and inside superstructures, which are not enclosed, outer doors of superstructures and deckhouses, companionways, skylights and ventilating trunks, ports and scuttles, doors for vehicle loading, covers of ventilator cowls	O	O	OH 2.4.3.2	O	O	OH 2.4.3.2	O	O	OH 2.4.3.2	O	O	OH 2.4.3.2
2.1.2	Tweendeck hatch covers			O			O			O			O
2.1.3	Watertight bulkhead doors	OP	OP	OP	OP	OP	OP	OP	OP	OP	OP	OP	OP
2.1.4	Closing gear with indicators	P	P	P	P	P	P	P	P	P	P	P	P
2.2	Steering gear	For the scope of the steering gear electric drive survey — refer to 7.6.2 of this Table											
2.2.1	Rudder blade, steering and fixed nozzles of propellers, rudder tube			C 2.4.3.3		C 2.5.7.4; 2.5.8	CM 2.4.3.3		C 2.5.7.4; 2.5.8	CM 2.4.3.3		C 2.5.7.4; 2.5.8	CM 2.4.3.3
2.2.2	Rudder stock, rudder axle, rudder pintles, rudder bearings, couplings (muff couplings, keys, bolts, etc.)			OM 2.4.3.3		OM 2.5.7.4; 2.5.8	OM 2.4.3.3		OM 2.5.7.4; 2.5.8	OM 2.4.3.3		OM 2.5.7.4; 2.5.8	OM 2.4.3.3
2.2.3	Steering gear (main together with the control system and stations, as well as with rudder indicators)	PC	PC	OPM	PC	PC	OPM	PC	PC	OPM	PC	PC	OPM
2.2.4	Auxiliary and emergency steering gear (for ships, the keels of which were laid before 1 January 1999)	PC	PC	OPM	PC	PC	OPM	PC	PC	OPM	PC	PC	OPM
2.2.5	Rudder stop	C	C	C	C	C	C	C	C	C	C	C	C
2.3	Anchor arrangement	For the scope of anchor machinery survey, refer to 4.6.5; for the scope of the electric drive of anchor gear survey, refer to 7.6.1 of this Table											
2.3.1	Anchors and hawse pipes	C	C	OM 2.4.3.4	C	C	OM 2.4.3.4	C	C	OM 2.4.3.4	C	C	OM 2.4.3.4
2.3.2	Chain cables and wire ropes	C	C	O	C	C	OM	C	C	OM	C	C	OM
2.3.3	Stoppers and devices for releasing the chain cable	C	C	OP	C	C	OP	C	C	OP	C	C	OP
2.3.4	Spare parts	C	C	C	C	C	C	C	C	C	C	C	C
2.4	Mooring arrangement	For the scope of mooring machinery survey, refer to 4.6.6; for the scope of the electric drive of mooring machinery survey, refer to 7.6.3 of this Table											
2.4.1	Bollards, hawse pipes, fairleaders, ropes and other equipment	C	C	C	C	C	C	C	C	C	C	C	C
2.5	Towing arrangement	For the scope of towing winch survey, refer to 4.6.7; for the scope of the electric drive of towing winch survey, refer to 7.6.4 of this Table											
2.5.1	Tow hook (for tugs only)	C	C	OP	C	C	OP	C	C	OP	C	C	OP

Nos.	Item to be surveyed	Survey of a ship											
		Annual	Intermediate	Special	Annual	Intermediate	Special	Annual	Intermediate	Special	Annual	Intermediate	Special
		Age* ≤ 5 years			5 < Age* ≤ 10 years			10 < Age* ≤ 15 years			Age* > 15 years		
1	2	3	4	5	6	7	8	9	10	11	12	13	14
2.5.2	Towing rails, towing arch, rope stoppers (for tugs only)	C	C	O	C	C	O	C	C	O	C	C	O
2.5.3	Bollards, towing bitts, fairleads, chocks and tow lines	C	C	O	C	C	O	C	C	O	C	C	O
2.5.4	Emergency towing arrangements on ships	C	C	OP	C	C	OP	C	C	OP	C	C	OP
2.6	Signal masts												
2.6.1	Masts			O			O			OM			OM
2.6.2	Standing rigging			O			O			O			O
2.7	Emergency outfit			C			C	C		C			C
2.8	Cargo securing devices	C	C	OM	C	C	OM	CE	C	OM	C	C	OM
2.9	Embarkation and disembarkation means	P	P	PE or PH (if applicable)	P	P	PE or PH (if applicable)	P	P	PE or PH (if applicable)	P	P	PE or PH (if applicable)
3	**Fire protection**												
3.1	Structural fire protection												
3.1.1	Fire-fighting bulkheads and decks, and closures of openings therein	C	C	O	C	C	O	C	C	O	C	C	O
3.1.2	Closures of openings in fire-fighting divisions (decks, bulkheads)												
3.1.2.1	Fire doors	P	P	OP	P	P	OP	P	P	OP	P	P	OP
3.1.2.2	Fire dampers	P	P	CP	P	P	CP	P	P	CP	P	P	CP
3.1.2.3	Closing appliances of external openings (ventilation ducts, annular space of stacks, skylights, etc.)	P	P	CP	P	P	CP	P	P	CP	P	P	CP
3.1.3	Passages in / through fire-fighting divisions (pipelines, vent pipes), cable penetration through fire-fighting bulkheads and decks	C	C	O (H — if necessary)	C	C	O (H — if necessary)	C	C	O (H — if necessary)	C	C	O (H — if necessary)
3.2 **3.2.1**	Fire extinguishing systems Water fire main system, pressure water spraying system, water screen system, drenching system	P	P	OP	P	P	OP	P	P	OPH 2.4.4.1.5	P	P	OPH 2.4.4.1.5
3.2.2	Carbon dioxide smothering system, sprinkler system, foam fire extinguishing system, inertgas system and dry powder system, halon smothering system	PE	PE	OPE	PE	PE	OPHE	PE	PE	OPE	PE	PE	OPHE
3.2.3	Fire-fighting outfit, spares and tools, motor pumps and smoke suction fans	CP (E — if applicable)	CP (E — if applicable)	CP (E — if applicable)	CP (E — if applicable)	CP (E — if applicable)	CP (E — if applicable)	CP (E — if applicable)	CP (E — if applicable)	CP (E — if applicable)	CP (E — if applicable)	CP (E — if applicable)	CP (E — if applicable)
3.2.4	Drawings and diagrams according to 1.4, Part IV "Fire Protection" of the Rules for the Classification and Construction of Sea-Going Ships	C	C	C	C	C	C	C	C	C	C	C	C
3.2.5	Aerosol fire extinguishing system	C	C	OEMP	C	C	OEMP	C	C	OEMP	C	C	OEMP
4	**Machinery installation**	For operational testing carried out during annual survey, refer to 2.2.5.3; for operational testing carried out during special survey, refer to 2.4.5.2.1.5 of this Part											
4.1	Internal combustion engines												
4.1.1	Main internal combustion engine	P	P	P	P	P	P	P	P	P	P	P	P

Nos.	Item to be surveyed	Survey of a ship											
		Annual	Intermediate	Special	Annual	Intermediate	Special	Annual	Intermediate	Special	Annual	Intermediate	Special
		Age* ≤ 5 years			5 < Age* ≤ 10 years			10 < Age* ≤ 15 years			Age* > 15 years		
1	2	3	4	5	6	7	8	9	10	11	12	13	14
4.1.1.1	Frame:												
	.1 bed plate, columns, crankcase, reamed bolts and chocks, dampers, safety devices, cylinder cover bolts			O			O			O			O
	.2 cylinder liners			OM 2.4.5.2.1.4			OM 2.4.5.2.1.4			OM 2.4.5.2.1.4			OM 2.4.5.2.1.4
	.3 tie rods			OM			OM			OM			OM
	.4 cylinder blocks and covers			OH			OH			OH			OH
4.1.1.2	Piston assembly:												
	.1 pistons, crossheads, guides, rods, connecting rods, gudgeon pins, telescopic system			OM 2.4.5.2.1.4			OM			OM			OM
	.2 top-end, connecting rod and crosshead bearings and their bolts (refer to 2.4.5.2.1.4 of this Part)			OM			OM			OM			OM
4.1.1.3	Crankshaft:												
	.1 journals, crank pins and thrust collar (refer to 2.4.5.2.1.4 of this Part)			OM			OM			OM			OM
	.2 main bearings and their studs			OM			OM			OM			OM
	.3 crank-web clearance (crankshaft deflection)		M	M		M	M		M	M		M	M
	.4 crankshaft sag			M			M			M			M
	.5 crankshaft detachable couplings			OM			OM			OM			OM
	.6 pins fixing balance weights on crankshaft webs			OM			OM			OM			OM
4.1.1.4	Distributing devices (valve drives; suction, exhaust and starting air valves), links and levers of synchronizing mechanisms, valve plates, exhaust passages and gas collectors			OM			OM			OM			OM
4.1.1.5	Safety valves (refer to 2.4.5.2.1.3 of this Part)			P			P			P			P
4.1.1.6	Lubricating devices (lubricators, etc.)			P			P			P			P
4.1.1.7	Gear and disengaging couplings:												
	.1 casings, reamed bolts and chocks			O			O			O			O
	.2 shafts and bearings			OM			OM			OM			OM
	.3 pinions and gear wheels (gearing contact)			OM			OM			OM			OM
	.4 engagement parts			M			M			M			M
	.5 shaft positions — journal bearing clearances			M			M			M			M
	.6 elastic components	C	C	O	C	C	O	C	C	O	C	C	O
4.1.1.8	Maneuvering and starting devices, remote control arrangements	P	P	OP	P	P	OP	P	P	OP	P	P	OP
4.1.1.9	Speed governor and overspeed device	P	P	OP	P	P	OP	P	P	OP	P	P	OP
4.1.1.10	Auxiliary machinery driven by main engine	P	P	OMP	P	P	OMP	P	P	OMP	P	P	OMP
4.1.1.11	Shaft-turning gear			OP			OP			OP			OP
4.1.1.12	Torsional vibration damper, anti-vibrator (refer to 2.4.5.2.1.4 of this Part)	C	C	OM	C	C	OM	C	C	OM	C	C	OM

Nos.	Item to be surveyed	Survey of a ship											
		Annual	Intermediate	Special	Annual	Intermediate	Special	Annual	Intermediate	Special	Annual	Intermediate	Special
		Age* ≤ 5 years			5 < Age* ≤ 10 years			10 < Age* ≤ 15 years			Age* > 15 years		
1	2	3	4	5	6	7	8	9	10	11	12	13	14
4.1.1.13	Turbochargers and scavenging air blowers	P	P	OMP	P	P	OMP	P	P	OMP	P	P	OMP
4.1.2	Auxiliary internal combustion engines:	P	P	P	P	P	P	P	P	P	P	P	P
	.1 cylinders, pistons with connecting rods and their bearings, crankshafts and main bearings, covers and valves, bed plate, dampers, crankshaft drive gears, elastic couplings			OM			OM			OM			OM
	.2 speed governor and overspeed device	P	P	P	P	P	P	P	P	P	P	P	P
	.3 torsional vibration damper, antivibrator (refer to 2.4.5.2.1.4 of this Part)			M			M			M			M
	.4 turbochargers and scavenging air blowers	P	P	OMP	P	P	OMP	P	P	OMP	P	P	OMP
4.2	Steam engines	refer to 2.4.5.2.2											
4.3	Steam turbines												
4.3.1	Main steam turbine:	P	P	P 2.4.5.3.2.4	P	P	P 2.4.5.3.2.4	P	P	P 2.4.5.3.2.4	P	P	P 2.4.5.3.2.4
4.3.1.1	**.1** casings, nozzle boxes, reamed bolts and chocks, bolts for turbine split casings			O			O			O			O
	.2 guide vanes, diaphragms and sealings			O			O			O			O
	.3 distributing valves			O			O			O			O
4.3.1.2	Rotors with blades and disks			O			O			O			O
4.3.1.3	Rotor shafts:												
	.1 journals			OM			OM			OM			OM
	.2 journal and thrust bearings			O			O			O			O
	.3 position of rotor — clearances in thrust bearings			M			M			M			M
	.4 sealings			O			O			O			O
4.3.1.4	Couplings			OM			OM			OM			OM
4.3.1.5	Reduction gear:			P			P			P			P
	.1 casings, reamed bolts and chocks			O			O			O			O
	.2 shafts and bearings			OM			OM			OM			OM
	.3 gear wheels and pinions (gearing contact)			OM			OM			OM			OM
	.4 positions of shafts — clearances in journal and thrust bearings			M			M			M			M
4.3.1.6	Manoeuvring devices — manoeuvring valve	P	P	OP	P	P	OP	P	P	OP	P	P	OP
4.3.1.7	Control and protection (refer to 2.2.5.5 of this Part)	P	P	P	P	P	P	P	P	P	P	P	P
4.3.1.8	Shaft-turning gear			OP			OP			OP			OP
4.3.2	Auxiliary steam turbines and gear:	P	P	OP	P	P	OP	P	P	OP	P	P	OP
	.1 casings, rotors, turbine shafts, gears and couplings, shaft couplings, journal and thrust bearings, gear wheels			O			O			O			O
	.2 position of rotor — clearances in thrust and journal bearings			M			M			M			M
	.3 control and protection system	P	P	P	P	P	P	P	P	P	P	P	P

Nos.	Item to be surveyed	Survey of a ship											
		Annual	Intermediate	Special	Annual	Intermediate	Special	Annual	Intermediate	Special	Annual	Intermediate	Special
		Age* ≤ 5 years			5 < Age* ≤ 10 years			10 < Age* ≤ 15 years			Age* > 15 years		
1	2	3	4	5	6	7	8	9	10	11	12	13	14
4.4	Main gas turbines	P	P	P 2.4.5.3.3.4	P	P	P 2.4.5.3.3.4	P	P	P 2.4.5.3.3.4	P	P	P 2.4.5.3.3.4
4.4.1	Compressors:												
	.1 casings, fixing of casings			O			O			O			O
	.2 guide blades, sealings			O			O			O			O
4.4.2	Compressor rotors together with blades and disks			O			O			O			O
4.4.3	Shafts of compressor rotors:												
	.1 journals			OM			OM			OM			OM
	.2 journal and thrust bearings			O			O			O			O
	.3 position of rotor — clearances in thrust bearings			M			M			M			M
4.4.4	Turbines:												
	.1 casings, fixing of casings			O			O			O			O
	.2 guide blades, sealings			O			O			O			O
	.3 internal lagging and cooling channels			O			O			O			O
	.4 water cooling spaces			OH			OH			OH			OH
4.4.5	Turbine rotors with blades			O			O			O			O
4.4.6	Shafts of turbine rotors:												
	.1 journals			OM			OM			OM			OM
	.2 journal and thrust bearings			O			O			O			O
	.3 position of rotor — clearances in thrust bearings and casing			M			M			M			M
	.4 cooling channels, deflectors			O			O			O			O
4.4.7	Combustion chambers:												
	.1 split of casings, fastenings			O			O			O			O
	.2 flame tubes			O			O			O			O
4.4.8	Reduction gear (refer to 4.3.1.5 of this Table)												
4.4.9	Manoeuvring gear, manoeuvring valves	P	P	OP	P	P	OP	P	P	OP	P	P	OP
4.4.10	Control and protection			P			P			P			P
4.4.11	Shaft-turning gear			OP			OP			OP			OP
4.4.12	Air ducts and trunks of air supply	C	C	C	C	C	C	C	C	C	C	C	C
4.4.13	Air filters	C	C	C	C	C	C	C	C	C	C	C	C

Nos.	Item to be surveyed	Survey of a ship											
		Annual	Intermediate	Special	Annual	Intermediate	Special	Annual	Intermediate	Special	Annual	Intermediate	Special
		Age* ≤ 5 years			5 < Age* ≤ 10 years			10 < Age* ≤ 15 years			Age* > 15 years		
1	2	3	4	5	6	7	8	9	10	11	12	13	14
4.5	Shafting and propeller			P			P			P			P
		Testing is performed when main engine is operationally tested											
4.5.1	**Shafting**	Alignment check and shafting alignment, if required, shall be carried out during each dismantling of shafts, bearings, reamed chocks, as well as in the case of a major repair in part of the hull member replacement in way of shafting											
4.5.1.1	Thrust, intermediate shafts:												
	.1 journals, thrust collars, flanged and coupling joints			OM			OM			OM			OM
	.2 carrier and thrust bearings			O			O			O			O
	.3 reamed bolts and chocks of bearings			C			C			C			C
	.4 axial clearance			M		M 2.11	M		M 2.11	M		M 2.11	M
4.5.1.2	Propeller and strentube shafts:												
	.1 with continuous liners or made of corrosion-resistant materials, or oil-lubricated and closed loop system fresh water lubricated			OM 2.11		O	OM 2.11		O	OM 2.11		O	OM 2.11
	.2 not indicated in 4.5.1.2.1 of this Table			OM 2.11		O	OM 2.11		O	OM 2.11		O	OM 2.11
4.5.1.3	Sterntube arrangement:	If the shaft/stern shaft is not taken off, than O is not applicable											
	.1 sterntubes		C 2.5.7.5	OM 2.11		C 2.5.7.5	OM 2.11		C 2.5.7.5	OM 2.11		C 2.5.7.5	OM 2.11
	.2 sterntube bearings, strut bearings, seals		C 2.5.7.5	OM 2.11		C 2.5.7.5	OM 2.11		C 2.5.7.5	OM 2.11		C 2.5.7.5	OM 2.11
4.5.2	Propeller:		C 2.5.7.5	O		C 2.5.7.5	O		C 2.5.7.5	O		C 2.5.7.5	O
	.1 static balancing	Is carried out at every propeller repair											
	.2 propeller shaft fitting (adjusting)	At shaft, propeller, key replacement or during the examination of fitting surfaces											
	.3 parts of controllable pitch propeller, Voith-Schneider propellers and steerable propellers (refer to 2.11 of this Part)			OMH			OMH			OMH			OMH
	.4 fastening of propeller			O		C	O		C	O		C	O
	.5 CPP control system, pitch control unit			OMHP	P	P	OMHP	P	P	OMHP	P	P	OMHP
4.5.3	Main active means of the ship's steering (refer to 2.11 of this Part):	P	P	OMP		P	OMP		P	OMP		P	OMP
	.1 thrust bearing			OM			OM			OM			OM
	.2 azimuthing gear			OM			OM			OM			OM
	.3 seals, fasteners			O			O			O			O
	.4 corrosion protection			C			C			C			C
	.5 control system			OM		P	OM		P	OM		P	OM

Nos.	Item to be surveyed	Survey of a ship											
		Annual	Intermediate	Special	Annual	Intermediate	Special	Annual	Intermediate	Special	Annual	Intermediate	Special
		Age* ≤ 5 years			5 < Age* ≤ 10 years			10 < Age* ≤ 15 years			Age* > 15 years		
1	2	3	4	5	6	7	8	9	10	11	12	13	14
4.6	Auxiliary machinery												
4.6.1	Pumps (circulating, boiler, bilge, cooling water, feed, ballast, fire, fuel oil, lubricating oil, wet vacuum air and condensate), cargo pumps, bilge ejectors, generators and pumps of hydraulic systems, centrifugal fuel and oil separators, stripping pumps and inert gas system fans of oil tankers	P	P	OMP	P	P	OMP	P	P	OMP	P	P	OMP
4.6.2	Compressors:	P	P	P	P	P	P	P	P	P	P	P	P
	.1 cylinders, pistons, liners, connecting rods, crosshead and crankpin bearings, crankshaft and main bearings, cylinder covers and valves, elastic couplings			OMP			OMP			OMP			OMP
	.2 air coolers						H						H
	.3 safety valve	P	P	P	P	P	P	P	P	P	P	P	P
4.6.3	Ventilators in dangerous spaces, engine room and other spaces and boiler blowers	P	P	OMP	P	P	OMP	P	P	OMP	P	P	OMP
4.6.4	Anchor machinery	P	P	OPM	P	P	OPM	P	P	OPM	P	P	OPM
4.6.5	Mooring machinery			OPM			OPM			OPM			OPM
4.6.6	Machinery of launching appliances of boats and rafts	P	P	OPM	P	P	OPM	P	P	OPM	P	P	OPM
4.6.7	Towing winch with arrangements:	P	P	OMP	P	P	OMP	P	P	OMP	P	P	OMP
	.1 emergency release system	P 2.2.3.4.4	P 2.2.3.4.4	OPH 2.4.3.6.4	P 2.2.3.4.4	P 2.2.3.4.4	OPH 2.4.3.6.4	P 2.2.3.4.4	P 2.2.3.4.4	OPH 2.4.3.6.4	P 2.2.3.4.4	P 2.2.3.4.4	OPH 2.4.3.6.4
4.6.8	Mechanical telegraphs	P	P	P	P	P	P	P	P	P	P	P	P
4.7	Spare parts**	C	C	C	C	C	C	C	C	C	C	C	C
5	**Boilers, heat exchangers and pressure vessels**												
5.1	Main, auxiliary boilers, including waste-heat, water heating and thermal oil boilers												
5.1.1	Smoke tube (refer to 2.2.5.7 and 2.10 of this Part)	P/OMP	P/OMP	OMP	P	2.10	OMP	OMP	2.10	OMP	OMP	2.10	OMP
5.1.2	Gas tube (refer to 2.2.5.7 and 2.10 of this Part)	P/OMP	P/OMP	OMP	P	2.10	OMP	OMP	2.10	OMP	OMP	2.10	OMP
5.1.3	Water tube (refer to 2.2.5.7 and 2.10 of this Part)	P/OP	P/OP	OP	P	2.10	OP	OP	2.10	OP	OP	2.10	OP
5.1.4	Waste-heat	P/OP	P/OP	OP	P	2.10	OP	OP	2.10	OP	OP	2.10	OP
5.1.5	Thermal oil (refer to 2.10 of this Part)	P/OPH	P/OPH	OPH	P	2.10	OPH	P	2.10	OPH	P	2.10	OPH
5.1.6	Boiler fittings	P	P	OP	P	2.10	OP	P	2.10	OP	P	2.10	OP
5.1.7	Safety valves	P	P	OP	P	2.10	OP	P	2.10	OP	P	2.10	OP
5.2	Heat exchangers and pressure vessels												
5.2.1	Heat exchangers and their fittings:	P	P	OP	P	P	OHP	P	P	OP	P	P	OHP
	.1 safety valves	P	P	P	P	P	P	P	P	P	P	P	P
5.2.2	Air receivers and other pressure vessels, and their fittings:	P	P	OP	P	P	OHP 2.4.5.7.5	P	P	OP	P	P	OHP 2.4.5.7.5
	.1 safety valves	P	P	OP	P	P	OP	P	P	OP	P	P	OP
5.3	Spare parts**	C	C	C	C	C	C	C	C	C	C	C	C

Nos.	Item to be surveyed	Survey of a ship											
		Annual	Intermediate	Special	Annual	Intermediate	Special	Annual	Intermediate	Special	Annual	Intermediate	Special
		Age* ≤ 5 years			5 < Age* ≤ 10 years			10 < Age* ≤ 15 years			Age* > 15 years		
1	2	3	4	5	6	7	8	9	10	11	12	13	14
6	**Systems and piping**												
6.1	Bilge, ballast and heeling systems, remote drives:	P	P	OP	P	P	OP	P	P	OP	P	P	OP
	.1 scruppers carried through sides, decks, bulkheads and platforms, mud boxes, compensators			O			O			O			O
6.2	Liquid cargo system of oil tankers, oil-recovery ships, combination carriers, gas carriers and chemical tankers, compensators and earthing (refer to 2.4.6.2 of this Part)	C	C	O	C	O	O	C	O	O	C	O	O
6.3	Air, gas, vent, overflow and sounding pipes, cargo gas exhaust, blowing, gas-freeing and vent arrangement for tanks	C	C	O	C	C	O	C	C	O	C	C	O
6.4	Exhaust gas system, silencers and spark arresters			OP			OP			OP			OP
6.5	Ventilation system:												
	.1 vent ducts passing through watertight and fire-proof divisions, their flaps	P	P	OP 2.4.6.2.5	P	OP 2.4.6.2.5	OP 2.4.6.2.5	P	OP 2.4.6.2.5	OP 2.4.6.2.5	P	OP 2.4.6.2.5	OP 2.4.6.2.5
	.2 dangerous spaces (refer to 2.4.6.2.7 of this Part)	P	P	OP	P	OP	OP	P	OP	OP	P	OP	OP
	.3 access routes to the controls for closure of ventilation ducts (refer to 2.2.6.4 of this Part)	C	C	C	C	C	C	C	C	C	C	C	C
6.6	Oil fuel system of liquid and gas fuel, compensators, flexible joints and flame-retardant coatings:	P	P	OP	P	P	OP	P	P	OP	P	P	OP
	.1 gauges, liquid level indicators, quick-closing valves and self-closing valves as well as test cocks on tanks and pipes	C	C	O	C	C	O	C	C	OH	C	C	OH
6.7	Lubricating oil and hydraulic system:	P	P	OP	P	P	OP	P	P	OP	P	P	OP
	.1 liquid level indicators, quick-closing valves and self-closing valves as well as test cocks on tanks and pipes	C	C	O	C	C	O	C	C	OH	C	C	OH
6.8	Cooling water system	P	P	OPH	P	P	OPH	P	P	OPH	P	P	OPH
6.9	Compressed air system	P	P	OP	P	P	OPH 2.4.5.8.12	P	P	OP	P	P	OPH 2.4.5.8.12
6.10	Steam systems and organic-coolant systems:												
	.1 pressure live steam and boiler blow-off	P	P	OP	P	P	OPH 2.4.5.8.11	P	P	OP	P	P	OPH 2.4.5.8.11
	.2 thermal oil systems	P	P	OP	P	P	OP	P	P	OP	P	P	OP
	.3 fastening and spring hangers	C	C	OCM	C	C	OCM	C	C	OCM	C	C	OCM
6.11	Hydraulic gear system	P	P	OP	P	P	OP	P	P	OP	P	P	OP
6.12	Pipelines passing through oil fuel tanks, as well as liquid cargo tanks without ducts			OHP 2.4.6.5		OHP 2.4.6.5.3	OHP 2.4.6.5		OHP 2.4.6.5.3	OHP 2.4.6.5		OHP 2.4.6.5.3	OHP 2.4.6.5

Nos.	Item to be surveyed	Survey of a ship											
		Annual	Intermediate	Special	Annual	Intermediate	Special	Annual	Intermediate	Special	Annual	Intermediate	Special
		Age* ≤ 5 years			5 < Age* ≤ 10 years			10 < Age* ≤ 15 years			Age* > 15 years		
1	2	3	4	5	6	7	8	9	10	11	12	13	14
6.13	Bottom and side valves, as well as valves installed on watertight bulkheads, their branches and sleeves:												
	.1 below waterline	P	P	OP	P	OP	OHP 2.4.6.4	P	OP 2.4.6.4.3	OHP 2.4.6.4	P	OP 2.4.6.4.3	OHP 2.4.6.4
	.2 above waterline	P	P	OP	P	P	OHP 2.4.6.4	P	P	OHP 2.4.6.4	P	P	OHP 2.4.6.4
	.3 remote control	P	P	P	P	P	P	P	P	P	P	P	P
	.4 branch pipes, pipelines (ducts) connecting sea chests and ice boxes	C	C	O	C	O	OHM 2.4.6.4	C	OM 2.4.6.4.3	OHM 2.4.6.4	C	OM 2.4.6.4.3	OHM 2.4.6.4
6.14	High-velocity vent devices, breathing valves of vent systems and cargo vapor discharge systems of oil tankers and combination carriers, chemical carriers and gas carriers	P	P	O	P	P	O	P	P	O	P	P	O
6.15	Flame arresters and flame-restricting valves of vent pipes in oil tankers, combination carriers, chemical carriers and gas carriers	C	C	O	C	O	O	C	O	O	C	O	O
6.16	Feed water and condensate system	P	P	OPH	P	P	OPH	P	P	OPH	P	P	OPH
6.17	Drainage pipes passing through sides, decks, bulkheads and platforms			O			O			O			O
6.18	Corrosion-resistant protection of sea-water piping	C	C	OM 2.4.6.7	C	O	OM 2.4.6.7	C	O	OM 2.4.6.7	C	O	OM 2.4.6.7
6.19	Ship hoses	C	C	OH	C	C	OH	C	C	OH	C	C	OH
7	**Electrical equipment**												
7.1	Electric propulsion plants:												
	.1 main generators, exciters, electric propulsion motors and electromagnetic clutches	P	MP	OMP	P	MP	OMP	P	MP	OMP	P	MP	OMP
	.2 switchboards	P	P	OEMP	P	P	OEMP	P	P	OEMP	P	P	OEMP
	.3 desks and panels for control and monitoring	P	P	OEMP	P	P	OEMP	P	P	OEMP	P	P	OEMP
7.2	Main and emergency sources of electrical power:												
	.1 generators	P	MP	OMP	P	MP	OMP	P	MP	OMP	P	MP	OMP
	.2 storage batteries	MP	MP	OMP	MP	MP	OMP	MP	MP	OMP	MP	MP	OMP
7.3	Converting devices feeding essential consumers	P	P	OMP	P	P	OMP	P	P	OMP	P	P	OMP
7.4	Switchboards:												
	.1 main and emergency switchboards	P	P	OEMP	P	P	OEMP	P	P	OEMP	P	P	OEMP
	.2 navigation-light switchboards	P	P	OMP	P	P	OMP	P	P	OMP	P	P	OMP
	.3 section and group distribution switchboards	P	P	OMP	P	P	OMP	P	P	OMP	P	P	OMP
	.4 switchboards, desks and panels for control, monitoring and signalling	P	P	OEMP	P	P	OEMP	P	P	OEMP	P	P	OEMP
7.5	Cabling:												
	.1 cables and wires	M	M	OM	M	M	OM	M	M	OM	M	M	OM
	.2 cable protection (additional), passage of cables through watertight and fire-proof bulkheads and decks	C	C	C	C	C	C	C	C	C	C	C	C

Nos.	Item to be surveyed	Survey of a ship											
		Annual	Intermediate	Special	Annual	Intermediate	Special	Annual	Intermediate	Special	Annual	Intermediate	Special
		Age* ≤ 5 years			5 < Age* ≤ 10 years			10 < Age* ≤ 15 years			Age* > 15 years		
1	2	3	4	5	6	7	8	9	10	11	12	13	14
7.6	Electric drives of essential arrangements and machinery, as well as their control, protective, starting and monitoring devices:												
	.1 pumps as mentioned in 4.6.1 of this Table, compressors, anchor arrangements, fans in machinery spaces and boiler blowers, boat gear, sliding doors	P	P	OMP	P	MP	OMP	P	MP	OMP	P	MP	OMP
	.2 steering gear, autopilot	P	P	OMP	P	MP	OMP	P	MP	OMP	P	MP	OMP
	.3 mooring machinery			OMP			OMP			OMP			OMP
	.4 towing winch	P	P	OMP	P	P	OMP	P	P	OMP	P	P	OMP
	.5 launching appliances of boats and rafts	P	P	OMP	P	MP	OMP	P	MP	OMP	P	MP	OMP
	.6 compressors, pumps, ventilators of classed refrigerating plants	P	P	OMP	P	MP	OMP	P	MP	OMP	P	MP	OMP
7.7	Lighting:												
	.1 compartments and spaces important for propulsion and safety of ship and habitability and evacuation of persons	C	C	OP	C	C	OP	C	C	OP	C	C	OP
	.2 other compartments			OP			OP			OP			OP
	.3 emergency lighting	P	P	OP	P	P	OP	P	P	OP	P	P	OP
7.8	Electrical heating and cooking appliances and devices:												
	.1 electrical heating appliances for machinery installations	P	P	P	P	P	P	P	P	P	P	P	P
	.2 other stationary heating and cooking appliances			C			C			C			C
7.9	Electrical equipment and cables in dangerous spaces and zones	OM	OM	OM	OM	OM	OM	OM	OM	OM	OM	OM	OM
7.10	Signalling and intercommunication system:												
	.1 electric engine telegraphs, rudder angle indicators and CPP position indicators	P	P	OP	P	P	OP	P	P	OP	P	P	OP
	.2 service telephone communication	P	P	OP	P	P	OP	P	P	OP	P	P	OP
	.3 general alarm system	P	P	OP	P	P	OP	P	P	OP	P	P	OP
	.4 fire detection and fire alarm system (refer to 2.4.7.11.4 of this Part)	P	P	OMP	P	P	OMP	P	P	OMP	P	P	OMP
	.5 indication of closure of watertight and fire doors	P	P	OP	P	P	OP	P	P	OP	P	P	OP
	.6 alarm of ultimate concentration of explosive gases	P	P	OP	P	P	OP	P	P	OP	P	P	OP
	.7 cargo hold water level alarm system on bulk carriers	P	P	OP	P	P	OP	P	P	OP	P	P	OP
	.8 personnel alarm	P	P	OP	P	P	OP	P	P	OP	P	P	OP
	.9 release indication of fixed local application fire-fighting system	P	P	OP	P	P	OP	P	P	OP	P	P	OP
7.11	Protective devices:												
	.1 lightning arresters			CM			CM			CM			CM
	.2 earthing	C	C	C	C	C	C	C	C	C	C	C	C
7.12	Spare parts	C	C	C	C	C	C	C	C	C	C	C	C
7.13	Instrumentation	E	E	E	E	E	E	E	E	E	E	E	E
7.14	Navigation lights and flashing lights	P	P	OP	P	P	OP	P	P	OP	P	P	OP
8	**Automation equipment**	Refer to 2.4.8.1.1, 2.4.8.1.9 and 2.4.8.1.10 of this Part											
8.1	Integrated automation systems of ships, machinery installations	MP	MP	OMP	MP	MP	OMP	MP	MP	OMP	MP	MP	OMP

Nos.	Item to be surveyed	Survey of a ship											
		Annual	Intermediate	Special	Annual	Intermediate	Special	Annual	Intermediate	Special	Annual	Intermediate	Special
		Age* ≤ 5 years			5 < Age* ≤ 10 years			10 < Age* ≤ 15 years			Age* > 15 years		
1	2	3	4	5	6	7	8	9	10	11	12	13	14
8.2	Centralized automatic alarm and monitoring systems	MP	MP	OMP	MP	MP	OMP	MP	MP	OMP	MP	MP	OMP
8.3	Automation systems (remote control, remote automated control) of:	MP	MP	OMP	MP	MP	OMP	MP	MP	OMP	MP	MP	OMP
	.1 main engines and CPP	MP	MP	OMP	MP	MP	OMP	MP	MP	OMP	MP	MP	OMP
	.2 electric generating plant (with systems of synchronization and load distribution)	MP	MP	OMP	MP	MP	OMP	MP	MP	OMP	MP	MP	OMP
	.3 diesel-generators, turbo-generators and shaft generators	MP	MP	OMP	MP	MP	OMP	MP	MP	OMP	MP	MP	OMP
	.4 main boilers	MP	MP	OMP	MP	MP	OMP	MP	MP	OMP	MP	MP	OMP
	.5 auxiliary and waste-heat boilers	MP	MP	OMP	MP	MP	OMP	MP	MP	OMP	MP	MP	OMP
	.6 compressors	MP	MP	OMP	MP	MP	OMP	MP	MP	OMP	MP	MP	OMP
	.7 separators, filters	MP	MP	OMP	MP	MP	OMP	MP	MP	OMP	MP	MP	OMP
8.4	Automation equipment of ship service systems:												
	.1 ballast system	MP	MP	OMP	MP	MP	OMP	MP	MP	OMP	MP	MP	OMP
	.2 bilge system	MP	MP	OMP	MP	MP	OMP	MP	MP	OMP	MP	MP	OMP
	.3 heel and trim systems	MP	MP	OMP	MP	MP	OMP	MP	MP	OMP	MP	MP	OMP
	.4 fuel transfer system	MP	MP	OMP	MP	MP	OMP	MP	MP	OMP	MP	MP	OMP
	.5 fire extinguishing system	MP	MP	OMP	MP	MP	OMP	MP	MP	OMP	MP	MP	OMP
	.6 ship ventilation system	MP	MP	OMP	MP	MP	OMP	MP	MP	OMP	MP	MP	OMP
8.5	Automation systems of deck machinery and cargo systems in oil tankers	MP	MP	OMP	MP	MP	OMP	MP	MP	OMP	MP	MP	OMP
8.6	Systems of control (of combustion, levels, temperature, pressure, viscosity, etc.), monitoring, protection and signalling incorporated in the systems listed above	MP	MP	OMP	MP	MP	OMP	MP	MP	OMP	MP	MP	OMP

Nos.	Item to be surveyed	Survey of a ship											
		Annual	Intermediate	Special	Annual	Intermediate	Special	Annual	Intermediate	Special	Annual	Intermediate	Special
		Age* ≤ 5 years			5 < Age* ≤ 10 years			10 < Age* ≤ 15 years			Age* > 15 years		
1	2	3	4	5	6	7	8	9	10	11	12	13	14
8.7	Automation devices:												
	.1 regulators of level, pressure, temperature, viscosity, etc.	P	P	OP	P	P	OP	P	P	OP	P	P	OP
	.2 level, pressure (differential pressure), temperature, flow, salinity, vibration, oil mist, rotor- axial displacement transducers and sensors, etc.	P	P	OP	P	P	OP	P	P	OP	P	P	OP
	.3 control, monitoring and alarm boards and panels	MP	MP	OMP	MP	MP	OMP	MP	MP	OMP	MP	MP	OMP
	.4 remote control measuring instruments	E	E	EM	E	E	EM	E	E	EM	E	E	EM
8.8	Dynamic positioning systems (DP-systems)	MP	MP	OMP	MP	MP	OMP	MP	MP	OMP	MP	MP	OMP

* When assigning the next five-year period of the ship's surveys on the basis of the provisions of 2.4.1.4.6 of this Part, the provisions of 2.1 of Part I "General Provisions" (definition "Special/exceptional circumstances") and 2.4.1.4.8 of this Part shall be met.
When assigning the next five-year period from the actual date of special survey (SS) completion that exceeds the anniversary date of build of the ship, the scope of current SS shall correspond to the scope of SS prescribed by these Rules depending on the actual age of the ship calculated from the date of build of the ship.
Example: An oil tanker, the date of build: 1 September 2007, is submitted to the 2nd special survey. The due date of special survey completion is 1 September 2017. On the date of special survey the ship reaches 10 years of age. When assigning the next five-year period from the special survey due date, the scope of current SS will comply with the requirements of these Rules subject to the age and type of the ship (i.e. as for the 2nd SS of the ship of less than or equal to 10 years of age). If according to 2.4.1.4.6 it was agreed to assign the next five-year period from the actual date of special survey completion, then after1 September 2017, i.e. after the anniversary date of build, the scope of current SS shall correspond to the scope of SS prescribed by these Rules for an oil tanker over 10 years of age. Thus, the 2nd SS shall be carried out in the scope of the 3rd SS (i.e. as for ships between 10 and 15 years of age).
** Applicable to ships constructed before 1 January 2017 — as indicated in the ship specification. For ships constructed on or after 1 January 2017, the requirements for spare parts are of a recommendatory nature.

Table 2.1.1-2

SCOPE OF PERIODICAL SURVEYS
Part 2. Items of survey within the scope of application of the Rules for the Equipment of Sea-Going Ships

Instructions on survey of life-saving appliances and arrangements, signal means, radio equipment and navigational equipment are given in 4.1.1 — 4.1.4, Part III "Survey of Ships in Compliance with International Conventions, Codes, Resolutions and Rules for the Equipment of Sea-Going Ships" of the Guidelines.

Symbols:
O — examination with access, opening-up or dismantling being provided where necessary;
C — external examination;
M — measurements of wears, clearances, insulation resistance, etc.;
H — proof load tests;
P — operational testing of machinery, equipment and arrangements, external examination included;
E — verification of documentation confirming carrying out of mandatory periodical checks/tests by the recognized service supplier.

Nos.	Item to be surveyed	Survey of a ship		
		Annual	Intermediate (2nd or 3rd annual)	Special
1	2	3	4	5
1 Life-saving appliances and arrangements				
1.1	Launching appliances of lifeboats, rescue boats, liferafts including:	OPE[1]	OPE[1]	OPE[1]
	.1 seatings, stools, derricks and other metal structures	O	OM[2]	OM[2]
	.2 winches (including brakes), drives and other mechanisms	OPE[1, 3]	OPE[1, 3]	OMPHE[1, 3]
	.3 pulleys, blocks, swivels, suspensions and other interchangeable components	CP	CP	OMP
	.4 falls, strops	C	C	C
	.5 automatic safety devices	CP	CP	CP
	.6 means for hanging-off the lifeboat to free the release mechanism	C	C	CP
1.2	Lifeboats and rescue boats, including:	OPE[1]	OPE[1]	OPE[1]
	.1 hull, rigid enclosures, canopies, hatchway hatch, bilge keels, keel handholds, buoyant lifeline	O	O	O
	.2 release gears	OPE[1]	OPE[1]	OPHE[1]
	.3 engines with starting systems and engine-suspended accessories, boats mechanical drives, propellers	P	P	P
	.4 steering gear	P	P	P
	.5 drain valves	C	C	C
	.6 skates and fenders	C	C	C
	.7 painter securing device	C	C	C
	.8 exterior and interior lights			
	.9 items of equipment	C	C	C
	.10 drenching system	CP	CP	CP
	.11 compressed air system	CP	CP	CP
	.12 exterior marking	C	C	C
1.3	Rigid liferafts and buoyant apparatus	O[1]	O[1]	O[1]
1.4	Inflatable liferafts, marine evacuation systems, inflated rescue boats, hydrostatic release units, inflatable life jackets, immersion suits, anti-exposure suits and thermal protective aids	CE[1,·4]	CE[1,·4]	CE[1,·4]
1.5	Lifebuoys and rigid lifejackets	C	C	CE[4]
1.6	Line-throwing appliances	C	C	C
1.7	Embarkation ladders	C	C	C
1.8	Posters or signs using symbols	C	C	C

Nos.	Item to be surveyed	Survey of a ship		
		Annual	Intermediate (2nd or 3rd annual)	Special
1	2	3	4	5
	2 Signal means			
2.1	Navigation and flashing lights	P	P	OP
2.1.1	Spare parts for navigation and flashing lights	—	—	C
2.2	Sound signal means	P	P	P
2.3	Signal shapes and pyrotechnic signal means	C	C	C
	3 Navigational equipment			
3.1	Standard magnetic compass	P	P	EP
3.2	Spare magnetic compass	P	P	P
3.3	Gyrocompass	P	P	P
3.4	Ship's heading or track control system	P	P	P
3.5	Transmitting heading device (THD)	P	P	P
3.6	Electronic chart display and information system (ECDIS)	P	P	P
3.7	Back-up arrangements for ECDIS	P	P	P
3.8	Receiver for a global navigation satellite system(s)/terrestrial radio navigation system	P	P	P
3.9	Radar	P	P	P
3.10	Electronic plotting aid (EPA)	P	P	P
3.11	Automatic tracking aid (ATA)	P	P	P
3.12	Automatic radar plotting aid (ARPA)	P	P	P
3.13	Automatic identification system (AIS)	EP	EP	EP
3.14	Voyage data recorder (VDR / S-VDR)	EC	EC	EC
3.15	Speed and distance measuring device through the water (log) and speed and distance measuring device over the ground (absolute log)	P	P	OP
3.16	Mechanical log	C	C	C
3.17	Echo sounder	P	P	OP
3.18	Sound reception system	P	P	P
3.19	Radar reflector	C	C	P
3.20	Radiobeacon station	P	P	P
3.21	Navigational devices and instruments	C	C	C
3.22	Spaces intended for installation of navigational equipment	C	C	C
3.23	Sources of electrical power	P	P	OMP
3.24	Aerials	P	P	OP
3.25	Earthing	C	C	C
3.26	Spare parts, measuring instruments, tools and materials	C	C	CE
3.27	Equipment of long range identification and tracking system (LRIT system)	P	P	P
3.28	Bridge navigational watch alarm system (BNWAS)	P	P	P
3.29	Rate-of-turn indicator	P	P	P
3.30	Indicators of: **.1** rudder angle **.2** propeller revolutions, the force and direction of thrust **.3** pitch and operational mode of controllable pitch propeller(s) **.4** force and direction of lateral thrust of the thruster(s)	P	P	P
	4 Radio equipment			
4.1	Spaces where shipboard radio communication facilities are installed	C	C	C
4.2	Spaces where survival craft radio communication facilities are located	C	C	C
4.3	VHF radio installation:			
	.1 DSC encoder	P	P	OMP
	.2 DSC watch receiver	P	P	OMP
	.3 radiotelephone station	MP	MP	OMP

Nos.	Item to be surveyed	Survey of a ship		
		Annual	Intermediate (2nd or 3rd annual)	Special
1	2	3	4	5
4.4	MF radio installation:			
	.1 DSC encoder	P	P	OMP
	.2 DSC watch receiver	P	P	OMP
	.3 radiotelephone station	MP	MP	OMP
4.5	MF/HF radio installation:			
	.1 DSC encoder	P	P	OMP
	.2 DSC watch receiver	P	P	OMP
	.3 telephony and narrow-band direct-printing (NBDP) receiver	P	P	OMP
	.4 telephony, DSC and NBDP transmitter	MP	MP	OMP
	.5 direct-printing apparatus of improved fidelity	P	P	OP
	.6 terminal printing device	P	P	OP
4.6	INMARSAT ship earth station	P	P	OMP
4.7	NAVTEX service receiver	P	P	OMP
4.8	enhanced group calling (EGC) receiver	P	P	OMP
4.9	HF direct-printing telegraphy receiver for reception of marine safety information	P	P	OMP
4.10	COSPAS-SARSAT satellite EPIRB	EP	EP	EP
4.11	VHF EPIRB	EP	EP	EP
4.12	Ship's and survival craft search and rescue locating device: ship's and survival craft radar search and rescue transponder (SART) or ship's and survival craft AIS search and rescue transmitter (AIS-SART)	P	P	P
4.13	Two-way VHF radiotelephone apparatus[5]	P	P	P
4.14	Fixed two-way VHF radiotelephone apparatus[5]	P	P	OMP
4.15	Main, operational and portable VHF radiotelephone station operating within frequency band of 300,025 to 300,500 MHz and 336,025 to 336,500 MHz	P	P	P
4.16	Two-way VHF radiotelephone apparatus for communication with aircraft	P	P	P
4.17	Ship security alert system	P	P	P
4.18	Equipment of public address system (including spaces, sources of energy, earthing and spare parts)	P	P	OMP
4.19	Facsimile receiving device	P	P	P
4.20	Sources of electrical power:	P	P	
	.1 converters	P	P	OMP
	.2 accumulator batteries	EP	EP	EP
	.3 charging devices (including automatic ones)	P	P	OMP
	.4 cabling	C	C	OM
	.5 switchboards and fittings	P	P	OP
	.6 devices for protection against radio interference	C	C	O
4.21	Aerials	MP	MP	OMP
4.22	Lead-in and interior wring of aerials	C	C	O
4.23	Earthing	C	C	OM
4.24	Spare parts, portable measuring instruments	C	C	CP

Nos.	Item to be surveyed	Survey of a ship		
		Annual	Intermediate (2nd or 3rd annual)	Special
1	2	3	4	5

[1] During survey and determination of technical condition of life-saving appliances, examinations and tests specified in 4.1.1.2.7 — 4.1.1.2.14, 4.1.1.2.18 and 4.1.1.2.20 of Part III "Survey of Ships in Compliance with International Conventions, Codes, Resolutions and Rules for the Equipment of Sea-Going Ships" of the Guidelines shall be applied.

[2] During thickness measurements, provisions of Annex 2-6 of Annex 2 to these Rules shall be considered.

[3] For survey scope of mechanisms and electric drives of launching appliances of lifeboats, rescue boats and liferafts — refer to 4.6.7 and 7.6.5 of Table 2.1.1-1 accordingly.

[4] Verification of documentation to confirm performance of periodical surveys and tests at the survival craft stations as well as at other recognized by the Register specialized locations for survey, testing and repair of life-saving appliances.

[5] Operability of the two-way VHF radiotelephone apparatus shall be checked using a battery not intended for the use in the event of a distress situation.

2.2 ANNUAL SURVEY

2.2.1 General.

2.2.1.1 Annual survey for class confirmation is intended for establishing that the ship complies to a sufficient degree with the conditions of class, as well as for checking the operation of machinery, devices and installations covered by the requirements of the Rules for Construction.

2.2.1.2 At annual surveys of a ship, its hull, arrangements, equipment and outfit, machinery installation, fire protection, systems and piping, electrical and automation equipment as well as, where applicable, life-saving appliances and arrangements, signal means, radio equipment and navigational equipment are checked with regard to any changes in the list, completeness, design, arrangement and installation of items of technical supervision, as well as in their technical condition.

2.2.1.3 At annual survey, it is checked that the ship continues to comply with the stability and subdivision conditions as stated in the appropriate Stability Booklet and Damage Stability Booklet approved by the Register.

2.2.1.4 Annual surveys shall be carried out between special surveys (or between initial and special survey) within three months before or after each anniversary date of the Classification Certificate.

If an annual or intermediate survey is completed before the beginning of a specified survey window (early survey), a new anniversary date shall be stated in the Classification Certificate, and the subsequent annual or intermediate surveys shall be completed at the intervals prescribed by these Rules using the new anniversary date. A new anniversary date shall be fixed not later than 3 months after the survey completion date, and a new survey window shall be prescribed (±3 months), respectively. Thus, the validity date of the Classification Certificate may be changed accordingly, namely, the completion of annual or intermediate survey before the beginning of a specified survey window (early survey) may lead to the reduction of current Classification Certificate validity period.

The expiry date of the Classification Certificate may remain unchanged provided one or more annual or intermediate surveys, as appropriate, are carried out so that the maximum intervals between the surveys prescribed by the relevant requirements of these Rules are not exceeded.

2.2.1.5 Annual survey of a ship consists mainly of an external examination of items and their operational testing.

Summarized scope of surveys is given in Tables 2.1.1-1 and 2.1.1-2, and in the relevant chapters of this Section.

2.2.1.6 Annual surveys shall, as far as practicable, be carried out simultaneously with surveys of the outside of the ship's bottom stipulated by the Rules (refer to 2.5), as well as with the surveys carried out for renewal and endorsement of the relevant statutory certificates. It is recommended that the surveys carried out on the Continuous Survey System (CSS) basis shall be concurrently with annual surveys.

2.2.1.7 Prior to commencement of survey, it shall be ascertained that the shipowner has prepared the ship for survey and provided the necessary facilities for a quality and safe execution of surveys and testing of items (refer to Section 4 of Part I "General Provisions").

2.2.1.8 For ships covered by requirements of the international conventions and codes (SOLAS 74/78, International Convention on Load Lines, etc.), some requirements for survey of the items of technical supervision apply both to classification and statutory requirements. Thus, at least the following requirements mentioned in IMO resolution A.1140(31) apply both to classification and statutory requirements (information on the requirements for survey in compliance with the IMO resolution is available at http://idocs.rs-class.org, as well as in the program STORM regarding drawing-up of the Survey Checklist):

1) Annual survey

1.1) Load line — 1.2.2.1 — 1.2.2.15, Annex 2 (refer to 2.3, Part III "Survey of Ships in Compliance with International Conventions, Codes, Resolutions and Rules for the Equipment of Sea-Going Ships" of the Guidelines).

1.2) Hull — 2.2.2.1 — 2.2.2.8.1, 2.2.2.31 — 2.2.2.38 (except for 2.2.2.32, 2.2.2.36 and 2.2.2.37), Annex 1.

1.3) Machinery installation, machinery, and electrical installation and equipment — 2.2.2.9 — 2.2.2.30 (except for 2.2.2.19 and 2.2.2.29), Annex 1.

1.4) Fire-fighting equipment and fire protection — 1.2.2.1 — 1.2.2.17, Annex 1 (1.2.2.16 is applicable for fire protection).

1.5) Additional requirements for oil tankers — 1.2.3.1 — 1.2.3.9 (except for 1.2.3.8), 2.2.3.1 — 2.2.3.18, Annex 1.

1.6) Additional requirements for chemical tankers — 2.2.4.1, Annex 1 and 1.2.2.1 — 1.2.2.20 and 1.2.2.22, Annex 5.

1.7) Additional requirements for gas carriers — 2.2.4.1, Annex 1 and 2.2.2.1 — 2.2.2.31 (except for 2.2.2.27), Annex 5.

2) Intermediate survey

In addition to annual survey, the following requirements shall be met:

2.1) Ballast tanks and cargo spaces — 2.3.2.2 — 2.3.2.4, Annex 1.

2.2) Additional requirements for oil tankers — 2.3.3.2 — 2.3.3.3, Annex 1.

2.3) Additional requirements for chemical tankers — 1.3.2.2 — 1.3.2.4, Annex 5.

2.4) Additional requirements for gas carriers — 2.3.2.2 — 2.3.2.6 (except for 2.3.2.5), Annex 5.

2.2.2 Hull.

2.2.2.1 At annual survey the following items shall be examined:

open decks, above-water part of shell plating;

ballast tanks according to the requirements of 2.2.2.3.2;

superstructures, deckhouses, machinery and boiler casings;

coamings of cargo and companion hatches, companionways, ventilators and air pipes;

hatch covers of freeboard decks and superstructures, including cargo hatch covers;

funnel casings;

skylights, flush deck, side and non-opening scuttles, companion ladders;

closures of openings in outer contour;

deck and bulkhead penetrations in watertight structures;

scuppers and other drainage holes;

gangways and underdeck passages;

guard rails and bulwarks;

shell, bow, side and stern doors of ro-ro ships;

cargo securing devices;

devices to ensure the watertightness of hatch covers and other closures of openings in outer contour;

cargo spaces of dry cargo ships;

structures of main and auxiliary machinery spaces, refrigerating machinery spaces and boiler spaces;

coal bunkers;
propeller-shaft tunnels;
all air pipes and ventilator pipes on the exposed deck.

Survey of fore air pipes and ventilator pipes (IACS UR S27) shall be carried out in accordance with 2.4.2.8.

2.2.2.2 On ro-ro ships, including passenger ships, the closures in hull, superstructures and deckhouses, in the upper and promenade decks, fire doors, doors in watertight bulkheads, ramps, ports and other hull closures are examined and operationally tested together with their drives and relevant signalling systems. Additional requirements for passenger ships and passenger ro-ro ships are given in Section 9 of Part III "Additional Surveys of Ships Depending on their Purpose and Hull Material".

2.2.2.3 Survey of suspect areas and ballast tanks.

2.2.2.3.1 Suspect areas.

Suspect areas identified during survey, including at previous ones, shall be examined. Thickness measurements shall be taken of the areas of substantial corrosion. The extent of thickness measurements shall be increased to determine areas of substantial corrosion. Table 2.4.2.6.2-2 may be used as guidance for these additional thickness measurements. These extended thickness measurements shall be carried out before the annual survey is credited as completed.

N o t e . These requirements are not applicable to cargo tanks of all oil tankers (single skin and double skin) and chemical tankers surveyed in accordance with Sections 2 — 4 of Part III "Additional Surveys of Ships Depending on their Purpose and Hull Material".

2.2.2.3.2 Survey of ballast tanks.

Survey of ballast tanks when required as a consequence of the results of the special survey (refer to 2.4.2) and intermediate survey (refer to 2.3.2) shall be carried out. When considered necessary by the surveyor, or where extensive corrosion exists, thickness measurement shall be carried out. If the results of these thickness measurements indicate that substantial corrosion is found, then the extent of thickness measurements shall be increased to determine areas of substantial corrosion. Table 2.4.2.6.2-2 may be used as guidance for these additional measurements. These extended thickness measurements shall be carried out before the annual survey is credited as completed.

When soft or semihard coating is applied to surfaces of ballast tanks, the ballast tanks shall be surveyed at annual intervals.

The surveyor shall be provided with documentation confirming that prior to application of the semihard coating, thickness measurements and structural repairs, if so required as a consequence of the results of thickness measurements, have been carried out, and that surface preparation, coating application and film thickness comply with the manufacturer's specification.

2.2.2.4 Thickness measurements of structures in areas subject to close-up surveys shall be carried out simultaneously with the close-up surveys.

2.2.2.5 Loading instrument, stability instrument.

2.2.2.5.1 Loading instrument and stability instrument shall be subject to annual inspection. Verification of the instrument (software) satisfactory condition shall be carried out on board the ship in the presence of the RS surveyor, the results obtained shall be recorded in the Survey Checklist (form 6.1.01), and in justified cases, in the Report on Survey of the Ship (form 6.3.10). Availability of the user manual and the Report (form 6.3.29) with approved test loading conditions shall be checked. It shall be verified that the Stability Booklet, Loading Manual and Damage Stability Booklet, which served as the basis for checking the software operation, and which are indicated in the Report (form 6.3.29), have not been updated since the date of issuance of the above Report, and that the data obtained

using the instrument are identical to those stated in the RS-approved test loading conditions attached to the Report. The software shall be tested on all computers intended for it (those which are type approved or specially designed for the software).

2.2.2.5.2 The instrument(s) shall be operationally tested by input and calculation of at least one loading condition (except for the lightship condition) and comparison of the results obtained with the approved test loading conditions.

2.2.2.5.3 If the numerical output from the instrument(s) is at variance with the approved test loading conditions, the possibility of class renewal/retainment shall be decided by RHO in each particular case based on review of the information submitted by the RS surveyor carrying out the survey. Without the RHO resolution, the survey cannot be considered as completed.

2.2.2.5.4 If a ship in service has been subjected to unauthorized modifications concerning general arrangement, lightship weight, loading conditions, an entry: "Invalid" shall be made in the Report (form 6.3.29) which shall be duly signed and stamped by the RS surveyor. In this case, the Classification Certificate becomes invalid and the ship class is automatically suspended. The software for the new parameters of the ship shall be subjected to the repeated approval procedure according to Section 12 of Part II "Technical Documentation" of RTSCS.

2.2.2.6 Repairs.

2.2.2.6.1 Any damage in association with wastage over the allowable limits (including buckling, grooving, detachment or fracture) or extensive areas of wastage over the allowable limits, which affects or, in the opinion of the surveyor, will affect the ship's structural, watertight or weathertight integrity, shall be promptly and thoroughly repaired (for details refer to 5.13, Part I "General Provisions").

2.2.2.7 Survey of the outside of the ship's bottom.

Survey of the outside of the ship's bottom of the following ships shall be subject to annual survey in accordance with 2.5.4:

passenger ships;

dynamically supported craft and high-speed craft;

wooden or composite ships;

ships in NAABSA regime.

2.2.2.8 The assessment of the hull technical condition shall be carried out in accordance with Section 5, Part I "General Provisions".

2.2.3 Ship's arrangements, equipment and outfit.

2.2.3.1 Rudder and steering gear.

2.2.3.1.1 Rudder and steering gear examination includes an operational testing of the main and auxiliary steering gear together with the control system and stations, as well as with rudder indicators, underway or when lying.

2.2.3.1.2 Emergency steering gear and rudder stops are examined and operationally tested.

2.2.3.1.3 Machinery, systems and electrical equipment forming part of rudder and steering gear are surveyed in accordance with the requirements to be found in the relevant parts of these Rules.

2.2.3.1.4 In determining the technical condition of rudder and steering gear, the wear and defect rates given in 2.4.3.3.5 shall be taken into account.

2.2.3.2 Anchor arrangement.

2.2.3.2.1 Anchor arrangement is examined and operationally tested through dropping or lowering and hoisting of anchors.

2.2.3.2.2 Anchors, hawse pipes, swivels, stoppers, ropes and chains shall be examined externally.

2.2.3.2.3 Machinery, systems and electrical equipment forming part of the anchor arrangement are surveyed in accordance with the requirements to be found in the relevant parts of these Rules.

2.2.3.2.4 In determining the technical condition of the anchor arrangement, the wear and defect rates given in Annex 50 to the Guidelines shall be taken into account.

2.2.3.3 Mooring arrangement.

2.2.3.3.1 Bollards, hawse pipes, reels, fairleads and ropes shall be examined externally. Mooring winches shall be operationally tested.

2.2.3.3.2 In determining the technical condition of the mooring arrangement, the wear and defect rates given in 2.4.3.5.3 shall be taken into account.

2.2.3.4 Towing arrangement.

2.2.3.4.1 Tow lines, towing equipment (including bollards, towing bitts, fairleads, chocks, stoppers and associated supporting structures) are subject to external examination.

2.2.3.4.2 Marking of shipboard fittings for towing with the value of the safe towing load (*TOW*) and, in applicable cases, the safe working load (*SWL*) shall be checked.

2.2.3.4.3 Special arrangement for tugs.

On tugs, in addition to that in 2.2.3.4.1 and 2.2.3.4.2, towing rails, towing arches, rope stoppers and the fastenings for securing these parts to the hull are examined. Tow hooks are subject to thorough examination. Towing winches and their equipment shall be examined and operationally tested.

2.2.3.4.4 Towing winch emergency release systems.

2.2.3.4.4.1 These requirements apply to survey of towing winch emergency release systems installed on tugs in accordance with the requirements of 6.6, Part IX "Machinery" of the Rules for the Classification and Construction of Sea-Going Ships.

2.2.3.4.4.2 Examinations and inspections of towing winch emergency release system shall be carried out in accordance with the documented instructions for annual surveys provided by the manufacturer and agreed by the Register. Availability of the instructions on board the ship as well as documentation containing performance capabilities and operating instructions of the system shall be verified prior to the commencement of the survey.

2.2.3.4.4.3 Towing winch emergency release system shall be examined and operationally tested under no load condition in order to confirm its operability and satisfactory technical condition. Where practical, activation of the emergency release system may be confirmed by observation of the winch brake.

2.2.3.4.4.4 The function of alarm system associated with the emergency release system shall be verified as far as practicable and reasonable.

2.2.3.4.4.5 The means of emergency release of the tow line in the event of a blackout shall be functionally tested. Where alternative sources of energy are arranged for this purpose, the sources of energy shall be visually inspected and operationally tested.

2.2.3.4.5 Special emergency towing arrangement for oil tankers, oil tankers (> 60 °C), combination carriers, gas carriers and chemical tankers.

Special emergency towing arrangement for the above types of ships of 20000 t deadweight and above, consisting of pick-up gear, towing pennants, chafing gear, fairleads, strongpoints, roller pedestal, is subject to external examination to make sure that it is ready for use.

2.2.3.4.6 In determining the technical condition of the towing arrangement, the wear and defect rates given in 2.4.3.6.6 shall be taken into account.

2.2.3.5 Closing appliances for openings in shell plating, decks, superstructures and bulkheads.

2.2.3.5.1 Closing appliances of hatches and manholes shall be examined on open deck areas and inside superstructures, which are not enclosed, as well as external doors of superstructures and deckhouses, companion hatches, skylights and ventilating trunks, bow, side and stern doors and scuttles, ventilator covers, watertight bulkhead doors. Hatch covers, their coamings, stiffening structures and packing facilities shall be surveyed aboard all ships as part of annual surveys.

Tightness tests of cargo hold hatch covers shall be conducted at each annual survey on ships over 20 years of age, as well as where the tightness is questioned.

2.2.3.5.2 Doors in watertight bulkheads and their drives with indicators, as well as hatch cover drives shall be operationally tested. Sliding doors shall be additionally tested with a feeler gauge. The feeler gauge of 0,05 mm in length shall not penetrate through the entire perimeter of sealing.

2.2.3.5.3 Survey of small hatches on the fore deck of the ship (IACS UR S26) shall be carried out in accordance with 2.4.3.2.9.

2.2.3.5.4 Machinery, systems and electrical equipment forming part of mechanical drives of hatch covers and bulkhead doors shall be surveyed in accordance with the requirements to be found in the relevant parts of these Rules.

2.2.3.6 Cargo securing devices.

2.2.3.6.1 Cargo securing devices shall be examined, including container securing equipment aboard container ships and ships adapted for container carriage. For this purpose it shall be checked whether the equipment is complete, whether there are any external defects or excessive wear, and whether marking and relevant certificates are available.

2.2.3.6.2 Assignment/retainment of descriptive notation **Container ship** or distinguishing mark CONT (the mark for ships fitted for possible carriage of the international standard containers but having no descriptive notation **Container ship** in the class notation) is possible only on satisfactory completion of the survey of appropriate cargo securing devices.

2.2.3.7 Examination of weather decks, ship side plating above waterline, hatch covers and coamings.

2.2.3.7.1 Confirmation shall be obtained that no unapproved changes have been made to the hatch covers, hatch coamings and their securing and sealing devices since the last survey.

2.2.3.7.2 Mechanically operated steel covers shall be checked, in particular:

.1 hatch covers, including close-up survey of plating;

.2 tightness devices of longitudinal, transverse and intermediate cross junctions (gaskets, gasket lips, compression bars, drainage channels);

.3 clamping devices, retaining bars, cleating;

.4 chain and rope pulleys;

.5 guides;

.6 guide rails and track wheels;

.7 stoppers, etc.;

.8 wires, chains, gypsies, tensioning devices;

.9 hydraulic system essential to closing and securing;

.10 safety locks and retaining devices.

2.2.3.7.3 Portable covers, wooden or steel pontoons shall be checked, where applicable, in particular:

.1 wooden covers and portable beams, carriers or sockets for the portable beam, and their securing devices;

.2 steel pontoons·

.3 tarpaulins;

.4 cleats, battens and wedges;

.5 hatch securing bars and their securing devices;

.6 loading pads/bars and side plate edge;

.7 guide plates and chocks;

.8 compression bars, drainage channels and drain pipes.

2.2.3.7.4 The condition of hatch coaming plating and their stiffeners shall be checked.

2.2.3.7.5 Random checking of the satisfactory operation of mechanically operated hatch covers shall be made, including:

.1 stowage and securing in open condition;

.2 proper fit and efficiency of sealing in closed condition;

.3 operational testing of hydraulic and power components, wires, chains and link drives.

2.2.3.7.6 Weld connections between all air pipes and deck plating shall be examined.

2.2.3.7.7 All air pipes installed on the exposed decks shall be examined externally.

2.2.3.7.8 Flame screens on vents to all fuel oil and lube oil tanks shall be examined.

2.2.3.7.9 Ventilator heads, including automatic, located on open decks and their closures shall be externally examined and their marking ("open — closed") shall be checked.

2.2.4 Fire protection.

2.2.4.1 Fire bulkheads and decks shall be examined, as well as closing appliances of openings therein, fire doors, closing appliances of external openings (ventilation ducts, annular spaces of stacks, skylights). The remote control systems of fire doors shall be operationally tested.

2.2.4.2 Fire extinguishing systems are examined and operationally tested complete with cylinders, tanks, arrangements, equipment and outfit.

The piping of carbon dioxide smothering systems, fire extinguishing using freons, foam fire extinguishing systems shall be air-tested for free passage of the medium transferred.

The aerosol fire extinguishing systems shall be checked by means of visual examination of the working order through indication on the remote control device and the efficiency of fastening of the system equipment and cables.

The operational testing of fire extinguishing systems shall be carried out concurrently with that of the pumps, compressors, ventilators, boilers, apparatuses and pressure vessels, by which they are served, along with testing of their systems, connecting devices, remote control drives, automation systems and devices, monitoring devices.

The visual and audible alarms warning about the fire extinguishing system starting shall be operationally tested.

All cylinders for the storage of fire extinguishing medium shall be surveyed, and a check for completeness and external examination shall be carried out in respect of fire-fighting outfit, including emergency escape breathing devices (their expiry date shall be checked), spares and tools.

At survey of cabinets for fire hoses, they shall be checked for structural integrity, drainage and corrosion.

2.2.4.3 For the purpose of survey of fire smothering systems, it shall be checked whether the volume of fire extinguishing medium is sufficient, whether the cylinders bear the stamps of competent organizations, as well as whether the certificates from a recognized laboratory confirming suitability of fire extinguishing medium for the use are available.

2.2.4.4 Fire alarm systems shall be operationally tested.

2.2.4.5 Additional instructions and recommendations on the checks and examinations of fire hoses, couplings, fire hose nozzles, foam generators and self-contained breathing apparatuses carried out at annual surveys are set out in 2.2.4, Part II "Carrying Out Classification Surveys of Ships" of the Guidelines.

2.2.5 Machinery installation.

2.2.5.1 Machinery installation, together with the machinery, systems, electrical equipment, arrangements, automation, signalling and monitoring equipment by which it is served, shall be inspected to verify whether any modifications have been introduced to the list of items of technical supervision,their design, arrangement and installation on board, equipment of machinery spaces, as well as to assess their technical condition, on the basis of the Rules for Construction.

2.2.5.2 Main and auxiliary machinery, emergency power sources and systems, by which they are served, shall be examined and operationally tested.

2.2.5.3 For the purpose of the main and auxiliary machinery operational testing, its availability for service is checked, as well as the serviceability of manoeuvring and starting devices, remote control, regulating and protection devices, machinery driven by the main engine and driving machinery, as well as of gear and couplings. It is not necessary for the machinery to achieve a specific speed, load or other parameters.

2.2.5.4 Diesel generators, pumps, turbochargers, ejectors, separators, compressors, ventilators in dangerous spaces, and boiler blowers shall be examined and operationally tested.

2.2.5.5 Speed governors and overspeed devices (only where the main machinery driving main generators or driving a propeller through a release gear, or a CPP is concerned, as well as diesel generators with power output of 220 kW and above) shall be operationally tested.

2.2.5.6 All accessible parts of the shafting and sterntube arrangement shall be subject to visual examination. The control systems of CPP and pitch control units, main AMSS as well as the cooling and lubricating system of propeller shaft bearings shall be examined and operationally tested. Additional instructions are given in 2.11.8.

2.2.5.7 Survey of ship boilers is an integral part of annual survey and shall be carried out in compliance with 2.10.

2.2.5.8 Systems and fittings, remotely driven fittings included, as well as bottom-and-side fittings, shall be examined and operationally tested.

2.2.5.9 Heat exchangers, air receivers and other pressure vessels, filters and their safety devices shall be examined and checked together with the check of the systems.

2.2.5.10 Communication systems, telegraphs, audible and visual signal devices shall be examined and operationally tested.

2.2.5.11 Survey of machinery installation/machinery may be carried out on a PMS basis in accordance with 2.7.

2.2.5.12 Survey of machinery installation/machinery may be carried out on a CM/CBM basis in accordance with 2.8.

2.2.6 Ship systems and piping.

2.2.6.1 Bilge and ballast systems shall be examined and operationally tested together with relevant fittings and machinery, as well as together with remote control, monitoring, protection and alarm systems.

2.2.6.2 When surveying air, exhaust gas, overflow and sounding pipes, which shall be performed taking into account 2.2.3.7.6 — 2.2.3.7.9, a check shall be carried out of availability and condition of shutoff valves on air pipes of ice boxes and sea chests, flame arresters on ends of exhaust gas pipes, sight glasses on overflow pipes, self-closing faucets of short sounding pipes in engine room and self-closing test cocks located below them, level indicators.

2.2.6.3 Hydraulic drive systems shall be examined and operationally tested.

2.2.6.4 The ventilation system of dangerous spaces shall be examined and operationally tested. Ships whose keels were laid on or after 1 January 2012 shall be checked for the availability of safe access to the controls for closure of ventilation ducts (refer to 12.1.10 of Part VIII "Systems and Piping" of the Rules for the Classification and Construction of Sea-Going Ships) leading to cargo, machinery and other spaces fitted with fire smothering systems.

2.2.6.5 Based on the examination results, the RS surveyor may require hydraulic tests to be carried out under a pressure equal to the maximum allowable working pressure of the hose stated in its RS certificate (refer to 4.5 of Part I "General Provisions") and marked on both ends of the hose, or equal to 1,5 of the working pressure of the system on which the hose is fitted, whichever is greater.

2.2.7 Electrical equipment.

2.2.7.1 The electric propulsion plant (main generators, exciters, electric propulsion motors and electromagnetic couplings, switch gear, control and monitoring panels) shall be examined and operationally tested.

2.2.7.2 Main and emergency electric power sources, accumulators, transformers, converters shall be examined and operationally tested.

2.2.7.3 The following switch gear shall be examined and operationally tested: main, emergency, section, distribution and navigation light switchboards, control, monitoring and signalling desks and panels.

2.2.7.4 The electric drives of devices and machinery mentioned in Table 2.1.1-1 of Part II "Survey Schedule and Scope" shall be examined and operationally tested, as well as their monitoring and protection equipment, switch and control gear.

2.2.7.5 To be examined and operationally tested is the main and emergency lighting of items and spaces essential for the safe operation of the ship, its survivability, habitability and evacuation of people.

2.2.7.6 The main and spare sets of navigation lights fitted in their regular places shall be examined and operationally tested, as well as flashing lights. Spare navigation lights fitted in regular places instead of main ones shall be examined.

2.2.7.7 To be examined and operationally tested are engine room telegraphs, rudder, CPP blade position and main AMSS angle indicators, internal service communication, general alarm system, fire detection and alarm system, alarms to warn that fire smothering system is put into action, signalling systems of closing of watertight and fireproof remotely operated doors, water ingress detection and alarm in cargo holds of bulk carriers; engineers' alarm; fire extinguishing medium release alarm, sound signals in engineers' accommodation spaces, indication of door position in ro-ro passenger ships and ro-ro cargo ships; sewage holding tanks level alarm.

Protective earthing and lightning rods shall be examined.

2.2.7.8 Cable transits through watertight and fire-resisting bulkheads and decks, as well as extra protection of cables shall be examined.

For ships contracted for construction on or after 1 July 2021 with regard to cable transits through watertight bulkheads and decks, the RS surveyor shall review the Cable Transit Seal Systems Register in order to confirm that it has been properly maintained by the shipowner (responsible personnel of the crew). Where there are records entered since the last annual survey of any repair, opening out/closing or alterations to the existing (installed) cable transits or installation of new cable transits, the satisfactory condition of their seal systems shall be confirmed by satisfactory results of review of these records and, if deemed necessary, examination of appropriate transits. The results of survey shall be recorded in the Cable Transit Seal Systems Register for each such cable transit.

2.2.7.9 The insulation resistance of cabling, as well as of electrical equipment and cable runs in dangerous spaces and areas shall be measured.

Such spaces and areas as well as classification of dangerous zones are given in 2.9, 19.2, 19.3 and 19.11 of Part XI "Electrical Equipment" of the Rules for the Classification and Construction of Sea-Going Ships. During inspections, provisions of IEC 60079-17:2013 shall be met.

Repaired or replaced electrical equipment shall be surveyed in accordance with IEC 60079-17:2013.

2.2.7.10 Electrical equipment and cables installed in dangerous spaces and zones (hazardous areas) on oil tankers, chemical tankers and gas carriers.

2.2.7.10.1 The maintenance records for all electrical equipment installed in dangerous spaces and zones on oil tankers, chemical tankers and gas carriers shall be reviewed. The record includes the following as a minimum: date of inspection, identification of any

maintenance found necessary, details of maintenance and date when it was completed, name of companies and persons who carried out the inspection and maintenance.

2.2.7.10.2 Repaired or replaced electrical equipment shall be surveyed in accordance with IEC 60079-17:2013.

2.2.7.10.3 Additional requirements for electrical equipment survey depending on the ship type are given in Part III "Additional Surveys of Ships Depending on their Purpose and Hull Material".

2.2.7.10.4 Electrical equipment shall be examined with respect to:

no unauthorized modifications;

equipment marking in order;

the enclosure is in satisfactory condition;

bolts of the enclosure are tight and in satisfactory condition;

there are no strains, poor insulation/or loosened connection to the electrical equipment in the enclosure;

cable glands are tight and in good condition;

gasket is in good condition;

equipment earthing/bonding in order;

cables in good condition;

specific for protection type — refer to Part XI "Electrical Equipment" of the Rules for the Construction and Classification of Sea-Going Ships (based on survey results provided by a competent organization):

Ex-d: the flame path is in satisfactory condition;

Ex-p: the protective gas pressure and flow are adequate;

Ex-m: the resin in the enclosure is not damaged;

areas protected by overpressure:

test audible and visual alarm in manned station upon loss of pressure;

check automatic or manual disconnection.

2.2.7.10.5 The insulation resistance of cabling, as well as of electrical equipment and cable runs in dangerous spaces and zones shall be measured.

2.2.7.10.6 In case of any findings, the RS surveyor may extend the survey, requiring the examination of functions including the opening of enclosures.

2.2.8 Automation equipment.

2.2.8.1 Control, governors, monitoring, alarm, indication and protection systems shall be examined and operationally tested during the relevant operational testings of machinery and equipment mentioned under 2.2.2 — 2.2.7.

2.2.8.2 The emergency stop devices of main machinery shall be operationally tested.

2.2.8.3 The remote starting of main machinery shall be tested when electric power supply is restored after blackout.

2.2.8.4 The change-over devices of the control stations of main and auxiliary machinery (wheelhouse 7 main machinery control room 7 local control station), as well as devices for controlling this machinery from each of the stations shall be operationally tested.

2.2.8.5 The automation equipment of electric power plant shall be tested for automatic starting after blackout.

2.2.8.6 The auxiliary machinery essential for the operation of main machinery shall be tested by remote starting and shutdown (from main machinery control room), and standby machinery shall be tested by automatic starting with a simultaneous alarm system inspection.

2.2.8.7 The protection systems of boiler plants shall be tested under conditions of flame failure, water level drop in the boiler, air pressure drop before the boiler furnace, and the remote shut down of the electric motor driving the fuel pump of the boiler.

2.2.8.8 The automated operation of machinery installation is prohibited if the remote automated control, governor, alarm or protection systems of main machinery or auxiliary

machinery essential for the operation of main machinery become inoperable, until the faulty automation equipment operability is restored.

2.2.8.9 At annual surveys computers and computer-based automation systems of the devices and machinery subject to technical supervision shall be operationally tested using test programmes and special programmes according to their intended purpose.

2.2.8.10 The following equipment of the dynamic positioning system (DP-system) shall be examined: electric machines and electric machine converters and transformers; power static semi-conductor converters and transformers; switchboards; uninterruptible power supply arrangements; power cabling, control and information cabling, including measuring of insulation resistance; control and monitoring consoles; switchgear and control gear and protective devices, computer and computer-based systems with software; ship's position sensors system; alarm system. Availability of entries on the prescribed ship's maintenance and absence of comments on the system in the ship's log-books shall be checked. If during the survey some of the DP-system equipment affecting the system operability is found inoperative, the distinguishing mark **DYNPOS** shall be excluded from the ship's class notation about which an entry is made in the Classification Certificate.

2.3 INTERMEDIATE SURVEY

2.3.1 General.

2.3.1.1 Intermediate survey shall be carried out either at or between the second and third annual surveys. Items, which are additional to the items to be surveyed at annual surveys, may be surveyed either at or between the second and third annual survey.

Prior to intermediate survey, the shipowner shall agree with the Register the scheduled full scope of survey.

2.3.1.2 Intermediate survey covers the inspection of hull structures, machinery, boilers and pressure vessels, equipment and outfit, electrical equipment as well as, where applicable, life-saving appliances and arrangements, signal means, radio equipment and navigational equipment to confirm their compliance with the RS requirements.

2.3.1.3 All self-propelled ships are subject to intermediate surveys.

The scope of survey depending on the age and purpose of the ship is set forth in Table 2.1.1-1, Table 2.1.1-2 (as applicable), paras 2.3.2 — 2.3.4 of this Part and Part III "Additional Surveys of Ships Depending on Their Purpose and Hull Material".

2.3.1.4 As regards the survey of the outside of the ship's bottom, the provisions of 2.5 shall be met.

2.3.1.5 At intermediate survey, some of the items may be submitted during the second and others during the third annual survey, with a relevant entry to be made in the certificates after carrying out the intermediate survey to the full. The submittal of the items shall be recorded in relevant reports.

2.3.1.6 Assessment of technical condition of the items subject to the Register supervision (wear rates, clearances in bearings, test pressure, load, insulation resistance values) against the acceptable service condition shall be carried out in compliance with provisions of Section 5, Part I "General Provisions".

2.3.1.7 Prior to commencement of the intermediate ship survey, a meeting on survey planning and scope shall be held so as to ensure the safe and efficient execution of the survey. A survey planning meeting shall be held between the RS attending surveyor, the shipowner or duly authorized representative of the shipowner, the master of the ship or duly authorized representative of the master as well as, at the shipowner's discretion, the representatives of other interested organizations, and the Minutes of Meeting on Planning and Arrangement of Ship's Survey (form 6.6.2) shall be drawn up.

Prior to commencement of the survey the RS surveyor shall verify that the shipowner has prepared the ship for survey and provided all necessary conditions for quality and safe execution of the survey and testing of items (refer to Section 4, Part I "General Provisions").

2.3.2 Hull.

2.3.2.1 The scope of survey of hull structures at intermediate survey of a ship consists of the scope of the annual hull survey and the scope of additional hull surveys depending on the ship type, age and coating condition of ballast tanks. Ballast tanks and cargo holds shall be surveyed in accordance with the provisions of 2.3.2.1.1 — 2.3.2.1.2.

Concurrent crediting to both intermediate survey and special survey for surveys and thickness measurements of spaces are not acceptable.

2.3.2.1.1 Survey of ballast tanks.

2.3.2.1.1.1 For ships between 5 and 10 years of age, a general, internal examination of representative ballast tanks shall be carried out. If there is no hard protective coating, soft or semihard coating, or POOR hard coating condition, the examination shall be extended to other ballast spaces of the same type.

2.3.2.1.1.2 For ships over 10 years of age, a general, internal examination of all ballast tanks shall be carried out.

2.3.2.1.1.3 If such examinations reveal no visible structural defects, the examination may be limited to verification that the corrosion prevention system remains effective.

2.3.2.1.1.4 Where provided, the condition of corrosion prevention system of ballast tanks shall be examined. The ballast tanks (excluding double bottom tanks) shall be examined at annual intervals, where:

a hard protective coating is found in POOR condition and it is not renewed; or

soft or semihard coating has been applied; or

a hard protective coating was not applied from time of construction.

Thickness measurements shall be carried out as deemed necessary by the surveyor.

2.3.2.1.1.5 For double bottom ballast tanks, where a hard protective coating is found in POOR condition and it is not renewed, where a soft or semihard coating has been applied, or where a hard protective coating was not applied from the time of construction, the tanks in question may be examined at annual intervals. When considered necessary by the RS surveyor, or extensive corrosion exists, thickness measurements shall be carried out.

2.3.2.1.1.6 Based on survey results the RS surveyor makes a record on the necessity of ballast tanks to be examined at annual intervals into the relevant RS reporting documents, the List of Ship's Status taking into account the requirements of 2.3.2.1.1.4 and 2.3.2.1.1.5.

2.3.2.1.2 Survey of cargo spaces.

2.3.2.1.2.1 In the case of ships over 15 years old, internal examination of cargo spaces (holds and 'tweendecks) selected by the surveyor shall be carried out.

N o t e . This requirement is not applicable to cargo holds of all self-propelled bulk carriers (single skin and double skin) and general dry cargo ships, which are surveyed in compliance with Sections 5 — 7 of Part III "Additional Surveys of Ships Depending on their Purpose and Hull Material".

2.3.2.1.2.2 In the case of ships over 10 years of age, other than ships engaged in the carriage of dry cargoes (refer to 2.3.2.1.2.1) or ships subject to Sections 2, 3, 4 and 8, Part III "Additional Surveys of Ships Depending on their Purpose and Hull Material", an internal examination of the cargo spaces selected by the surveyor shall be carried out.

2.3.2.2 Thickness measurements of structures in areas subject to close-up surveys shall be carried out simultaneously with the close-up surveys.

If necessary, thickness measurements shall be carried out in compliance with provisions of 2.4.2.6.

Instructions on thickness measurements planning, performance, control and reporting are given in Appendix 2 to these Rules.

2.3.2.3 Recommendations on the examination and identification of the areas where residual deformations and cracks are most likely to appear and instructions on the survey of the worn hull members in areas liable to intensive wastage due to corrosive environment, sweating, insufficient ventilation and excessive humidity where technical maintenance during operation is impeded are set out in 2.2.2.3, Part II "Carrying Out Classification Surveys of Ships" of the Guidelines.

2.3.2.4 Survey of flexible attachments of deck houses.

Except where provision is made for annual surveys, the general condition of flexibly attached deckhouses shall be assessed at intermediate survey, and/or they shall be examined in case of damage to the following components:

expansion joints (taking into consideration possible prestressing of threaded connections);

insulation;

devices guarding the deckhouse against shifting or lifting;

pipe and cable attachments to the hull.

Attachment components that are not directly accessible shall be dismantled and examined where damage may be expected.

2.3.2.5 Survey of loading instruments and stability instruments is carried out in accordance with 2.2.2.5.

2.3.2.6 Survey of air pipes and ventilator pipes.

At intermediate survey of ships over 10 years of age, the survey of automatic air pipe heads shall be carried out in accordance with 2.4.2.7.

Survey of air pipes and ventilator pipes in the fore part of the ship (IACS UR S27) is carried out according to 2.4.2.8 of this Part.

Ships whose keels were laid on or after 1 January 2012 shall be checked for the availability of safe access to the controls for closure of ventilation ducts (refer to 12.1.10, Part VIII "Systems and Piping" of the Rules for the Classification and Construction of Sea-Going Ships) leading to cargo, machinery and other spaces fitted with fire smothering systems.

2.3.2.7 Survey of small hatches on the fore deck of the ship (IACS UR S26) is carried out according to 2.4.3.2.9 of this Part.

2.3.2.8 Hull technical condition shall be assessed in accordance with Section 5, Part I "General Provisions".

2.3.3 Machinery installation, ship's arrangements, systems and piping.

2.3.3.1 At intermediate survey, in addition to the scope of annual survey specified in 2.2.3, 2.2.5 and 2.2.6, the surveys listed in 2.3.3.2 — 2.3.3.5 shall be carried out.

2.3.3.2 At intermediate surveys, the following equipment shall be operationally tested:

emergency drainage valve of engine room;

drainage, ventilation, monitoring and control systems used during the carriage of dangerous goods;

control systems of main, auxiliary and emergency steering gears.

2.3.3.3 If an intermediate survey of a ship is carried out simultaneouslly with survey in dry dock, the shafting, propellers and AMSS shall be surveyed according to 2.11.

If no shafting survey according to any method given in 2.11 is required or scheduled during the intermediate survey, in addition to the scope of surveys specified in 2.2.5.6, the shafting and propellers shall be surveyed in the scope stated in 2.5.7.5 and 2.5.7.6.

2.3.3.4 The survey of propeller-rudder system, other systems, piping at survey of the outside of the ship's bottom shall be carried out in accordance with 2.5.7 or 2.5.8, whichever is applicable.

2.3.3.5 If intermediate survey covers survey of the outside of the ship's bottom in dry dock, and if the main and auxiliary machinery, shafting, propellers, rudder and steering gear are repaired during the time preceding special survey of the ship or during the special survey, they shall be tested in the presence of the surveyor during mooring and sea trials in order to check and confirm the characteristics required by the Rules. At that the scope and duration of testing is determined by the surveyor taking into consideration the extent and nature of the repair made.

2.3.3.6 Survey of ship boilers is an integral part of intermediate survey and shall be carried out in compliance with 2.10.

2.3.3.7 Survey of machinery installation/machinery may be carried out on a PMS basis in accordance with 2.7.

2.3.3.8 Survey of machinery installation/machinery may be carried out on a CM/CBM basis in accordance with 2.8.

2.3.4 Electrical equipment.

2.3.4.1 At intermediate survey, in addition to the scope of annual survey mentioned in 2.2.7, measurements of insulation resistance of generators and electric motors of essential equipment, including cables and switches, shall be carried out.

In oil tankers, gas carriers, chemical tankers and other types of ships with spaces and areas, in which explosive mixtures of vapours, gases or dust with air are likely to occur, the electrical equipment, cables and earthing of dangerous zones (dangerous spaces and

areas as well as classification of dangerous zones are given in 2.9, 19.2, 19.3 and 19.11, Part XI "Electrical Equipment" of the Rules for the Classification and Construction of Sea-Going Ships) shall be examined (as a minimum according to IEC 60079-17:2013) and the insulation resistance of electric circuits shall be measured.

Where the ship's logs are kept properly, approval of the latest measured data may be considered.

2.4 SPECIAL SURVEY

2.4.1 General.

2.4.1.1 Special survey for class renewal is intended for determining whether the ship's technical condition and structural and composition modifications of its items comply with the requirements of the Rules.

2.4.1.2 Special survey shall include survey of the outside of the ship's bottom in compliance with 2.5.

2.4.1.3 At special survey the shipowner shall prepare the ship for survey and provide necessary conditions for surveys and testing of the items in accordance with Section 4, Part I "General Provisions".

2.4.1.4 Special survey shall be carried out at 5-year intervals to renew the class in compliance with the requirements of 2.4.1.4.1 — 2.4.1.4.9.

2.4.1.4.1 The first special survey shall be completed within 5 years from the date of the initial survey after construction and thereafter 5 years from the credited date of the previous special survey.

2.4.1.4.2 Special survey may be commenced at the 4th annual survey and be progressed with a view to completion by the 5th anniversary date. When special survey is commenced prior to the 4th annual survey (more than 15 months before the 5th anniversary date), the entire survey (including survey of the outside of the ship's bottom in dry dock) shall be completed within 15 months before actual date of survey completion if such work shall be credited to special survey. Regarding survey of the outside of the ship's bottom in dry dock, refer also to 2.5.

2.4.1.4.3 On completion of special survey, the surveys of the items of technical supervision, which were carried out in the required scope not more than 15 months before the 5th anniversary date/actual date of survey completion (including survey of the outside of the ship's bottom in dry dock), may be credited, as appropriate, considering 2.4.1.4.2.

2.4.1.4.4 The due date of the next special survey is assigned based on the 5-year period starting from the credited date of the previous special survey, except for the cases when this period starts from the date of completion of the surveys, namely:

.1 initial survey after the ship construction;

.2 initial (in the scope of special) survey for assignment of class to the ship constructed without technical supervision of the Register or recognized classification society;

.3 from the date of completion of special survey carried out by the classification society — IACS member in case of transfer of class of ship with the valid class of the recognized classification society (retention of dates of periodical surveys);

.4 from the date of completion of initial survey carried out by the Register in case of transfer of class of the ship with the valid class of the recognized classification society, if initial survey was carried out in the scope of special survey;

.5 from the date of completion of special survey carried out by the Register for renewal of class taking into account 2.4.1.4.5 — 2.4.1.4.9;

.6 from the date of completion of occasional (in the scope of special) survey at reassignment of class to the ship, which class was withdrawn.

2.4.1.4.5 If special survey for class renewal is completed within 3 months before the expiry date of special survey, the next period of class is established for 5 years beginning from the expiry date of special survey. In this case the period of validity of a new Classification Certificate (hereinafter referred to as "the Certificate") begins from the date of completion of the special survey until the date not later than 5 years after the date of expiration of period of the existing Certificate validity.

2.4.1.4.6 If the special survey for class renewal is completed after the expiry date of the special survey (including the cases when extension was granted according to 2.4.1.4.10), the next period of class is established for 5 years starting from the expiry date of special survey.

In this case, the new Certificate is valid from the date of completion of the special survey to the date not exceeding 5 years from the date of expiry of the existing Certificate not considering extension of the special survey and of the existing Certificate.

2.4.1.4.7 If special survey for class renewal is completed more than 3 months before the expiry date of special survey, the next period of class is established for 5 years beginning from the survey completion date. In this case the period of validity of a new Certificate begins from the date of completion of the special survey until the date not later than 5 years after the date of completion of this survey.

2.4.1.4.8 In exceptional circumstances (refer to definition in 2.1, Part I "General Provisions"), when the ship is submitted for overdue special survey or initial survey in the scope of special survey (as applicable), at the shipowner′s discretion and on agreement with RHO, the period of class may be established from the date of completion of the initial/special survey if such survey is carried out in the scope prescribed for the next (depending on the ship's age) special survey. Otherwise, the next period of class shall be established in accordance with 2.4.1.4.6.

To comply with this requirement for ships over 15 years of age, it is sufficient to carry out such survey in the scope prescribed for the special survey based on the age of the ship.

2.4.1.4.9 Considering the ship's age and changes in its technical condition, reduced intervals between special surveys may be assigned. Such decision, this and further special surveys' scope and schedule shall in each case be reviewed by the Register.

2.4.1.4.10 Extension of special survey.

Under special circumstances, the Register may grant an extension not exceeding three (3) months to allow for completion of the special survey provided that the ship is attended and the attending RS surveyors so recommend after the following has been carried out:

.1 occasional survey in full scope of annual survey;

.2 verification of compliance with the requirements or review of the possibility to postpone fulfillment of the requirements and other conditions of class prescribed for the due date of the special survey;

.3 special survey in the maximum possible scope;

.4 in-water survey carried out in accordance with 2.5.1.2 by the organization recognized by RS or ACS — IACS member taking into account the provisions of Section 7, Part I "General Provisions". In-water survey may be dispensed with in the case of extension of terms of special survey not exceeding 36 months interval provided the ship is without outstanding requirements and other conditions of class regarding the outside of the ship's bottom. Reviewing matters relating to the extension of special survey, assignment of conditions and determination of scope of occasional survey (not less than determined by 2.4.1.4.10.1 — 2.4.1.4.10.4) shall be within the competence of:

for ships over 100 gross tonnage — RHO;

for ships of 100 gross tonnage and less — RS Branch Office which will perform the relevant survey of the ship, or in case of the absence of the request for survey — RS Branch Office which is located in the area of permanent operation of the ship.

The issue related to the extension of special survey is considered based on the shipowner's written request. For this purpose, the shipowner shall apply with a request to RS. The shipowner in his request shall provide the documentary evidence confirming the occurrence of special circumstances. Upon review of the shipowner's request for extension of special survey of the ship over 100 gross tonnage RHO forwards its opinion to the RS Branch Office which will perform occasional survey of the ship. Taking final decision on granting an extension of special survey is within the competence of the Director/Head of the RS Branch Office which performed the occasional survey prescribed by this paragraph. Such a decision is made based on the survey results considering whether the prescribed conditions are complied with.

2.4.1.5 At the shipowner's request, the Register establishes the Continuous Survey System (CCS) of the ship (hull, arrangements, machinery, electrical equipment, refrigerating plant), refer to 2.6.

2.4.1.6 At the shipowner's request, as an alternative to CCS, the Register may establish an approved Planned Maintenance Scheme (PMS), refer to 2.7.

2.4.1.7 Application by the shipowner of the inspection and maintenance schemes of the ship's hull shall be encouraged as the means for providing the compliance with the classification and statutory requirements in the intervals between the RS surveys. However, these schemes shall not be recognized as the alternative to or replacement of the required classification and/or statutory surveys of the ship's hull carried out by the surveyors to the Register or other duly authorized classification society. The surveyor may be assisted, where appropriate, by service suppliers as defined in Section 7, Part I "General Provisions".

2.4.1.8 Prior to commencement of the special ship survey, a meeting on survey planning and scope shall be held so as to ensure the safe and efficient execution of the survey. The meeting shall be held between the RS attending surveyor, the shipowner or duly authorized representative of the shipowner, the master of the ship or duly authorized representative of the master as well as, at the shipowner's discretion, the representatives of other interested organizations, and the Minutes of Meeting on Planning and Arrangement of Ship's Survey (form 6.6.2) shall be drawn up.

Prior to commencement of the survey the RS surveyor shall verify that the shipowner has prepared the ship for survey and provided all necessary conditions for quality and safe execution of the survey and testing of items (refer to Section 4, Part I "General Provisions").

2.4.1.9 Summarized scope of surveys is given in Tables 2.1.1-1 and 2.1.1-2, and in the relevant chapters of this Section.

2.4.2 Hull.

2.4.2.1 General.

2.4.2.1.1 Concurrent crediting to both intermediate survey and special survey for surveys and thickness measurements of spaces are not acceptable.

2.4.2.2 Scope of survey.

2.4.2.2.1 Special survey shall include, in addition to the requirements for annual surveys (refer to 2.2.2), examinations, tests and checks of sufficient extent to ensure that the hull, equipment, outfit and relayed piping, as required in 2.4.6.1, are in satisfactory condition and meet the intended purpose for the new period of class of five years to be assigned, subject to proper maintenance and operation and the periodical surveys being carried out at the due dates.

2.4.2.2.2 The survey of the hull shall be supplemented by thickness measurements, as required in 2.4.2.6, and testing, as required in 2.4.2.5, to ensure that the structural integrity remains effective. The aim of the survey is to discover substantial corrosion, significant deformation, fractures, damages or other structural deterioration that may be present.

2.4.2.2.3 All spaces including holds and their 'tweendecks where fitted; double bottom, deep, peak, ballast and cargo tanks; pump rooms, pipe tunnels, duct keels, machinery spaces, dry spaces, cofferdams and voids shall be internally examined including the plating and framing, bilges and drain wells, sounding, pumping, venting and drainage arrangements. Internal examination of fuel oil, lube oil and fresh water and other tanks shall be carried out in accordance with Table 2.4.2.2.3. At the third special survey and subsequent special surveys, structural downflooding ducts and structural ventilation ducts shall be internally examined.

Independent tanks including the tank supporting structures shall be externally examined. If unsatisfactory condition of its structures revealed upon results of the external examination, the tanks shall be internally examined.

Table 2.4.2.2.3

Minimum requirements for internal examination at hull special surveys of fuel oil, fresh oil, fresh water and other tanks

Nos.	Tank	Special survey No. 1 age ≤ 5	Special survey No. 2 5 < age ≤ 10	Special survey No. 3 10 < age ≤ 15	Special survey No. 4 and subsequent age > 15
1	Fuel oil bunker tanks in:				
	.1 engine room	None	None	One	One
	.2 cargo length area	None	One	Two	Half, minimum 2
	.3 if no tanks in cargo length area, additional fuel tank(s) outside of engine room (if fitted)	None	One	One	Two
2	Lube oil tanks	None	None	None	One
3	Fresh water tanks	None	One	All	All
4	Vegetable oil, whale oil tanks	None	One of each type	All	All

N o t e s : 1. All requirements of this Table apply to tanks of integral (structural) type.
2. If a selection of tanks of several types is accepted to be examined, then different tanks shall be examined at each special survey, on a rotation basis.
3. Peak tanks (all uses) are subject to internal examination at each special survey.
4. At special surveys No. 3 and subsequent surveys, one deep tank for fuel oil in the cargo length area shall be included, if fitted.

2.4.2.2.4 Scope of special survey may be extended by the surveyor in each particular case on the assumption that the examination extent will gradually increase as the ship grows older.

At survey of hull structures of the ships, particular attention shall be given to critical structural areas (if applicable) as well as hull members in areas liable to intensive wastage due to corrosive environment, sweating, insufficient ventilation and excessive humidity as well as in areas where residual deformations, ruptures and cracks are likely to appear (refer to 2.2.2.3, Part II "Carrying Out Classification Surveys of Ships" of the Guidelines).

2.4.2.2.5 At special survey the engine room shall be surveyed. Particular attention shall be given to tank tops, hull shell plating at tank tops, brackets connecting side shell frames and tank tops, engine room bulkheads in way of tank tops and bilge wells. Particular attention shall be paid to the sea suctions, sea water cooling piping and overboard discharge valves and their connections to the shell plating. Where wastage is evident or suspect, thickness measurements shall be carried out. Where wastage exceeds allowable limits, renewals or repairs of damaged parts of hull structure shall be made.

2.4.2.2.6 During survey special attention shall be paid to the following:

areas where hull section varies appreciably and in way of main longitudinals;

shell plating near openings (side ports, side scuttles, scuppers, fittings of systems echo-sounder vibrators and plating under sounding pipes, etc.);

interfaces of structures made of aluminium alloys and those made of steel with a view to assessing corrosion intensity and the condition of insulating pads in joints;

sheer strake, deck stringer and bulwark in way of end bulkheads of superstructures and upper deck breaks;

deck plating in way of hatch corners and long deckhouses, and in the corners of dredging cut in hoppers and open barges;

lower areas of superstructure/deckhouse walls;

structures inside machinery, service, accommodation, working and other similar spaces;

enclosed parts of the upper deck plating.

During survey the provisions of 2.2.2.3.1, Part II "Carrying Out Classification Surveys of Ships" of the Guidelines shall be also taken into consideration.

In oil tankers, the bottom and bulkhead plating in way of cargo piping suctions, attachments of protectors and other equipment shall be thoroughly examined from inside the cargo tanks. Beginning from the second special survey, additionally the attention shall be paid to the lower sections of watertight bulkheads, propeller shaft recesses and tunnels, as well as the lower sections of the end bulkheads of superstructures, hatch coamings, ventilator cowls in cargo tanks, ventilator pipes and ventilators.

2.4.2.2.7 At the bulwark survey, the port covers shall be tested for jamming.

2.4.2.2.8 Beginning from the second special survey the chain lockers shall be internally examined.

2.4.2.2.9 For the purpose of the first special survey of structures inside the spaces (ships less than 5 years of age), the shipowner shall provide the following:

opening-up of panelled floor ceilings above bilges and bilge wells in holds;

removal of floor ceilings or planks of holds in way of centre-plane girder or at bilge on each side in ships without a double bottom to make possible the examination of areas where transverse bulkheads are attached to hull structures;

removal of, at least, one strake of planks in way of the upper turn of bilge and in the upper section of the side in ships with continuous wooden cladding of sides in holds;

removal of cement or other bottom coat where it gets detached from the hull, in several places at the surveyor's discretion.

2.4.2.2.10 For the purpose of the second special survey of structures inside the spaces (ships aged between 5 and 10 years), the shipowner shall provide the following:

opening-up of panelled floor ceilings above bilges and bilge wells in holds;

removal of floor ceilings or planks of holds in way of centre-plane girder or at bilge on each side in ships without a double bottom to make possible the examination of areas where transverse bulkheads are attached to hull structures;

partial opening-up, at the surveyor's discretion, of wooden planking in holds for examination of the inner bottom steel plating;

partial opening-up, at the surveyor's discretion, of wooden planking or mastic-and-paint coat of the upper deck for examination of the steel plating;

partial opening-up, at the surveyor's discretion, of the insulation in refrigerated holds and chambers for survey of the plating and framing;

local opening-up, at the surveyor's discretion, of the wooden and other cladding in accommodation and service spaces where extensive corrosion wear might be expected, especially in way of side scuttles, if the technical condition of the structure cannot be assessed without opening-up.

2.4.2.2.11 For the purpose of the third and subsequent special surveys (ships more than 10 years of age), the shipowner shall provide the access to the structures inside the spaces by opening-up of extended area of wooden planking and side cladding of holds, deck wooden planking or mastic-and-paint coat, refrigerated hold and chamber insulation, wooden and other cladding and insulation in accommodation and service spaces, cementation and other bottom coats to ensure an extended scope of examination of enclosed structures and the required thickness measurements of planking, plating and framing. Where necessary, structures and equipment shall be dismantled, which make access difficult for examination and framing scantlings measurement, and solid ballast shall be removed.

2.4.2.2.12 For correct application and interpretation of 2.4.2.2.9, 2.4.2.2.10 and 2.4.2.2.11, the following shall be considered:

.1 casings, ceilings or linings, and loose insulation, where fitted, shall be removed, as required by the surveyor, for examination of plating and framing. Compositions on plating shall be examined and sounded, but need not be disturbed if found adhering satisfactorily to the plating;

.2 in refrigerated cargo spaces the condition of the coating behind the insulation shall be examined at representative locations. The examination may be limited to verification that

the protective coating remains effective and that there are no visible structural defects. Where POOR coating condition is found, the examination shall be extended, as deemed necessary by the surveyor. The condition of the coating shall be reported. If indents, scratches, etc. are detected during surveys of shell plating from the outside, insulations in way shall be removed as required by the surveyor, for further examination of the plating and adjacent frames.

2.4.2.2.13 Special hull survey with CSS application shall be carried out in compliance with 2.6.

2.4.2.3 Survey of the underwater hull.

2.4.2.3.1 Underwater hull bottom and related items shall be surveyed in dry dock in compliance with 2.5.

2.4.2.4 Corrosion prevention system of ballast tanks.

2.4.2.4.1 Where provided, the condition of corrosion prevention system of ballast tanks (condition of hard protective coating) shall be examined. During examination, provisions of Annex 52 to the Guidelines shall be considered. For ballast tanks, excluding double bottom tanks, where a hard protective coating is found in POOR condition and it is not renewed, where soft or semihard coating has been applied, or where a hard protective coating was not applied from time of construction, the tanks in question shall be examined at annual intervals. Thickness measurements shall be carried out as deemed necessary by the RS surveyor.

2.4.2.4.2 When such breakdown of hard protective coating is found in double bottom ballast tanks as specified in 2.4.2.4.1 and it is not renewed, where a soft or semihard coating has been applied, or where a hard protective coating was not applied from the time of construction, the tanks in question may be examined at annual intervals as deemed necessary by the RS surveyor. Where extensive corrosion exists, or when considered necessary by the RS surveyor, thickness measurements shall be carried out.

2.4.2.4.3 Based on survey results RS surveyor makes a record on the necessity of ballast tanks to be examined at annual intervals into the relevant RS reporting documents, the List of Ship's Status taking into account the requirements of 2.4.2.4.1, 2.4.2.4.2.

2.4.2.5 Scope of testing of tanks and other spaces.

2.4.2.5.1 Boundaries of double bottom ballast, other ballast tanks, deep, peak and other tanks, including cargo holds adapted for the carriage of water ballast, shall be tested with a head of liquid to the top of air pipes or to near the top of hatches for ballast/cargo holds.

2.4.2.5.2 Boundaries of fuel oil, lube oil, fresh water and other liquid tanks, and any independent tanks shall be tested with a head of liquid to the highest point that liquid will rise under service conditions.

Tank testing of fuel oil, lube oil and fresh water tanks may be specially considered based on satisfactory external examination of the tank boundaries, and a confirmation from the master stating that the pressure testing has been carried out according to the requirements with satisfactory results.

At the first special survey fuel oil, lube oil tanks, including double bottom tanks, may be tested with fuel oil or lube oil, accordingly.

2.4.2.5.3 The cargo tanks of oil tankers and their cofferdams may be tested crosswise so that each bulkhead in the whole area is tested. Tanks may be tested by filling them up to the lightship waterline when in dock with a subsequent filling-up to the hatch-coaming top when afloat.

2.4.2.5.4 The surveyor may extend the testing, as deemed necessary.

2.4.2.5.5 Standards and procedures of tightness testing are given in Annex 10 to the Guidelines, unless otherwise specified in the design documentation (as-built documentation, documentation on ship conversion, etc.).

2.4.2.5.6 Sea chests, log and echo-sounder trunks shall be tightness-tested at special surveys. They are tightness-tested during launching of the ship.

2.4.2.6 Extent of thickness measurements.

2.4.2.6.1 Instructions on thickness measurements planning, performance, control and reporting are given in Annex 2 to these Rules.

2.4.2.6.2 Depending on the ship age, thickness measurements of hull structures shall be carried out to the extent specified in Table 2.4.2.6.2-1. The surveyor may extend the thickness measurements, as deemed necessary. When thickness measurements indicate substantial corrosion, the extent of thickness measurements shall be increased to determine areas of substantial corrosion. Table 2.4.2.6.2-2 may be used as guidance for these additional thickness measurements. These extended thickness measurements shall be carried out before the survey is credited as completed.

Table 2.4.2.6.2-1

Minimum requirements for thickness measurements at special surveys

Special survey No. 1 Age ≤ 5	Special survey No. 2 5 < age ≤ 10	Special survey No. 3 10 < age ≤ 15	Special survey No. 4 and subsequent Age > 15
1. Suspect areas throughout the ship	**1.** Suspect areas throughout the ship **2.** One transverse section of deck plating in way of a cargo space within the amidships 0,5*L*	**1.** Suspect areas throughout the ship **2.** Two transverse sections within the amidships 0,5*L* in way of two different cargo spaces **3.** All cargo hold hatch covers and coamings (plating and stiffeners) **4.** Internals in forepeak and afterpeak ballast tanks	**1.** Suspect areas throughout the ship **2.** Three transverse sections in way of cargo spaces within the amidships 0,5*L* **3.** All cargo hold hatch covers and coamings (plating and stiffeners) **4.** Internals in forepeak and afterpeak ballast tanks **5.** All open parts of main deck plating full length **6.** Representative exposed superstructure deck plating (poop, bridge, and forecastle deck) **7.** Lowest strake and strakes in way of 'tweendecks of all transverse bulkheads in cargo spaces together with internals in way **8.** All wind and water strakes, port and starboard, full length **9.** All keel plates full length. Also, additional bottom plates in way of cofferdams, machinery space and aft end of tanks **10.** Plating of sea chests/ice boxes. Shell plating in way of overboard discharges, as considered necessary by the attending surveyor
Notes: 1. Thickness measurement locations shall be selected to provide the best representative sampling of areas likely to be most exposed to corrosion, considering cargo and ballast history and arrangement and condition of protective coatings. 2. Thickness measurements of internals may be specially considered by the surveyor if the hard protective coating is in GOOD condition. 3. For ships less than 100 m in length, the number of transverse sections required at special survey No. 3 may be reduced to one (1), and the number of transverse sections required at special survey No. 4 and at			

subsequent special surveys may be reduced to two (2).
4. For ships more than 100 m in length, at special survey No. 3, thickness measurements of exposed deck plating within the amidships 0,5L may be required.
5. Requirements of this Table apply to steel structures. For structures made of aluminium alloys, the scope of thickness measurements shall be determined by the RS surveyor upon the results of hull structures thorough examination.
6. Subject to cargo hold hatch covers of approved design which structurally have no access to the internals, thickness measurement shall be done of accessible parts of hatch covers structures.
7. Requirements of this Table apply to self-propelled ships. For non-self-propelled ships the scope of thickness measurements shall be determined by the RS surveyor upon the results of hull structures thorough examination, upon identification of defects, suspect arias, based on the item service conditions and etc.

Table 2.4.2.6.2-2

Guidance for additional thickness measurements in way of substantial corrosion

Structural member	Extent of thickness measurements	Pattern of thickness measurements
Plating	Suspect area and adjacent plates	Five point pattern over 1 m^2
Stiffeners	Suspect area	3 measurements, each in the wall cross-section and in free boom of frame girder

2.4.2.6.3 Technical condition assessment of hull structures based on the results of thickness measurements and special survey is performedin accordance with Section 5 of Part I "General Provisions" and Annex 2 to these Rules.

2.4.2.6.4 In addition to Table 2.4.2.6.2-1, starting from the second special survey (ships more than 5 years old), in way of cargo tanks of non-self-propelled oil tankers, random thickness measurements of plates shall be carried out where the corrosion wear of shell plating is the greatest, at upper deck plating, hatch coamings, ventilator cowls, ventilator pipe coamings.

2.4.2.6.5 In addition to Table 2.4.2.6.2-1, starting from the third special survey (ships more than 10 years of age), random thickness measurements shall be carried out in the way of the greatest wear of shell plating and watertight bulkhead framing; keel-girder plating and floors of hopper-dredger and open barge; sea chests; log and echo-sounder trunks; deck, platform and inner bottom plating; superstructure and deckhouse plating; hatch coamings; ventilator pipe coamings and air pipe coamings, main and auxiliary machinery and boiler seatings; branches of bottom and side valves; sea chest pipes; sea water filter casings as well as girders of bottom, side and deck framing.

2.4.2.6.6 In addition to Table 2.4.2.6.2-1, starting from the forth special survey (ships over 15 years of age), thickness measurements of ventilator pipe coamings and lower parts of platings of all superstructures and deckhouses located on the exposed parts of decks, all exposed parts of decks of superstructures/ deckhouses; random thickness measurements of the lower areas of superstructure/deckhouse walls; enclosed parts of the upper deck plating; as well as of members not replaced during repair shall be carried out. When required upon examination results, the RS surveyor may require thickness measurements of ship's hull structures, superstructures/deckhouses, including structures in machinery, service, accommodation, working and other similar spaces.

2.4.2.6.7 In addition to Table 2.4.2.6.2-1, for dry cargo ships with double bottom and double sides within the cargo area, starting from the third special survey the close-up survey and thickness measurements of the following structures within the cargo area shall be carried out:

.1 at least 50 % of transverse webs in each ballast tank including adjacent shell plating and longitudinals;

.2 at least 50 % of ordinary transverse frames (for transverse framing system) including adjacent plating or 50 % of longitudinals (for longitudinal framing system) including adjacent plating on side shell and inner side plating in all side ballast tanks;

.3 all parts of the inner bottom plating;
.4 all parts of the inner side plating;
.5 all cargo hold transverse bulkheads (plating and framing);
.6 all ballast tank transverse bulkheads (plating and framing).

N o t e . Where necessary, the scope of survey and thickness measurements of the structures specified in 2.4.2.6.7.1 and 2.4.2.6.7.2 may be extended up to 100 %, if requested by the RS surveyor.

2.4.2.7 Survey of air pipes and ventilator pipes.

2.4.2.7.1 For all ships, including passenger ships, automatic air pipe heads located on the exposed decks shall be completely surveyed (both externally and internally) in compliance with Table 2.4.2.7.1 and Annex 37 to the Guidelines.

T a b l e 2.4.2.7.1

Survey requirements for automatic pipe heads at special surveys

Special survey No.1 Age ≤ 5	Special survey No.2 5 < age ≤ 10	Special survey No.3 and subsequent Age > 10
1. Two air pipe heads[1,2], one port and one starboard, located on the exposed decks in the forward 0,25*L*, preferably air pipes serving ballast tanks **2.** Two air pipe heads[1,2], one port and one starboard, on exposed decks, serving spaced aft of 0,25*L*, preferably air pipes serving ballast tanks	**1.** All air pipe heads[1,2] located on the exposed decks in the forward 0,25*L* **2.** At least 20 % of air pipe heads[1,2] on the exposed decks serving spaces aft of 0,25*L*, preferably air pipes serving ballast tanks	**1.** All air pipe heads located on the exposed decks[3]
[1] The selection of air pipe heads to be surveyed is left to the attending surveyor. [2] According to the results of this survey, the surveyor may require the survey of other heads located on the exposed decks. [3] Exclusion shall be made for the air pipes replaced in the previous 5-years period, if it is confirmed by the documents.		

2.4.2.7.2 For designs where the inner parts cannot be properly inspected from outside, this shall include removal of the head from the air pipe. Particular attention shall be paid to the condition of the zinc coating in heads constructed from galvanized steel.

2.4.2.7.3 After removal of the heads, parts of air pipes located above the deck shall be cleaned and subjected to external and internal examination. When suspect areas are found, thickness measurements shall be carried out.

2.4.2.7.4 Ventilator pipes on the exposed decks shall be thoroughly examined. The integral with the hull ventilator pipes/ducts shall be internally examined in compliance with 2.4.2.2.3. Extent of thickness measurements of the ventilator pipe coamings shall comply with 2.4.6. In any case, when suspect areas are found, thickness measurements shall be carried out.

2.4.2.7.5 Where required by results of survey and assessment of technical condition, the repair shall be performed under the RS surveyor technical supervision. The results shall be recorded in the relevant RS reporting documents. Besides, the RS surveyor shall record the information on completed surveys and replacements of automatic air pipe heads in the relevant RS reporting documents, indicating frame numbers, tank and deck number and type, and date of survey/replacement. Documents considered by the RS surveyor during the survey and confirming that replacements have been made, are recommended to be copied to the ship's file.

2.4.2.8 Survey of fore air pipes and ventilator pipes.

2.4.2.8.1 In addition to 2.4.2.7, this para stipulates requirements for air pipes and ventilator pipes and their closing devices on the exposed decks in the fore part of the ship.

2.4.2.8.2 These requirements apply to:

.1 all ship types of length 80 m and more that are contracted for construction on or after 1 January 2004, built in non-compliance with the Rules for the Classification and Construction of Sea-Going Ships, 2005, and the requirements of IACS UR S27, where the height of the exposed deck in way of air pipes and ventilator pipes within 0,25L from the forward perpendicular is less than 0,1L or 22 m above the summer load waterline, whichever is the lesser;

.2 bulk carriers, ore carriers, combination carriers (as defined in 2.2.7 of Part I "General Provisions" of these Rules) and general dry cargo ships (excluding container ships, ro-ro ships and woodchip carriers) of length 100 m and more that are contracted for construction prior to 1 January 2004 and do not meet the requirements of IACS UR S27, where air pipes and ventilator pipes serve the spaces forward of the collision bulkhead or extend over this line afterwards.

2.4.2.8.3 Air pipes and ventilator pipes, and their closing devices shall be subject to verification for compliance with the applicable requirements of 1.4.6, Part VIII "Systems and Piping" of the Rules for the Classification and Construction of Sea Going Ships (not applicable to CSR ships).

2.4.2.9 Survey of loading instruments and stability instruments.

Loading instruments and stability instruments shall be surveyed according to 2.2.2.5.

2.4.3 Ship's arrangements, equipment and outfit.

2.4.3.1 General.

2.4.3.1.1 At special survey of the ship, the list of items of ship's arrangements, equipment and outfit, their completeness, design, arrangement and installation, as well as specified characteristics shall be checked for their compliance with the requirements of the Rules for Construction. At that the technical condition of the items shall be assessed and their defects revealed.

2.4.3.1.2 The survey of ship's arrangements, equipment and outfit subject to the Register technical supervision, which design is not regulated by the Rules, shall be carried out in compliance with the requirements specified by the Register in each case.

2.4.3.1.3 During survey of the ship, those items may not be surveyed for the second time, which have been surveyed in the necessary scope within 15 months before the date of the special survey.

Where, due to some reasons, certain items shall be submitted for survey before the due date of periodical survey, the date of ship submitting for occasional survey with regard to these items shall be established.

2.4.3.1.4 For ship's arrangements, equipment newly installed on board, and for outfit taken onboard, as well as in case of their replacement, documents testifying to the products manufacture supervision by the Register shall be submitted.

If ship's arrangements and equipment are newly installed onboard or as-repaired, the tests shall be conducted, which are prescribed for the case of their manufacture and installation on board.

2.4.3.1.5 For the purpose of the survey, ship's arrangements, equipment and outfit shall be prepared accordingly, and access, opening-up and/or dismantling shall be ensured where necessary. Items to undergo survey and operational testing shall be submitted in working order.

2.4.3.1.6 The extent of individual examinations, measurements, checks and tests shall be specified by the Register based on the relevant provisions of this Chapter and with due regard to the particular survey conditions.

The extent of examinations and measurements stipulated by this Chapter and of associated openings-up and dismantling may be changed by the surveyor in each case with due regard to the design, service life, results of the previous survey, repairs and replacements effected earlier, as well the results of survey in readily accessible places and operational testing.

2.4.3.1.7 Unless expressly provided by this Chapter, the survey of machinery, cylinders, systems and piping, electrical equipment forming part of ship's arrangements, equipment and outfit shall be carried out in compliance with the requirements of the relevant Chapters of these Rules.

2.4.3.2 Closures of openings in hull, superstructures and deckhouses.

2.4.3.2.1 The summarized extent of checks (tests) of closures of openings in hull, superstructures and deckhouses during survey of the ship is given in Table 2.1.1-1 of Part II "Survey Schedule and Scope".

2.4.3.2.2 During survey to be examined and checked (tested) for tightness are hatch and manhole covers on the open area of freeboard deck and enclosed superstructures, as well as inside superstructures, which are not enclosed; closures of bow, side and aft openings in hull; companion hatches, skylights and ventilating trunks; scuttles; covers of ventilator pipe coamings on freeboard and superstructure decks and deckhouses.

Hatch covers in 'tweendeck spaces shall be examined.

2.4.3.2.3 Survey of hatch covers and coamings.

Hatch covers and coamings shall be surveyed as follows:

.1 a thorough inspection of the items listed in 2.2.3.7, including close-up survey of hatch cover plating and hatch coaming plating, shall be carried out. Subject to cargo hold hatch covers of approved design which structurally have no access to the internals, close-up survey shall be done of accessible parts of hatch covers structures;

.2 checking of the satisfactory operation of all mechanically operated hatch covers shall be made, including:

stowage and securing in open condition;

proper fit and efficiency of sealing in closed condition;

operational testing of hydraulic and power components, wires, chains and link drives;

.3 checking of the effectiveness of sealing arrangements of all hatch covers by hose testing or equivalent shall be carried out.

2.4.3.2.4 Watertight bulkhead and side shell doors, bow and stern visor doors for loading vehicles are subject to thorough examination, and their drives with indicators, as well as hatch cover drives, shall be operationally tested. Sliding doors shall be additionally tested with a feeler gauge. The feeler gauge of 0,05 mm in length shall not penetrate through the entire perimeter of sealing.

2.4.3.2.5 Metal hatch covers on the freeboard and superstructure decks, doors of bow, side and after openings in hull exposed to sea shall be tightness tested together with their sealing and securing devices by hose testing.

2.4.3.2.6 During survey, the thorough examination of scuppers, bottom, side and watertight bulkhead valves shall be carried out. The bottom, side and watertight bulkhead valves located below the waterline shall be tested by hydraulic pressure during the ship docking (refer to 2.4.6.4 and 2.5).

2.4.3.2.7 When assessing the technical condition of metal closures, the wear standards for hull structures shall be considered (refer to 5.12 of Part I "General Provisions"; Appendix 5.2-1, 6.3.2.3.11 of Part III "Additional Surveys of Ships Depending on their Purpose and Hull Material"; 4.2.7 of Annex 2 to these Rules).

The application of damaged or rotten wooden hatch covers is not permitted, as well as of hatch tarpaulins where damaged or rotten.

2.4.3.2.8 The application of metal hatch covers, doors of bow, side and after openings in hull, bow and stern visor doors for loading vehicles, which tightness is ensured by means

of rubber or other sealing and securing devices, scuttles, watertight doors in superstructures, deckhouses, engine room trunks and bulkheads is not permitted in case of incomplete tightness, defects of sealing, closing devices and distortion of closures.

2.4.3.2.9 Small hatch covers on the fore deck (IACS UR S26).

2.4.3.2.9.1 The term "small hatch covers on the fore deck" in the context of this Chapter means hatch covers of 2,5 m^2 and less in area located on the exposed fore deck of a ship within 0,25*L* from the fore perpendicular.

2.4.3.2.9.2 The present requirements apply to:

.1 all ship types of length 80 m and more contracted for construction on or after 1 January 2004, built in non-compliance with the Rules for the Classification and Construction of Sea-Going Ships, 2005, and not meeting IACS UR S26, where the height of the exposed deck in way of the hatch is less than 0,1L or 22 m above the summer waterline, whichever is the lesser;

.2 bulk carriers, ore carriers, combination carriers (as defined in 2.2.7, Part I "General Provisions" of these Rules) and general dry cargo ships (excluding container ships, ro-ro ships and woodchip carriers) of length 100 m and more contracted for construction prior to 1 January 2004 and not meeting IACS UR S26, where hatches give access to spaces forward of the collision bulkhead, and to spaces, which extend over this line aftwards.

2.4.3.2.9.3 Small hatches on the exposed fore deck, except hatches designed for emergency escape, shall be subject to verification for compliance with the requirements of 7.7.2, Part III "Equipment, Arrangements and Outfit" of the Rules for the Classification and Construction of Sea-Going Ships. (The requirement does not apply to **CSR** ships).

2.4.3.2.9.4 Small hatches on the exposed fore deck of the ship, which are designed for emergency escape, shall be subject to verification for compliance with the requirements of 7.7.2.5, Part III "Equipment, Arrangements and Outfit" of the Rules for the Classification and Construction of Sea-Going Ships. (The requirement does not apply to **CSR** ships).

2.4.3.3 Rudder and steering gear.

2.4.3.3.1 The summarized extent of checks (tests) for the rudder and steering gear during survey of the ship is given in Table 2.1.1-1 of Part II "Survey Schedule and Scope".

2.4.3.3.2 The requirements for survey of rudder and steering gear are specified in 2.5.7.4 and 2.5.8 (as applicable).

2.4.3.3.3 During survey of the ship, the rudder and steering gear shall be operationally tested with the main and auxiliary steering gear, and with the emergency steering gear. Rudder stops and steering nozzle stops are subject to external examination.

The rudder and steering gear operation by the main steering gear shall be checked at the deepest seagoing draught and full ahead speed, as well as medium astern speed. If testing at the deepest seagoing draught is not possible, alternative testing conditions subject to agreement with the Register may be used. The rudder and steering gear operation by the auxiliary steering gear shall be checked at the deepest seagoing draught and ahead speed equal to half the ship maximum ahead service speed, but not less than 7 knots. During these tests the turning time and helm angles for rudder or steering nozzle shall be checked, as well as correct readings of the rudder or steering nozzle angle indicators and the absence of rudder or steering nozzle blade drift when they are kept in hard-over position at either side.

The survey of the rudder stock, rudder blade, rudder and steering gear bearings and joints without dismantling may be allowed under the following conditions:

rudder and steering gear design permitting for bearing clearance measurements and bearing examination. In this case, partial dismantling may be necessary (removal of covers, small hatches, etc.);

the surveyor reserving the right to require units to be opened up, rudder blade pressurization and other additional operations if doubts arise as a result of the survey, concerning the unit condition assessment;

the design of pintle corrosion protection permits checking its technical condition;

rudder stocks and pintles were not manufactured and repaired using build-up welding;

otherwise they shall be subject to periodical survey in not more than 5 years with mandatory flaw inspection of the built-up area.

Parts of suspended rudder joints with rudder stock are subject to a thorough examination during each special survey of the rudder and steering gear in dock.

During all types of checking of the rudder and steering gear underway, the rudder or steering nozzle shall be fully submerged.

2.4.3.3.4 When repairing or replacing the plating of profile rudders and steering nozzles, they shall be tested for tightness.

2.4.3.3.5 When assessing the technical condition of the rudder and steering gear during survey, the following shall be considered:

average wear of plating of the rudder blade, steering and fixed nozzles shall not exceed 1/4 of the as-built thickness;

stressed parts (including chains and steering-line rods) with the average wear 1/10 of the as-built thickness or diameter and above, as well as those having cracks or residual deformations are not permitted for application;

steel rope of the steering gear system shall be replaced if the number of broken wires is 1/10 of their total number or above at any point of its length equal to eight times the diameter, and if the rope is excessively deformed.

Reduction of the rudder stock, pintles and rudder axle diameter to values below those stipulated by the Rules for the Classification and Construction of Sea-Going Ships is not permitted.

Permissible clearances for the supporting units of the rudder shall be in each case established considering their as-built thickness and joint design.

Where the rudder stock is twisted by 58 or more, its application may be only permitted subject to annealing and to sector or tiller transplantation to a new key. If twisted by 158 or more, and if cracks are found, the rudder stock shall be replaced.

Foundations of steering gear drives shall be replaced if their elements are worn 20 % of the as-built thickness and more.

2.4.3.4 Anchor arrangement.

2.4.3.4.1 The summarized extent of checks (tests) of the anchor arrangement during special survey of the ship is given in Table 2.1.1-1 of Part II "Survey Schedule and Scope".

2.4.3.4.2 Anchors and hawse pipes, chain cables and wire ropes, stoppers and devices for releasing the inboard end of chain cable shall be thoroughly examined. Means for drainage of the chain lockers shall be operationally tested. Anchor chains shall be rolled from the chain locker, cleaned and arranged for examination, anchors shall be also cleaned and laid down for examination. Anchors and anchor chains shall be checked for completeness.

2.4.3.4.3 During survey of the ship, the anchor arrangement shall be operationally tested, and the anchor-hoisting speed shall be checked. Besides, the operation of stoppers and the device for releasing the inboard end of chain cable shall be checked.

2.4.3.4.4 Operational testing of the anchor arrangement shall be carried out by dropping and hoisting of anchors at a depth of not less than 40 m. However where the maximum depth in the ship's restricted area of navigation is less than 40 m, the testing may be carried out at the maximum depth.

2.4.3.4.5 When checking the spare parts of the anchor arrangement, the requirement for providing the third (spare) anchor on board may be omitted.

2.4.3.4.6 Starting with the second special survey, anchors, anchor chain cables and ropes shall be subjected to fault detection with respect to absence of cracks, residual deformations, excessive clearance and wear. Fault detection methods for anchors, anchor chain cables and ropes, their parameters to be gauged as well as criteria for assessing their technical condition in service are given in Annex 50 to the Guidelines. Where cracks and

residual deformations exist as well as the gauged parameters exceed allowable limits the affected anchors, chain cables and ropes shall be replaced or repaired in compliance with the procedure approved by the Register.

2.4.3.5 Mooring arrangement.

2.4.3.5.1 At special survey of the ship, the machinery, systems, electrical equipment forming part of the mooring arrangement shall be thoroughly examined and operationally tested.

2.4.3.5.2 During survey, bollards, hawse pipes, fairleads, ropes and other equipment shall be externally examined.

2.4.3.5.3 When assessing the technical condition of the mooring arrangement, the following shall be considered:

a steel mooring rope shall be replaced if the number of broken wires is 1/10 and more of their total number at any point of its length equal to eight times the diameter, or if the wire diameter is reduced by 40 % and more as compared to the initial value as a result of the surface wear or corrosion, as well as when the rope is excessively deformed;

fibre ropes and synthetic ropes shall be replaced if their yarns are torn, the ropes are rotten, excessively worn or deformed;

rollers of fairleads, guide rollers, bollards, hawse pipes and warping drums shall be free of excessive wear, scores or other damages.

Foundations of mooring arrangement drives shall be replaced if their elements are worn 20 % of the as-built thickness and more.

The total corrosion addition for both sides of the hull supporting structure of the mooring appliance shall be not more than 2 mm in compliance with 4.3.5, Part III "Equipment, Arrangements and Outfit" of the Rules for the Classification and Construction of Sea-Going Ships for all ships, except those specified in the IACS Common Structural Rules.

2.4.3.6 Towing arrangement.

2.4.3.6.1 The summarized extent of checks for the towing arrangement during special survey of the ship is given in Table 2.1.1-1 of Part II "Survey Schedule and Scope".

2.4.3.6.2 During survey, the machinery, systems, electrical equipment forming part of the towing arrangement shall be thoroughly examined and operationally tested.

2.4.3.6.3 Tow lines, towing equipment (including bollards, towing bitts, fairleads, chocks, stoppers and associated supporting structures) shall be subject to thorough examination. Marking of shipboard fittings for towing with the value of the safe towing load (*TOW*) and, in applicable cases, the safe working load (*SWL*) shall be checked.

On tugs, in addition to the above, tow hooks complete with their remote controls and overload protection devices, towing rails, towing arches, rope stoppers and the fastenings for securing these parts to the hull shall be subject to thorough examination. The remote controls of the tow hook shall be operationally tested.

2.4.3.6.4 Towing winch emergency release systems.

2.4.3.6.4.1 These requirements apply to survey of towing winch emergency release systems installed on tugs in accordance with the requirements of 6.6, Part IX "Machinery" of the Rules for the Classification and Construction of Sea-Going Ships.

2.4.3.6.4.2 Scope of survey of towing winch emergency release system consists of the scope of annual survey considering the below-mentioned as well as additional documented instructions for special surveys provided by the manufacturer and agreed by the Register. Availability of the instruction on board the ship as well as documentation containing performance capabilities and operating instructions of the system shall be verified prior to the commencement of the survey.

2.4.3.6.4.3 The full functionality of the towing winch emergency release system shall be operationally tested to the satisfaction of the RS surveyor. Testing is conducted either during a bollard pull test or by applying the tow line load against a strong point on the deck of the tug or the shore that is certified to the appropriate load.

2.4.3.6.4.4 The emergency release system shall be tested at a tow line load that is equal to at least the lesser of 30 % of the maximum design load or 80 % of the ship's bollard pull in both a normal power condition and power blackout condition to the satisfaction of the RS surveyor.

2.4.3.6.5 Emergency towing arrangement for oil tankers, oil tankers (> 60 °C), combination carriers, gas carriers and chemical tankers of 20000 t deadweight and more consisting of pick-up gear, towing pennants, chafing gear, fairleads, strong points and roller pedestals shall be thoroughly examined during the survey and operationally tested, where practicable.

2.4.3.6.6 In the assessment of the technical condition of the towing arrangement, the following shall be considered:

a steel towline shall be replaced if the number of broken wires is 1/10 and more of their total number at any point of its length equal to eight times the diameter, as well as where the tow line is excessively deformed;

regarding the chafing gear forming part of the emergency towing arrangement for the ships, specified in 2.4.3.6.5, the standards for anchor chain wear and defects specified in Annex 50 to the Guidelines shall be met;

a fibre rope shall be replaced if its yarns are broken, the rope is rotten, has excessively worn or deformed;

hooks, bollards, towing bitts and hawse pipes shall be free of excessive wear, scores or other damages.

Foundations of towing arrangement drives shall be replaced if their elements are worn 20 % of the as-built thickness and more.

2.4.3.7 Signal masts.

2.4.3.7.1 During survey of the ship, signal masts and their rigging shall be thoroughly examined.

2.4.3.7.2 When assessing the technical condition of signal masts and their rigging, the following shall be considered:

average wear of steel mast plates shall not exceed 1/5 of the as-built thickness;

wooden masts shall be replaced if rotten by 1/10 and more of their cross-sectional area;

application of stressed components having an average wear of 1/10 and more of their as-built thickness or diameter is not permitted;

a steel rope shall be replaced if the number of broken wires is 1/10 and more of their total number at any point of its length equal to eight times the diameter, as well as where the rope is excessively worn or deformed.

2.4.3.8 Equipment of bulk cargo holds.

2.4.3.8.1 Fixed equipment for bulk cargo separation shall be thoroughly examined during each special survey of the ship.

2.4.3.8.2 Aboard ships designed or adapted for bulk cargo carriage, the availability shall be checked of an approved bulk cargo loading plan and Stability Booklet; besides, the technical condition of fixed equipment for bulk cargo separation (bulkheads, feeders, arrangements for their securing to the ship structures) shall be assessed.

2.4.3.8.3 When assessing the technical condition of fixed equipment, the wear and damage standards relating to the ship's hull structures shall be applied (refer to 2.4.2.9).

2.4.3.9 Emergency outfit.

At special survey of the ship, emergency outfit shall be externally examined and checked for completeness in accordance with the ship's list of emergency outfit.

2.4.3.10 Cargo securing devices.

At special survey of a ship, cargo securing devices including the securing equipment for containers on container ships and ships adapted for the carriage of containers, shall be surveyed in accordance with the Guidelines on Survey of a Ship for Compliance of Cargo Securing Devices with the Cargo Securing Manual.

2.4.4 Fire protection.

2.4.4.1 General.

2.4.4.1.1 Special survey of fire protection is carried out at 5-year intervals to be determined from the date of the previous special (or initial) survey. The Register may reduce this period in view of the technical condition deterioration or due to other reasons.

2.4.4.1.2 The requirements of this Section apply to the fire protection items, which purpose and design are regulated by the Rules for Construction.

2.4.4.1.3 New items of fire protection shall be installed on ships in compliance with the approved technical documentation and under the Register technical supervision. For new items the documents shall be submitted as stipulated by RTSCS.

2.4.4.1.4 After repair and installation of new items of fire protection on ships, the tests shall be conducted as stipulated for their manufacture and installation onboard. Tests shall be conducted in compliance with RTSCS followed by issue of the relevant documents.

After repair of fire extinguishing systems, the hydraulic tests of repaired items shall be conducted (piping and fittings for cylinders, reservoirs or tanks) and for the aerosol fire extinguishing systems tests shall be conducted by means of simulating the actuation of the system with the fire extinguishing aerosol generators being switched off.

Cylinders, reservoirs, piping and fitting of the carbon dioxide smothering system, freon extinguishing, foam extinguishing under pressure, hydropneumatic tanks of sprinkler system shall be subject to hydraulic testing starting from the second special survey and then after two intervals between special surveys.

Necessity of internal surveys and hydraulic testing of tanks for storage of freons 114B2 is determined starting from the third special survey upon the results of external examination and measurement of the tank wall thickness.

2.4.4.1.5 During survey, the fire protection items shall be prepared for survey with access, opening-up or dismantling. At special surveys, starting from the third special survey, the pipeline of the water fire main shall be tested by hydraulic pressure equal to 1,5 times the maximum working pressure of the system but not less than 1,0 MPa with mandatory removal of insulation materials from all sections where they are fitted. At the surveyor's request all required drawings, descriptions, diagrams, files and passports shall be submitted.

2.4.4.1.6 During survey it shall be verified whether the list of fire protection items, their completeness, structure, arrangement and installation, as well as specified characteristics comply with the requirements of the Rules for Construction. The technical condition of items shall be assessed in order to find out possible defects.

2.4.4.2 Structural fire protection.

During examination of the structural fire protection, the condition of insulation of fire-resistant and fire-retarding divisions and closures of openings therein shall be checked; where necessary, certain areas of cladding and insulation may be opened up.

The serviceability of closures including those with remote drive, fire doors, trunks, ventilation ducts, annular spaces of stacks, skylights and other openings in cargo and machinery spaces, in the pump rooms, as well as their drives, shall be checked.

During examination attention shall be paid to the fact whether the relevant structural, insulating, finishing and coating materials are applied in order to use non-combustible, not readily ignitable, low flame-spread materials, which are not hazardous as regards generation of excessive quantities of smoke, toxic and explosive products.

2.4.4.3 Fire extinguishing systems.

2.4.4.3.1 During survey and operational testing of fire extinguishing systems their readiness for immediate use, serviceability and retaining of their rated capacity shall be checked.

2.4.4.3.2 When water fire main system is operationally tested, serviceability of the remote starting of fire pumps, as well as emergency fire pump together with its sea chest shall be checked. When a portable motor pump is used as an emergency fire pump on ships

built prior to 1 September 1984, then instructions of 2.4.4.4.2, Part II "Carrying Out Classification Surveys of Ships" of the Guidelines shall be taken into consideration during its survey.

2.4.4.3.3 During operational testing of sprinkler system, actuation of control valves (by means of opening-up the sprinkler or control branch pipe), emergency alarm, operation of devices for automatic pressure maintenance and water level control in the pressure tank, as well as automatic starting of pumps and compressors shall be checked.

The pressure tank shall be examined externally and internally. The internal examination shall be carried out at each special survey of the ship starting from the second one.

2.4.4.3.4 When water-screen system is operationally tested, the remote start-up shall be checked.

2.4.4.3.5 When foam extinguishing system is operationally tested, serviceability of the remote opening of sea chest valve shall be checked.

Availability of the required foam concentrate quantity shall be checked. The quality of foam concentrate and foam expansion ratio shall be confirmed by the document of the competent body. For additional instructions on the survey of foam concentrate, refer to 2.2.4.2.2, Part II "Carrying Out Classification Surveys of Ships" of the Guidelines.

2.4.4.3.6 When water-spraying system is operationally tested, serviceability of the remote control of shut-off valves and automatic actuation of the pump by the pressure drop in the system shall be checked.

2.4.4.3.7 The steam smothering system is operationally tested by trial discharge of steam into protected spaces.

2.4.4.3.8 During survey of the inert gas systems, the non-return valves and flame arresters on piping supplying gas to compartments of tankers shall be examined. When the system is operationally tested by trial release of gas into protected spaces, serviceability of starting devices and automatic gas control devices with visual and audible alarm shall be checked.

2.4.4.3.9 When surveying the fire extinguishing system using freon 114B2, freon storage tanks shall be internally surveyed in the following cases:

if the results of the freon quality check indicate the necessity of its replacement by a new one (or regenerated);

after intended use of freon or after freon release from the tanks. The quality of freon shall be confirmed by the document issued by the competent body;

after detection of partial or full freon leakage;

during repair of tanks.

Availability of the required freon quantity shall be checked. The freon quality shall be confirmed by the documents of the competent body. The system shall be operationally tested by discharge of compressed air instead of freon. Beginning from the third survey upon results of the external examination and tank thickness measurement it is necessary to make a decision on necessity of the internal survey and hydraulic tests.

At survey of the systems using freon 1301 (13B1), the cylinders shall be checked for leakage (based on the readings of pressure indicators fitted on each cylinder).

For instructions on survey of cylinders for storage of freon 114B2, as well as freons 1211 (12B1) and 1301 (13B1), refer to 2.4.4.4.1, Part II "Carrying Out Classification Surveys of Ships" of the Guidelines.

2.4.4.3.10 When surveying carbon dioxide smothering system, the valves of carbon dioxide cylinders shall be examined together with their safety devices and control appliances indicating the actuation of safety devices, performance of audible device signalling about the damage of safety membranes, devices for individual, group and remote opening of cylinder valves.

When examining the cylinders, presence of carbon dioxide therein shall be checked according to the weighing report (or measurement by any other approved procedure)

submitted by the ship's officers. The total carbon dioxide quantity shall not be less than 0,9 of the design value, at that the quantity of carbon dioxide in each cylinder may be increased by not more than 0,5 kg.

The system may be operationally tested by discharge of compressed air instead of carbon dioxide.

At least 10 % of all high pressure carbon dioxide cylinders shall be subjected to hydraulic testing starting from the second special survey and then after two intervals between special surveys having regard that the maximum interval between hydraulic tests shall not exceed 10 years. If one or more carbon dioxide cylinders fail, a total of 50 % of the onboard cylinders shall be subject to hydraulic tests. Flexible hoses shall be replaced at intervals recommended by the manufacturer and not exceeding 10 years, except for bellows-type flexible metal hoses. Bellows-type flexible metal hoses shall be subject to annual visual examination and when required upon examination results, replaced.

When surveying the cylinders, internal survey and hydraulic testing dates shall be assigned in the following way: for cylinders that have undergone hydraulic tests at the recognised test station (10 %), on the basis of stamps of these test station and for cylinders that have not undergone hydraulic tests (90 %), on the basis of the previous Register survey reports.

In well-grounded cases and depending on the service life, survey results, repairs and replacements effected, checking of the safety valves of low-pressure carbon dioxide smothering system tank may be required, as well as heat insulation in compliance with the requirements of 3.8.3.6, Part VI "Fire Protection" of the Rules for the Classification and Construction of Sea-Going Ships.

The tanks of low-pressure carbon dioxide smothering system shall be subjected to the internal survey after repair and after discharge of the carbon dioxide if the tank is older than 5 years.

Hydraulic testing of the tank may be requested by the surveyor based on the internal survey results. At that, the surface under heat insulation shall be checked at random for corrosion. Where necessary, insulation removal shall be carried out according to the procedure recommended by the tank manufacturer.

Aboard ship the availability of the ship's maintenance plan for carbon dioxide smothering systems shall be checked. Maintenance of carbon dioxide smothering systems in accordance with the ship's maintenance plan shall be performed by the organizations (firms) recognized by the Register at least once every two years (at intervals 2 years + 3 months) on passenger ships or at each special survey on cargo ships.

Hydraulic tests, maintenance works and etc. may be carried out by the organizations recognized by ACS — IACS member (taking into account Section 7, Part I "General Provisions" of these Rules).

2.4.4.3.11 During survey of the aerosol fire extinguishing system, the latter shall be tested by means of simulating its actuation with the fire extinguishing aerosol generators being cut out of the starting circuits. Special simulators shall be connected during the tests instead of generators.

Subject to monitoring are:

visual and audible indication on the remote control device (RCD);

delay time of starting and simulation of generators' starting;

disconnection of ventilation in the protected space;

alarm actuation in the protected space;

cable insulation resistance;

arrangement and external view of generators.

Resistance of the aerosol fire extinguishing system shall be checked to false activation through connection of a special starting unit simulator to each starting circuit, and this being done, the generator shall be cut out of the starting circuit.

As far as practicable, the tests shall be carried out with all electric power consumers being under working conditions.

Fire extinguishing aerosol generators shall be surveyed considering the number of generators limited by a manufacturer for testing and dates of checking of their fitness by the competent bodies (or accredited laboratories) or dates of generators' replacement by new generators established by the manufacturer.

2.4.4.3.12 When surveying the dry powder system, reservoirs for storage of powder shall be subjected to internal survey starting from the second special survey.

Quantity of powder in reservoirs shall be confirmed by the relevant report.

The system shall be operationally tested by compressed air.

During examination of the cylinders, presence of carrier gas shall be checked according to the weighing report (or according to measurement by any other approved procedure) submitted by the ship's officers. Quantity of carrier gas shall not be less than that required for single powder discharge from reservoir.

2.4.4.4 Fire detection and alarm systems.

Fire detection and alarm systems and alarms intended to warn of fire smothering systems being activated shall be operationally tested and externally examined to determine serviceability of the automatic fire detection and alarm system in case of heat, light or smoke detectors' operation in the protected space, to determine serviceability of manual fire alarms in case of the detectors' operation in protected spaces and on decks, serviceability of fire warning system (alarm system) and that of audible and visual alarms intended to warn of the fire smothering system being activated in protected spaces and of its interlocking with the manual and remote starting of the fire extinguishing system.

2.4.4.5 Fire-fighting outfit. Spare parts and tools.

2.4.4.5.1 During survey of fire-fighting outfit, motor pumps shall be operationally tested.

2.4.4.5.2 The completeness of fire-fighting outfit, spare parts and tools shall be checked, and they shall be externally examined; besides, compliance with schedule of mandatory periodical checks of instruments, self-contained breathing apparatuses and fire extinguishers shall be verified. Availability of documentation (RS certificates, refer to 4.5, Part I "General Provisions" of these Rules) for the elements of the fireman outfit (protective clothing, breathing apparatus, safety lantern, safety rope, etc.) shall be checked. For additional instructions on survey of self-contained breathing apparatuses, refer to 2.2.4.2.3, Part II "Carrying Out Classification Surveys of Ships" of the Guidelines.

The completeness of emergency breathing apparatuses, their expiry dates and availability of the RS certificates for these apparatuses shall be checked (refer to 4.5, Part I "General Provisions" of these Rules).

2.4.4.5.3 All fire hoses shall be subjected to hydraulic tests by the working pressure of the water fire main system. At survey of cabinets (boxes) for fire hoses, they shall be checked for structural integrity, drainage and corrosion. For additional instructions on survey of fire hoses and hose couplings and assessment of their condition, refer to 2.2.4.2.1, Part II "Carrying Out Classification Surveys of Ships" of the Guidelines.

2.4.5 Machinery installation.

2.4.5.1 General.

2.4.5.1.1 At special survey of the ship for renewal of class it is necessary to verify the compliance of machinery installation items with the requirements of the Rules for Construction and assess their technical condition.

2.4.5.1.2 The scope of special surveys of machinery installation items is determined in relation to the age of ship and technical condition of the machinery installation items considering the dates of opening-up and dismantling, determination of wear and clearances, operational testing and hydraulic tests specified in the technical documentation (maintenance manual) of machinery and arrangement manufacturers.

Extent of examinations and measurements prescribed by this Chapter and related openings-up, dismantling and disassembling may be changed by the surveyor in each case considering structure, service life, results of the previous survey, repairs and replacements made, as well the results of survey in accessible places and operational testing.

For ships less than 15 years of age and in the absence of manufacturer's recommendations, the in-place diagnostics of the internal combustion engine and auxiliary machinery approved by the Register, may be applied.

2.4.5.1.3 After completion of special survey of the ship, main machinery, shafting with auxiliary machinery and systems shall be tested in the presence of the surveyor during mooring and sea trials in order to check and confirm the characteristics required by the Rules.

Duration of testing is taken in accordance with Table 2.4.5.1.3.

If the main and auxiliary machinery, shafting, propellers, rudder and steering gear are repaired during the time preceding special survey of the ship or during the special survey, the scope and duration of testing is determined taking into consideration the extent and nature of the repair made.

If the extent of repairs made, is considered by the surveyor to have any impact on response characteristics of the propulsion systems, then the scope of sea trial shall also include a test plan for astern response characteristics based on those required for such an equipment or systems when fitted to the new ship.

The tests shall demonstrate the satisfactory operation of the equipment or system under realistic service conditions at least over the manoeuvring range of the propulsion plant, for both ahead and astern directions.

Depending on the actual extent of the repair, the surveyor may accept a reduction of the test plan.

If modifications specified in Section 6 of the Guidelines on Technical Supervision of Ships under Construction have been carried out during special survey of shafting, the torsional vibration measurements shall be made during sea trials according to the program approved by the Register.

Sea trials shall be preceded by mooring trials. The program of mooring and sea trials with operating regimes and duration of trials shall be submitted to the surveyor for approval. Sea trials performed for the purpose of operational testing of the main machinery, shafting, propellers and steering gear may be substituted by tests using simulation methods and facilities, or mooring trials if they can ensure check of performance of the said machinery and devices in operating regimes and ensure loading of the main machinery, shafting and propellers corresponding to that applied in operating regimes. Procedures and programs of such tests shall be submitted for review and approval to the RS representation in charge of the technical supervision of ships, aboard which such tests shall be carried out.

Mooring, simulation or sea trials shall be carried out according to the RS-approved program and under the technical supervision of the RS surveyor.

In well-grounded cases in absence of remarks upon the results of mooring trials, the shipowner is permitted to run sea trials concurrently with a voyage. At that, the shipowner shall notify the RS Branch Office of their results within one day after completion of the trials and if failures of tested items are detected the shipowner shall guarantee that these items are submitted to the Register prior to the ship departure from the first port of call after testing

Upon completion of sea trials the inspection of particular units and components shall be carried out, the necessity and extent of the inspection shall be determined by the surveyor. The necessity of control tests and their duration after the inspection shall be determined by the surveyor.

Table 2.4.5.1.3

Power, in kW	Duration of testing, in h
Internal combustion engines:	
not more than 750	3
751 — 2250	5
more than 2250	7
Turbines:	
not more than 2200	5
2201 — 5880	7
5881 — 11025	10
more than 11025	12
Notes: 1. Duration of testing during sea trials may be changed by the surveyor based on the machinery technical condition. 2. Total duration of testing includes the time necessary for different load testing, including reverse and the minimum stable speed (for internal combustion engines), at that the full load conditions (not less than 90 % of rated power) shall not be less than 70 % of the total duration of testing. 3. The time necessary for the machinery warming-up is not included in the total duration of testing. 4. When during mooring trials the load of main machinery corresponding to the operating regimes (CPP, propeller discharge nozzle, electrical motion) may be provided, inspection of main machinery during sea trials may be omitted. 5. In case of the emergency stop during testing, the continuation or repeating of the testing regime is decided by the surveyor based on the nature and cause of emergency stop in each case. 6. Upon completion of sea trials the inspection of particular units and components shall be carried out, the necessity and extent of the inspection shall be determined by the surveyor. The necessity of control tests and their duration after the inspection shall be determined by the surveyor.	

2.4.5.1.4 The technical condition of the machinery installation items shall be assessed based on the survey results using previous survey reports and information on in-service wear, damage, failures, repairs and replacements indicated in the ship's documentation (maintenance records, ship protocols, machinery logs, etc.).

2.4.5.1.5 Permissible wear limits for machinery, units and components shall be determined using data contained in the manufacturer's instructions and data cards and in the normative documents developed by design offices and R&D organizations and approved by the Register.

2.4.5.1.6 Based on measured data, the vibrations of main and auxiliary machinery and shafting shall be assessed in accordance with the vibration standards specified in Section 18 of the Guidelines on Technical Supervision of Ships under Construction.

2.4.5.1.7 If wear, damages or failures exceeding permissible limits or dangerous for the ship's operation were revealed during the survey of machinery installation items, these items shall be recognized as not complying with the RS requirements until the defects are eliminated.

2.4.5.1.8 Survey of machinery installation/machinery may be carried out on a PMS basis in accordance with 2.7.

2.4.5.1.9 Survey of machinery installation/machinery may be carried out on a CM/CBM basis in accordance with 2.8.

2.4.5.2 Internal combustion engines. Steam engines.

2.4.5.2.1 Internal combustion engines.

2.4.5.2.1.1 Special survey covers the survey of main and auxiliary engines with their manoeuvring and starting devices, auxiliary machinery and equipment driven by main engine, transmissions, couplings, dampers and antivibrators, as well as main and auxiliary steam piston machinery with its manoeuvring devices and drive gear.

2.4.5.2.1.2 At special survey, internal combustion engines complete with transmissions, couplings and reduction gear, manoeuvring, starting, shaft-turning gear, auxiliary engine-driven machinery and equipment shall be submitted for thorough examination with opening-up as necessary and with dismantling of all units and components of the above mentioned items of machinery installation with consideration of the manufacturers' recommendations.

2.4.5.2.1.3 The following components and units of the main engine are surveyed:

bed plate, columns, crankcase, tie rods, reamed bolts and chocks;
engine mounting, cylinder block, cylinder covers;
cylinder liners, pistons, piston rods;
crossheads with pins and sliders, guides;
connecting-rods, gudgeon pins, telescopic system;
crosshead, top-end, bottom-end, main bearings with their bolts and pins;
thrust bearing integral with the engine;
connecting rods and journals;
crankshaft webs, pins for fixing balance weights on crank webs;
distributing devices, including camshafts;
cams on camshafts;
bearings, valve drives, suction, exhaust and starting-air valves;
camshaft drives (gearing and chain gear);
safety valves (check of adjustment);
lubricators, manoeuvring and starting devices;
speed governor and overspeed device;
auxiliary machinery driven by main engine;
shaft-turning gear, torsional vibration damper and antivibrator;
exhaust-gas turbosuperchargers, supercharger intercooler.

In case of medium-speed diesels, the dismantling of main and bottom-end bearings and their replacement during special survey may be postponed until the end of the bearings life, as stated in the technical documentation of the diesel manufacturer. The survey scope for the auxiliary engine components and units shall be determined in accordance with the applicable provisions of the this Chapter.

Instructions on survey of components and units of internal combustion engines are set forth in 2.4.5.4.1, Part II "Carrying Out Classification Surveys of Ships" of the Guidelines.

2.4.5.2.1.4 To be submitted to the surveyor during the survey are the measured data and the results of assessing the wear of cylinder liners, pistons, sliders and guides (parallels), crosshead pins (gudgeon pins), connecting rods and journals, crosshead (bottom-end), crank, journal and thrust bearings, camshafts, their components and drives. If found necessary, the surveyor may require for other components and units to be measured and their wear to be determined. To be submitted to the surveyor are crank-web clearance measurement data, which shall not exceed the standards contained in the technical documentation of engine manufacturers, crankshaft-dropping measurement data and data on the length measurement of bottom-end and crosshead bearing bolts. Where auxiliary internal combustion engines are concerned, measurements of this kind, wear assessment and crank-web clearance determination shall be carried out based on the engine design and at the surveyor's request, as well as in case of scheduled repairs and when the dates are due that are stated in the maintenance manuals and technical documentation of engine manufacturers.

Condition of the viscous dampers shall be checked by analysis of liquid samples or thermal nondestructive testing or measurements of torsional vibrations in terms corresponding to the service life assigned by the damper manufacturer or residual service life found according to instruction (refer to 2.4.5.4.1.9, Part II "Carrying Out Classification Surveys of Ships" of the Guidelines and Annex 38 to the Guidelines).

For low-speed engines with the number of revolutions < 250 min^{-1} the measurements of connecting rod bolts may be omitted. In this case, relevant documents shall be demonstrated to the effect that all preventive and scheduled routine maintenance prescribed by the operation manual and the Rules for the Technical Operation has been carried out within the specified time. Another reason may be that the engines have been found in good working order as a result of control tests. Connecting rod bolts of four-stroke internal combustion engines shall be checked for residual elongation (if any) and by means of flaw inspection, as well as the engine running hours shall be monitored as stated in the maintenance manuals and technical documentation of engine manufacturers.

Scheduled maintenance of mechanical dampers shall be performed for assessment of their technical condition (elements, components, springs). In case of expiration of the service life specified by the damper manufacturer, the damping elements shall be replaced or their effectiveness shall be verified by the method agreed with the Register, or the damper shall be replaced by a new one.

2.4.5.2.1.5 When special survey is completed and the deficiencies found are eliminated, the engines shall be submitted for an operational testing. At special survey, main engines shall be submitted for operational testing in the course of sea trials, taking into account the conditions stipulated under 2.4.5.1.3.

2.4.5.2.1.6 The engines shall be operationally tested complete with couplings and reduction gear, manoeuvring, starting and protecting devices, service pumps and compressors (including standby ones), heat exchangers, pressure vessels, systems, piping and equipment.

For ships equipped with composite (hybrid) propulsive systems (including ships assigned the distinguishing mark **CPS** in the class notation) combined operation of engine and propulsion motor driving a common propeller shall be checked. In addition, engine starting by propulsion motor (where provided) shall be checked.

2.4.5.2.1.7 When main engines are operationally tested, their principal service characteristics shall be checked including speed, maximum combustion pressure and compression pressure (for prescribed conditions), exhaust gas temperature, lubricating oil and cooling water pressure, lubricating oil and cooling water temperature, etc.

Where necessary, the surveyor may require for main engine power to be determined during the sea trials. Cylinder load control is recommended. Reversing gear and reversing time shall be checked. Engines operating via reverse-reduction gear, hydraulic and electromagnetic couplings shall be operationally tested together with the above machinery, and with the reversing gear working as well.

2.4.5.2.1.8 The limit switches of engines driving propellers via reverse-reduction gear, hydraulic couplings of CPP-driving engines, as well as of the engines of main and auxiliary generators, shall be checked for tripping.

2.4.5.2.1.9 The protection and alarm systems of engines shall be checked while the engines are tested. This check may be carried out by simulating the conditions, under which the protection and signalling devices are activated.

2.4.5.2.1.10 The starting, shutdown, reversing and removing the conditions of remotely controlled engines shall be checked from the local and remote control station. Simultaneously, the operation of the interlocking between the local and remote control station, the work of instruments and the transition of control functions from one station to another shall be checked. The operation of the interlocking shall be checked under conditions of the shaft-turning gear being activated.

2.4.5.2.1.11 Engines with direct transmission to propellers shall be operationally tested at the minimum stable speed.

2.4.5.2.1.12 When operationally tested, auxiliary engines shall be tested in accordance with their purpose at specification speed and with other parameters as specified.

2.4.5.2.1.13 The communication efficiency between the navigation bridge and main machinery control rooms shall be checked.

2.4.5.2.1.14 General provisions for assessing ICE technical condition are set forth in 2.4.5.1.4 — 2.4.5.1.6.

2.4.5.2.1.15 Repairs or replacement of engine units and components shall be carried out if the survey revealed defects and wear exceeding permissible limits.

Such defects include:

.1 damage to essential units or components:

cracks in engine components, such as bed plates and columns, cylinder blocks, cylinder covers, cylinder liners, pistons, crankshaft pins and webs, breaking of tie rods;

deformation (bending) of crankshafts, connecting rods, piston rods, camshafts;

melting, flaking, cracking and detaching of engine bearing linings;

pitting and damage to the gear teeth and pinions of camshaft drive, cam chipping of camshafts;

excessive elongation of connecting rod bolts (the residual deformation of the bolts exceeding permissible values);

.2 wear of essential units and components:

wear and galling of crank pins and journals, crosshead pins, camshaft necks;

ellipticity, pin and journal conicity beyond permissible standards, cam wear of camshafts;

piston and piston pin wear beyond permissible standards;

bearing wear, crosshead (connecting rod), crank, journal and thrust-bearing clearances beyond permissible standards, reduction of the lining thickness in bearings beyond permissible standards;

cylinder liner wear beyond permissible standards;

.3 defects of essential units and components:

crankshaft deflection and dropping values exceeding permissible standards stated in technical documentation;

insufficient tightness of connecting rod and journal fit in built and semi-built crankshafts, and of cam fit in camshafts;

leakage in cylinder liner seals;

incorrect adjoining of shaft pins in bearings, involving base-surface reduction for bearing inserts;

misalignment beyond permissible standards.

2.4.5.2.1.16 Engines do not comply with the RS requirements if the operational testing reveals the following:

excessive engine vibration;

abnormal hammering and noise in engines;

incorrect load distribution among cylinders;

abnormal heating of bearings;

lubricating oil and cooling water temperatures exceeding maximum permissible values stated in the engine manufacturers' instructions;

exhaust gas temperatures exceeding maximum permissible values stated in the engine manufacturers' instructions;

crankcase blow-by;

malfunction of manoeuvring and starting devices, speed governors, limit switches, fuel injection equipment and safety valves;

malfunction of auxiliary machinery servicing the engines and driven by them;

malfunction of indicating and measuring instrument.

The causes of the above malfunctions shall be found and the deficiencies shall be eliminated.

Where abnormally high engine vibration is found, its parameters shall be measured in order to be assessed on the basis of technical standards and in order measures for vibration reduction could be worked out and implemented.

When assessing the wear of units and components of internal combustion engines and determining permissible clearances for the units, technical documentation and manufacturers' machinery maintenance manuals shall be applied, as well as the approved standards.

2.4.5.2.2 Steam engines.

Requirements for survey of steam engines (main and auxiliary) are deleted from the present edition of the Rules.

When necessary to carry out survey of the steam engines, the RS Branch Office shall consult RHO.

2.4.5.3 Stem turbines. Gas turbines.

2.4.5.3.1 General.

2.4.5.3.1.1 Special survey includes survey of main steam turbines, steam turbines of main (electric) generators, auxiliary steam turbines, waste steam turbines, including manoeuvring gears, main gas turbine engines, gas turbines for gears of (electric) generators including combustion chambers and manoeuvring gears (hereinafter referred to as "steam turbines", "gas turbines").

2.4.5.3.1.2 Survey of gas turboblowers of internal combustion engines is included in the scope of ICE special survey (refer to 2.4.5.2.1.3).

2.4.5.3.1.3 At each special survey the shipowner shall submit to the surveyor a conclusion (protocol) prepared by a competent body on vibration measurement of main steam turbines, main gas turbine engines, which contains assessment of vibration characteristics. Vibration measurement may be carried out during ship service and it shall be performed regularly.

On the basis of conclusion about allowable vibration parameters and their compliance with existing standards, the shipowner's statement denying main machinery defects during the ship's service and entries in the ship's documentation, opening-up may be avoided of casings of main steam turbines and main gas turbine engines at this special surveys (if such works for machinery units and components inspection are not provided by the manufacturer's maintenance manuals for turbines and engines).

Based on the vibration measurement results and at the surveyor's request, casings of main turbines, main and auxiliary gas turbine engines shall be opened up for the survey of units and components of the said machinery.

Provisions of this paragraph also apply to steam turbines of main (electric) generators and gas turbines for driving gear of main (electric) generators.

2.4.5.3.1.4 General regulations for assessing technical condition of steam and gas turbines are set forth in 2.4.5.3.2 and 2.4.5.3.3.

2.4.5.3.2 Steam turbines.

2.4.5.3.2.1 In addition to the requirements set out in 2.4.5.3.1.3, at special survey, gas turbines together with couplings, reduction gear, manoeuvring and shaft turning gear shall be submitted to thorough examination with opening-up and dismantling of units and components, where necessary.

2.4.5.3.2.2 At special survey of steam turbines subject to opening-up and dismantling for examination of units and components (refer to 2.4.5.3.1.3 and 2.4.5.3.2.1 of this Chapter), the following components and units shall be surveyed: turbine casings, nozzle boxes, manoeuvring gear, guide vanes, diaphragms, seals, rotors with vanes and discs, rotor shafts with bearing journals, carrier and thrust bearings, safety devices and governors, shaft turning gear.

Survey scope for components and units of auxiliary steam turbines is determined in accordance with the applicable instructions of this paragraph and 2.4.5.3.1.3 of this Chapter.

Instructions and recommendations on survey of the above mentioned components and units are given in 2.4.5.5.1, Part II "Carrying Out Classification Surveys of Ships" of the Guidelines.

2.4.5.3.2.3 During the survey, clearance measurements of thrust and carrier bearings, assessment of rotor position, axial rotor float shall be submitted to the surveyor. Where necessary, the surveyor may require for measurements of other units and components to be carried out.

2.4.5.3.2.4 After special survey process is completed and defects detected during survey are eliminated, steam turbines shall be submitted for operational testing. Main steam turbines shall be submitted for operational testing during the ship sea trials (refer to 2.4.5.1.3).

2.4.5.3.2.5 Steam turbine operational testing is performed for reduction gears, manoeuvring gear, auxiliary machinery serving turbines (including back-up auxiliary machinery), heat exchangers, systems, piping and equipment.

2.4.5.3.2.6 When main steam turbines are operationally tested, their main working characteristics shall be checked including speed, working steam pressure and temperature, steam pressure at intermediate stages and steam extraction chambers in turbines, steam pressure in lining systems and underpressure in exhaustion chambers, underpressure in the main condenser, lubricating oil pressure in lubricating system, lubricating oil temperature before and after oil-cooler, axial position of rotors and heat expansion of turbine casings. Steam turbine protection and alarm systems shall be checked. This check may be carried out by simulation of activation conditions for protection and alarm devices.

2.4.5.3.2.7 Manoeuvring gear and shaft turning gear with blocking shall be operationally tested.

2.4.5.3.2.8 Astern turbines and reversing time shall be checked.

2.4.5.3.2.9 Communication efficiency between the navigating bridge and control rooms of main steam turbines shall be checked.

2.4.5.3.2.10 Repairs or replacement of units and components of steam turbines shall be carried out if the survey revealed defects and wear exceeding permissible limits.

Such defects include:

.1 damage to essential units and components:

cracks on turbine components such as casings, discs, working blades, diaphragms, nozzle boxes;

deformation, chipping, breakage of blades;

cracks and fractures of blade fastening bandings, rupture of connecting wires;

fusion, flaking, cracks, deterioration of antifriction lining of bearings;

failures of steam turbine control system (control valves, servomotors, governors) due to mechanical damages;

.2 wear of essential units and components:

erosion and corrosion of working blades;

wear, erosion and corrosion of nozzles;

wear, galling of working journals of steam turbine rotor shafts, ellipticity and conicity of journals exceeding allowable limits;

wear of bearings, reduction of antifriction lining thickness exceeding allowable limits, increase of bearing clearances exceeding allowable limits;

galling of hinge and lever joints of steam turbine control system, galling of governor components preventing control system normal operation;

.3 defects of essential units and components:

dropping and axial float (shift) of rotor shafts exceeding maximum allowable limits (values) specified in manufacturer's technical documentation and maintenance manuals for servicing of steam turbines;

loosening of fit of rotor discs;

weakening of working blades fastening;

incorrect adjoining of shaft journals to bearings;

non-tightness (gapping) in the splits of steam turbine casing.

2.4.5.3.2.11 Steam turbines do not comply with the RS requirements if the operational testing reveals the following:

excessive vibration of steam turbines and their reduction gear;

abnormal heating of bearings, abnormal lubricating oil temperature increase in comparison with the specified temperature parameters for bearings and lubricating oil;

defects in manoeuvring gear and steam turbine control system (control valves, servomotors, governors);

defects of indicating and measuring instruments.

Causes of these defects shall be detected and defects shall be eliminated.

If excessive vibration of steam turbines is detected, its parameters shall be measured for assessment against technical standards and for development and implementation of vibration reduction actions (refer also to 2.4.5.3.1.3).

2.4.5.3.2.12 Manufacturer's technical documentation and steam turbine maintenance manuals shall be used for wear assessment of steam turbine units and components, assessment of allowable axial and diametrical clearances of units, allowable values of rotor positions, their float.

2.4.5.3.3 Gas turbines.

2.4.5.3.3.1 In addition to the requirements of 2.4.5.3.1.3, at special survey gas turbines complete with couplings, reduction gear, manoeuvring and shaft turning gear shall be submitted for thorough examination with due opening up and dismantling of units and components. If effective means are available for condition assessment of gas turbines units and components without dismantling thereof, their opening up may be omitted.

Gas turbines subject to unit repairs shall not be opened up. Such turbines shall be surveyed during scheduled repairs at specialized plants.

2.4.5.3.3.2 During special surveys of gas turbines subject to opening up and dismantling for examination of units and components, the following parts and units shall be surveyed: turbine and compressor casings, guide vanes and turbine and compressor seals, rotors of turbines and compressors with blades and discs, rotor shafts of turbines and compressors including shaft journals, carrier and thrust bearings of turbines and compressors, chambers of turbine water cooling, nozzle apparatuses, diaphragms, combustion chambers with flame tubes, reversing devices (if any), gas turbine frames, manoeuvring gear, manoeuvring valves, shaft turning gear, as well as safety devices and governors.

Instructions and recommendations on performance of surveys of the above mentioned components and units of gas turbines are set forth in 2.4.5.5.2, Part II "Carrying Out Classification Surveys of Ships" of the Guidelines.

2.4.5.3.3.3 During the survey the following shall be submitted to the surveyor: measurement results and wear assessment of rotor shaft working journals of turbine and compressor, carrier and thrust bearing clearances, assessment of rotor position and rotor axial float. If necessary, the surveyor may require for measurements of other units and components to be carried out.

2.4.5.3.3.4 After special survey is completed and defects detected during the survey are eliminated, gas turbines shall be submitted for operational testing. Main gas turbo engine and gas turbines of main (electric) generators shall be submitted for operational testing during the ship sea trials (refer to 2.4.5.1.3).

2.4.5.3.3.5 Gas turbines are operationally tested together with reduction gear, manoeuvring gear, auxiliary machinery servicing turbines (including standby auxiliary machinery), heat exchangers and systems, pipelines, equipment, fuel preparation system, cleaning systems of flowing parts of compressors and turbines, air filters, heat-recovery circuit (if any).

2.4.5.3.3.6 When main gas turbine engines and gas turbines of main (electric) generators are operationally tested, main working characteristics of turbines and compressors shall be checked including speed, lubricating oil pressure in lubricating system, lubricating oil temperature before and after oil cooler, cooling water pressure, cooling water temperature before and after water cooler, fuel pressure and temperature as well as other parameters describing technical condition of gas turbines and compressors. Position of turbine and compressor rotors, clearances of thrust bearings shall be also checked.

2.4.5.3.3.7 Manoeuvering gear and shaft turning gear with blocking and starting devices shall be operationally tested.

2.4.5.3.3.8 Reversing gears and reversing time of main gas turbine engines or astern operation of turbines shall be checked.

2.4.5.3.3.9 Gas turbine protection and alarm systems shall be checked. This check may be carried out by simulation of activation conditions for protection and alarm devices.

2.4.5.3.3.10 Communication efficiency between the navigating bridge and control station of main gas turbine engines shall be checked.

2.4.5.3.3.11 Repairs or replacement of gas turbine units and components shall be carried out if the survey revealed defects and wear exceeding permissible limits.

Such defects include:

.1 damage to essential units and components:

cracks in parts of gas turbines and compressors, such as casings, discs, blades, diaphragms and cracks in flame tubes of combustion chambers;

cracks and deformations (round-up) of rotors and gas turbine and compressor rotor shafts;

deformation, chipping, breakages of working blades of gas turbines and compressors;

cracks and fractures of working blade fastenings, fractures of connecting wires;

fusion, flaking, cracks, destruction of antifriction lining of sleeve bearings;

cracks, corrosion, dents, signs of overheating on the working surfaces of outer and inner races, separators, balls and rollers of roller bearings, roller bearing jams;

failures of control and gas turbine regulation system due to mechanical damage of system units and components;

.2 wear of essential units and components:

erosion and corrosion of gas turbine and compressor working blades;

erosion, corrosion, wear of nozzles;

wear, galling of working journals of gas turbine and compressor rotor shafts, ellipticity and conicity exceeding allowable limits;

wear of sleeve bearings and galling of bearing antifriction lining exceeding allowable limits, increase of bearing clearances exceeding maximum allowable limits;

galling of roller bearing seat of gas turbine and compressor rotor shafts;

expiration of roller bearing service life specified in manufacturers' technical documentation and manuals;

.3 defects of essential components and units:

dropping and axial float (shift) of rotor shafts exceeding maximum allowable limits (values) specified in manufacturer's technical documentation and maintenance manuals for gas turbines;

loosening of fit of rotor discs of gas turbines and compressors;

loosening of working blades fastening of gas turbines and compressors;

loosening of roller bearing seats of gas turbine and compressor rotor shafts;

non-tightness in the splits of gas turbine and compressor casings.

Besides, where units and components reveal damages, wear and defects, which prevent gas turbines and compressors from proper performing their functions, such units and components shall be repaired or replaced.

2.4.5.3.3.12 Gas turbines do not comply with the RS requirements if the operational testing reveals the following:

excessive vibration of gas turbines and compressors, their individual units and gas turbine reduction gears;

abnormal strikes, hammering and noises in gas turbines, compressors and gas turbine reduction gears;

abnormal heating of bearings, abnormal lubricating oil temperature increase in comparison with specified temperature parameters for bearings and lubricating oil;

defects of manoeuvring gear, governors, protection and alarm signalling system;

stalling and surging;

gas temperature increase beyond specified parameters;

defects of indicating and measuring instruments.

Causes of the above mentioned defects shall be detected and defects shall be eliminated.

If abnormal vibration in gas turbines and compressors is detected, its parameters shall be measured for assessment against technical standards and for development and implementation of vibration reduction actions (refer also to 2.4.5.3.1.3).

2.4.5.3.3.13 Manufacturer's technical documentation and gas turbine maintenance manuals shall be used for wear assessment of gas turbine and compressor units and components, assessment of allowable axial and diametrical clearances of units, allowable values of rotor position, its float.

2.4.5.4 Gears and couplings.

2.4.5.4.1 Special survey includes survey of tooth gears (reduction gears, reverse-reduction gears) coupling boxes and disengaging couplings of various types: rigid, elastic, hydraulic, electromagnetic, etc.

2.4.5.4.2 At special survey gears, reduction gears, reverse-reduction gears (hereinafter referred to as "reduction gears") and couplings shall be submitted for thorough examination with casings being opened up and units and components dismantled, where necessary.

2.4.5.4.3 The following parts and units of gears and reduction gears shall be surveyed: casing, foundation bolts and wedges, shafts and bearings, pinions and gear wheels, couplings of ahead and astern running or mechanisms of ahead and astern running (for reverse-reduction gears), lubricating oil pumps driven by tooth gears of reduction gears (if such pumps are fitted), control systems. Depending on the coupling purpose and design, its casing, connecting bolts, control systems, as well as units and components accessible for dismantling and those desirable to be fully examined shall be surveyed.

These units and components include:

for connecting rigid, semi-rigid movable and elastic, as well as friction couplings, intermediate metal bars, plates, cylindrical and leaf springs, intermediate components of rubber and other non-metal materials, elastic elements of different types, packs of driving and driven steel discs, cylindrical pins of halfcouplings;

for tooth and tooth-spring type couplings, tooth-type half-couplings with inner teeth, liners with outer teeth; and besides, for tooth-spring type couplings, elastic spring elements also;

for connecting/disengaging couplings of cam and tooth types, cams, gear wheels, pinions, synchronizers (if any); and besides, for tooth-type couplings, spring elements also;

for hydraulic couplings, pump and turbine rotors (wheels), shafts and bearings, hydraulic units and systems, regulating systems; shut-off, diaphragm, spring valves;

for electromagnetic connecting and connecting/ disengaging couplings, electromagnetic units, friction units and gear wheels (if any).

To determine dismantling and survey extent for reduction gears and couplings, manufacturer's technical documentation and maintenance manuals for reduction gears and couplings shall be considered.

Instructions and recommendations on performance of survey of the above components and units of gearings, reduction gears and couplings and their operational testing are set forth in 2.4.5.6, Part II "Carrying Out Classification Surveys of Ships" of the Guidelines.

2.4.5.4.4 During the survey the following shall be submitted to the surveyor: measurement results and wear assessment of shaft working journals, carrier and thrust bearing clearances, radial clearances of wheel teeth and gear wheels, coupling and slit disc teeth, clearances in components of lubricating oil and hydraulics driving pumps: in liners, between pinions and covers, between pinion teeth.

Where necessary, the surveyor may require for measurements of other units and components to be carried out depending upon manufacturer's maintenance manuals for tooth-type gears, reduction gears and couplings.

2.4.5.4.5 After completion of special survey and elimination of defects, gears, reduction gears and couplings shall be submitted for operational testing together with internal combustion engines, steam turbines, gas turbines they relate to.

2.4.5.4.6 When gears, reduction gears and couplings are operationally tested, attention shall be paid that these mechanisms have no abnormal hammering and strikes, abnormal noises, abnormal casing and bearing heating exceeding those limits, which are specified in the manufacturer's machinery maintenance manuals, and that there are no oil leakages in flanged connections and seals.

2.4.5.4.7 General provisions for assessing technical condition of gears and couplings are set forth in 2.4.5.1.4 — 2.4.5.1.6.

2.4.5.4.8 Repairs or replacement of units and components of tooth gears, reduction gears and couplings shall be carried out, if the survey revealed defects and wear exceeding permissible limits.

Such defects include:

.1 damage to essential units and components:

cracks of casings of tooth gears, reduction gears and couplings;

cracks and deformation (round-up) of driving and driven shafts, scuffing and galling of shaft working journals;

fusions, flaking, cracks, destruction of sleeve bearings antifriction lining;

cracks, corrosion, dents, signs of overheating on the working surfaces of outer and inner races, separators, balls and rollers of roller bearings;

roller bearing jams;

uneven galling of disc working surfaces of friction-type couplings, disc warping and scuffing, destruction of coupling springs;

crumpling, scuffing of cams and teeth working surfaces of movable couplings, break of springs, deterioration of elastic coupling teeth, crumpling of slit slots in connecting/disengaging couplings;

defects of coupling intermediate components preventing coupling from normal operation, defects of elastic elements of different types of couplings (refer to 2.4.5.4.3);

corrosion and cavitation of rotors and wheels of hydraulic coupling;

defects of valves, units and hydraulic system;

defects of electromagnetic units, friction units and control system of electromagnetic couplings;

.2 wear of essential units and components:

wear, galling of working journals of driving and driven shafts, ellipticity and conicity exceeding allowable limits;

wear of sleeve bearings, reduction of antifriction lining thickness of bearings exceeding allowable limits, increase of bearing clearance exceeding allowable limits;

galling of roller bearing slots;

expiration of roller bearing service life specified in manufacturer's technical documentation and maintenance manuals;

teeth wear, increase of teeth clearances of wheels and pinions exceeding maximum allowable limits;

wear of essential units and components of lubricating oil pumps driven by tooth gears;

increase of clearances in liners, between pinions and covers, between pinion teeth (for gear pumps) exceeding maximum allowable limits;

wear of cams and teeth working surfaces, wear of friction discs and plates of couplings of various types;

.3 defects of individual units and components:

defects of lubricating oil systems of pinions and gear wheels, shaft bearings of tooth gear, reduction gears and couplings;

defects of hydraulic systems and pumps of hydraulic couplings;

incorrect adjoining of shaft journals to sleeve bearings;

loosening of shaft roller bearing slots;

loosening of half-coupling fit on shafts;

non-compactness of casing slits of tooth gear, reduction gear and hydraulic couplings.

Besides, where other units and components reveal damages, wear and defects, which prevent tooth gears, reduction gears and couplings from proper performing their functions, such units and components shall be repaired or replaced.

2.4.5.4.9 Gears, reduction gears and couplings do not comply with the RS requirements if the operational testing reveals the following:

abnormal strikes, hammering and noises in gears, reduction gears and couplings;

bearing abnormal heating, abnormal lubricating oil temperature increase (in comparison with specification temperature parameters for bearings and lubricating oil);

excessive vibration of gears and reduction gears.

Causes of the above mentioned defects shall be detected and defects shall be eliminated.

If excessive vibration of gears and reduction gears is detected, its parameters shall be measured for assessment against technical standards and for development and implementation of vibration reduction actions (refer also to 2.4.5.3.1.3).

2.4.5.4.10 For wear assessment of units and components of gears, reduction gears and couplings, for clearance assessment and other parameters, manufacturers' technical documentation and maintenance manuals for the above machinery shall be used.

2.4.5.5 Auxiliary machinery.

2.4.5.5.1 Special survey includes survey of the following auxiliary machinery: boiler circulating pumps, bilge pumps, cooling water pumps, feed pumps, ballast pumps, fire pumps, fuel oil pumps, lubricating oil pumps, wet vacuum air pumps, condensate pumps and load steam jet ejectors of condensers, bilge ejectors, motors and pumps of hydraulic systems and hydraulic cylinders, centrifugal fuel and oil separators, air compressors with air coolers, fans of dangerous spaces, boiler blowers, steering gears, anchor and mooring machinery, machinery of launching appliances of boats and rafts, towing winches, stripping pumps and inert gas system blowers of oil tankers.

2.4.5.5.2 Auxiliary machinery driven by main ICE (cooling water pumps, lubricating oil pumps, fuel pumps, bilge pumps, air compressors, etc.), pumps driven by main steam engines (steam-boiler feed pumps, wet vacuum air pumps, bilge pumps) shall be surveyed together with main engines and machinery.

2.4.5.5.3 Compressor air coolers shall be tested by test pressure at the second special survey and afterwards every second special survey.

2.4.5.5.4 During the survey auxiliary machinery shall be submitted for thorough examination with units and components being opened up and dismantled, where necessary, depending on the purpose and type of auxiliary machinery.

2.4.5.5.5 The following shall be surveyed in piston pumps: cylinder blocks and head covers, cylinders and cylinder liners, pistons with piston rings and rods, crankshafts,

connecting rods with sliders, bearings, control valve boxes, suction and forcing valves with springs and fenders, valve seats, reduction couplings and coupling boxes, safety valves; besides, in direct-acting steam pumps steam cylinders and pistons with rods, cylinder head covers and slide valve covers, slide valve chests, steam distribution slide valves, slidevalve rods shall be surveyed.

2.4.5.5.6 In centrifugal pumps, fans, air blowers the following shall be surveyed: casings, casing covers, wheels, shafts with bearings, self-priming devices (of self-priming pumps), coupling boxes, safety valves and seals. The aforesaid also applies to peripheral, centrifugal peripheral and axial-flow pumps. At survey of these pumps manufacturer's technical documentation and pump maintenance manuals shall be considered.

2.4.5.5.7 For screw and gear pumps the following shall be surveyed: casings, casing covers, screws and screw pump casings (of screw pumps), shafts and pinions (of gear pumps), bearings, balance pistons of screw pumps (if any), safety overflow valves, seals.

2.4.5.5.8 Ejector units and components accessible for examination shall be surveyed.

2.4.5.5.9 For motors and pumps of hydraulic systems and hydrocylinders the following shall be surveyed: casings and covers, cylinders, plungers (plunger-and-barrel assembly), plunger bearing surfaces, seals, overflow, control and safety valves, pumps serving auxiliary systems (feed-water circuits, control system feeding, oil supply to hydraulic cylinders of brake drives, etc.). Recommendations to be found in manufacturer's technical documentation and maintenance manuals for hydraulic sets shall be also considered.

2.4.5.5.10 In centrifugal oil and fuel separators, bowls, bowl components, disks, bowl shafts, pinions, friction couplings, locks shall be surveyed.

Bowl body and vertical shafts shall be tested by an approved non-destructive testing method; results of testing for defects shall be submitted to the surveyor.

2.4.5.5.11 Cylinder blocks, cylinders, cylinder liners, cylinder covers, pistons with piston rings, connecting rods, crankshafts; crosshead, connecting rod and main bearings; suction, forcing and safety valves, valve seats, springs shall be surveyed in air piston compressors.

Compressor air coolers shall be surveyed in accessible places.

2.4.5.5.12 For fans in dangerous spaces and boiler blowers the following shall be surveyed: casings, shafts, rotors (impellers), bearings.

Completeness of the above mentioned machinery shall be checked, as well as casing and impeller material compliance with the requirements of manufacturer's technical documentation or maintenance manuals.

2.4.5.5.13 The following units and components shall be surveyed in steering gears of various types:

electrical steering gears — tillers of main and emergency gears, rudder quadrants, sliders or bearing rollers, couplings between electric motors and reduction gears, reduction gears, pinions, buffering spring compensators, limit switches and limiters, emergency (stand-by) gears with components;

electrical hydraulic steering gears — tillers, rods, cylinders of plunger hydraulic drives, plungers, pins for connection of plungers with rods, pumps of hydraulic drives, couplings (electric motors with pumps), hydraulic actuators, valve boxes, safety valves, feeding valves, pumps for loss recovery in the hydraulic system, packing seals, emergency (stand-by) gear, limit switches and other important units and components depending on steering gear design (refer also to 2.4.5.5.9 and 2.4.6.3).

Protection devices and alarms (if any) shall be examined in rudder gears.

Survey of steam rudder gears shall be carried out in accordance with the requirements applicable to the auxiliary steam engines.

Recommendations to be found in manufacturer's technical documentation and maintenance manuals for rudder gears shall be considered at survey of all types of rudder gears including those not mentioned in this paragraph (for instance, blade gears).

2.4.5.5.14 In anchor machinery (anchor windlasses and capstans) the following shall be surveyed: shafts, spindles, bearings, pinions, gear wheels, sprockets, worm shafts and wheels, reduction gears, belt, electromagnetic and other brakes, connection/disengaging couplings and sprocket switches, torquelimiting clutches (overload protection devices), foundation frames.

Survey of hydraulic driving gears (including hydraulic motors, pumps, accumulators, governors, valves, pipelines, etc.) of anchor machinery shall be carried out in accordance with 2.4.5.5.9 and 2.4.6.3.

Survey of these gears in steam driven anchor machinery shall be carried out in the scope of the auxiliary steam engine survey (refer to 2.4.5.2.2).

2.4.5.5.15 In mooring machinery (mooring capstans and winches) the following shall be surveyed: load shafts, spindles, drums, warping drums, bearings, gear wheels, worm shafts and pinions, reduction gears, belt and other brakes, connecting/disengaging couplings, friction couplings, torque-limiting clutches, overload protection devices, fairleads, foundation frames.

Survey of hydraulic drives and steam drives of mooring machinery shall be carried out in accordance with 2.4.5.2.2, 2.4.5.5.9, 2.4.5.5.14 and 2.4.6.3.

2.4.5.5.16 In launching appliances of boats and rafts the following shall be surveyed: shafts, drums, bearings, pinions and gear wheels of reduction gears, other tooth and chain gears, (if any), centrifugal, belt and other brakes, centrifugal couplings, coupling boxes, hand drives, locking arrangements preventing winches from spontaneous reverse rotation, limit switches, fairleads.

Boat winch hydraulic drives, if any, shall be surveyed in accordance with 2.4.5.5.9 and 2.4.6.3.

During survey of raft launching appliances, as well as boat launching appliances of other types not covered by the provisions of this paragraph, their units and components shall be examined according to instructions and recommendations set out in manufacturer's technical documentation and maintenance manuals for these appliances.

2.4.5.5.17 In towing winches the following shall be surveyed: shafts, drums, bearings, pinions and gear wheels, reduction gears, brakes with spring shock-absorbers, belt and other brakes, tooth type couplings (connection/disengaging), limit switches, fairleads with driving gears, automatic devices for governing the tension of the tow line, foundation frames (plates). Hydraulic drives of winches shall be surveyed in accordance with 2.4.5.5.9 and 2.4.6.3. Towing winch emergency release systems shall be surveyed in accordance with 2.4.3.6.4.

2.4.5.5.18 Instructions and recommendations for performance of surveys of components and details listed in 2.4.5.5.1 of this Chapter, auxiliary machinery and their operational testing the given in 2.4.5.7, Part II "Carrying Out Classification Surveys of Ships" of the Guidelines.

2.4.5.5.19 Operational testing of auxiliary machinery shall be carried out simultaneously with operational testing of machinery, arrangements and systems served by it.

During operational testing of auxiliary machinery, its main operation characteristics shall be checked with regard to the purpose of this machinery.

List of parameters and characteristics shall be checked, as well as duration of the auxiliary machinery operational testing shall be agreed upon with the surveyor.

2.4.5.5.20 Protection and alarm systems of auxiliary machinery shall be checked. This check may be carried out by simulation of activation conditions for protection and alarm systems.

2.4.5.5.21 General provisions for technical condition assessment of the machinery are given in 2.4.5.1.4 — 2.4.5.1.6.

2.4.5.5.22 Repairs and replacement of auxiliary machinery units and components shall be carried out if the survey revealed defects and wear exceeding permissible limits.

Applicable instructions of 2.4.5.2.1.16 and 2.4.5.4.8 shall be considered at assessment of technical condition.

Such defects, wear and failures also include:

.1 for pumps:

cracks on casings, covers, pistons, impellers, screws, pinions and shafts;

scuffing of cylinders, pump casings and screw casings;

touch of pump casings and screw casings by impellers, screws and pinions;

hard starting of pumps;

pump sticking;

pump casing vibration due to wear of bearings, misalignment of pumps in relation to electric motors;

misalignment of impellers of centrifugal pumps;

crumpling and cut of keys fixing impellers and pinions on shafts of screw and gear pumps, loosening of keys in keyways (key beds);

clearance increase between screws and casings, between pinion teeth of screw and gear pumps exceeding maximum allowable limits, wear and breakage of piston rings of piston pumps;

wear of shaft journals, wear and damage of sleeve bearings, wear and damage of roller bearings, wear of bearing seats of roller bearings on shafts;

clearance increase of sleeve bearings exceeding maximum allowable limits;

expire of service life of roller bearings;

poor pump capacity due to wear of units and components;

wear of coupling boxes;

.2 for motors and pumps of hydraulic drive systems (refer also to the respective defects in 2.4.5.5.22.1):

significant internal leakages in hydraulic motors and pumps;

wear of precision pairs of hydraulic motors and pumps;

.3 for fuel and oil centrifugal separators:

separator casing vibration;

damage to bowls and shafts;

damage to worm shafts and worm pinions of reduction gears;

wear or damage of friction couplings;

.4 for air piston compressors (refer also to the respective defects in 2.4.5.5.22.1):

compressor casing vibration;

reduction of capacity and compression pressure due to wear of cylindrical piston groups, damage to valves, break of valve springs;

.5 for hydraulic steering gears (refer also to the respective defects in 2.4.5.5.22.1, 2.4.5.5.22.2, 2.4.5.5.22.6):

break of plunger seals in power cylinders;

fault of putting the rudder over due to valve defects, faults of hydraulic pumps, steering gear misalignment;

oil leakage from hydraulic systems;

galling of coupling boxes;

.6 for anchor and mooring machinery, towing winches, lifeboat winches (refer also to the respective defects in 2.4.5.5.22.1, 2.4.5.5.22.5):

chipping and damage of worm pinions, damage of worm shafts of reduction gears, chipping of teeth of wheels, pinions, progressing pitting of wheel and pinion teeth of cylindrical tooth gears;

oil leakage through contacting surfaces of reduction gear casing parts;

galling of belt brakes;

galling of coupling boxes.

Survey of hydraulic anchor, mooring machinery, towing, lifeboat winches shall be carried out in accordance with 2.4.5.5.22.2, 2.4.6.3.

Besides, where other units and components reveal damages, wear and defects, which prevent auxiliary machinery listed in 2.4.5.5.1 from proper performing its functions, such units and components shall be replaced or repaired.

Manufacturer's recommendations to be found in technical documentation and machinery maintenance manuals shall be considered at assessment of contact (adjoining) of teeth of wheels, pinions, worm shafts and worm pinions and at assessment of clearances.

2.4.5.5.23 Auxiliary machinery do not comply with the RS requirements, if the operational testing reveals the following:

service parameters and characteristics do not comply with those given in specification;

excessive machinery vibration;

abnormal strikes, hammering and noises in machinery;

bearing abnormal heating;

temperature of lubricating oil for bearings and reduction gears, as well as oil temperature in hydraulic drive systems exceed permissible values specified in manufacturer's instructions;

defects of instruments.

Causes of the above mentioned defects shall be detected and defects shall be eliminated.

If excessive vibration of auxiliary machinery is detected, its parameters shall be measured for assessment against technical standards and for development and implementation of vibration reduction actions.

2.4.5.5.24 Manufacturer's technical documentation and auxiliary machinery maintenance manuals shall be used for wear assessment of auxiliary machinery units and components, for assessment of allowable clearances in units.

2.4.5.6 Ship boilers.

2.4.5.6.1 Survey of ship boilers is an integral part of special survey and shall be carried out in compliance with 2.10.

2.4.5.7 Heat exchangers and pressure vessels.

2.4.5.7.1 Special survey includes survey of heat exchangers and pressure vessels such as:

evaporators of dirty condensates;

evaporators of main and auxiliary boilers for essential services;

condensers of main and auxiliary machinery;

deaerators and feed water heaters;

air receivers and other pressure vessels.

2.4.5.7.2 General.

2.4.5.7.2.1 Internal survey of heat exchanger and pressure vessel shall be carried out at each special survey of the ship.

Internal surveys and hydraulic tests of cylinders of carbon dioxide extinction station may be carried out by competent organizations recognized by the Register or ACS — IACS member (taking into account Section 7, Part I "General Provisions"). Not less than 10 % of all high pressure CO_2 cylinders shall undergo hydraulic tests once in 10 years.

If during internal examination of cylinders defects have been revealed, the defective cylinders shall be subjected to hydraulic test so that, based on the results of this test, the necessity for hydraulic test of all remaining cylinders can be identified (refer also to 2.4.4.3.10). If one or more carbon dioxide cylinders fail, a total of 50 % of onboard cylinders shall be subject to hydraulic tests. Flexible hoses shall be replaced at intervals recommended by the manufacturer and not exceeding 10 years.

Aboard ship the availability of the ship's maintenance plan for carbon dioxide smothering systems shall be checked.

Maintenance of carbon dioxide smothering systems in accordance with the ship's maintenance plan shall be performed by the organizations recognized by the Register or

ACS — IACS member (taking into account Section 7, Part I "General Provisions") at least once every two years (at interval 2 years + 3 months) on passenger ships or at each special survey on cargo ships.

2.4.5.7.3 Survey of heat exchangers and pressure vessels other than those listed in 2.4.5.7.1 shall be carried out by the surveyor only at the initial survey of machinery and after significant repairs. Their survey and test in all other cases shall be carried out by a competent representative of the shipowner in terms and in the scope specified in the present Section.

Notes on survey and test results carried out by the competent representative of the shipowner shall be checked by the surveyor in the ship's documentation.

2.4.5.7.4 Internal survey.

2.4.5.7.4.1 Applicable requirements of 2.10 shall be considered when preparing for and carrying out special surveys.

2.4.5.7.4.2 Apparatuses and vessels inaccessible for internal survey due to their location shall be taken off or removed from their places.

Heat exchangers and vessels are considered inaccessible for internal survey if:

clear diameter of a hole for vessel head is 30 mm and less;

length of vessel is 2,5 m and above with no manholes on both bottoms;

it is necessary to remove tubes and tube plates to examine heat exchangers inside, at that, the survey shall be visual without using special technical control means enabling carrying out internal survey of above mentioned vessels.

During the internal survey of these vessels using control tools the hydraulic testing of these vessels may be requested by the surveyor considering the examination results.

2.4.5.7.4.3 Vaporizers serving main boilers are subjected to internal survey in terms established for water tube boilers.

2.4.5.7.5 Hydraulic testing.

2.4.5.7.5.1 Hydraulic testing of heat exchangers and pressure vessels inaccessible for internal survey (refer to 2.4.5.7.4.2) shall be carried out starting from the second special survey and thereafter — at each second special survey, however vessels filled with exhaust gases shall be subjected to hydraulic testing at each special survey of the ship.

2.4.5.7.5.2 Hydraulic testing of heat exchangers and pressure vessels may be demanded by the surveyor based upon the results of internal survey.

2.4.5.7.5.3 There are no periodical hydraulic testing for condensers.

2.4.5.7.6 Test pressure for hydraulic testing of heat exchangers and pressure vessels is taken equal to 1,25 working pressure but in any case it shall not be less than $P_{working}$ + 100 kPa.

Instructions for carrying out internal surveys and hydraulic tests are specified in 2.4.5.8.1 and 2.4.5.8.2, Part II "Carrying Out Classification Surveys of Ships" of the Guidelines.

2.4.5.7.7 Heat exchangers and pressure vessels shall be submitted for external examination together with installed mandatory fittings and all other devices and systems serving them.

2.4.5.7.8 Safety valves shall be adjusted for a pressure exceeding working pressure by not more than 10 % unless pressure, for which the safety valve shall be adjusted, is expressly specified.

When lifted, the safety valves of air receivers of main and auxiliary engines and fire extinguishing systems shall fully interrupt the outgoing air flow in case of the pressure drop in the air receiver no more than 15 % of the working pressure.

After their adjustment and operational testing, safety valves of air receivers shall be sealed by the chief engineer in the presence of the surveyor to the Register.

2.4.5.7.9 Assessment of technical condition of heat exchangers and pressure vessels shall be carried out on the basis of the survey and testing results (refer to the internal normative documents on repair intended for the use of RS surveyors). If excessive wear is found during inspection, the RS surveyor may demand determination of residual thickness of

hulls, tube and other elements of heat exchanges and pressure vessels by check drilling or by thickness gages.

2.4.5.7.10 If the average wear of walls of hulls, tubes and other responsible elements determined upon several residual thickness measurements exceeds 10 % of the initial thickness or local wear in the form of pitting wear exceeds 20 % of the initial thickness, the worn element shall be replaced or repaired; at that, excessive thicknesses in relation to those required by the RS Rules may be considered. Instructions on technical supervision during repair of heat exchangers and pressure vessels are given in the internal normative documents on repair intended for the use of RS surveyors. Heat exchangers and pressure vessels worn in excess of the specified standards may be allowed for service at reduced working pressure if this is justified by strength calculations considering the wear. The above said does not refer to CO_2 cylinders, for which the reduced working pressure is not allowed.

Air receivers of starting air of main and auxiliary engines may be used at reduced working pressure only if this does not reduce the number of engine starts required by 16.1.3 — 16.1.5, Part VIII "Systems and Piping" of the Rules for the Classification and Construction of Sea-Going Ships.

2.4.5.7.11 Heat exchangers and pressure vessels are not allowed for operation when insufficient strength is found and the following specific defects are found:

reduction of residual thickness more than values specified in 2.4.5.7.10;

cracks and honeycombs in hulls and tubes;

deformation of hulls and tubes;

gaps in joints;

failures of safety and reducing valves and other responsible fittings;

absence or failure of instrumentation.

2.4.5.8 Systems and piping.

2.4.5.8.1 Special survey includes survey of pipelines of machinery installations with exhaust gas, fuel oil, lubricating oil, cooling water, feed water and compressed air fittings, steam pipes and blow-off pipes.

2.4.5.8.2 At special survey of systems, thorough examination of pipelines and their individual elements shall be carried out with access, opening-up or dismantling, pipe residual thickness measurement, hydraulic tests and operational testing being provided, where necessary.

2.4.5.8.3 Items submitted for survey shall be properly prepared with safety casing and cladding opened, cleared from mud, deposits, scale.

2.4.5.8.4 System tracing diagram shall be prepared and submitted for agreement to the Register with indication of each measurement point and residual thicknesses.

2.4.5.8.5 Before hydraulic test, insulation around detachable joints and seam shall be removed within 100 mm on both sides of the joint (seam).

2.4.5.8.6 Exhaust gas system of engines and boilers shall be surveyed by enabling access to internal examination of silencers, spark arresters and devices preventing water penetration into the engine. In necessary cases residual thickness measurements of these devices shall be carried out. By-pass dampers and their actuators shall be submitted in dismantled condition with measurement results, where necessary. The system shall be externally examined. Spark arresting and drainage arrangements shall be submitted in operation.

2.4.5.8.7 Fuel system.

Independent fuel oil tanks shall be surveyed in accordance with 2.4.2.2.3. Fittings shall be flaw detected and repaired, safety valves adjusted and sealed.

Seal elements of pipeline detachable joints with signs of fuel leakage shall be replaced, and pipelines with fittings in assembly shall be tested under working conditions in accordance with the requirements of Section 21, Part VIII "Systems and Piping" of the Rules for the Classification and Construction of Sea-Going Ships. Gas fuel system shall be

surveyed according to the requirements of 13.12, Part VIII "Systems and Piping" of the Rules for the Classification and Construction of Sea-Going Ships. Operational testing of the system, if possible, shall be carried out simultaneously with the operational testing of the respective machinery.

2.4.5.8.8 Lubricating oil and hydraulic system.

Applicable requirements of 2.4.5.8.7 shall be considered during survey of the system.

2.4.5.8.9 Cooling water system.

2.4.5.8.9.1 Sea water cooling system.

System fittings shall be flaw detected and repaired. Filters shall be submitted for thorough examination. Emergency drainage valve shall be submitted for survey in a dismantled condition. Welded branch pipes of sea valves and pipelines (ducts) connecting sea chests and ice boxes shall be tested by hydraulic pressure in accordance with 2.4.6.4 during each special survey starting from the second one. The system operational testing, if possible, shall be carried out simultaneously with the operational testing of the respective machinery.

2.4.5.8.9.2 Fresh water cooling system.

Applicable requirements of 2.4.5.8.9.1 shall be considered during survey of the system.

2.4.5.8.10 Condensate feeding system.

The system shall be submitted for survey in accordance with the applicable requirements of 2.4.5.8. Feeding pipeline between feeding pumps and boilers is subjected to hydraulic test by a pressure $P_{test} = P_{working}$ in accordance with Table 2.1.1-1 of Part II "Survey Schedule and Scope". Fittings shall be flaw detected and repaired. Filters shall be submitted for thorough internal examination. Automation arrangements shall be submitted for examination with opening-up and dismantling, where necessary. If possible, the system operational testing shall be carried out simultaneously with the operational testing of the respective machinery and boilers.

2.4.5.8.11 Steam pipelines.

Main boiler steam pipes irrespective of the diameter and auxiliary boiler steam pipes with working pressure of 1 MPa and above, inner diameter of 75 mm and above shall be subject to hydraulic tests with test pressure of $1{,}25P_{working}$ starting from the second special survey and thereafter — at each second special survey. Fittings shall be flaw detected and repaired. Safety valves shall be adjusted and sealed. Spring hangers shall be surveyed in dismantled condition and measurements shall be submitted. Operational testing, if possible, shall be carried out simultaneously with the operational testing of the power plant and the respective machinery and boilers.

2.4.5.8.12 Compressed air system.

Compressed air pipelines with working pressure of 1 MPa and above, inner diameter of 75 mm and above are subject to hydraulic tests at 10-year intervals by test pressure 1,25 $P_{working}$.

Fittings shall be flaw detected and repaired. Safety valves shall be adjusted and sealed.

2.4.5.8.13 The summarized scope and schedule of surveys and tests are given in Table 2.1.1-1 of Part II "Survey Schedule and Scope".

2.4.5.8.14 Technical condition of systems and piping is assessed upon the results of survey performed.

Ifexcessive wear is found during survey, the surveyor may demand determination of residual thickness of pipe walls, as well as apparatuses and vessels forming a part of the system by drilling with mechanical instruments, by thickness gages or non-destructive testing instruments.

2.4.5.8.15 When dangerous defects of piping or fittings are found during survey, system operation shall be prohibited until elimination of defects.

2.4.5.8.16 Additional instructions on survey of the ship piping are given in Annex 26 to the Guidelines.

2.4.5.9 Shafting, propellers and AMSS shall be surveyed at special survey of a ship in accordance with 2.11.

2.4.6 Ship systems and piping.

2.4.6.1 Special survey includes survey of the general ship systems and piping with fittings and instrumentation (bilge, drainage, ballast, heeling and trimming, pipelines passing through fuel oil and liquid cargo tanks, liquid cargo systems of oil tankers, air, overflow and sounding pipes, ventilation), hydraulic drive systems, bottom and side valves and valves on the watertight bulkheads, corrosion protection condition.

Instructions on the ship's piping survey are given in Annex 26 to the Guidelines.

For special survey of systems and piping forming part of the ship machinery installations, refer to 2.4.5.8 of this Chapter.

2.4.6.2 At each special survey of general ship systems and piping listed in 2.4.6.1, thorough examination of systems and their separate components shall be carried out providing, where necessary, access, opening-up or dismantling, measurement of residual thicknesses of pipes, as well as hydraulic tests and operational testing.

Instructions for preparation of general ship systems and piping for survey, refer to 2.4.5.8.3 — 2.4.5.8.5.

Liquid cargo systems on oil tankers, oil recovery ships and combination carriers, gas carriers and chemical tankers shall be degassed prior to survey.

The requirements for survey of general ship systems listed in 2.4.6.1 are given below:

.1 during survey of the bilge system, the inlet branch pipes, their mud boxes or screens, shut-off and non-return valves, manifolds and their non-return valves, water seals for drying cooled spaces, stop valves of drainage pipes in bilge system shall be examined. During operational testing of the system compartments shall be dried by each bilge pump and emergency drying of engine room, as well as actuation of the valve remote control shall be carried out.

Where emergency drainage system is available on board, it shall be subjected to the similar survey and operational testing;

.2 during survey of the ballast system, valves on watertight bulkheads and valves of distribution boxes shall be examined.

During operational testing, pumping of water from the farthermost ballast tanks by each ballast pump and operation of valve remote control drives shall be checked;

.3 during survey of the liquid cargo system on oil tankers, it is necessary to carry out the external examination of pipelines and fittings, as well as contact banks on flange joints of cargo pipeline and earthing.

Pump remote stopping devices shall be checked;

.4 during survey of air, exhaust gas, overflow and sounding pipes, it is necessary to check the availability and condition of closures of outlets of air pipes on open decks, shut-off valves of air pipes of sea chests and ice boxes, flame arresters on air pipes of fuel oil, oil and liquid cargo tanks, cofferdams adjacent to cargo tanks and slop tanks, on the outlets of vent pipes, breathing valves and flame arresters of vent pipes, protective devices from the atmospheric precipitates, sight glasses on overflow pipes, selfclosing and test cocks of short sounding pipes and liquid level indicator;

.5 during survey of the ventilation system, it is necessary to check the condition of vent ducts and trunks, especially in the places of passage through watertight and fire bulkheads, fire dampers and their drives, closures of ventilating cowls on open decks, insulation of vent ducts, flame arresters on ventilation trunks of cargo pump rooms, etc.

Ventilating system of hazardous spaces shall be operationally tested. Ships whose keels were laid on or after 1 January 2012 shall be checked for the availability of safe access to the controls for closure of ventilation ducts (refer to 12.1.10, Part VIII "Systems and Piping" of the Rules for the Classification and Construction of Sea-Going Ships) leading to cargo, machinery and other spaces fitted with fire smothering systems;

.6 special survey includes survey of drainage pipes passing through the sides, decks, bulkheads and platforms.

Drainage pipes shall be submitted for examination with the provision of access, opening-up and dismantling, where necessary.

Drainage pipes together with detachable joints, bulkhead penetrations, pipeline and bottom and side valves shall be surveyed in order to assess their condition, absence of medium gaps and external indications of damage.

During survey of fittings (valves), the condition of local and remote control drives shall be checked.

Where necessary, upon the surveyor's request, the pipeline insulation (if any) shall be removed, pipes and fittings (valves) shall be dismantled for examination of their internal surface, assessment of condition of valves, gate valves and flaps, and the residual thickness of pipes shall be measured. For this purpose before dismantling and survey the drainage pipes shall be prepared, flushed and steamed out, as appropriate.

Upon completion of the survey, the drainage pipes together with detachable joints, bulkhead penetrations, pipeline and bottom and side valves shall be submitted for operational testing according to their purpose. At the same time the serviceability of the local and remote fitting control stations shall be checked.

Repairs or replacement of drainage pipes and fittings (valves) shall be carried out if defects or wear, preventing the use of pipes and fittings (valves) for their intended purpose, were revealed during the survey. Pipe cracks, through holes in pipe walls, unavoidable looseness in the detachable pipe joints, damage of bulkhead penetrations, pipeline and bottom and side valves, leaking of medium through the closed valves, gate valves and flaps due to their wear or damage, wear of pipe walls exceeding the limits of pipe wear, stated in the technical documentation of the appropriate organizations and firms or exceeding the limiting residual pipe wall thickness, are considered as such.

Drainage pipes do not comply with the RS requirements, if during survey and operational testing the above mentioned defects or other defects, preventing the use of pipes and fittings (valves) for their intended purpose, are revealed;

.7 plastic pipelines used in the ventilation system, passing through the watertight and fire-fighting bulkheads and hazardous spaces, shall be examined providing, where necessary, access, opening-up and dismantling at intermediate and special surveys.

2.4.6.3 Hydraulic drive systems.

2.4.6.3.1 Special survey of hydraulic drive systems includes the survey of hydraulic motors, hydraulic pumps, pipelines, valve units, slide valve units, auxiliary drive pump (make-up pumps, etc.), hydraulic amplifiers, draining stations and hydraulic accumulators (if any), hydraulic cylinders of the brakes (in deck machinery with hydraulic drives), safety valves, pneumatic tanks and draining tanks (if any), and other hydraulic devices and units depending on the design and purpose of the hydraulic drives.

2.4.6.3.2 At special survey, hydraulic drive systems including their components and units, listed in 2.4.6.3.1, shall be submitted for survey with the provision of access, opening-up and dismantling, where necessary. Therewith the directions contained in the manufacturers' technical documentation and maintenance manuals for hydraulic drive systems shall be considered, as well as structural peculiarities of the systems installed. If required, at the surveyor's request, pipe residual thickness measurements shall be carried out. In the cases stipulated in the manufacturers' technical documentation and manuals the surveyor may require for measurement results and wear determination of the essential units and components of the hydraulic drive systems to be submitted.

2.4.6.3.3 Upon completion of the survey and elimination of the defects revealed during the survey, the hydraulic drive systems shall be submitted for operational testing together with hydraulic motors and hydraulic pumps of the respective machinery (refer to 2.4.5.5).

The main characteristics of the hydraulic drives operation shall be checked during the operational testing of the machinery served by them.

2.4.6.3.4 In addition to the requirements of 2.4.6.3.3, the following shall be checked:

.1 failure-free operation of the hydraulic drive systems;

.2 operation of working liquid draining devices after lifting safety valves;

.3 operation of the devices for air removal from the hydraulic drive machinery and system;

.4 operation of the devices (pumps, valves, etc.) for refilling the working liquid leakages and the devices for the liquid draining from the system;

.5 operation of filters, control equipment;

.6 operation of the working liquid accumulators (if any);

.7 absence of working medium gaps in the system and air inflows;

.8 operation of instrumentation.

2.4.6.3.5 General provisions for assessment of technical condition of hydraulic drive systems are stipulated in 2.4.5.1.4 — 2.4.5.1.6.

2.4.6.3.6 Repairs or replacement of units or components in the hydraulic drive systems shall be carried out in case defects or wear, preventing the use of pipes and fittings (valves) for their intended purpose, are revealed during the survey. Pipe cracks, through holes in pipe walls, unavoidable looseness in the detachable pipe joints, leaking of medium through the valves, slide gates, auxiliary pumps, accumulator diaphragm fracture, failure of auxiliary drive pumps (make-up pump for refilling leakage in the system, drain station pump, etc.) failure of control equipment, pipe wall wear exceeding the maximum allowable limits stated in the appropriate technical documentation or in the present Rules are considered as such.

2.4.6.3.7 Hydraulic drive systems do not comply with the RS requirements, if during the survey and operational testing the defects mentioned in 2.4.6.3.6 or other defects, preventing the use of pipes and fittings (valves) for their intended purpose, are revealed.

2.4.6.4 Bottom and side valves and valves on watertight bulkhead.

2.4.6.4.1 Special survey includes the survey of bottom and side valves and valves on watertight bulkheads located both above and under the waterline.

2.4.6.4.2 At special surveys, the bottom and side valves and valves on watertight bulkheads shall be submitted for thorough examination together with their actuating mechanisms, with mandatory opening-up of units and components. Such surveys shall be carried out simultaneously with dock surveys (refer to 2.5).

2.4.6.4.3 At every intermediate and special dry dock survey starting from the second special survey, and for ships subject to annual docking (refer to 2.5), at the second or third annual dry dock surveys the bottom and side valves shall be submitted in the dismantled condition, defects shall be detected and the fittings shall be repaired and lapped. The branch pipes where the above mentioned fittings are installed as well as pipes (ducts) connecting sea chests and ice boxes shall be submitted for thorough examination accompanied by residual thickness measurement. The requirements of this paragraph in respect of residual thickness measurements shall also apply to in-water survey.

2.4.6.4.4 Hydraulic tests instead of surveys with the residual thickness measurement are not allowed.

2.4.6.4.5 After the ship has been launched the valves shall be thoroughly examined and operationally tested.

2.4.6.4.6 Watertight bulkhead valves shall be submitted for survey in dismantled condition. The bulkhead penetrations shall be submitted for thorough examination. If necessary, the residual thickness measurements shall be carried out.

2.4.6.4.7 The local and remote control means shall be submitted in operation.

2.4.6.4.8 Bottom and side valves and valves installed beneath the waterline and also welded branches and pipelines (channels) connecting sea chests and ice boxes, if the valves are installed thereon, shall be tested at each special survey, starting from the second survey.

The above valves and branches shall be hydraulically tested by not less than 0,5 MPa testing pressure.

Test pressure of the hydraulic test corresponds to the pressure stipulated for the sea chests and ice boxes, and pipelines (channels) connecting sea chests and ice boxes which shall be hose tested up to the level of 1,25 height of the ship's side, the test pressure being not less than the pressure in the blowing system of sea chests and ice boxes.

Discharge valves above waterline shall be hydraulically tested by the test pressure equal to the pressure of the valves blowing up medium or the test pressure shall be taken equal to 0,2 MPa.

After repair or replacement the valves shall be hydraulically tested by the pressure not less than 0,5 MPa.

2.4.6.4.9 Upon completion of the survey and elimination of the defects revealed during the survey, the bottom and side valves and valves on watertight bulkheads shall be submitted for operational testing together with their actuating mechanisms.

2.4.6.4.10 General provisions for assessment of the valves technical condition are stipulated in 2.4.6.1.

2.4.6.4.11 Repairs or replacement of the fittings' units and components shall be carried out if the defects preventing the use of the valves for their intended purpose are revealed during the survey.

Material of gaskets being installed in the assembly process of the valves shall comply with the technical documentation (drawings) approved by the Register.

2.4.6.4.12 Bottom and side valves and valves on watertight bulkheads do not comply with the RS requirements, if during the survey and operational testing the defects, preventing the use of the valves for their intended purpose, are revealed.

2.4.6.5 Piping passing through fuel tanks and cargo tanks.

2.4.6.5.1 Special survey includes the survey of pipelines passing through fuel tanks and cargo tanks without tunnels.

2.4.6.5.2 During survey the pipelines passing through fuel tanks and cargo tanks without tunnels shall be submitted for survey with the provision of access, opening-up and dismantling, where necessary. If needed, at the surveyor's request, the measurements of the pipe residual thickness shall be carried out.

2.4.6.5.3 The pipelines in question shall be tested hydraulically at each special survey. Where the pipelines are fitted with detachable joints inside the tanks, they shall be hydraulically tested at intermediate surveys. The test pressure of pipeline hydraulic test shall be taken equal to 1,5 maximum working pressure ($1{,}5P_{working}$) of the pipeline passing through fuel tanks and cargo tanks.

2.4.6.5.4 Upon completion of the survey and elimination of the defects revealed during the survey the pipelines shall be submitted for operational testing.

2.4.6.5.5 General provisions for assessment of the fittings' technical condition are stipulated in 2.4.6.1 and 2.4.6.2.

2.4.6.5.6 Repairs or replacement of the pipelines shall be carried out if the defects preventing the use of the pipelines for their intended purpose are revealed during the survey.

2.4.6.5.7 The piping in question do not comply with the RS requirements, if during the survey and operational testing the irremediable defects are detected.

2.4.6.6 Other systems and piping.

2.4.6.6.1 Special surveys of other systems and pipelines shall be carried out in accordance with the applicable instructions of 2.4.6.1 — 2.4.6.5.

2.4.6.6.2 Special survey of ship hoses covered by the RS Nomenclature shall be carried out in the scope specified in 2.2.6.5 with the obligatory hydraulic tests under a pressure equal to the maximum allowable working pressure of the hose stated in its RS certificate (refer to 4.5, Part I "General Provisions") and marked on both ends of the hose or to 1,5 of the working pressure of the system on which the hose is fitted, whichever is greater.

2.4.6.6.3 Repair of hoses may be carried out according to procedure approved by the Register by means of curing the pad layers lying outside the wire spiral. The repair of the pad layers in each case shall be carried out layer by layer. It is not permitted to repair the same hose segment more than once. After repair the survey and hydraulic testing shall be repeated under the Register technical supervision.

2.4.6.7 Corrosion protection.

2.4.6.7.1 At special survey the condition of corrosion protection of sea water piping shall be checked: insulating joints for the absence of metal-contacting surfaces (voltage drop shall not be less than 0,1 V); protectors (protectors, which working metal is worn by more than 40 % of the initial mass by the date of survey, shall be replaced);

"sacrificial" branch pipes (residual wall thickness of "sacrificial" branch pipes shall be sufficient till the next special survey with regard to carbon steel corrosion rate being equal to1,5 mm per year).

2.4.7 Electrical equipment.

2.4.7.1 General.

2.4.7.1.1 During special survey of the ship the list of its electrical equipment, its design, arrangement and installation shall be checked for compliance with the Rules for Construction and the technical condition of the electrical equipment shall be determined. Additional instructions on survey of electrical equipment are given in the internal normative documents on repair intended for the use of RS surveyors.

2.4.7.1.2 The summarized scope of survey of the electrical components is given in Table 2.1.1-1 of Part II "Survey Schedule and Scope".

2.4.7.1.3 If in the period prior to special survey of the ship or during special survey the repair works of the main generators, propeller motors were carried out, then the said electrical machines shall be tested during the sea trials together with the whole electric propulsion plant. The program of sea trials with indication of modes and duration of the trials shall be submitted to the Register for approval.

2.4.7.1.4 The technical condition of the electrical equipment shall be determined as per the survey results and the information on in-service wears, damages, failures, repairs and replacements indicated in the ship's documentation (maintenance records, ship protocols machinery logs, etc.).

2.4.7.1.5 For new electrical equipment being installed on board the ship, the documents shall be submitted for the items stipulated by the Rules for Construction and by RTSCS.

2.4.7.1.6 Electrical equipment of domestic services shall be subjected to the technical supervision by the Register in respect of selection of types and cross-section of cables and wires, methods of cable installation and connection, insulation resistance, earthing and protection devices.

2.4.7.1.7 The permissible standards of the axial shaft displacement in the sliding bearings of electrical machines, standards of the insulation resistance and standards of self-vibration of electrical machines are given in Tables 2.4.7.1.7-1, 2.4.7.1.7-2 and 2.4.7.1.7-3, accordingly.

Standards of the permissible variations of the air gaps of the electrical machines shall be determined in accordance with the stated below.

The maximum permissible deviations of the air gaps relative to the arithmetic mean value:

between rotor and stator of asynchronous machines — up to ± 25 %;

between rotor and stator of synchronous machines — up to ± 10 %;

for direct-current machines with lap winding with gaps between the armature and main poles up to 3 mm — ± 10 %, more than 3 mm — up to ± 5 %;

for directcurrent machines with wave winding with gaps between the armature and main poles up to 3 mm — ± 25 %, more than 3 mm — up to ± 12 %;

for direct current machines (between the armature and commutating poles) ± 5 %.

Measurement of air gaps, where possible, shall be performed from both sides of the armature (rotor) in four different points in two perpendicular planes (in 90°).

Table 2.4.7.1.7-1

Standards of axial shaft displacement in sliding bearing of electrical machines

Output, in kW	Shaft displacement	
	one side	both sides
Up to 10	0,5	1,0
10 — 30	0,75	1,5
30 — 70	1,0	2,0
70 — 125	1,5	3,0
Over 125	2,0	4,0
Notes: 1. Displacement established to both sides of the armature (rotor) central position, being determined by magnetic field. 2. For machines with the shaft journal diameter being more than 200 mm, rundown is taken to be equal to 2 % of the shaft journal diameter.		

Table 2.4.7.1.7-2

Standards of insulation resistance

Nos.	Electrical equipment	Resistance of insulation in the heated condition, in MOh	
		Normal	Maximum allowable
1	Electrical machines	0,7 and above	not less than 0,2
2	Magnetic stations, starting devices	0,5 and above	not less than 0,2
3	Main, emergency, distribution switchboards, control panels, etc. with the detached external circuits, earthing indicators signal lamps, voltmeters, etc.: up to 100 V 100 — 500 V	 0,3 and above 1,0 and above	 not less than 0,06 not less than 0,2
4	Accumulator batteries with the detached consumers: up to 24 V 25 — 220 V	 0,1 and above 0,5 and above	 not less than 0,02 not less than 0,1
5	Cable network feeder: lighting up to 100 V 100 — 220 V power 100 — 500 V	 0,3 and above 0,5 and above 1,0 and above	 not less than 0,06 not less than 0,2 not less than 0,2
6	Signalling and monitoring control circuits: up to 100 V 101 — 500 V	 0,3 and above 1,0 and above	 not less than 0,06 not less than 0,2

Table 2.4.7.1.7-3

Standards of self-vibration of electrical machines

Speed of rotation, in min^{-1}	1000	1500	2000	2500	3000	4000	5000
Self-vibration amplitude, in mm	0,1	0,09	0,075	0,060	0,050	0,030	0,020
Note. The limits of the allowable vibrations are determined by the maximum double amplitude of self-vibration of electrical machines indicated in the Table.							

2.4.7.1.8 The allowable eccentricity of commutators and rings shall not exceed the values regulated by the manufacturer's documentation, and in the absence of the latter — by the RS-approved documentation.

2.4.7.2 Electric propulsion plants.

2.4.7.2.1 Electric propulsion plants — main generators, propulsion motors and electromagnetic clutches with all the servicing auxiliary machinery, switchboards, control and monitoring panels, safety interlock and signalling — shall be operationally tested together with the prime movers. During the examination of main generators, exciting units, converters, the following shall be checked:

condition of bed plate, end shields and bearings;

axial displacement of armature or rotor in sliding bearings (displacement shall not exceed the values indicated in Table 2.4.7.1.7-1);

clearances in the bearings of electrical machines of the electric propulsion plant (the clearances shall correspond to the manufacturer's data). Where it is not possible to measure bearing clearances of electrical machines, the data available from the bearing vibration monitoring systems provided by the machine manufacturer shall be used to assess the technical condition. The specified vibration monitoring systems shall be approved by RS;

air gaps of the machines (the gaps shall correspond to the manufacturer's data, the maximum allowable variations are given in 2.4.7.1.7);

insulation of bearings of propulsion motors and main generators of electric propulsion plant;

condition of surfaces of commutators and slip rings (refer to 2.4.7.1.8);

position of the cross-piece in accordance with the mark available, condition of brushes and brush unit;

availability and condition of instrumentation (temperature sensors, oil and water pressure relays, water sensors, etc.) and heating elements;

availability and condition of spare parts.

During the examination attention shall be paid to possible cracks in the bed plates and shafts of rotors and armatures and in the end shields of machines, damage of a layer of protective varnish of stator windings, armature and pole coils, located outside of the slots and in the shrouding of rotor and stator front parts, burrs and other defects of the internal surfaces of brush holder collars. Examination of components of electrical machines inaccessible for visual examination may be carried out using specific technical means, e.g. industrial endoscope (boroscope).

2.4.7.2.2 When testing the electrical propulsion plant at direct current the following shall be checked:

start of prime movers by electric starter (if provided);

start and reverse of propulsion motors at the minimum speed of rotation, operation of electrical propulsion plant at every position of the mode switchgear on the main exciting unit and other main auxiliary machinery, as well as on the standby exciting unit and standby auxiliary machinery;

control of propulsion motors from each control station;

actuating of all types of protection provided by the electric movement diagram;

operation of interlocks and signalling provided by the electric movement diagram.

2.4.7.2.3 Operational testing of the electric propulsion plant at alternating current shall be carried out similar to the test of the electrical propulsion plant at direct current.

Moreover, the following shall be checked:

start and reverse of propulsion electric motors from two diesel-generators and from one dieselgenerator (if such emergency start of electric propulsion motors is provided), onboard ships where turbines are prime movers of the generators — start and reverse of each propulsion motor from its generator and both propulsion motors from one generator;

interlock of the starting device with the engine telegraph (if provided);

change of rotational speed of propulsion motors by means of change of rotational speed of prime movers.

2.4.7.2.4 Operational testing of the electric propulsion plant installed on board the ships with distinguishing mark **EPP** in the class notation shall be carried out in accordance with 2.4.7.2.2 and 2.4.7.2.3.

2.4.7.2.5 Operational testing of the electric propulsion plant being a part of a composite (hybrid) propulsive system (including on ships assigned the distinguishing mark **CPS** in the class notation) shall be carried out in accordance with 2.4.7.2.2 and 2.4.7.2.3.

2.4.7.3 Main and emergency sources of electrical power.

2.4.7.3.1 Main and emergency sources of electrical power (unless they are accumulator batteries) shall be checked together with prime movers at the maximum possible load of generators, not exceeding the nominal value.

Operation of propulsion motor being a part of a composite (hybrid) propulsive system (including ships assigned the distinguishing mark **CPS** in the class notation) shall be checked in generator operation mode together with the main engine.

2.4.7.3.2 During the test of the generator with driving engine, the following shall be checked:

allowable change limits of the prime mover no-load speed by the remote operation of the regulator from the main switchboard. The limits of change shall not be less than 20 % and not more than 10 % of the rated rotational speed;

operation of voltage regulator;

degree of commutator sparking in the direct-current machines and in the rings of the alternating-current machines with the loaded generator;

heating of bearings, which shall not exceed 80 °C for sliding bearings and 100 °C for roller bearings;

voltage variations at changing of the load from zero up to the maximum possible, voltage shall not vary by more than ±2,5 % of the rated voltage for the main generators, and by more than ±3,5 % of the rated voltage — for emergency alternating-current generators;

rotational speed variations and its restoration time at loading and unloading. Prompt change of rotational speed shall not exceed 10 % of rated speed, and the steady rotational speed shall not vary from the rated speed by more than 5 %. Time of achievement of the steady rotational speed shall not exceed 5 s;

voltage variations and its restoration time at the balanced load increases and drops. In this case, a sudden change in the balanced load of a generator running at rated speed and rated voltage, under given current and power-factor conditions, shall not cause a drop of voltage below 85 % or a rise above 120 % of the rated value. After the completion of transient processes, the generator voltage shall be restored within not more than 1,5 s with a deviation from the rated value being ±3 %. For emergency sets these values may be increased, respectively, to 5 s and ±4 % of the rated voltage.

With generators paralleled, the following shall be checked:

switching of generators to parallel operation;

distribution of active and reactive loads at increase and release of load on generators, being created by the ship consumers, within 20 % of the rated load up to the maximum possible load;

transfer of load from one generator to another;

minimum voltage protection and overload protection;

back power (for alternating-current generators) or back current protection (for direct-current generators).

Protection shall be actuated with not more than 10 s time delay when the back power or current values are not more than 2 — 6 % of their rated values for turbochargers and 8 — 15 % of their rated values for generators driven by internal combustion engines.

2.4.7.3.3 Emergency generator with the prime mover shall be checked as stated in 2.4.7.3.2 (excluding the parallel operation, distribution of loads, transfer of load and back power protection). Besides, the following shall be checked:

automatic and manual start, if provided (to be carried out 3 times each);

the total time of automatic start of diesel and loading of generator (shall not exceed 45 s);

unless an effective manual starting device is provided, the second power source of energy for conducting three additional starts during 30 min shall be checked;

automatic switching on the emergency consumers;

the possibility of electric power supply to consumers for regeneration of ship's power plant (if provided);

audible and visual signalling.

2.4.7.3.4 Where accumulator batteries are the main or emergency sources of electrical power, the following shall be checked:

correctness of installation, connecting and fixing of accumulator batteries;

serviceability and compliance with the requirements of lighting, heating and ventilation of a battery room;

direct purpose discharge during the regulated time in order to check the battery voltage and capacity;

charging at all the stages of charging current, no warming-up of the battery contacts and charging board;

actuating of back current protection (for electric machinery units);

automatic switching on the accumulator batteries, being an emergency (emergency intermediate) source of electrical power in case of absence of ship's power network voltage;

parallel operation of charging devices (if provided);

density and level of electrolyte in batteries;

blocking of forced ventilation and charging device;

condition of battery shelves and fixing of batteries;

condition of venting ducts and openings, warning notices;

condition of safe-type lighting fixtures.

Availability of the operation manuals for the batteries shall be checked.

2.4.7.4 Converting devices feeding essential consumers.

2.4.7.4.1 Static power converters.

During the testing of static power converters, the following shall be checked:

air cooling (self- or forced cooling);

protection, visual and audible alarm of exceeding of the maximum allowable cooling medium temperature at the system outlet for the converters with the forced cooling;

visual alarm of power circuits and control circuits switching on and off.

2.4.7.4.2 Rotary converters.

During the testing, the following shall be checked:

degree of the bearings' heating;

operation of starting and distribution devices.

2.4.7.4.3 Transformers.

During the examination of the transformers, the following shall be checked:

ventilation of the transformer rooms;

locking of the doors and interlocking of the disconnecting devices in transformer rooms.

During the operational testing, the heating under the load, produced by the ship consumers, and uniformity of phase load distribution shall be checked.

2.4.7.5 Distribution devices.

During the examination of main and emergency switchboards, power and light, section and group distribution switchboards, starting and control panels and charging devices, the following shall be checked:

condition of switching devices;

availability of the documents or stamps for calibration of electric meters, as well as the colour graduation lines on the scales of the devices taking the readings of the nominal parameters;

operation of all types of protection devices (except the short-circuit protection) in accordance with the required values contained in the electrical power generating and distribution circuits, as well as adequacy of application of the current and voltage settings in fuses;

condition of fixing the isolators of busbars and devices inside the switchboards.

For the purpose of revealing the defects in contacts of electrical connections in the electrical equipment, shipowners are recommended to perform infrared thermographic analysis of the electrical equipment.

2.4.7.6 Cabling.

2.4.7.6.1 During the examination of cabling and interference protection of radio reception, the following shall be checked:

condition of cables, panels, clips, pipes, packing boxes and glands in the cable penetration through the watertight and fire-resisting bulkheads and decks, sight port holes and drainage holes of cable pipelines, earthing of cable metal sheathing;

condition of offtake wire of lighting conductor, joining of its parts, connection with the ship's hull and flexible straps (in case of collapsible masts);

continuity and condition of electrical connections between the shielding sheathing of the cables, housing of the devices, machines, filters, distribution devices and the ship's hull.

During special surveys of ships of 25 years and over, diagnostics of cables and cable runs shall be carried out for determination of their technical condition to the extent agreed with the Register.

2.4.7.6.2 Watertight cable transits of ships contracted for construction on or after 1 July 2021.

2.4.7.6.2.1 The cable transit seal systems shall be surveyed by the RS surveyor or by a service supplier recognized by the Register to carry out inspections of such systems in accordance with Section 9, Part I "General Regulations for Technical Supervision" of RTSCS considering the provisions of Section 7, Part I "General Provisions" of these Rules.

2.4.7.6.2.2 The Cable Transit Seal Systems Register shall be reviewed in order to confirm that it has been properly maintained by the shipowner (responsible personnel of the crew). If the results of the verification are satisfactory, the survey performance shall be confirmed by appropriate entry made in the Cable Transit Seal Systems Register.

2.4.7.6.2.3 Where there are records entered since the last special survey of any repair, opening out/closing or alterations to the existing (installed) cable transits or installation of new cable transits and not submitted at annual surveys, the satisfactory condition of their seal systems shall be confirmed by satisfactory results of review of these records and examination of appropriate transits. The results of survey shall be recorded in the Cable Transit Seal Systems Register for each such cable transit.

2.4.7.6.2.4 In case where the special survey of the cable transit seal systems has been carried out by a recognized service supplier, the RS surveyor shall verify the availability of the record in the Cable Transit Seal Systems Register confirming that the survey has been carried out.

2.4.7.7 Electric drives of the essential devices and machinery and their monitoring, protection and control equipment.

2.4.7.7.1 Electric drives shall be operationally tested together with their starting-control and protection equipment, instruments and signalling under the load of machinery used for the intended purpose. In the electric drives the overload protection devices and zero protection shall be checked for compliance with the required parameters.

For electric drives with cage asynchronous motors at the first special survey, only their operational testing and external examination shall be carried out.

Electric drives of fire pumps shall be tested as to their overloading protection operated on the thermal or temperature relay principle; visual and audible overload alarm shall be tested.

The possibility of actuating fire and bilge pumps from the local control stations shall be tested in case of the remote shut-off circuit failure.

2.4.7.7.2 Electric drives of engine-and-boiler machinery.

The following shall be operationally tested:

performance of the starting control apparatus and protection devices, measuring instruments and alarms, machinery starting and stopping shall be conducted three times from each control station;

remote shut-off of the electric drives of fuel and oil transfer pumps, fuel and oil separators, ventilation and systems for sea pollution prevention;

operation of the electric drives of classed refrigerating plants, ventilation of spaces, emergency disconnection.

2.4.7.7.3 Electric drives and control of the steering gears shall be operationally tested for compliance with the requirements of the rules applicable to the particular ship.

At that, the following is performed:

putting the rudder (rudder nozzle) over of the main drive from 35° one side to 30° the other side and the opposite way. The time of the rudder putting over shall not exceed 28 s;

putting the rudder (rudder nozzle) over of the auxiliary drive from 15° one side to 15° the other side and the opposite way. The time of the rudder putting over shall not exceed 60 s.

The rudder putting over shall be carried out from each control station and by means of each type of control; the following shall be checked:

continuity of the steering gear operation, and where rudder electric drives are available, installed in two sets, their operation at every possible combination of the components;

correspondence of the readings of all the rudder indicators with the measuring staff of the mechanical indicator on the steering engine;

difference between the indicated and actual position of the rudder blade (rudder nozzle), which shall not exceed:

1° at the rudder (rudder nozzle) position in the longitudinal centre plane or parallel with it;

1,5° at the rudder (rudder nozzle) position angles from 0 up to 5°;

2,5° at the rudder (rudder nozzle) position angles from 5 up to 35°;

response of limit switches;

activation of visual and audible alarm of loss of voltage, break of phase and overload in the supply circuit, on loss of voltage in the control system circuit, minimum oil level in the service tank;

indication of electric motors of power unit steering gear operation.

2.4.7.7.4 Electric drives of anchor and mooring machinery.

The following shall be operationally tested:

idling at each speed and direction of rotation stipulated by the diagram;

simultaneous and separate paying out and heaving anchors by an electric drive during the anchorage. If two actuating electric motors are available, the said operations shall be carried out separately with each electric motor;

performance of electromagnetic brakes, emergency switch and zero protection;

operation of the electric drive during pulling the anchor into the hawse;

actuating of the electric drive protection and its possible stalling in "on" position.

2.4.7.7.5 Electric drives of boat winches.

The following shall be operationally tested:

paying out and heaving up of the boats with the electric drive and operation of brakes;

operation of control stations, limit switches, safety switches in the main current circuit and interlocking with the manual drive.

2.4.7.7.6 Electric drives of watertight and fire doors.

The following shall be operationally tested:

closing and opening of the doors from the local and remote control stations with the electric drive feeding from the main and emergency power sources;

warning visual and audible alarm for closing of the doors and its performance during the closing, as well as the door position indication.

2.4.7.8 Lighting.

Lighting and navigation lights shall be operationally tested, including:

operation of main and emergency lighting fixtures;

lighting in the boiler-and-engine room from all the feeders;

lighting of cargo holds, including the alarm on supply switchboards;

lighting of boiler water-level gauge glasses from the main and emergency lighting circuit;

lighting of boat embarkation places, outboard spaces and the places of life raft storage, emergency exits;

remote switching off of the external lighting from the bridge;

serviceability of portable lighting;

operation of navigation lights from two separate feeders of switchboard supply — main and standby;

correspondence of lamps to the navigation lanterns' certificate data;

operation of standby navigation lanterns;

visual and audible alarm of navigation light switch in case of failure of any light;

on passenger ships and ferries the performance of low-set lighting shall be checked;

condition and operation of the explosion-proof lighting fixtures including the work of interlocking and alarm.

2.4.7.9 Electrical cooking and heating appliances.

During the examination, the following shall be checked:

condition of electrical protection;

availability of fire-fighting insulation or sufficient air gaps between the heating appliances and combustible structures;

availability of protective enclosures excluding placing of foreign objects on them.

2.4.7.10 Electrical equipment and cables in dangerous spaces and areas.

2.4.7.10.1 Dangerous spaces and areas as well as classification of dangerous zones are given in 2.9, 19.2, 19.3 and 19.11 of Part XI "Electrical Equipment" of the Rules for the Construction and Classification of Sea-Going Ships. During inspections, provisions of IEC 60079-17:2013 shall be met.

2.4.7.10.2 During examination, in addition to the requirements of 2.4.7.6, the following shall be checked:

condition of cable on the catwalk and compensation devices;

availability and condition of earthing of cargo pipelines, rigging of masts, explosion-proof equipment, vent pipes;

integrity of protective casings, gratings, housings of electrical equipment, glasses of explosion-proof lighting fixtures, external protective cable sheathing;

interlocks ensuring the possibility of electrical equipment connecting or admission of the personnel after the sufficient ventilation of the room;

interlocks excluding connection of portable electrical equipment under voltage;

tightness of cable conduit if a cable gland lead-in is provided by the design;

availability and serviceability of earthing.

2.4.7.10.3 Scope of special survey of electrical equipment and cables installed in oil and chemical tankers as well as gas carriers shall include the scope of annual survey specified in 2.2.7.10. The RS surveyor may require function testing if defects are found or suspected.

2.4.7.10.4 Additionally, at special survey, the insulation monitoring with alarm shall be tested and Megger testing of power circuits shall be carried out. Megger testing in gas dangerous spaces may involve risk of explosion due to sparks.

2.4.7.11 Alarm and internal communication devices.

2.4.7.11.1 Electric engine room telegraphs, tachometers.

The following shall be operationally tested:

operation of engine room telegraphs from each station, correspondence of their readings at the bridge and in the engine room, alarm;

interlocking of the room telegraph with the main engine control station (if provided);

illumination of dials of control equipment;

availability of the communication means between the rudder control station at the bridge and the manual steering gear compartment;

operation of tachometers (when the propulsion plant is in operation) and correspondence of their readings at the bridge with the actual schedule of the propeller shaft rotation.

2.4.7.11.2 Internal service communication.

The following shall be operationally tested:

visual and audible alarm calling devices;

audibility and intelligibility during the conversations.

2.4.7.11.3 General alarm system.

Audibility of sound devices in all the spaces shall be operationally tested. In the spaces with high intensity noise the test of visual and audible alarm shall be carried out with the running machinery. The electrical sound signal means shall be checked (whistle, bell, gong, etc.).

2.4.7.11.4 Fire detection and fire alarm system.

The following shall be checked:

operation of detectors of automated fire detection system (at least 10 % of all the installed detectors shall be checked but not less than one detector in each section);

operation of all manual detectors;

operation of visual and audible alarm of fire detection system in case of disconnecting of main and reserve power supply, the circuit discontinuity, earthing and actuating from the detector;

operation of smoke fire detection automatic system carried out by check of actuating the station from all the protected spaces;

work of the main and reserve fans in the power supply of smoke fire detection automatic system, including their automatic change-over and sound alarm;

availability of the document issued by the competent body confirming regulated data performances of fire alarm indicators, or the ship's report on their check by means of special arrangements.

2.4.7.11.5 Warning alarm of extinguishing system release.

Interlocking and warning signal, as well as visual and audible alarm with the warning marks "Gas! Go away!" shall be operationally tested.

2.4.7.11.6 Signalling in engineers' accommodation spaces.

The sound signalling system for the call of the engineer shall be checked.

2.4.7.11.7 Indication of closure of watertight and fire doors.

Signalling of door condition shall be tested at the door control stations.

2.4.7.11.8 Personnel alarm.

Schedule of monitoring of the machinery space personnel condition shall be checked, which shall not exceed 30 min, and transmittance of the sound alarm signal to the navigating bridge and engineers' service spaces shall be checked, if the signal is not acknowledged within 3 min.

2.4.7.11.9 Release indication of fixed local application fire-fighting system.

Visual and audible alarm of release of the system both in the protected space and at the permanently attended control stations shall be checked. Where several systems are installed, the indication system shall clearly indicate the particular system activated.

2.4.7.11.10 Indication of door position in ro-ro passenger ships and ro-ro cargo ships.

Visual and audible alarm shall be checked in the following cases:

if the door is not fully closed; or not fully locked; or

at least one securing device is open or a locking device is unsecured.

Proper audible alarm on the navigation bridge panel shall be checked if the ship leaves harbour with the doors not closed or locked.

Proper visible indication on the navigation bridge panel shall be checked as well as the possibility for accidental or unauthorized turning off the indicator light shall be excluded.

For ro-ro passenger ships, besides the indicator system for door position, the television surveillance system and water leakage detection system shall be tested in operation including proper indication and proper audible alarm of leakage through the inner, side shell and stern doors on the navigation bridge panel and on the main machinery control room panel.

For ro-ro cargo ships, the television surveillance of water leakage through side shell and stern doors provided from the navigation bridge shall be tested in operation.

During monitoring of bow door and inner bow door position and their securing devices, the television surveillance system shall be tested in operation including proper indication on the navigation bridge monitor and on the main machinery control room monitor.

The lighting and contrasting colour of objects under surveillance shall be checked.

Audible and visual alarm on the navigation bridge shall be checked for the high water level alarm in the sump — between the bow door and the ramp, or where no ramp is fitted, for alarm of water level exceeding 0,5 m in the area between the bow door and the inner door, depending on the type of structure.

For ro-ro passenger ships on international voyages, the special category spaces and ro-ro spaces (in the absence of continuous patrolling or other effective means of monitoring) shall be monitored by means of television surveillance, so that any movement of vehicles in adverse weather conditions or unauthorized access by passengers thereto, can be detected whilst the ship is underway.

2.4.7.11.11 Sewage holding tanks level alarm.

Audible and visual alarm at the stations with permanent watch in case the tank is filled by 80 % shall be checked.

2.4.7.12 Fault detection, repair and testing of electrical equipment shall be carried out according to the procedures and recommendations of the equipment manufacturers, in the absence thereof or inability to use them — on the process instructions adopted on a shiprepair yard, and agreed with the RS surveyor. The standards or recommended instrumentally controlled parameters describing the technical condition of the electrical equipment are contained in the manufacturer's documentation (technical files, operation manuals, etc.), these Rules and the Guidelines, reference and other normative-technical documentation.

2.4.7.13 Survey of electrical equipment during repair.

2.4.7.13.1 Survey of electrical equipment shall be performed according to the schedule determined by the RS surveyor, at that a report on verification of repaired equipment and/or its separate components drawn-up by the shiprepair yard or ship administration (ship's crew) shall be submitted to the RS surveyor.

2.4.7.13.2 All types of electrical equipment, its components, accessories, materials, etc. which, after their installation, completion works, use, etc. are inaccessible for survey, shall be submitted to the RS surveyor at a stage when the survey is still possible.

2.4.7.13.3 Regardless of the previous surveys results the RS surveyor may require repeated survey or additional examinations, tests, inspections, measurements.

2.4.7.14 Testing of electrical equipment after repair.

2.4.7.14.1 The extent of testing is determined by the ship repair yard and shall be agreed with the RS surveyor. Generally, mooring trials extent is sufficient.

2.4.7.14.2 After repair or replacement of electric propulsion motors, main and auxiliary generators, it is recommended to perform mooring and sea trials.

2.4.7.14.3 Technical documentation on electrical equipment (technical files, technical descriptions, passports), programs and methods of electrical equipment testing, and documents covering previous tests results (if any) shall be submitted to the RS surveyor prior to commencement of the testing.

2.4.7.14.4 After installation of the repaired electrical equipment on board the ship, correctness of equipment installation, accuracy and reliability of the protective earthing, insulation resistance, if necessary — availability and reliability of protection guards shall be checked.

2.4.7.14.5 The insulation resistance of new or repaired electrical equipment shall not be less than that specified in Section 10 of the Guidelines on Technical Supervision of Ships under Construction.

For electrical machines and transformers with the rated power of more than 1000 kW (kVA) or with the rated voltage of more than 500 V, the insulation resistance in heated condition shall not be less than that calculated by the formula

$R = \frac{3U_{rated}}{P_{rated}+1000}$, in MOhm

2.4.7.14.6 The electrical equipment connected directly to the ship's machinery, arrangements and systems shall be tested as far as practicable simultaneously with these machinery, arrangements, systems when they are subjected to testing for the intended purpose.

2.4.7.14.7 Where full disassembly (dismantling) of machines with removal of coils, rewinding, etc. has been carried out on board the ship, the high voltage test shall be carried out by the test voltage of at least 75 % of the test voltage specified for this type of winding for new machines.

2.4.8 Automation equipment.

2.4.8.1 General.

2.4.8.1.1 Annual and special surveys of the automation equipment are performed together with the survey of automated machinery, devices and systems.

2.4.8.1.2 The list of automation equipment, its design, arrangement, installation and technical specifications shall be checked to meet the requirements of the Rules for Construction.

2.4.8.1.3 Replacement of separate types of automation equipment by the equipment of different type, and additional installation of new automation equipment shall be confirmed by the appropriate Register documents stipulated by the Rules for Construction.

2.4.8.1.4 The survey of pneumatic, hydraulic and electric appliances being part of automation equipment shall be performed in accordance with 2.4.5 — 2.4.7.

2.4.8.1.5 When defects are found in the automation equipment preventing the normal and safety operation of the machinery installation, the Register may decide to prohibit the use of the faulty equipment and operation of the machinery installation in the automatic mode until the equipment is operable or to exclude the automation mark from the class notation of the ship. In case the automation mark is excluded from the class notation, the machinery installation shall be provided with the minimum number of alarm and protection appliances as

required by the Rules for Construction for non-automatic plants. The basis for the above is formed by the failures of the following systems:

remote automated control of main and auxiliary machinery providing the running of main propulsion plant;

protection, control and alarm of main and auxiliary machinery as to provide the running of main propulsion plants.

2.4.8.1.6 The automation mark may be excluded from the class notation of the ship after the relevant application of the shipowner and submission of the documents for the Register review, confirming technical impossibility of the machinery installation operation in the automatic mode.

2.4.8.1.7 The summarized scope of the automation equipment surveys is given in Table 2.1.1-1 of Part II "Survey Schedule and Scope".

2.4.8.1.8 Monitored parameters, measuring points, limiting values of parameter, types of automatic protection and parameter indication in the main machinery control room of the automated main propulsion plants, automated boiler plants, automated electric power plants, automated compressor, bilge and refrigerating plants, as well as plants and systems for ships having the automation mark **AUT3** in the class notation are given in 2.4.8, Part II "Carrying Out Classification Surveys of Ships" of the Guidelines.

2.4.8.1.9 It is permitted to carry out surveys within the scope of the available special programme intended for the particular ship design and approved by the Register.

2.4.8.1.10 Prior to survey the cargo systems shall be degassed.

2.4.8.2 Complex automation systems.

2.4.8.2.1 Prior to the survey of the complex automation system the technical documentation for the automation equipment comprising control, regulation, monitoring, protection, signalling, indication systems and a system for recording ship's technical appliances, shall be submitted by the shipowner for familiarization with the automation equipment available onboard the ship.

2.4.8.2.2 Automation equipment (control, regulation, monitoring, protection, signalling, indication systems and a system for recording of ship's technical appliances) shall be examined and operationally tested with the checking of:

correctness and accuracy of the machinery functioning;

correctness of interaction between the interdependent automation systems;

operability of automatic protection system;

the possibility of operation of the systems at changing of power supply parameters;

automatic starting of standby machinery and devices and putting the running machinery and devices out of operation;

loading and unloading in the regulation systems;

efficiency of the circuits as to prohibit passing of alarm signals at start and normal stop of machinery and devices (where provided).

2.4.8.3 Centralized monitoring systems.

Centralized monitoring systems shall be examined and operationally tested with the check of the following:

efficiency of regulated monitoring and self-monitoring devices;

serviceability of the illuminated indicator boards and sound signalling;

the possibility of operation at changing of power supply parameters;

correctness of actuating for each controlled parameter with the simultaneous check of the general alarm system;

actuating of alarm system at loss of power supply;

actuating of alarm system at the failures in the centralized monitoring system;

correctness of functioning of the mimic diagrams;

call of controlled parameters (digital and analog monitoring) on the displays.

2.4.8.4 Machinery installation automation systems.

2.4.8.4.1 Remote control and remote automatic control systems of main machinery shall be examined and operationally tested with the check of the following:

start and stop of the main machinery from the wheelhouse;

reversing;

control at the alarm system switched off with maintenance of monitoring according to constantly operating instruments;

operability of the automatic protection;

operability of remote automatic control systems at de-energizing of the ship and the subsequent regeneration of voltage in the ship's network;

automatic performance of intermediate operations;

possibility of occurrence of inadmissible operation modes (spontaneous increase of number of revolutions, self-start, spontaneous reverse of main machinery), if remote automatic control fails.

The following shall be also checked:

urgent stop device;

efficiency of interlocking;

control change-over between the stations with checking of the relevant alarm.

2.4.8.4.2 Systems of the CPP remote automatic control shall be examined and operationally tested with the check of:

CPP-related functions listed in 2.4.8.4.1;

time and speed of pitch adjustment;

devices limiting the speed of blade adjustment in increasing the propeller pitch in order to exclude the engine overload.

2.4.8.4.3 The boiler plants shall be examined and operationally tested with the check of:

protection of the boiler at flame failure;

protection on extremely low water level in the boiler drum;

protection on air pressure drop at furnace inlet;

remote switching-off of the furnace inlet.

2.4.8.4.4 Prime movers for the generator drive shall be examined and operationally tested with the check of:

remote start and stop;

automatic start of the standby engine at overload of the running one;

automatic distribution of load at the parallel operation of the units (if provided);

operational integrity of automatic protection;

maintenance of spinning reserve (if provided).

2.4.8.4.5 The automation equipment of compressors shall be examined and operationally tested with the check of:

protection on oil pressure;

protection on air temperature at outlet of compressor;

air pressure when the compressor is automatically started and stopped.

2.4.8.4.6 Automation equipment of fuel and oil separators shall be examined and operationally tested with the check of protection and alarm provided depending on the separator type. The alarm in the bilge tanks of separator units shall be also checked.

2.4.8.5 General ship automation systems.

General ship automation systems shall be examined and operationally tested with the check of:

remote and automatic start of bilge pumps with alarm of running of pumps and position of valves;

remote closing and opening of valves;

automatic control of valves;

correctness of alarm in the mimic diagrams;

alarm of open or closed condition of the fittings.

2.4.8.6 Regulation, monitoring, protection and alarm systems.

Regulation, monitoring, protection and alarm systems shall be examined and operationally tested together with the automation systems indicated in the present Chapter.

2.4.8.7 Automation devices.

2.4.8.7.1 Automation devices (regulators, sensors, signalling devices) shall be examined (where accessible) and operationally tested together with the machinery, devices and systems indicated in this Section. Additional instructions on survey of automation equipment are given in the internal normative documents on repair intended for the use of RS surveyors.

2.4.8.8 Survey of automation equipment during repair.

2.4.8.8.1 The automation equipment delivered on a ship for replacement and spare parts for repair of such equipment shall have documents confirming technical supervision carried out by the Register (or ACS on behalf of the Register) during their manufacture.

2.4.8.8.2 Preliminary (prior to installation on board) verification and adjustment of automation components, devices and systems on special test benches and simulators is recommended,

2.4.8.8.3 Where the pneumatic and/or hydraulic pipes of automation systems have been separated or replaced during repair, they shall be carefully cleaned prior to connection and after tests (refer to 2.4.8.8.4).

2.4.8.8.4 After connection, the pneumatic and hydraulic pipes (including pulse piping) of automation equipment shall be subjected to hydraulic pressure tests.

2.4.8.9 Testing of automation equipment after repair.

2.4.8.9.1 After repair, all the automation equipment shall be subjected to the tests in accordance with the program approved by the Register and in the presence of the RS representative. The test program shall contain at least the following:

extent (scope) and sequence of tests;

test conditions;

test parameters (standards);

duration of test modes;

frequency of measurements;

criteria of equipment operability;

list of applied testing equipment and measuring instruments.

2.4.8.9.2 Testing equipment shall be supplied form the ship's mains.

2.4.8.9.3 Instrumentation and measuring equipment shall have documents or brands certifying timeliness of verification by the competent body.

2.4.8.9.4 All the automation systems and devices shall operate trouble-free in modes specified by the technical documentation and test program; along with that, the servicing conditions of the machinery installation shall fully comply with the distinguishing automation mark in the class notation of the ship.

During testing, the following shall be checked:

proper and smooth functioning of the machinery with verification of the sequence of control operations;

agreement between the actual time of operation performance with the required one;

proper interaction between various automation systems.

2.4.8.9.5 Evaluation of test results of automation systems and devices shall be made subject to the condition that the automation equipment is an integral part of the automated item itself of the ship's machinery installation.

2.4.8.9.6 The operability of the automation systems shall be confirmed by the tests:

for operability of automatic safety systems (by means of variation of the real physical value of the parameter to be protected);

for load surge and load shedding relief in the regulation systems where the static and dynamic irregularity shall be determined; along with that, the extreme values of parameters, as well as insensitivity and time of the transient processes shall not fall outside the set limits specified by the Register standards or shall be consistent with the technical-normative documentation agreed with the Register;

for the capability of system functioning with deviations from the nominal values of the power supply parameters under shipboard conditions (when powerful consumers are activated, etc.);

for effectiveness of the operational and self-monitoring devices of the automation equipment (simulation of the control and monitoring channel troubles);

for check of the main machinery remote control in operation with verification of the proper functioning of changeover devices of all control stations in all specified changeover modes. Along with that, it is necessary to check the operation of the control station indicator, interlocking facility (impossibility of control from several stations simultaneously), as well as the system operation process when control is changed over from one station to another;

for proper functioning of the signal passage inhibition circuits in case of starting and normal stopping of the machinery (where specified);

for proper functioning of the mnemonics notifying of the execution of orders immediately before the relevant items are placed into service;

for check of the manual control for the entire automated and remotely controlled equipment in operation having regard to the requirements of 2.3.4 and 2.3.5, Part XV "Automation" of the Rules for the Classification and Construction of Sea-Going Ships;

for automatic starting of the stand-by machinery and removal of the running machinery from service (by creating real conditions affecting the starting and stopping control circuits of these machinery — where provided);

for redundancy of the power supply and for conservatism of the system or fail-safety in the event of loss of power supply.

2.4.8.9.7 All defects of the machinery, devices and equipment detected during the tests shall be eliminated before the survey is credited as complete.

2.4.8.9.8 Additional instructions on testing of individual systems and automation devices are given in Section 12 of the Guidelines on Technical Supervision of Ships under Construction.

2.4.8.10 Dynamic positioning system (DP-system).

Survey of DP-systems shall include examination and operational testing of all its components, and generally the checking of DP-system capability to maintain position of the ship with prescribed accuracy corresponding to the distinguishing mark **DYNPOS** in the ship's class notation, as well as in case of any failure as defined by failure mode and effects analysis (FMEA).

The insulation resistance of cabling, electric drives and control panels shall be measured.

The parameters shall be tested, checked and measured in accordance with Section 12 of the Guidelines on Technical Supervision of Ships under Construction. If during the survey some of the DP-system equipment affecting the system operability is found inoperative, the distinguishing mark **DYNPOS** shall be excluded from the ship's class notation about which an entry is made in the Classification Certificate.

2.5 SURVEY OF THE OUTSIDE OF THE BOTTOM OF SHIPS AND OFFSHORE INSTALLATIONS

2.5.1 General provisions.

2.5.1.1 Provisions of this Chapter shall apply to all ships and floating facilities (hereinafter referred to as "the ships") under the RS class.

Exceptions are MODU and FOP (other than those specified in 2.5.5.3), inland navigation ships (for European inland waterways), small craft as well as pleasure craft including yachts, for which the schedule and procedures for survey of the outside of the ship's bottom (hereinafter referred to as "the bottom survey") are specified in Section 19, Part III "Additional Surveys of Ships Depending on their Purpose and Hull Material" of these Rules (for MODU and FOP), in the Rules for the Surveys of Inland Navigation Ships in Service (for European Inland Waterways), Rules for the Classification and Surveys of Small Craft, Rules for the Classification and Construction of Pleasure Craft, Guidelines on the Classification and Survey of Yachts.

2.5.1.2 This Chapter covers requirements for schedule, procedures and scopes of survey of the outside of the ship's bottom and related items[1] (for the purposes of this Chapter, hereinafter referred to as "the ship's bottom").

2.5.1.3 The bottom survey shall be carried out to verify whether the technical condition of the following items complies with the requirements of these Rules:

underwater hull;

sea inlets, bottom and side valves;

underwater parts of rudder and steering gears;

shafting, propellers and AMSS;

parts of navigational equipment in the underwater hull;

other items of technical supervision, which survey shall normally be carried out with the ship in a dry dock[2].

2.5.1.4 Requirements for intervals and scope of surveys of shafting, propellers, propulsion and main AMSS are given in 2.11.

2.5.1.5 Additional instructions on carrying out bottom surveys for oil tankers, bulk carriers and chemical tankers (hereinafter referred to as "the **ESP** ships") as well as for particular types of general dry cargo ships are given in Sections 2 — 7, Part III "Additional Surveys of Ships Depending on their Purpose and Hull Material".

2.5.1.6 The necessity and procedures for occasional bottom surveys, as the case may be (for example, after an emergency occurrence, at special survey extension, etc.), shall in each case be reviewed by RHO.

2.5.1.7 Application of provisions of this Chapter to ships owned or chartered by governments and used as combat or support ships in military operations, shall in each case be reviewed by RHO.

2.5.1.8 The decision on each performance of an in-water survey in lieu of bottom survey in dry dock, where stipulated by these Rules, shall be taken based on the following:

.1 a ship or offshore installation has a distinguishing mark **IWS** in the class notation (refer to Section 12, Part XVII "Distinguishing Marks and Descriptive Notations in the Class Notation Specifying Structural and Operational Particulars of Ships" of the Rules for the Classification and Construction of Sea-Going Ships);

.2 repair of items of technical supervision of the ship's bottom is not required;

---

[1] "Related items" means those items, which may only be surveyed when the ship is in a dry dock. For oil tankers, chemical tankers and gas carriers this may mean that the ship shall be specially prepared, for example, by being cleaned and gas-freed. In this case, the internal examination of cargo tanks may be undertaken simultaneously with the bottom survey.

[2] "Ship in a dry dock" means that the ship is in a dry dock, on pontoon deck of floating dock, on a slipway, or that any other method of the ship's bottom drainage agreed with the Register was applied for survey.

.3 no details on damaged ship's bottom and/or propeller-rudder system are available;

.4 no details on the areas of substantial corrosion in the ship's bottom are available. Generally, this applies to ships more than 10 years of age, but it may also be related to ships of 10 years of age and less, where such information is available;

.5 effective corrosion prevention system of the underwater hull is provided;

.6 where at bottom survey in question, the prescribed surveys and/or maintenance of shafting or main AMSS are not required (refer to 2.11, in particular, 2.11.2.9 and 2.11.8 relating to survey extension);

.7 where it is not possible to survey FPU, MODU, FOP or other offshore installation in dry dock according to the design documentation, Classification Certificate;

.8 if so agreed with Flag State MA, unless otherwise stated in the MA instructions or agreement between that MA and RS (for ships having the Cargo Ship Safety Construction Certificate or Cargo Ship Safety Certificate or Passenger Ship Safety Certificate in compliance with the provisions of SOLAS 74, as amended, as well as other international codes which prescribe bottom survey);

.9 shipowner shall be notified that the in-water survey shall provide the information on the ship's bottom condition normally obtained based on the dry dock survey results (refer to 2.5.7);

.10 when conducting the in-water survey, the following conditions shall be observed: sheltered water (preferably with no or weak tidal streams and currents), in-water visibility and the cleanliness of the hull below waterline are clear enough to permit meaningful examination (the method of water clarity test using Secchi disk may apply, i.e. the depth where the white disk 300 mm in diameteris no longer visible shall be at least 2 m);

.11 performance of in-water survey in lieu of bottom survey in dry dock shall not be allowed on a continuous regular basis;

.12 where the distinguishing mark **IWS** in the class notation is not assigned, the possibility of clearance measurements in steering gear bearings (rudder stock and rudder pintle) shall be additionally provided;

.13 performance of in-water survey in lieu of bottom survey in dry dock is not allowed in the following cases:

at special surveys of ships covered by the requirements of Sections 2 — 8, Part III "Additional Surveys of Ships Depending on their Purpose and Hull Material";

at intermediate surveys of ships over 15 years of age, covered by the requirements of Sections 2 — 6, Part III "Additional Surveys of Ships Depending on their Purpose and Hull Material".

2.5.2 Ship groups.

Depending on the intervals between bottom surveys, the ships and offshore installations are divided into following groups:

group 1: all ships not related to groups 2 and 3;

group 2: passenger ships:

dynamically supported craft and high-speed craft;

wooden or composite ships;

ships normal operation of which provides grounding;

group 3: steel and reinforced concrete berth-connected ships;

ships designed for navigation in fresh waters only;

ships designed for navigation in confined port waters only;

non-self-propelled ships;

floating facilities designed for long-term positioning on the seabed;

berth-connected passenger ships;

berth-connected nuclear floating facilities.

2.5.3 Group 1 ships. Survey schedule and procedures.

2.5.3.1 There shall be a minimum of two bottom surveys during each five-year RS class period.

One such survey shall be carried out in conjunction with the special survey for renewal of the Classification Certificate (class renewal survey) and may be carried out starting from the fourth annual survey, i.e. 15 months before the due date of special survey. In any case, such survey shall be completed not more than 15 months before the actual date of special survey completion. Otherwise, it cannot be accepted as a class renewal survey.

The second (hereinafter referred to as "the intermediate") bottom survey may be carried out at any time between the special surveys, unless otherwise specified. However, the shipowner is recommended to schedule such bottom survey at the second or third annual survey for confirmation (endorsement) of the Classification Certificate or within the period between such surveys to avoid additional bottom survey to be carried out because of survey completion before the due date.

The intermediate bottom survey for **ESP** ships over 10 years of age shall be carried out in conjunction with each intermediate survey in accordance with Sections 2 — 6, Part III "Additional Surveys of Ships Depending on their Purpose and Hull Material".

The intermediate bottom survey for particular general cargo ships over 15 years of age shall be carried out in conjunction with each intermediate survey in accordance with Section 7, Part III "Additional Surveys of Ships Depending on their Purpose and Hull Material".

2.5.3.2 In all cases the interval between any two such bottom surveys shall not exceed 36 months. An extension of bottom survey of three (3) months may be granted in accordance with 2.5.3.5.

2.5.3.3 Unless otherwise provided by these Rules, the bottom survey shall be carried out with the ship in a dry dock.

2.5.3.4 Performance of in-water survey in lieu of bottom survey in dry dock.

2.5.3.4.1 Notwithstanding the provisions of 2.5.3.3, upon the shipowner's written request, one bottom survey (except for ships specified in 2.5.1.8.13) may be carried out during five-year RS class period as an in-water survey according to 2.5.8 as alternative to bottom survey in dry dock. Such decision shall be made in accordance with 2.5.1.8.

2.5.3.4.2 Review of the matters relating to performance of in-water survey in lieu of bottom survey in dry dock shall be within the competence of:

for self-propelled ships over 100 gross tonnage — RS Technical Committee (TC);

for self-propelled ships of 100 gross tonnage and less and all non-self-propelled ships — RS Branch Office which will perform the relevant survey of the ship, or in case of the absence of the request for survey — RS Branch Office which is located in the area of permanent operation of the ship.

2.5.3.5 Extension of bottom survey.

2.5.3.5.1 An extension of bottom survey may be granted at extension of special survey in accordance with 2.4.1.4.10, and at extension of the interval between bottom surveys (which is not connected with extension of special survey) for more than 36 months in accordance with 2.5.3.2.

2.5.3.5.2 Three month extension of bottom survey beyond 36 months as specified in 2.5.3.2 may be granted upon the shipowner's written request, in case of special/exceptional circumstances, as well as at satisfactory results of occasional survey[1].

---

[1] It shall be noted that extension of survey of the outside of ship's bottom for the ship having the Cargo Ship Safety Construction Certificate or Cargo Ship Safety Certificate in compliance with the provisions of SOLAS 74, as amended, is not permitted without the relevant authorization/instruction of the Flag State MA.

2.5.3.5.3 The matter relating to the extension of bottom survey, the assignment of conditions and determination of scope of occasional survey shall be in each case within the competence of:

for ships over 100 gross tonnage — RHO;

for ships of 100 gross tonnage and less — RS Branch Office which will perform the relevant survey of the ship, or in case of the absence of the request for survey — RS Branch Office which is located in the area of permanent operation of the ship.

2.5.3.5.4 If the requirements of 2.5.3.5.2 apply, the bottom survey extension may be granted provided the following conditions are met:

the shipowner has submitted documentary evidence of special/exceptional circumstances;

repair/maintenance of items of technical supervision of the ship's bottom is not required;

no details on damaged ship's bottom are available;

at prescribed bottom survey the surveys and/or maintenance of shafting or main AMSS are not required.

2.5.3.5.5 Where at extension of the bottom survey, the extension of normal survey of shafting or main AMSS is also scheduled, the issue related to the extension of normal survey of shafting or main AMSS shall be primarily considered as well as their survey in accordance with 2.11 shall be primarily carried out.

2.5.3.5.6 The occasional survey as required by 2.5.3.5.2 shall at least include the following:

overall survey of the ship's bottom structures and devices accessible from inside, upon the results of which it is possible to confirm compliance of the ship's bottom technical condition with these Rules;

review of ship's log records to make sure that there is no information on possible damages in the ship's bottom obtained during the previous bottom survey.

If upon the results of completed occasional survey it is not possible to confirm compliance of the ship's bottom technical condition with these Rules, the RS surveyor may require performance of in-water survey in accordance with 2.5.8 in full of partial scope.

2.5.3.5.7 The possibility of bottom survey extension shall be finally decided by the RS Branch Office which performed the occasional survey.

2.5.4 Group 2 ships. Survey schedule and procedures.

2.5.4.1 Passenger ships.

2.5.4.1.1 The ship's bottom shall be surveyed annually. Such surveys shall be carried out in conjunction with each periodical survey for confirmation/renewal of the Classification Certificate and/or Passenger Ship Safety Certificate[1].

2.5.4.1.2 There shall be a minimum of two bottom surveys in dry dock during each five-year RS class period.

One such survey shall be carried out in conjunction with the special survey for renewal of the Classification Certificate and/or Passenger Ship Safety Certificate and be completed not more than 3 months before the due date of special survey. In any case such survey shall be completed not more than 3 months before the actual date of special survey completion. Otherwise, it cannot be accepted as a class renewal survey.

Upon agreement with RHO, the bottom survey in dry dock carried out at the fourth annual survey (15 months before the due date of special survey) may be accepted at special

[1] Consideration shall be given to ships having Passenger Ship Safety Certificate issued in accordance with SOLAS 74/78 and for ships having Certificate Dynamically Supported Craft Construction and Equipment issued in compliance with the provisions of the Code of Safety for Dynamically Supported Craft, the bottom survey shall be carried out in conjunction with each survey for renewal of appropriate certificate. For ships having High-Speed Craft Safety Certificate issued in compliance with the provisions of the International Code of Safety for High-Speed Craft, the bottom survey shall be carried out in conjunction with each periodical survey for confirmation or renewal of the certificate.

survey provided the in-water survey in accordance with 2.5.8 confirms the compliance of the ship's bottom with these Rules. In case of this provision application it is necessary to note that the bottom survey in dry dock shall be completed not earlier than 15 months before the actual date of special survey completion. Otherwise, it cannot be accepted as a class renewal survey.

The second intermediate bottom survey in dry dock shall be carried out at the second or third annual survey and, if applicable, at intermediate survey for confirmation of the Classification Certificate and Passenger Ship Safety Certificate.

The other three annual bottom surveys shall be carried out within the windows of the appropriate annual surveys for confirmation of the Classification Certificate and Passenger Ship Safety Certificate. Such surveys may be carried out as in-water surveys in accordance with 2.5.8 without RS additional confirmation[1].

2.5.4.1.3 Upon the shipowner's written request and upon agreement with RHO, for passenger ships other than ro-ro passenger ships, the number of bottom surveys in dry dock may be reduced to a single one within the 5-year class period provided such a single bottom survey in dry dock is carried out in conjunction with the special survey, and the interval between any two such surveys does not exceed 60 months[2].

The shipowner shall forward the request on application of this provision to RHO before the forthcoming due date of the bottom survey in advance.

The matter relating to the extension of dry docking period up to 60 months shall be in each case within the competence of:

for ships over 100 gross tonnage — RHO;

for ships of 100 gross tonnage and less — RS Branch Office which will perform the relevant survey of the ship, or in case of the absence of the request for survey — RS Branch Office which is located in the area of permanent operation of the ship.

The dry docking period may be extended up to 60 months provided the following conditions are met: repair/maintenance of items of technical supervision of the ship's bottom is not required; no details on damaged ship's bottom are available; at annual in-water surveys, the prescribed surveys and/or maintenance of shafting or main AMSS are not required.

2.5.4.2 Dynamically supported craft, high-speed craft, wooden and composite ships.

2.5.4.2.1 Unless otherwise provided by these Rules, the bottom surveys shall be carried out annually in a dry dock. Such surveys shall carried out in conjunction with each periodical survey for confirmation or renewal of the Classification Certificate[3].

2.5.4.2.2 Notwithstanding the provisions of 2.5.4.2.1, for high-speed craft of 10 years of age and less, as well as for composite ships, the annual dry dock survey may be substituted by the in-water survey in accordance with 2.5.8 upon the shipowner's written request subject to the review by RHO in each case. Such decision shall be made in accordance with 2.5.1.8.

---

[1] Consideration shall be given to ships more than 15 years of age and having Passenger Ship Safety Certificate issued in compliance with the provisions of SOLAS 74/78, the in-water survey in lieu of bottom survey in dry dock may only be carried out upon agreement with MA unless otherwise provided by the MA instructions or by agreement between MA and RS.

[2] Consideration shall be given to ships having Passenger Ship Safety Certificate issued in compliance with the provisions of SOLAS 74/78, the interval between surveys in dry dock may be extended up to 60 months in accordance with IMO circular MSC.1/Circ.1348 only upon agreement with MA unless otherwise provided by the MA instructions or by agreement between MA and RS.

[3] Consideration shall be given to ships having Passenger Ship Safety Certificate issued in accordance with SOLAS 74/78 and for ships having Certificate Dynamically Supported Craft Construction and Equipment issued in compliance with the provisions of the Code of Safety for Dynamically Supported Craft, the bottom survey shall be carried out in conjunction with each survey for renewal of appropriate certificate. For ships having High-Speed Craft Safety Certificate issued in compliance with the provisions of the International Code of Safety for High-Speed Craft, the bottom survey shall be carried out in conjunction with each periodical survey for confirmation or renewal of the certificate.

2.5.4.3 Ships in NAABSA regime.

2.5.4.3.1 The ability of the ship to operate in NAABSA regime shall be confirmed by RHO based on appropriate technical background with the relevant record made in the Classification Certificate and List of Survey's Status.

2.5.4.3.2 Bottom surveys shall be carried out annually. Such surveys shall be carried out in conjunction with each periodical survey for confirmation or renewal of the Classification Certificate.

2.5.4.3.3 The minimum of two bottom surveys shall be carried out during each five-year RS class period. One such survey shall be carried out in conjunction with the special survey for renewal of the Classification Certificate (class renewal survey) taking into account the provisions of 2.5.3.1.

The second (intermediate) bottom survey in dry dock shall be carried out at the second/third or, if applicable, at intermediate survey for confirmation of the Classification Certificate.

The other three annual bottom surveys shall be carried out as in-water surveys according to 2.5.8 with the relevant record made in the List of Survey's Status.

2.5.4.3.4 The performance, upon the shipowner's written request, of an in-water survey according to 2.5.8 in lieu of the second (intermediate) bottom survey in dry dock shall in each case be reviewed by RHO. Such decision shall be made in accordance with 2.5.1.8.

2.5.4.3.5 If the shipowner has submitted a written statement that the ship is not expected to be operated in NAABSA regime, the intervals of bottom surveys as for group 1 ships or, if applicable, as for group 3 may be established for such ship with appropriate record to be made in the Classification Certificate and List of Survey's Status.

Reviewing this matter shall be within the competence of RHO.

In this case, compliance with the shipowner's statement concerning navigation conditions shall be checked by the RS surveyor during subsequent surveys by examining the ship log. The RS surveyor/RS Branch Office surveyor who becomes aware of revealed violations of the stated navigation conditions shall immediately inform RHO to review the matter relating to the ship's class status.

2.5.5 Group 3 ships. Survey schedule and procedures.

2.5.5.1 Berth-connected ships, floating facilities being operated in sheltered waters and non-self-propelled ships.

2.5.5.1.1 Provisions of 2.5.5.1.4 — 2.5.5.1.8 shall apply to non-self-propelled ships, steel and reinforced concrete berth-connected ships as well as to floating facilities (hereinafter referred to as "the ships") being operated in sheltered waters such as floating workshops, floating hotels, hostels etc., except for berth-connected ships retaining self-propelled ship distinguishing marks in the class notation (e.g. self-propelled ships used as floating oil/gas storage units), floating docks (refer to 2.5.5.5), berth-connected passenger ships and berth-connected nuclear floating facilities (refer to 2.5.5.4 and 2.5.5.6).

2.5.5.1.2 Provisions of 2.5.3 shall apply to berth-connected and non-self-propelled ships being operated in non-sheltered waters as well as to berth-connected ships retaining self-propelled ship distinguishing marks in the class notation (e.g. ships used as floating oil/gas storage units (FSO/FPSO)) regardless of area of operation.

2.5.5.1.3 The requirements of 2.5.5.4 and 2.5.5.6 shall apply to berth-connected passenger ships and berth-connected nuclear floating facilities, respectively.

2.5.5.1.4 Unless shorter periods are provided in as-built/operational documentation or by the shipyard, for ships specified in 2.5.5.1.1 the intervals between bottom surveys in dry dock shall be as stated below, taking into account the requirements of 2.5.5.1.7 and 2.5.5.1.8, if applicable:

first survey: 15 years after construction;

subsequent surveys: at intervals not exceeding 10 years.

During periodical surveys of the ship, its dry dock survey is not required, provided internal examination of the compartments and in-water survey using underwater television shows that there are no defects, damages and water ingress.

2.5.5.1.5 Bottom surveys shall be carried out in a dry dock and in conjunction with the special survey for renewal of the Classification Certificate appropriate for the ship's age.

At any other special surveys, the thorough examination of the whole ship's bottom from inside with the ship afloat may be carried out in lieu of bottom survey.

2.5.5.1.6 The bottom survey may be required before the intervals specified in 2.5.5.1.4 if the compliance of the ship's bottom condition with these Rules cannot be confirmed by the results of survey of the ship's bottom structures from inside at periodical survey or another in-water survey.

2.5.5.1.7 The performance, upon the shipowner's written request, of an in-water survey according to 2.5.8 in lieu of the bottom survey in dry dock shall be reviewed by the Register in each case and is within the competence of the RS Branch Office which will perform the relevant survey of the ship, or in case of the absence of the request for survey — RS Branch Office which is located in the area of permanent operation of the ship. Such decision shall be made in accordance with 2.5.1.8 provided that the compliance of the ship's bottom condition with these Rules may be confirmed by the results of thorough examination of the whole ship's bottom from inside.

2.5.5.1.8 Where the requirements of 2.5.5.1.7 apply, the next bottom survey in dry dock shall be carried out at the next prescribed special survey, but at intervals not exceeding 5 years.

The performance of in-water survey according to 2.5.8 in lieu of such bottom survey may be subsequently permitted provided the requirements of 2.5.5.1.7 and these requirements are met.

2.5.5.2 Ships designed for navigation in fresh waters only and/or in confined port waters only.

2.5.5.2.1 These provisions shall apply to ships engaged in coastal trade which are not classified as group 2 ships and are designed for navigation in fresh waters or confined port waters only.

Names and boundaries of specified fresh waters/confined port waters (as applicable) shall be recorded as restrictions on the area of navigation in the Classification Certificate and, as an additional information, in the classification section "Memoranda for Shipowners and Surveyors" of the List of Survey's Status.

These requirements shall not apply to ESP ships. The other requirements of this Chapter shall apply to ESP ships as the case may be.

2.5.5.2.2 Requirements of 2.5.4 shall apply to ships designed for navigation in fresh waters or confined port waters only classified as group 2 ships.

2.5.5.2.3 Requirements of 2.5.3 shall apply to ships specified in 2.5.5.2.1 with regard to 2.5.5.2.5 and 2.5.5.2.6, as applicable.

2.5.5.2.4 Notwithstanding the provisions of 2.5.5.2.3, upon the shipowner's written request, the bottom survey may be carried out as in-water survey according to 2.5.8 as alternative to bottom survey in dry dock by decision of the RS Branch Office which will perform the relevant survey of the ship, or in case of the absence of the request for survey — RS Branch Office which is located in the area of permanent operation of the ship. Such decision shall be made in accordance with the applicable provisions of 2.5.1.8.

2.5.5.2.5 Maximum interval between bottom surveys in dry dock for self-propelled ships shall comply with the following requirements:

ships of 10 years of age and less: shall not exceed the prescribed interval between surveys and/or maintenance of shafting or main AMSS to be carried out with the ship in dry dock only, or 10 years, whichever is earlier;

ships over 10 years of age: shall not exceed the prescribed interval between surveys and/or maintenance of shafting or main AMSS to be carried out with the ship in dry dock only, or 5 years, whichever is earlier.

2.5.5.2.6 The bottom survey may be required before the intervals specified in 2.5.5.2.5, if the compliance of the ship's bottom condition with these Rules cannot be confirmed by results of survey of the ship's bottom structures from inside at periodical survey or another in-water survey.

2.5.5.3 Floating facilities and offshore installations designed for long-term positioning on the seabed.

2.5.5.3.1 These requirements shall apply to underwater pontoons, particular MODU, FOP and other platforms, as well as FPU, which primarily designed for long-term positioning on the specially prepared seabed in accordance with the MODU/FOP Rules/Rules for the Classification, Construction and Equipment of Floating Offshore Oil-and-Gas Production Units (hereinafter referred to as the FPU Rules).

The ability of the floating facility and offshore installation to be operated when positioned on the seabed shall be confirmed by the Register based on appropriate as-built or operational documentation, shipyard conclusion with the relevant record made in the Classification Certificate in the class notation of the ship (e.g. descriptive notation **FOP gravity, pile** etc.) or in section "Other Characteristics" (e.g. the entry "Long-term positioning on the specially prepared seabed is provided by the design", etc.). When in accordance with the design documentation, the shipyard conclusion and upon agreement with RHO, dry docking is not provided for such items, the Register shall make an entry in section "Other Characteristics" of the Classification Certificate reading as follows: "Dry docking is not provided by the design". Similar entry shall be made in the List of Survey's Status.

2.5.5.3.2 The bottom survey of the accessible underwater part of floating facilities and offshore installations specified in 2.5.5.3.1 shall be carried out in accordance with 2.5.8 and in conjunction with each special survey of the floating facility and offshore installation for renewal of the Classification Certificate (class renewal survey).

The normally inaccessible underwater part of floating facility and offshore installation (bottom plating, bilge strake, etc.) shall be subject to in-water survey in accordance with 2.5.8 each time when the floating facility and offshore installation are removed from the seabed position.

2.5.5.3.3 The intervals between bottom surveys of floating facilities and offshore installations in dry dock shall be as follows:

first survey: 15 years after construction;

subsequent surveys: at intervals not exceeding 10 years.

Bottom survey of particular MODU, FOP, FPU which dry docking is not possible (that confirmed by the Register with the appropriate entry made in the Classification Certificate based on the provisions of 2.5.5.3.1) shall be subject to in-water survey in accordance with 2.5.8.

2.5.5.3.4 The in-water survey or bottom survey in dry dock may be required before the intervals specified in 2.5.5.3.2 and 2.5.5.3.3 if the compliance of the ship's bottom condition with these Rules cannot be confirmed by the results of periodical or another survey or the reduced interval is prescribed by the design or operational documentation or the shipyard conclusion.

2.5.5.4 Berth-connected passenger ships.

2.5.5.4.1 These provisions shall apply to pontoon/sea-going (ship-shaped) type berth-connected floating facilities designed for operation in sheltered waters in anchored/seabed position or moored at quay (improved shore) and intended for carriage of more than 12 passengers for accommodation and/or recreation purposes. Such ships include floating hotels, hostels, restaurants, museums, etc.

2.5.5.4.2 Unless shorter periods are provided in as-built/operational documentation or by the shipyard, the intervals between bottom surveys in dry dock for berth-connected passenger ships shall be as follows:

first survey: 10 years after construction;

subsequent surveys: at intervals not exceeding 5 years.

2.5.5.4.3 Bottom surveys shall be carried out in a dry dock and in conjunction with the special surveys (except for the first one) for renewal of the Classification Certificate (class renewal survey).

At first special survey of the ship of 5 years of age, the whole ship's bottom shall be thoroughly examined from inside.

2.5.5.4.4 The bottom survey may be required before the intervals specified in 2.5.5.4.2 if the compliance of the ship's bottom condition with these Rules cannot be confirmed by the results of periodical survey or another survey of the ship's bottom structures from inside.

2.5.5.5 Floating docks.

Unless shorter periods are provided in as-built/operational documentation or by the shipyard, for floating docks the intervals between bottom surveys in dry dock shall be as follows:

first survey — 15 years after construction;

subsequent surveys — at intervals not exceeding 5 years.

At periodical surveys of a floating dock its dry dock survey is not required, provided internal examination of the compartments shows that there are no defects, damages and water leakage, and in-water survey using underwater television proves that there are no defects or damages.

2.5.5.6 Berth-connected nuclear floating facilities.

2.5.5.6.1 Schedule and procedures for bottom survey of berth-connected nuclear floating facilities in each particular case shall be established according to the specification agreed with the Register based on results of reviewing the design concepts and calculations which justify the safe operation of underwater part. Such information shall be recorded in the List of Survey's Status.

2.5.5.7 Ships fitted for long-term operation without dry-docking.

2.5.5.7.1 These provisions shall apply to berth-connected ships with distinguishing mark **UWILD** or **UWILD-S** in the class notation.

2.5.5.7.2 Unless shorter periods are provided in as-built/operational documentation or by the shipyard, the intervals between bottom surveys shall be as follows:

first survey: 10 years after construction;

subsequent surveys: at intervals not exceeding 5 years.

2.5.5.7.3 Bottom survey of a ship less than 25 years of age shall be carried out from inside and as in-water survey according to 2.5.8, and for a ship of 25 years of age and over — in a dry dock and in conjunction with special surveys (except for the first one) for renewal of the Classification Certificate.

At first special survey of the ship of 5 years of age, the whole ship's bottom shall be thoroughly examined from inside.

2.5.5.7.4 The possibility of the in-water survey carried out after the ship reached 25 years of age as an alternative to a bottom survey in dry dock shall be considered by RHO upon receipt of the owner's written request and taking into account the available information on technical condition of the items of the ship's bottom.

2.5.5.7.5 The in-water survey or bottom survey in dry dock may be required before the intervals specified in 2.5.5.7.2 if the compliance of the ship's bottom condition with these Rules cannot be confirmed by the results of in-water survey using underwater television or another survey or the reduced interval is prescribed by the design or operational documentation or the shipyard conclusion.

2.5.6 Determination of bottom surveys intervals.

2.5.6.1 Intervals between subsequent bottom surveys after construction shall be determined starting from the date of build of the ship based on the schedule specified in 2.5.3 — 2.5.5.

2.5.6.2 Intervals between bottom surveys for the ship in service shall be assigned taking into account the requirements of 2.5.6.3 — 2.5.6.5, as stated below.

2.5.6.2.1 For bottom survey completed within 3 months before the actual date of special survey completion, the next period shall start from the actual date of special survey completion provided that within this 3-month period the ship did not leave the port/shipyard waters where its bottom survey was carried out.

2.5.6.2.2 For bottom survey completed more than 3 months before the actual date of the special survey completion, the next period shall start from the actual date of bottom survey completion.

2.5.6.2.3 Notwithstanding the provisions of 2.5.6.2.2, for bottom survey in dry dock completed more than 3 months before the actual date of the special survey completion, the next period may start from the actual date of the special survey completion provided the following conditions are met:

within the whole period from the date of bottom survey completion up to the actual date of special survey completion the ship didn't leave the port/shipyard waters where surveys were carried out; and

the results of in-water survey confirm that the ship's bottom condition did not worsened from the date of survey in dry dock.

2.5.6.2.4 For ESP ships more than 10 years of age, the assigned bottom survey period shall not exceed the upper limit of appropriate intermediate survey window.

2.5.6.2.5 For particular general cargo ships covered by Section 7, Part III "Additional Surveys of Ships Depending on their Purpose and Hull Material", and more than 15 years of age, the assigned bottom survey period shall not exceed the upper limit of appropriate intermediate survey window.

2.5.6.2.6 In all cases, unless otherwise provided in these Rules, the assigned bottom survey period shall not exceed the assigned special survey period.

2.5.6.3 Assigned bottom survey period for the following ships of group 1 may exceed the upper limit of assigned intermediate survey window because in such cases the bottom survey is not crried out in conjunction with the intermediate survey:

ships not covered by IACS UR Z7.1 — Z10s;

ships less than 10 years of age not covered by IACS UR Z10s (refer to 2.5.6.2.4);

ships less than 15 years of age covered by IACS UR Z7.1 (refer to 2.5.6.2.5).

In such cases, Classification Certificate is endorsed (confirmed) based on results of completed intermediate survey carried out in full scope prescribed by these Rules with no regard whether the ship's bottom was surveyed or not.

2.5.6.4 For ships of group 1 and group 3, the next bottom survey period shall be stated in the List of Survey's Status (and in other reports, if necessary) as a final date assigned, as the case may be.

2.5.6.5 For ships of group 2, the next bottom survey period shall be stated in the List of Survey's Status (and in other reports, if necessary) assigned as the time window of the next annual, intermediate or special survey, within which the ship's bottom shall be surveyed[1]:

for subsequent annual and intermediate surveys the window relevant to ±3 months period from the anniversary date of the Classification Certificate is assigned;

for subsequent special survey the window relevant to –3/ +0 months period from the anniversary date of the Classification Certificate is assigned.

2.5.7 Scope of bottom survey in dry dock.

2.5.7.1 General provisions.

Where survey of the outside of the ship's bottom and related items is carried out in dry dock, the ship shall be placed on keel blocks and/or cages of sufficient height in accordance with the scheme. The scheme for placing the ship on keel blocks/cages for the ship of 15 years of age and over shall differ from the scheme for the previous bottom survey in dry dock unless the ship was repositioned on keel blocks/cages during the previous survey.

Scaffolds, staging or other necessary arrangements shall be provided to ensure access and proper survey of structural hull members (for example, shell plating of bottom and sides, stem and sternframe, etc.), external parts of steering gear, enclosures of sea chests and ice boxes, side and bottom valves, external parts of shafting, propeller, etc.

Biofouling shall be removed from the ship's bottom to make possible corrosion traces, deformations, cracks, damages and other defects visible for inspection (examination). The structural sections to be replaced as decided by the shipowner may be cleaned only as to allow for identification of boundaries of sections subject to replacement.

To coordinate works performed during survey in dry dock, the meeting on bottom survey planning shall be held with participation of shipowner, RS surveyor and other interested parties (for example, representative of the firm engaged in thickness measurements). The meeting shall be held prior to commencement of bottom survey in accordance with 2.5.9.

Technical condition of the ship's bottom related items shall be assessed in accordance with Section 5, Part I "General Provisions".

2.5.7.2 Hull.

The side and bottom shell plating shall be examined for excessive corrosion or deterioration due to chafing or contact with the ground and for any other defects of hull shapes (for example, buckling, waviness etc).

Stems, bar keel, bilge keels and other similar structures, propeller shaft brackets, beams and floors of hopper dredgers and hopper barges, sea chests and ice boxes as well as all welds shall be examined.

Special attention shall be given to connections between the bilge keels and other similar structures with shell plating.

For ships of ice classes **Arc4 — Arc9** (including **Л1/L1**, **УЛ/UL** and **УЛА/ULA**), **Icebreaker6 — Icebreaker9** (including **ЛЛ4/LL4**, **ЛЛ3/LL3**, **ЛЛ2/LL2** and **ЛЛ1/LL1**) special attention shall be also given to connection of ice horn (to protect the rudder blade when in reverse) with the sternframe.

In the suspected areas revealed during examination, the residual thickness measurements shall be carried out as required by the RS surveyor.

If thickness measurements of the ship's bottom and related items are required during the ship survey under which the survey dry dock is carried out, such measurements shall be

[1] It should be noted, that the Passenger Ship Safety Certificate issued in accordance with SOLAS 74/78, and the Certificate Dynamically Supported Craft Construction and Equipment issued in accordance with the Code of Safety for Dynamically Supported Craft, shall be renewed annually. At that, if one of these certificates is available on board the next bottom survey window as –3/+0 months from anniversary date of the Load Line Certificate (refer also to Footnote 1 to 2.5.4.1.1) shall be assigned.

performed to the maximum extent possible (upon agreement with the RS surveyor) with the ship in dry dock.

All revealed defects with parameters beyond the permissible limits shall be eliminated.

All revealed defects with parameters within the permissible limits which were not required to be eliminated shall be recorded into checklist/survey reports in accordance with 2.5.10.3.

For the ships of 20 years of age and over, the areas of shell plating which were on keel blocks/cages during the previous survey in dry dock shall be subject to thorough examination and overall flaw detection. These areas shall be identified with the use of dry dock scheme for the previous survey to be kept in the ship file (refer to 2.5.7.1 and 2.5.10.1).

2.5.7.3 Sea inlets, bottom and side valves.

The areas of contact of ship pipelines to shell platings, bottom and side valves, sea chest pipelines, sea chest filters, valve fastening and fastening of their branches, if any, to hull, sea chests and ice boxes shall be examined.

In the suspected areas of pipelines and branches revealed during examination, the residual thickness measurements shall be carried out as required by the RS surveyor.

If thickness measurements of pipelines and branches are required during the ship survey under which the survey in dry dock is carried out, such measurements shall be performed to the maximum extent possible (upon agreement with the RS surveyor) with the ship in dry dock.

The valves and fittings shall be submitted in the disassembled condition and subject to tightness test after assembly during surveys to be carried out as part of the special survey. During other surveys their opening and testing may be omitted unless deemed necessary by the RS surveyor.

Prior to launching the ship, the check if fasteners of sea chest gratings are properly locked shall be carried out.

2.5.7.4 Rudder and steering gear.

Visible parts of rudder and steering gear including rudder blade, nozzles (including fixed nozzles), rudder pintles and gudgeons, rudder shaft, fasteners securing rudder blade/steering nozzles to rudder shaft as well as hull members relating to rudder and steering gear shall be examined.

If deemed necessary by the RS surveyor, the rudder/steering nozzle may be lifted or the inspection plates removed for examination of pintles.

The clearances in the rudder bearings and pintles and/or steering nozzle as well as clearance for dropping of rudder blade and/or steering nozzle shall be measured and recorded. Clearances shall be measured in the presence of the RS surveyor.

Welds in areas where fixed nozzles and rudder tubes fastened to hull shall be subjected to thorough examination.

The RS surveyor may require the rudder and steering gear to be disassembled for thorough examination if clearances in rudder bearings and/or pintles and/or steering nozzle are beyond the permissible limits or in other justified cases.

If the rudder and steering gear is not designed for measuring clearances in rudder shaft bearings and/or pintles and/or steering nozzle, the rudder and steering gear shall be subject to survey in disassembled condition at each bottom survey in dry dock being carried out in conjunction with the special survey.

In case of oil lubrication system, the RS surveyor shall decide whether the rudder and steering gear shall be disassembled.

Where applicable, rudder blade and/or nozzle shall be subject to tightness test (for example, hollow) as deemed necessary by the RS surveyor.

In case the fasteners between flanged connections of rudder blade and/or nozzle and rudder shaft are disassembled, measurements and close-up survey of fit bolts shall be carried out. This shall include flaw detection of fit bolts by non-destructive testing approved

by RS, if it was required upon measurements and close-up survey. If any defects are found, the fit bolts shall be replaced by the new ones. In this regard, the documents shall be submitted confirming compliance of material of the new fit bolts with that in the as-built documentation.

Prior to launching the ship, the check if fasteners of flanged connection between rudder blade and/or nozzle and rudder shaft are properly locked and if inspection plates are fitted at their standard places and properly secured, if applicable, shall be carried out. Prior to launching the ship, the rudder and steering gear shall be checked for complete, free and smooth putting of rudder blade and/or steering nozzle hard- over to hard-over.

2.5.7.5 Shafting and propellers.

2.5.7.5.1 The scope of shafting and propeller surveys is specified in 2.11.

2.5.7.5.2 If no shafting and propellers survey according to any method specified in 2.11 is required or scheduled during the bottom survey, the applicable provisions of 2.11.9 shall be met, as well as the following shall be carried out:

.1 visible parts of the propeller shaft, propeller and stern bushes shall be examined by the RS surveyor. Propeller blades shall be thoroughly examined to check for possible cracks and defects by non-destructive tests as deemed necessary by the RS surveyor;

.2 where possible, clearances in sterntube bearings shall be measured with oil seal reliability checked, if any. Clearances shall be measured in the presence of the RS surveyor;

.3 for oil lubricated shafting, shaft dropping shall be measured in the presence of the RS surveyor, as far as applicable and practicable;

.4 for controllable pitch propellers, the RS surveyor shall confirm that fasteners condition and tightness of propeller boss and blade sealings comply with these Rules. Dismantling may be omitted unless deemed necessary by the RS surveyor;

.5 prior to launching the ship, the RS surveyor shall verify that fasteners which secure removable blades with boss, propeller with shaft are properly locked as well as that casing of propeller shaft and propeller fairing are fitted into their standard places and properly secured, if applicable.

2.5.7.6 AMSS shall be surveyed in accordance with 2.11.8.

2.5.7.7 Navigational equipment.

For ships of ice classes **Arc4 — Arc9** (including **Л1/L1**, **УЛ/UL** and **УЛА/ULA**), **Icebreaker6 — Icebreaker9** (including **ЛЛ4/LL4**, **ЛЛ3/LL3**, **ЛЛ2/LL2** and **ЛЛ1/LL1**) and ships of polar classes **PC1 — PC7**, the visible parts of primary log transducers as well as their anti-icing protection means shall be checked for visible damages.

For ships of ice classes **Arc4 — Arc9** (including **Л1/L1**, **УЛ/UL** and **УЛА/ULA**), **Icebreaker6 — Icebreaker9** (including **ЛЛ4/LL4**, **ЛЛ3/LL3**, **ЛЛ2/LL2** and **ЛЛ1/LL1**) and ships of polar classes **PC1 — PC7**, the surface of echosounder vibrators as well as their anti-icing protection means shall be checked for visible damages. Prior to launching the ship, the check if there is no paint coating on the radiation surface of the echosounder vibrator shall be carried out.

2.5.7.8 For assignment/retainment of distinguishing mark **IWS** in the class notation, the ship compliance with the requirements of Section 12, Part XVII "Distinguishing Marks and Descriptive Notations in the Class Notation Specifying Structural and Operational Particulars of Ships" of the Rules for the Classification and Construction of Sea-Going Ships shall be verified at bottom survey.

2.5.7.9 Priorto launching, the availability and marking (painting) of load lines and draught scales shall be verified.

2.5.8 In-water survey.

2.5.8.1 The in-water survey shall provide the information on the ship's bottom condition normally obtained from the survey in dry dock.

In respect of measurements of rudder bearing clearances as well as stern bush clearances, the possibility of such measurements[1] shall be determined based on a review and check of the operating history, review of the previous measurements, on board testing and oil sample reports. The proposals on the appropriate measures relating to the above measurements shall be included into the work programme of survey (refer to 9.1.10, Part II "Carrying Out Classification Surveys of Ships" of the Guidelines) and submitted to the Register for review prior to survey commencement. The proposals on the appropriate measures may be agreed upon by the Register provided they are sufficient to ensure compliance with the applicable requirements of the Register and/or flag MA (where applicable).

2.5.8.2 The in-water survey shall be carried out with the ship in sheltered water and preferably with weal tidal streams and currents. The in-water visibility and the cleanliness of the hull below waterline shall be clear enough to permit a meaningful examination which allows the RS surveyor and a firm carrying out an in-water survey to determine condition of the shell plating, appendages and welds. Methods of orientation of the divers and/or remotely operated vehicle (ROV, if applicable) on the plating during survey, which shall make use where necessary of permanent markings on the shell plating at selected points shall be agreed with the Register.

Further information on the in-water survey procedure is given in Section 9 of Part II "Carrying Out Classification Surveys of Ships" of the Guidelines and in Annex 1 thereto.

The distinguishing mark **IWS** is assigned to a ship when the ship is prepared for in-water survey.

2.5.8.3 The equipment, procedure for observing and reporting the survey shall be discussed with the parties involved prior to the in-water survey, and suitable time shall be allowed to permit the firm carrying out an in-water survey to test all equipment beforehand.

2.5.8.4 The in-water survey shall be carried out by the RS surveyor, involving the firm carrying out the in-water survey and recognized by RS in accordance with Section 9 of Part I "General Regulations for Technical Supervision" of RTSCS, taking into account the provisions of Section 7 of Part I "General Provisions" of these Rules.

2.5.8.5 The surveyor shall be satisfied with the method and pictorial representation. Where a diver is involved in the survey, a good two-way communication between the RS surveyor and the diver shall be provided. When the survey is carried out with the use of ROV, the information on the survey shall be provided by a ROV operator with the use of relevant technical facilities.

2.5.8.6 If the in-water survey reveals damage or deterioration that requires early attention, the RS surveyor may require that the ship be drydocked in order that a detailed survey can be undertaken and the necessary repairs carried out.

2.5.8.7 The firm carrying out the in-water survey shall submit the report on in-water survey to the RS surveyor and, ifnecessary, video recordings. The report on in-water survey shall be submitted to be kept in the ship file.

2.5.9 Planning of bottom survey in dry dock (refer to IMO circular MSC.1/Circ.1223).

2.5.9.1 The shipowner, the RS surveyor and other interested parties (e.g. a representative of the firm engaged in thickness measurements) shall cooperate and hold a meeting prior to the commencement of bottom survey to ensure efficient and safe conduct of the survey in dry dock in compliance with these Rules.

---

[1] For ships covered by the provisions of the Survey Guidelines under the Harmonized System of Survey and Certification (HSSC) (IMO resolution A.1140(31)), it should be considered that during survey of the outside of the ships' bottom of cargo ships the provisions of Section 3 of Annex 1 to IMO resolution A.1140(31) shall be complied with, in particular, noting the clearances measured in the rudder bearings; noting the clearances measured in the stern bushes, as far as practicable. During survey of the outside of the ship's bottom of passenger ships the provisions of 5.10.3 of IMO resolution A.1140(31) shall be met, according to which rudder bearing clearances need not be taken at such surveys with the ship afloat (in-water survey).

2.5.9.2 A survey planning meeting shall be held in advance to co-ordinate the work to be carried out during the survey and shall include, as a minimum, a review of the following information:

survey status and basic ship information;

survey report files of the outside of the ship's bottom;

details of any requirements or known damages (due to grounding, cargo operations, etc.) that affect or may affect the survey in dry dock;

details of known structural damages of the ship;

reports on known structural repairs carried out during previous surveys in dry dock; and

details of any additional items to be surveyed, scopes of thickness measurements and known works on maintenance of RS class to be carried out during survey in dry dock.

2.5.9.3 Details of the meeting held shall be recorded in the RS reporting documents (the Minutes of Meeting on Planning and Arrangement of Ship's Survey (form 6.6.2) are recommended to be used).

2.5.10 Drawing up the bottom survey results.

2.5.10.1 The bottom survey results shall be recorded in the Survey checklist (form 6.1.01), or in justified cases, in the Reports as per forms 6.3.10/K, 6.3.17, 6.4.6 or 6.3.10.

For ships of 15 years of age and over, when the ship was not repositioned on keel blocks/cages while being in dry dock, the scheme for placing the ship on keel blocks/cages (refer to 2.5.7.1) shall be forwarded to the ship file to be used for subsequent bottom surveys in dry dock.

2.5.10.2 If the bottom survey, in compliance with the requirements of this Chapter, is extended or in-water survey is carried out in lieu of bottom survey in dry dock or other decisions are taken relating to bottom survey, the reference to such decision shall be made in the report documents specified in 2.5.10.1 as well as in the classification section "Memoranda for Shipowners and Surveyors" of the List of Survey's Status.

2.5.10.3 All revealed defects with parameters within the permissible limits which were not required to be eliminated shall be recorded in the checklist/survey reports.

Instead of being described in the checklists and reports, the defects may be indicated in diagrams and hull expansions with appropriate reference being made in the appropriate checklists and survey reports. In this case, all applicable diagrams and expansions shall be attached to survey reports/records and kept in the ship file.

Additionally, similar to checklists and reports, such defects shall be specified in the classification section "Memoranda for Shipowners and Surveyors" of the List of Survey's Status in order to be considered by the RS surveyors during subsequent surveys to access the possible propagation of these defects.

2.5.10.4 The confirmation on the bottom survey performance shall be specified in the List of Survey's Status, and an entry on the assigned date of the next bottom survey shall be made therein[1].

2.5.10.5 For assignment/retainment of distinguishing mark **IWS** in the class notation, the ship compliance with the requirements of Section 12, Part XVII "Distinguishing Marks and Descriptive Notations in the Class Notation Specifying Structural and Operational Particulars of Ships" of the Rules for the Classification and Construction of Sea-Going Ships shall be verified at bottom survey.

---

[1] Consideration shall be given to ships having Cargo Ship Safety Construction Certificate or Cargo Ship Safety Certificate issued in accordance with the provisions of SOLAS 74/78, the confirmation on bottom survey performance shall be specified in this certificate.

2.5.11 Extension of bottom survey in dry dock (IACS Recommendation No. 133).

2.5.11.1 Upon the shipowner's written request and as decided by RHO, some ships of age less than 10 years may be subject to pilot scheme of extended interval between surveys in dry dock (extended drydocking (EDD) scheme) up to 7,5 years.

2.5.11.2 Conditions of ships acceptance into a pilot scheme and procedure for its application are specified in Annex 51 to the Guidelines.

2.6 CONTINUOUS SURVEY SYSTEM

2.6.1 At the shipowner's request the Register establishes the Continuous Survey System of the Ships (CSS): hull, arrangements, machinery, electrical equipment, refrigerating plant.

2.6.2 CSS does not apply to the hull of ships, which are covered by the requirements of Sections 2 — 7 of Part III "Additional Surveys of Ships Depending on their Purpose and Hull Material".

2.6.3 Continuous survey consists of the distribution of survey scope corresponding to the scope of special survey for class renewal between separate surveys, and the whole cycle of survey shall be conducted within the period, for which the class is assigned or renewed.

2.6.4 Application of CSS to the ship (hull, arrangements, machinery, electric equipment and refrigerating plant) is certified by an appropriate entry in the Classification Certificate. The list of items of technical supervision within CSS, brief description of survey and planned submission dates shall be recorded by the RS surveyor in the appropriate section of the List of Survey's Status which may be printed out and forwarded to the ship upon the shipowner's request.

2.6.5 Surveys, which are permitted to be carried out by the ship's chief engineer, are credited after the confirming survey performed by the RS surveyor.

If during survey of an item, the surveyor finds out wear, damages or failures affecting safe operation of the item or has any doubt in good working order of the item, he/she may require repeated or additional survey, as well elimination of the revealed defect immediately or at a stated time.

2.6.6 The requirements for performance of surveys in due dates shall apply to CSS in full:

for annual surveys, in accordance with the requirements of 2.2.1;

for special surveys, in accordance with the requirements of 2.4.1.

Items of technical supervision subject to continuous survey, which dates are due oroverdue by the time of annual survey, shall be surveyed during this annual survey. Otherwise, the Classification Certificate shall not be endorsed, and the ship's class shall be suspended, in case the items of technical supervision within CSS were not surveyed at the specified due date, or survey of these items was extended.

2.6.7 For implementation and application of CSS, the Instructions for Continuous Survey of Ships (refer to Annex 2 to the Guidelines) shall apply.

2.6.8 Application of CSS of the hull.

At the shipowner's discretion, the ships' hulls may be submitted for special survey, except for oil tankers, combination carriers, bulk carriers, chemical tankers and ships specified in Section 7 of Part III "Additional Surveys of Ships Depending on their Purpose and Hull Material", which is conducted in compliance with CSS. In this case:

.1 complete survey of the hull to meet the requirements of the hull special survey, may be carried out on the CSS basis, when, at the shipowner's request it has been agreed by the Register. CSS does not exempt from the necessity to submit the ship for other specified periodical surveys;

.2 when such system is adopted, all the requirements of the particular hull special survey shall be completed at the end of the five-year class period;

.3 during each cycle of continuous survey, all items of technical supervision shall be surveyed (and tested, where required) in regular rotation, as far as practicable, with uniform annual share within the five-year class period;

.4 shipowner is entitled to fix the sequence, in which the individual items of the hull are intended to be surveyed. However, the sequence in each survey cycle shall be linked

with that of the previous one in such a way that the interval between consecutive surveys of each item shall not exceed five years.

Dry dock survey may be carried out at any time within the five-year class period, provided that the requirements of 2.5 are complied with.

For ships more than 10 years of age, the ballast tanks shall be internally examined twice in each five-year class period, i.e. once within the scope of intermediate survey and once within the scope of the continuous system for the hull special survey;

.5 the surveyor may extend the scope of survey at his discretion, ifthe survey carried out revealed any defects;

.6 the agreement for surveys to be carried out on the CSS basis may be withdrawn at discretion of the Register.

2.7 PLANNED MAINTENANCE SCHEME FOR MACHINERY

2.7.1 General.

2.7.1.1 Application.

2.7.1.1.1 These requirements apply to an approved Planned Maintenance Scheme for Machinery (PMS) as an alternative to CSS.

2.7.1.1.2 Surveys under PMS shall be carried out on the basis of intervals between the maintenance operations (overhauls) recommended by the manufacturer, documented operator's experience and a condition monitoring system, where fitted.

2.7.1.1.3 This Scheme is limited to components and systems covered by CSS.

2.7.1.1.4 Any items not covered by PMS shall be surveyed and checked in compliance with the requirements of these Rules.

2.7.1.1.5 For ships where PMS is applied, the Letter of Authorization of the Chief Engineer to Perform Surveys of Items within CSS is not required to carry on board (refer to Annex 2 to the Guidelines).".

2.7.1.2 Maintenance intervals.

2.7.1.2.1 The intervals for PMS shall not exceed those specified for CSS.

2.7.1.3 Onboard responsibility.

2.7.1.3.1 The chief engineer shall be the responsible person on board in charge of PMS.

2.7.1.3.2 Documentation on maintenance operations (overhauls) of items covered by PMS shall be reported and signed by the chief engineer and submitted to the Register.

2.7.1.3.3 Access to computerized systems for updating of the maintenance documentation and maintenance programme shall only be permitted by the chief engineer or other authorized person.

2.7.2 Procedures and conditions for approval of PMS.

2.7.2.1 System requirements.

2.7.2.1.1 PMS shall be programmed and maintained by a computerized system. However, this may not be applied to the current already approved schemes.

2.7.2.1.2 PMS shall be approved in accordance with a procedure established by the Register.

2.7.2.1.3 Computerized systems shall include back-up disks/tapes, CDs, which shall be updated at regular intervals.

2.7.2.1.4 Computerized systems shall be approved by the Register.

2.7.2.2 Documentation and information.

2.7.2.2.1 The following documentation shall be submitted for PMS review and approval:

.1 organization chart identifying areas of responsibility;
.2 documentation filling procedures (instructions);
.3 listing of equipment to be considered by the Register in PMS;
.4 machinery identification procedure;
.5 preventive maintenance sheets for each machine to be considered;
.6 listing and schedule of preventive maintenance procedures.

2.7.2.2.2 In addition to the above documentation, the following information shall be available on board:

.1 all documentes listed in 2.7.2.2.1 and updated with the current date;
.2 maintenance instructions (manufacturer's and shipyard's);
.3 reference documentation (trend investigation procedures, etc.);
.4 records of the maintenance including repairs and renewals carried out.

2.7.2.3 Conditions for application of PMS.

2.7.2.3.1 For PMS implementation on board, an initial survey shall be carried out in accordance with 2.7.3.1. Upon satisfactory completion of the survey, the distinguishing mark **PMS** shall be added to the character of classification (refer to 2.2.30, Part I "Classification" of the Rules for the Classification and Construction of Sea-Going Ships).

2.7.2.3.2 The annual report, covering the years' service and including the information as required under 2.7.2.2.1.3 and 2.7.2.2.1.5 as well as the information on changes to other paras in 2.7.2.2.1, shal lbe reviewed by the RS surveyor during the ship survey.

2.7.2.3.3 For PMS retainment, an annual audit (annual survey) shall be carried out in accordance with 2.7.3.2. Upon satisfactory completion of the audit (survey), the distinguishing mark **PMS** shall be retained in the class notation.

2.7.2.3.4 The survey arrangement for machinery under PMS can be cancelled by the Register, if:

.1 PMS is not being satisfactorily carried out;

.2 either from the maintenance records or the general condition of machinery the deficiencies are revealed; or

.3 when the agreed intervals between the machinery repairs (overhauls) are not exceeded.

2.7.2.3.5 The case of sale or change of operator of the ship shall cause the PMS approval to be reconsidered by the Register.

2.7.2.3.6 The shipowner may, at any time, cancel the survey arrangement for machinery under PMS by informing the Register in writing. For this case the items, which have been inspected under PMS since the last annual survey can be credited for class periodical surveys at the discretion of the RS surveyor.

2.7.2.3.7 When PMS is not operated, the distinguishing mark **PMS** shall be deleted from the class notation.

2.7.3 Survey under PMS.

2.7.3.1 Initial survey for PMS implementation (implementation survey).

2.7.3.1.1 The PMS implementation survey shall be carried out by the RS surveyor within one year from the date of approval of the PMS.

2.7.3.1.2 During the PMS implementation survey the following documentation shall be available on board:

.1 all documents listed in 2.7.2.2.1 corrected as of the current date (when required);

.2 maintenance instructions (manufacturer's and shipyard's);

.3 condition monitoring data including all data since last opening of the machine and the original baseline data;

.4 reference documentation (trend investigation procedures, etc.);

.5 records of maintenance including repairs and renewals carried out.

2.7.3.1.3 During the implementation survey the following shall be verified by the RS surveyor to ensure:

.1 PMS is implemented according to the approved documentation and is adapted to the type and complexity of the components/system on board;

.2 PMS is producing the documentation required for the annual audit (annual survey) and the requirements of surveys and testing for retainment of class are complied with;

.3 the onboard personnel is familiar with PMS.

2.7.3.1.4 When the PMS implementation survey is carried out and the PMS implementation is found in order, a report describing the PMS shall be submitted to the Register and the approved PMS may replace the CSS.

2.7.3.1.5 Upon satisfactory completion of PMS implementation survey the distinguishing mark **PMS** shall be added to the character of classification. The survey results shall be recorded by the RS surveyor in the Report as per form 6.3.10.

2.7.3.2 Survey for retainment of PMS.

2.7.3.2.1 Annual audit[1] (Annual survey).

2.7.3.2.1.1 An annual audit (annual survey) of PMS shall be carried out by the RS surveyor and preferably concurrently with the annual survey of machinery.

---

[1] The term audit, in this context, is not related to ISM audit.

2.7.3.2.1.2 The RS surveyor shall verify:

.1 items of technical supervision under PMS;

.2 performance and maintenance records to confirm that the machinery has functioned satisfactorily since the previous survey or action has been taken in response to machinery operating parameters exceeding acceptable tolerances and the prescribed intervals between the maintenance operations (overhaul intervals) have been maintained;

.3 availability of written details of break-down or malfunction, if any;

.4 description of the repairs carried out. Any machinery part, being which has been replaced by a spare one, due to damage, shall be retained on board — where possible — until examined by the RS surveyor;

.5 annual report made in accordance with 2.7.2.3.2.

2.7.3.2.1.3 Upon satisfactory completion of the annual audit (annual survey) and confirmation of compliance with the above requirements, the Register shall retain **PMS**. The distinguishing mark PMS may be retained in the class notation. The survey results shall be recorded in the Report drawn up per form 6.3.10.

2.7.4 Damage and repairs.

2.7.4.1 The damage of essential components/machinery shall be reported to the Register. The repairs of such damaged components/machinery shall be carried out under the Register technical supervision.

2.7.4.2 Any repair or corrective action regarding the machinery under PMS shall be recorded in the PMS logbook and repair shall be verified by the surveyor to the Register at the annual audits.

2.7.4.3 In the case of overdue outstanding conditions of class (classification requirements) or a record of unrepaired damage, which would affect PMS, the relevant items shall be kept out of PMS until the condition of class is fulfilled or the repair is carried out.

2.8 CONDITION MONITORING SYSTEMS AND CONDITION BASED MAINTENANCE

2.8.1 General.

2.8.1.1 Application.

2.8.1.1.1 These requirements apply to the approved condition monitoring (CM) and condition based maintenance (CBM) schemes where the condition monitoring results are used to influence the scope and/or frequency of surveys.

2.8.1.1.2 These schemes may be applied to components and systems covered by CSS of machinery, and otheritem of technical supervision as requested by the shipowner taking into account the requirements of Section 10 of Part VII "Machinery Installations" of the Rules for the Classification and Construction of Sea-Going Ships. The extent of CBM and associated monitoring equipment to be included in the maintenance scheme is decided by the shipowner.

2.8.1.1.3 These requirements can be applied only to ships operating on approved PMS (refer to 2.7).

2.8.1.1.4 The schemes may be applied to any individual items and systems. Any items not covered by the schemes shall be surveyed and credited in accordance with the basic requirements of these Rules for the survey of items of the RS technical supervision and/or 2.6 (CSS), and/or 2.7 (PMS).

2.8.1.2 Condition Monitoring system (CM system).

2.8.1.2.1 The CM system is fitted on board the ship at the shipowner's discretion and shall be approved and subject to the relevant surveys performed by the Register upon the shipowner's written request in accordance with the requirements of this Chapter. The Register approval is also required where the shipowner wishes to change the survey cycle based on CM/CBM.

2.8.1.2.2 The CM system shall provide an equivalent or greater degree of confidence in the condition of the machinery as compared to traditional survey techniques.

2.8.1.2.3 Limiting parameters of diagnostics shall be based on the original equipment manufacturers (OEM) requirements/guidelines, or a recognised national or international standard.

2.8.1.2.4 Software products approved by the Register may be used for CM systems. Software systems for CM systems can use complex algorithms, machine learning and knowledge of global equipment populations/defect data in order to identify acceptability for continued service or the requirement for maintenance. These systems may be independent of the OEM recommended maintenance and condition monitoring suggested limits. Approval of this type of software by the Register shall be based on OEM recommendations, industry standards and RS experience.

2.8.1.2.5 The CM results shall be reviewed by the RS surveyor during the annual audit (annual survey). Where the RS-approved CM system is fitted on board, the results of condition monitoring of the item of the RS technical supervision may be credited by the RS surveyor during survey of the item based on acceptable condition monitoring results and the item general condition.

2.8.1.2.6 The RS surveyor retains the right to test or open-up the machinery, irrespective of the CM results, if deemed necessary.

2.8.1.3 Condition based maintenance system (CBM system).

2.8.1.3.1 The CBM system is used on board to obtain machinery/equipment maintenance efficiency. Where a shipowner wishes to base their equipment maintenance on a CBM approach, this shall meet the requirements of the ISM Code. The CBM system is fitted on board the ship at the shipowner's discretion and shall be approved and subject to the relevant surveys performed by the Register upon the shipowner's written request in accordance with the requirements of this Chapter The Register approval is also required where the shipowner wishes to change the survey cycle based on CM/CBM.

2.8.1.3.2 Where an agreed planned maintenance and CBM scheme is in operation, the CSS and other survey intervals may be extended based on OEM maintenance recommendations and acceptable CM results.

2.8.1.3.3 Limiting parameters (alarms and warnings) shall be based on the OEM guidelines, or a recognised international standard.

2.8.1.3.4 The CBM scheme shall provide an equivalent orgreater degree of confidence in the condition of the machinery to traditional maintenance techniques.

2.8.1.3.5 Software products approved by the Register may be used for CBM systems. Software systems for CBM systems can use complex algorithms, machine learning and knowledge of global equipment populations/defect data in order to identify acceptability for continued service or the requirement for maintenance. These systems may be independent of the OEM recommended maintenance and condition monitoring suggested limits. Approval of this type of software by the Register shall be based on OEM recommendations, industry standards and RS experience.

2.8.2 Procedures and conditions for approval of CM and CBM systems.

2.8.2.1 Onboard responsibility.

2.8.2.1.1 The shipowner shall assign a responsible person on board in charge of the CM and CBM. As a rule, the chief engineer shall the responsible person. The equipment monitoring shall be carried out by the qualified personnel. When assigning the responsible personnel, the requirements of national and international standards for qualification and assessment of personnel involved in the equipment monitoring (for the ships flying the RF flag: GOST R 18436 series) shall be taken into account.

2.8.2.1.2 Documentation on the overhaul of items covered by CM and CBM schemes shall be developed in accordance with 2.8.2.3 and signed by the responsible person assigned in accordance with 2.8.2.1.1, and submitted by the shipowner to the Register together with the appropriate request for the documentation review and approval.

2.8.2.1.3 Access to computerized systems for updating of the maintenance documentation and maintenance program shall only be permitted by the chief engineer or other person authorized by the shipowner.

2.8.2.1.4 All personnel involved in CM and CBM shall be appropriately qualified.

2.8.2.1.5 CM does not replace routine surveillance or the chief engineer's responsibility for taking decisions in accordance with his judgement.

2.8.2.2 Equipment and CM/CBM system requirements.

2.8.2.2.1 CM equipment and systems shall be approved in accordance with a procedure established by the Register.

2.8.2.2.2 The CM/CBM schemes and their extent shall be approved by the Register.

2.8.2.2.3 The CBM scheme shall be capable of producing a condition report, and maintenance recommendations.

2.8.2.2.4 The CM/CBM systems shall be provided to identify where limiting parameters (alarms and warnings) are modified during the operation of the scheme.

2.8.2.2.5 Where CM and CBM schemes use remote monitoring and diagnosis (i.e. data is transferred from the ship and analysed remotely), the system CM/CBM shall meet the applicable standards for cyber safety and security. The system CM/CBM shall be capable of continued onboard operation in the event of loss of the communication function.

2.8.2.2.6 CBM schemes shall identify defects and unexpected failures that were not prevented by the CM system.

2.8.2.2.7 CM/CBM systems shall include a method of backing up data at regular intervals.

2.8.2.3 Documentation and Information.

2.8.2.3.1 The following documentation shall be made available to the Register for review and approval of the scheme:

.1 procedure for changes to system software and CM parameters;

.2 listing of equipment to be included in the scheme CM/CBM;
.3 listing of acceptable CM parameters;
.4 description of CBM scheme;
.5 listing, specifications and maintenance procedures for CM equipment;
.6 baseline (initial) data for equipment with CM;
.7 qualification of personnel and organization responsible for analysing CM results.

2.8.2.3.2 In addition to the above documentation the following information shall be available on board:

.1 all descriptions/listings, etc. in 2.8.2.3.1 in an up-to-date fashion;
.2 maintenance instructions (manufacturer's and shipyard's);
.3 CM data including all data since last opening of the machinery and the original baseline data;
.4 reference documentation (trend investigation procedures, technologies, etc.);
.5 records of maintenance including repairs and renewals carried out;
.6 records of changes to system software and parameters;
.7 sensors calibration records/certification/status.

2.8.2.3.3 When developing the software documentation, the applicable provisions of the national and international standards shall be met. A generic procedure for implementing a condition monitoring programme is shown in diagrammatic form in GOST R ISO 17359-2009 and identical international standard ISO 17359:2003. The main terms and definitions relating to condition monitoring and diagnostics of machinery are given in GOST R ISO 13372-2013 (ISO 13372:2012). With regard to data interpretation and diagnostics techniques, the requirements of GOST R ISO 13379-2009 (for ships flying the RF flag) or identical international standard ISO 13379:2003 shall be met.

2.8.2.4 CM/CBM system approval validity.

2.8.2.4.1 An annual audit shall be carried out to maintain the validity of the CM/CBM scheme (annual survey) by the Register.

2.8.2.4.2 The survey of machinery according CM/CBM can be cancelled by the Register if the CM/CBM system is not being satisfactorily carried out either from the maintenance records or the general condition of the machinery.

2.8.2.4.3 The case of change of the shipowner shall cause the RS previous approval to be invalid and the scheme approval to be reconsidered upon written request of the new shipowner. In case of suspension/withdrawal of RS class as well as transfer of the ship from RS class, the RS approval of the CM/CBM scheme becomes invalid.

2.8.2.4.4 The shipowner may, at any time, cancel the application of CM/CBM scheme, by informing the RS Branch Office for in-service supervision in advance (not later than 1 month prior to cancellation) in writing. For this case, the items under CM/CBM scheme, inspected by the Register during the last annual audit (annual survey), may be credited during survey of these items by decision of the RS Branch Office for in-service supervision or the RS Branch Office which is located in the area of permanent operation of the ship.

2.8.3 Surveys of CM/CBM systems.

2.8.3.1 Installation survey.

2.8.3.1.1 CM equipment shall be installed and surveyed in accordance with the RS rules, and a set of baseline readings shall be taken and recorded (in the RS reporting documents (report as per form 6.3.10), ship log books).

2.8.3.2 CM/CBM implementation survey.

2.8.3.2.1 The CM/CBM implementation survey shall be carried out by the RS surveyor no earlier than 6 months after installation survey and no later than the first class annual survey following the installation.

2.8.3.2.2 During the CM/CBM implementation survey the following shall be verified by the RS surveyor:

.1 the CM/CBM scheme is implemented according to the documentation approved by the Register, including a comparison with baseline data;

.2 the CM/CBM scheme is provided with the documentation required for the annual audit (annual survey) and the requirements of surveys and testing for the retainment of class are complied with;

.3 the onboard personnel are familiar with operating the CM/CBM scheme;

.4 records of any limiting parameters (alarms and warnings) modified during the operation of the CM/CBM scheme;

.5 records of any failures of monitored equipment shall be reviewed to ensure that the CM scheme is effective/sufficient.

2.8.3.2.3 When CM/CBM implementation survey is carried out and the CM/CBM implementation is found in order, a report describing the CM/CBM scheme shall be submitted to the Register and the system may be put into service.

2.8.3.3 Annual audit (Annual survey).

2.8.3.3.1 An annual audit (annual survey) of the CM and CBM scheme shall be carried out by the RS surveyor concurrently with the class annual survey.

2.8.3.3.2 The purpose of this audit (survey) shall be to verify that the CM/CBM scheme is being correctly operated and that the machinery has been functioning satisfactorily since the previous audit (survey). This shall include any limiting parameters (alarms and warnings) that have been modified since the previous audit (survey). In addition, a general examination of the items under the CM/CBM scheme shall be carried out

2.8.3.3.3 The performance, condition monitoring and maintenance records shall be examined to verify that the machinery has functioned satisfactorily since the previous survey, or action has been taken in response to machinery operating parameters exceeding acceptable tolerances.

2.8.3.3.4 Written details of break-down or malfunction shall be made available, if any.

2.8.3.3.5 At the discretion of the RS surveyor, function tests (operational tests), confirmatory surveys and random check readings, where CM/CBM equipment is in use, shall be carried out as far as practicable and reasonable.

2.8.3.3.6 The familiarity of the chief engineer and other personnel involved with the CM system shall be verified.

2.8.3.3.7 Calibration status of sensors shall be verified.

2.8.3.3.8 Verification that the suitability of the CM/CBM scheme has been reviewed following defects and failures shall be carried out.

2.8.3.4 Damage and repairs.

2.8.3.4.1 Damage to components or items of machinery shall be reported to the Register in no delay. The repairs of such damaged components or items of machinery shall be carried out and submitted to the satisfaction of the RS surveyor.

2.8.3.4.2 Details of repairs and necessary maintenance of the CM/CBM system carried out shall be agreed upon and examined by the Register. Any machinery part, which has been replaced by a spare one, due to damage, shall be retained on board until examined by RS surveyor.

2.8.3.4.3 Defect and failure data shall be reviewed by the RS surveyor in order to ensure the CM/CBM system output is appropriate. Where necessary, following review of the failure data, there shall be a method of amending the CM and CBM scheme.

2.9 SCHEME OF HARMONIZED SHIP SURVEY SYSTEM

2.9.1 Scheme of Harmonized Ship Survey System is given in Fig. 2.9.1.

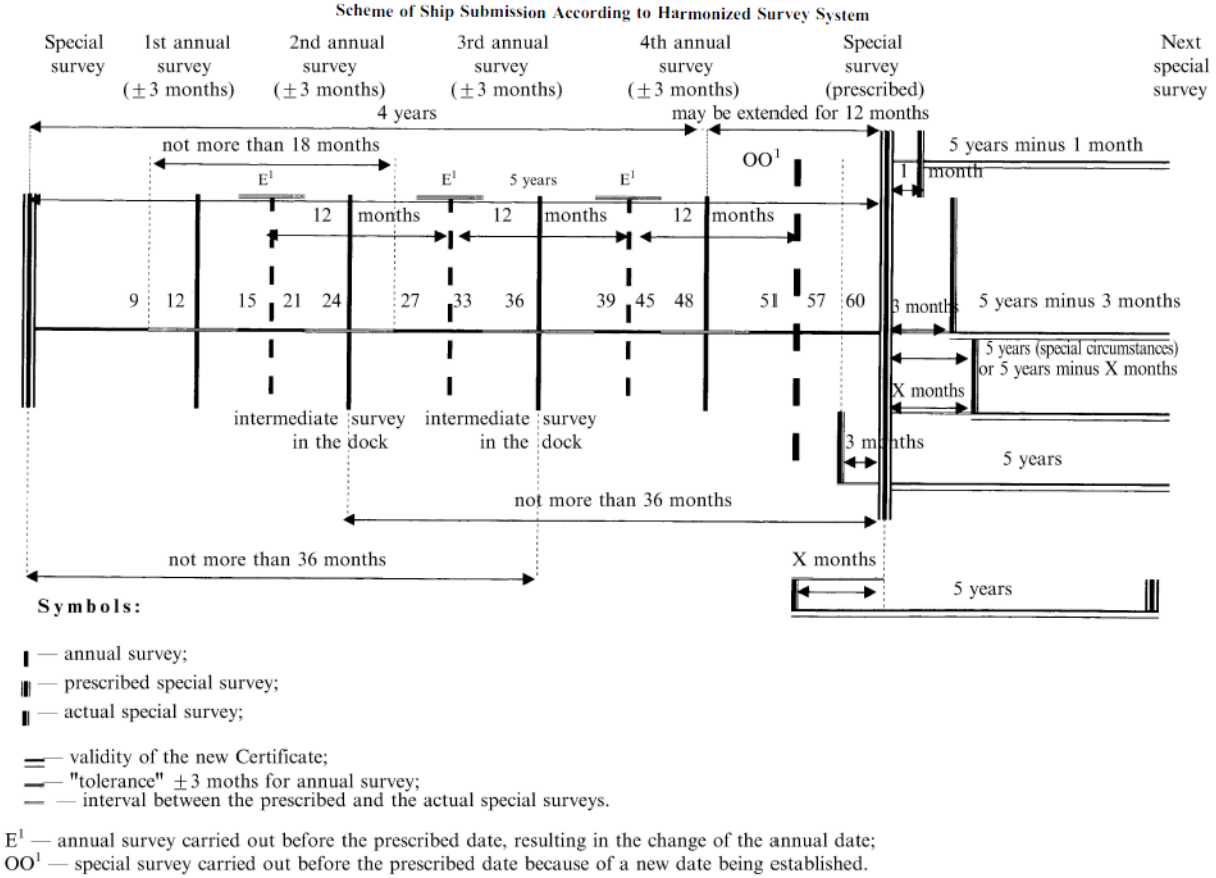

Fig. 2.9.1
scheme of Ship Submission According to Harmonized Survey System

2.10 SURVEY OF BOILERS

2.10.1 General.

2.10.1.1 The provisions of this Chapter apply to main, auxiliary and waste-heat boilers, including water heating boilers subject to the Register technical supervision, and thermal oil boilers as well as incinerator boilers, steam superheaters and economizers. Summarized scope of surveys is given in Table 2.1.1-1 of Part II "Survey Schedule and Scope".

2.10.1.2 Surveys of boilers are subdivided into:

external examination (2.10.2.1); or

internal survey (internal examination) (2.10.2.2); or

hydraulic tests (2.10.2.3).

2.10.1.3 Survey of incinerating part of the incinerators shall be carried out to comply with the requirements of 4.1.5, Part III "Survey of Ships in Compliance with International Conventions, Codes, Resolutions and Rules for the Equipment of Sea-Going Ship" of the Guidelines.

2.10.1.4 At special survey of ship boilers, it is recommended to use description of specific defects, which can be revealed in some boiler components, and the ways of their elimination specified in the internal normative documents on repair intended for the use of RS surveyors.

2.10.1.5 Schedule and scope of boiler surveys are specified in 2.10.2.

2.10.1.6 Compliance of boilers with the Rules for Construction shall be determined according to 2.10.3 of these Rules.

2.10.1.7 At the shipowner's discretion and subject to compliance with the requirements specified in Section 16, Part XVII "Distinguishing Marks and Descriptive Notations Specifying Structural and Operational Particulars of Ships" of the Rules for the Classification and Construction of Sea-Going Ships, the boiler monitoring system may be implemented on board the ship.

2.10.1.8 Where the boiler monitoring system is implemented on board the ship, the distinguishing mark BMS shall be added to the character of classification. Information on the system implementation shall be introduced to section "Other Characteristics" of the Classification Certificate (form 3.1.2), as well as to the classification section "Memoranda for Shipowners and Surveyors" of the List of Survey's Status (form 6.3.51-1).

2.10.1.9 The basic condition for retainment of the distinguishing mark **BMS** in the class notation is compliance with the requirements specified in 16.3 — 16.5, Part XVII "Distinguishing Marks and Descriptive Notations Specifying Structural and Operational Particulars of Ships" of the Rules for the Classification and Construction of Sea-Going Ships that shall be confirmed by the RS surveyor in the reporting documents at periodical survey of ship's machinery installation.

Distinguishing mark **BMS** may be deleted from the class notation in the following cases:

at the shipowner's discretion;

when, based on the ship survey results, the RS surveyor identifies that the system does not comply with the above requirements.

2.10.2 Schedule and scope of boiler survey.

2.10.2.1 External examination.

2.10.2.1.1 External examination of boilers together with fittings, equipment, serving machinery and heat exchangers, support systems and pipelines shall be carried out annually at periodical surveys of ship machinery installation.

2.10.2.1.2 Boilers shall be examined externally under working pressure. The waste-heat boilers under working pressure may be verified by the chief engineer at sea, which results will be credited to the annual/intermediate survey of a ship, only in case the verification in

the port of survey is impossible. The verification results shall be recorded in the log book by the chief engineer. Such verification shall be carried out within the survey window with submitting of the corresponding confirmation to RS.

2.10.2.1.3 At each external examination, the following shall be submitted to the RS surveyor, examined and operationally tested:

water level indicators;

face and bottom blow-down arrangements;

valve easing gears (feed, safety, shut-off, stop, blow-down valves, valves for deaeration, salinometer valves);

automatic control system, protective devices and alarms;

manual operation of the boiler.

2.10.2.1.4 Where defects have been detected during external examination, and their causes cannot be determined through the examination, the RS surveyor shall require the cause of the defect to be investigated and, if necessary, internal survey and/or hydraulic test to be carried out.

2.10.2.1.5 The adjustment of safety valves shall be verified during external examination of the boiler (refer to 2.10.4).

2.10.2.2 Internal survey (internal examination) of boilers.

2.10.2.2.1 Additional instructions and recommendations on carrying out internal survey (internal examination) of ship boilers based on their structural features are specified in 2.4.5.8.1, Part II "Carrying Out Classification Surveys of Ships" of the Guidelines.

2.10.2.2.2 For ships of 10 years of age and less, there shall be a minimum of two internal examinations of each steam boiler during each 5-year special survey period.

One such survey (examination) shall be carried out during special survey of the ship, the other shall be carried out at intervals not exceeding 36 months and shall be concurrent with periodical survey of the ship machinery installation.

2.10.2.2.3 For ships over 10 years of age, the internal survey (internal examination) of steam boilers shall be carried out during each periodical survey of the ship machinery installation, except for main water-tube steam boilers specified in 2.10.2.2.4.

2.10.2.2.4 Where two or more main water-tube steam boilers are installed on board the ship, the intervals between internal surveys (internal examinations) after the second special survey of the ship remain unchanged, i.e. the dates of internal surveys (internal examinations) are assigned in compliance with 2.10.2.2.2.

2.10.2.2.5 Thermal oil boilers shall be surveyed internally. There shall be a minimum of two internal surveys (internal examinations) of thermal oil boilers and of a heating surface during each 5-year special survey period regardless the ship's age.

One such survey shall be carried out during special survey of the ship, the other shall be carried out at intervals not exceeding 36 months and shall be concurrent with periodical survey of the ship machinery installation.

2.10.2.2.6 Boilers shall be surveyed internally after each significant repair (for instance, after furnaces (flame tubes) replacement or straightening, replacement of more than 25 % of short stays of the same wall or more than 15 % of the total number of sort stays, weld-in inserts, etc.) or replacement.

2.10.2.2.7 At internal survey, the boiler fittings and safety valves shall be submitted for examination. If internal survey is carried out during special survey, the results of boiler fittings testing for defects performed by the chief engineer or ship repair yard shall be submitted to the RS surveyor.

2.10.2.2.8 At each internal survey, the steam boilers, steam superheaters and economizers shall be examined internally on water-steam and fire side.

2.10.2.2.9 At internal survey of the waste-heat boilers, all accessible welded joints shall be subjected to a visual examination for cracking. On the RS surveyor decision, non-destructive testing may be required for this purpose.

2.10.2.2.10 Boilers inaccessible for internal survey shall be subjected to a hydraulic pressure test or to another alternative internal examination as decided by the RS surveyor. At special survey of a ship the provisions of 2.10.2.3.4 shall be met.

N o t e : A boiler, to any component of which (other than tubes of less than 200 mm in diameter under internal pressures) no access for visual examination from two sides is available, shall be considered inaccessible for thorough internal survey.

2.10.2.2.11 Before commencement of internal survey, preparation works shall be carried out with opening-up, providing access and dismantling. Both water-steam side and gas (fire) side of boilers shall be cleaned and subjected to internal survey.

2.10.2.2.12 Prior to commencement of internal survey, the RS surveyor shall be provided with measurement results of furnace (flame tube) diameters to determine tube general deformation, sketch of internal layout of headers and the tube plates (end plates) with marks indicating tube and tube plate condition (places and dates of tube plugs installation, their replacement or repairs), measurements of water or fire tube sagging and bending. The said measurements shall be carried out by the chief engineer and/or ship repair yard within periodical survey, prior to the survey to be performed by the RS surveyor.

2.10.2.2.13 For thermal oil boilers, the following shall be submitted prior to internal survey:

drawing of heating elements (coils) with marks indicating condition of coils, sagging and bending measurements of some coils carried out by the chief engineer and/or ship repair yard within periodical survey prior to the survey to be performed by the RS surveyor;

thermal oil analysis made by a recognized laboratory or a manufacturer of thermal oil to evaluate its fitness for further use;

manufacturer's quality certificate for thermal oil if it is replaced by the new one (the need for thermal oil analysis is determined by the RS surveyor).

2.10.2.2.14 Review of the following records made in the log book since the last survey of the boiler shall be carried out as a part of internal survey:

operating parameters;

maintenance;

repair history;

feed water chemistry.

2.10.2.2.15 An extension of the internal examination of the boiler up to 3 months beyond the due date can be granted in exceptional circumstances, such as unavailability of repair facilities, unavailability of essential materials, equipment or spare parts, or delays incurred by action taken to avoid severe weather conditions. Such extension may be granted by the Register after the following is carried out to the satisfaction of the RS surveyor:

.1 external examination of the boiler;

.2 for thermal oil boilers the following shall be submitted:

thermal oil analysis made by a recognized laboratory or a manufacturer of thermal oil to evaluate its fitness for further use;

manufacturer's quality certificate for thermal oil where the former is renewed if it is replaced by the new one (the need for thermal oil analysis is determined by the RS surveyor).

2.10.2.2.16 On board the ships, where the boiler monitoring system is implemented and maintained, the internal survey of steam boilers may be performed by chief engineer (in the scope specified in Section 16, Part XVII "Distinguishing Marks and Descriptive Notations Specifying Structural and Operational Particulars of Ships" of the Rules for the Classification and Construction of Sea-Going Ships) without the RS surveyor attendance.

Documentation on the internal survey performed shall be submitted to the RS surveyor for review at periodical survey of machinery installation.

Subject to satisfactory results of the above documentation review, the RS surveyor shall carry out the remaining scope of boiler survey specified in this Chapter. Where necessary, the RS surveyor may request to extend the scope of survey.

2.10.2.3 Hydraulic tests of boilers.

2.10.2.3.1 Additional instructions and recommendations on carrying out hydraulic tests of the ship boilers are given in 2.4.5.8.2, Part II "Carrying Out Classification Surveys of Ships" of the Guidelines.

2.10.2.3.2 The necessity of the steam boiler to be subjected to the hydraulic test shall be determined by the RS surveyor based on the internal survey results as well as on the type and scope of boiler repairs, if any.

2.10.2.3.3 Hydraulic testing of steam boilers after each significant repair (for instance, after furnace replacement or straightening, replacement of more than 25 % of short stays of the same wall or more than 15 % of the total number of sort stays, weld-in inserts, etc.) or replacement of piping systems is mandatory.

2.10.2.3.4 Steam boilers inaccessible for internal survey shall be subjected to the hydraulic test at each special survey of the ship (refer to 2.10.2.2.7).

2.10.2.3.5 Thermal oil boilers shall be hydraulically tested after each internal survey. It is allowed to perform tests using thermal oil from boilers, at that, the results of thermal oil analysis made by a recognized laboratory together with a conclusion on its fitness for further use shall be submitted to the RS surveyor.

2.10.2.3.6 Boilers shall be hydraulically tested, provided the following conditions are met:

boiler is completely filled with liquid (refer to 2.10.2.3.5) and free of air;

two tested pressure gauges are available;

temperature of liquid and ambient air temperature are not below + 5 °C. To prevent possible sweating, the temperature of the liquid shall be higher than the ambient air temperature;

pump operation shall not cause a drastic rise of pressure.

During hydraulic tests, the following is not allowed:

use of flexible hoses not cut off by valves during pressure exposure;

execution of any noisy works on board the ship;

pumping up to maintain test pressure during exposure to test pressure.

2.10.2.3.7 Priorto commencement of hydraulic testing, the RS surveyor shall verify that all the defects revealed at external examination and internal survey are eliminated, and manhole and scuttle seats fitted. Watertightness of safety valves shall be ensured by disabling regular springs.

2.10.2.3.8 At hydraulic tests of boilers, superheaters, economizers, the pressure shall be taken equal to 1,25$P_{working}$ but shall not be less than $P_{working}$ + 100 kPa. For boilers after significant repairs, the test pressure shall be taken equal to 1,5 $P_{working}$ but shall not be less than $P_{working}$ + 100 kPa.

2.10.2.3.9 After hydraulic tests, the boiler shall be examined externally in the scope specified in 2.10.2.1.

2.10.2.3.10 The boiler is recognized to have passed the test, unless examination reveals:

leakage;

local bulges;

noticeable changes of shape;

seam fractures; or

signs of integrity breakage of any part or joint.

2.10.2.3.11 During hydraulic testing, no falls of pressure shall be allowed.

2.10.2.3.12 Sweating or signs of water in expansion joints in the form of single non-leaking drops ("tears") shall not be considered a leakage. These signs are not allowed in weld seams such seams shall be cut off and welded again following the technique approved by the Register. Correction of weld seam defects by caulking, punching or other mechanical

procedure is not allowed. Elimination of revealed defects in the boiler under pressure, as well as welding of a boiler filled with water is not allowed.

2.10.3 Determination of the boiler compliance with the requirements of the Rules for Construction.

2.10.3.1 The boiler plant is found as compliant with the Rules for Construction, the survey revealed no defects, or the defects detected do not exceed permissible limits specified by the manufacturer. In case where no limits are specified, the requirements of this Chapter shall be met.

2.10.3.2 Boiler plants with inorganic coolant may be recognised fit for service until the next periodical survey, provided the revealed defects are non-progressive, such as:

bulges on flat walls of fire sides with a camber not more than plate thickness in the absence of damaged stays and signs of steaming;

deformation of furnaces (flame tubes) not exceeding 3 % calculated according to 2.4.5.8.1.2.1, Part II "Carrying Out Classification Surveys of Ships" of the Guidelines;

contraction of furnaces without deformation of circumference up to 5 % of as-built values, as well as local bulges with a camber not more than two thicknesses of furnace wall;

local pitting and grooving of boiler plates outside weld area, tube holes and flanging of ends with a depth of pock mark not more than 20 % of plate thickness and total area not more than 100 cm^2;

thinning of ends of fire tubes not more than by 30 % of the initial thickness in the place of rolling in the absence of burning and leaks;

thinning of ends of water-heating pipes in the place of rolling and their plungers by not more than 30 % of the initial thickness in the absence of leaks;

reduction of the transverse section areas of short and long stays by not more than 10 % of as-built thickness, if the number of thinned stays do not exceed 10 % of the stays strengthening this boiler wall;

plugged fire or boiler tubes in the amount not more than 10 % of the total number of tubes, provided the boiler tubes do not serve as a screen preventing overheating of other parts. It is allowed that not more than 5 % of the tubes serving as a screen are plugged, provided they are not located close to each other;

sagging of straight boiler tubes with a camber of up to 1 % of the tube length in the absence of steaming in the expansion joints.

2.10.3.3 Thermal oil boilers may be recognised fit for service until the next periodical survey, provided the revealed defects are non-progressive, such as:

sagging of coil branches with a camber of up to 1 % of the branch length in the absence of cracking in welds;

local pitting and grooving of coils at a depth of not more than 20 % of wall thickness and total area not more than 30 cm^2.

2.10.3.4 The following boiler defects are inadmissible:

defects of metal found during research and testing of the boiler material;

wear and damages exceeding permissible limits;

cracks in boiler components, breakage of stays, leakages in the welds;

leaks of tubes in tube plates;

destruction of setting of protected parts of steam-water and water headers and chambers or at least one of the boiler walls.

2.10.3.5 The boilers are found as not-compliant with the Rules for Construction, in case of failure of at least one pressure gauge, water-level indicator, safety valve, feed valve, stop valve, fuel quick-closing valve, remote control gear, as well as one of the following systems: protective and signalling systems of automated boiler plants, blow-down systems, feeding systems, fuel and air supply systems enabling safe operation of boiler plant.

2.10.3.6 If defects affecting the strength of some components (thinning of walls, wear of stays, etc.) are detected during survey of boilers, the class of the ship may be confirmed

only upon satisfactory results of review by RHO or the RS Branch Office carrying out the survey, prior to the first scheduled repair, or for the limited period at the reduced service parameters (working pressure).

Check strength calculations of the components under internal pressure performed considering reduction of working pressure shall be submitted to the Register for review.

Besides, the calculations to be submitted shall confirm that:

temperature of tube stack walls at the gas outlet is at least 140 °C;

velocity of steam-water mixture in the heating surfaces does not exceed 14 m/s;

satisfactory operation of steam pipelines is provided;

operation of equipment at reduced parameters will not affect the ship safety.

2.10.3.7 Waste-heat boilers are not allowed to operate at reduced steam pressure.

2.10.3.8 The necessity and possibility of the boiler plant continuous operation at reduced working pressure shall be determined by the shipowner on agreement with the boiler manufacturer. In this case, to confirm the boiler compliance with the requirements of the Rules for Construction, an occasional survey of the boiler shall be carried out in the scope specified in 2.10.2.1.

Where such agreement with the manufacturer is impossible for objective reasons, the occasional survey of the boiler shall be carried out in the following scope to confirm the boiler compliance with the Rules for Construction:

external examination (2.10.2.1);

internal survey (internal examination) (2.10.2.2);

hydraulic tests (2.10.2.3).

Entry on reducing the working pressure of the boiler plant shall be made in the List of Survey's Status by the RS surveyor carrying out the survey.

2.10.3.9 Metal condition monitoring of steam boilers, where necessary (suspicion about overheating of the metal of fire parts, systematic cracking and delamination, etc.) shall be carried out by non-destructive testing, as well as by mechanical tests, chemical analysis and metallographic examination. Method and technology of revealed defects elimination shall be agreed with the Register.

2.10.3.10 Corrosion wear of essential boiler components shall be determined by comparison of the measured residual thicknesses with the as-built (initial) thicknesses. In so doing, to determine the boiler plant compliance with the requirements of the Rules for Construction, the strength calculations of the relevant boiler components shall be made according to Section 2, Part X "Boilers, Heat Exchangers and Pressure Vessels" of the Rules for the Classification and Construction of Sea-Going Ships. The calculations shall be submitted to RHO for review.

2.10.4 Verification of safety valves adjustment.

2.10.4.1 The adjustment of safety valves shall be verified during each boiler external examination.

2.10.4.2 Safety valves of steam boilers shall be adjusted for the following valve opening pressure:

$P_{opening} \geq 1{,}05\ P_{working}$ for $P_{working} < 1$ MPa

$P_{opening} \leq 1{,}03\ P_{working}$ for boilers with $P_{working} \geq 1$ MPa.

In all cases, the safety valve shall be adjusted so that at fully opened condition the maximum pressure rise shall not exceed 1,1 $P_{working}$.

2.10.4.3 At fully opened condition, the safety valves of main and auxiliary boilers foressential services shall fully interrupt the outgoing steam flow in case of the pressure drop in the boiler not below 0,85 of the working pressure.

2.10.4.4 Safety valves of steam superheaters shall be adjusted for opening before the boiler valves.

2.10.4.5 If external examination and operational testing results are satisfactory, one of the boiler safety valves shall be sealed by the chief engineer in the presence of the surveyor to the Register, and the relevant record shall be made in the log book.

2.10.4.6 The adjust ent of safety valves of the waste-heat boilers may be verified by the chief engineer at sea, which results will be credited to the annual/intermediate survey of ship, only in case the verification at the port of survey is impossible. The verification results shall be recorded in the log book by the chief engineer. Such verification shall be carried out within the survey window with submitting of the corresponding confirmation to RS.

2.10.5 Drawing up boiler survey results.

2.10.5.1 The results of boiler plants survey shall be recorded in the relevant sections of the Survey checklist (form 6.1.01), and in justified cases, in the Report on Annual/Intermediate Survey of Machinery Installation, Systems (form 6.3.8) or in the Report on Special Survey of Machinery Installation and Systems (form 6.3.13).

2.10.5.2 An entry on the dates of the boiler surveys shall be made in the relevant section of the List of Survey's Status (form 6.3.51-1).

2.10.5.3 When assigning the dates of internal surveys (internal examinations) of boiler plants installed on board the ships of 10 years of age and less, the following shall be considered: the interval between two internal examinations (after boiler internal examination at initial/special survey of the ship) shall not exceed 36 months, but shall be within the window of the relevant periodical survey.

2.10.5.4 The results of occasional surveys of boiler plants may be drawn up by issuing the Report on Survey of the Ship (form 6.3.10) with making necessary entries in the relevant section of the List of Survey's Status.

2.11 SURVEY OF SHAFTING, PROPELLERS AND AMSS

2.11.1 General.

2.11.1.1 Provisions of this Chapter apply to shafting, propellers, pitch control units, and main AMSS. The summarized scope of surveys is given in item 4.5 of Table 2.1.1-1 of Part II "Survey Schedule and Scope".

2.11.1.2 Provisions of this Chapter shall apply to the nearest prescribed normal survey of shafting and main AMSS carried out after 1 January 2016.

2.11.1.3 Shafting survey intervals shall be determined depending on the material and structure of the stern shafts, type of connection between the propeller shaft and the propeller, type of the stern shaft lubrication and cooling system, as well as the applied survey Methods in accordance with 2.11.2 — 2.11.3.

Extension of prescribed periodical shafting surveys for a period stipulated by this Chapter shall be reviewed by RHO.

2.11.1.4 Survey intervals for the thrust and intermediate shafts shall be determined by 2.11.4.

2.11.1.5 In this Chapter, unless otherwise provided herein, flanged and cone connections are related to the connection between the propeller shaft and the propeller.

2.11.1.6 The provisions of this Chapter specify the requirements for components of shafting where the latter is located aft. In case of shafting located forward, the requirements for survey of its components shall apply symmetrically.

2.11.1.7 Additional instructions on survey of shafting, propellers and main AMSS are given in Annexes 13 and 35 to the Guidelines.

2.11.1.8 Items of technical supervision shall be properly prepared and cleaned to the extent that would eliminate the RS surveyor's doubts when assessing the technical condition of the items.

2.11.1.9 If survey of shafting, propeller or AMSS in accordance with this Chapter is not required or scheduled at survey of the outside of the ship's bottom in dry dock, they shall be surveyed in accordance with 2.5.7.5 and 2.5.7.6.

2.11.1.10 Consideration of shafting survey extension (refer to 2.11.2.9, 2.11.2.10 and 2.11.3.7) lies within the competence of:

for ships over 100 gross tonnage — RHO;

ships of 100 gross tonnage and less — RS Branch Office which will perform the relevant survey of the ship, or in case of the absence of the request for survey — RS Branch Office which is located in the area of permanent operation of the ship.

2.11.1.11 Application of provisions of this Chapter to ships owned or chartered by governments and used as combat or support ships in military operations, shall in each case be reviewed by RHO.

2.11.1.12 Recommendations on technical supervision during repair of shafting and propeller components are given in the internal normative documents on repair intended for the use of RS surveyors.

2.11.1.13 Cooling liquids analysis.

2.11.1.13.1 The analysis is required in the cases specified in this Chapter when oil or fresh water is used as cooling liquid.

2.11.1.13.2 Fresh water sample test and lubricating oil analysis shall be carried out once within 6 months, unless otherwise is required by this Chapter.

2.11.1.13.3 Recommendations on the cooling liquid analysis are given in Annex 13 to the Guidelines.

2.11.2 Survey schedule and methods for oil lubricated shafts or closed loop system fresh water lubricated shafts.

2.11.2.1 Intervals between surveys carried out according to various Methods (including alternation of Methods) are established in accordance with 2.11.2.10 depending on the Method applied during last survey, as well as in accordance with Table 2.11.2.

The shipowner elects to carry out shafting survey according to Method 2 or Method 3 (alternation of methods) between the surveys according to Method 1. The possibility of shafting survey according to Method 2 or Method 3 as elected by the shipowner shall be evaluated by the RS surveyor on board the ship taking into account conditions specified in 2.11.2.7 and 2.11.2.8.

Between surveys carried out according to Method 1, Method 2 and Method 3, the shafting is subject to annual surveys in accordance with 2.2.5.6 or 2.3.3.3.

Table 2.11.2

Survey intervals for oil lubricated shafts or closed loop system fresh water lubricated shafts (closed systems). Survey extensions

	Flanged propeller connection (coupling)	Cone keyless propeller connection (coupling)	Cone keyed propeller connection (coupling)[1]
Oil lubricated shafts			
Every 5 years[2]	Method 1[3] or	Method 1[3] or	Method 1[3] or
	Method 2 or	Method 2 or	Method 2
	Method 3	Method 3[4]	
Extension up to 2,5 years	Applicable[5]	Applicable[5]	Applicable[5]
Extension up to 1 year	Applicable[6]	Applicable[6]	Applicable[6]
Extension up to 3 months	Applicable[7]	Applicable[7]	Applicable[7]
Closed loop system fresh water lubricated shafts			
Every 5 years[2]	Method 1[8] or	Method 1[8] or	Method 1[8] or
	Method 2 or	Method 2 or	Method 2
	Method 3	Method 3[4]	
Extension up to 2,5 years	Applicable[5]	Applicable[5]	Applicable[5]
Extension up to 1 year	Applicable[6]	Applicable[6]	Applicable[6]
Extension up to 3 months	Applicable[7]	Applicable[7]	Applicable[7]

[1] Survey according to Method 3 is not allowed for this type of connection (coupling).
[2] Unless an extension type (extension up to 2,5 years, 1 year or 3 months) is applied in between the surveys carried out according to one of the Methods.
[3] In case of methods alternation, the maximum interval between two surveys according to Method 1 shall generally not exceed 22,5 years.
[4] The maximum interval between two surveys carried out according to Method 1 or Method 2 shall not exceed 15 years, except in the case when one extension for no more than 3 months is granted.
[5] No more than one extension can be granted. No further extension of other type can be granted.
[6] No more than two consecutive extensions can be granted. In the event an additional extension is requested, the occasional survey shall be carried out to apply extension up to 2,5 years. The next survey due date is extended for a maximum of 2,5 years from the original due date of shafting survey.
[7] No more than one three months extension can be granted. In the event an additional extension is requested, the occasional survey shall be carried out to apply extension up to 1 year or 2,5 years. The next survey due date is extended for a maximum of 1 year or 2,5 years from the original due date of shafting survey.
[8] In case of methods alternation, the maximum interval between two surveys according to Method 1 shall not exceed 15 years.

2.11.2.2 Survey extensions are specified in 2.11.2.9.

2.11.2.3 Survey intervals.

2.11.2.3.1 For surveys (according to any method) completed within 3 months before the shafting survey due date, the next period shall start from the original due date of shafting survey.

2.11.2.3.2 For surveys (according to any method) completed more than 3 months before the shafting survey due date, the next period shall start from the actual date of shafting survey completion.

2.11.2.3.3 For surveys (according to any method) completed after the shafting survey due date, the next period shall start from the actual date of shafting survey completion.

2.11.2.3.4 Notwithstanding the provisions of 2.11.2.3.1 — 2.11.2.3.3, for shafting survey carried out concurrently with the intermediate or special survey of the ship, or survey of the outside of the ship's bottom in dry dock, the next period may start from the actual date of completion of the survey performed concurrently, provided the following conditions are met:

shafting survey is completed before the actual date of completion of the survey performed concurrently, or is completed at the same time with it;

within the whole period from the date of shafting survey completion to the actual date of completion of the survey performed concurrently, the ship didn't leave the port/shipyard waters where surveys were carried out.

2.11.2.4 Survey extensions.

2.11.2.4.1 An extension of shafting surveyis granted on the basis of occasional survey in accordance with 2.11.2.9.

2.11.2.4.2 The occasional survey shall be carried out within 1 month of the shafting survey due date. In this case, the extension counts from the original due date of shafting survey.

2.11.2.4.3 If the occasional survey is carried out more than 1 month prior to the shafting survey due date, then the period of extension counts from the actual date of occasional survey completion.

2.11.2.5 Shafting survey methods.

Shafting shall be surveyed according to one of the following Methods:

Method 1 — normal survey;

Method 2 — modified survey;

Method 3 — partial survey.

2.11.2.6 Method 1 — normal survey.

2.11.2.6.1 Normal survey of shafting (Method 1) shall be carried out with drawing the stern shaft and providing access for visual examination and measurements of the entire shaft, as well as stern bushes and sealings.

2.11.2.6.2 The stern shaft is subject to visual examination for bending, cracking or other damage.

Where there is reason to suspect bending, the RS surveyor shall require the shaft testing on the balancing machine.

In case of damages and defects, the shaft shall be repaired using the RS-approved technology (refer to 2.11.1.12).

2.11.2.6.3 The sterntube sealing arrangement is subject to thorough examination for integrity of its components.

The rubber components (rings, glands, sealing, etc.) shall be replaced according to the manufacturer's instructions or based on the examination results.

The sterntube seals shall be pressure tested in accordance with the manufacturer's recommendations.

2.11.2.6.4 The sterntube shall be subject to thorough examination. Condition of the sterntube bearings and strut bearings, securing of the sterntube and bushes, and condition of other parts shall be checked during examination.

2.11.2.6.5 For survey of the cone connection (keyed or keyless), the propeller shall be removed.

The cylindrical part of the propeller shaft (between the journal and the cone), the cone (especially the forward end) and keyway (if fitted) are subject to thorough examination.

For crack detection, about 1/3 of the cone length from the large end including the key way (if fitted) shall be subject to NDT by the RS-approved method. For shaft provided with liners, the NDT shall include the cylindrical part of the shaft and shall be extended to the after

edge of the liner. Results of testing for defects using NDT methods shall be submitted to the RS surveyor.

2.11.2.6.6 At survey of the flange-connected shaft, its cylindrical part (between the journal and the flange), flange and fillet are subject to thorough examination.

Whenever the coupling bolts of any type of flange-connected shaft are removed or the flange fillet is made accessible in connection with overhaul, repairs or when deemed necessary by the RS surveyor, the coupling bolts and the flange fillet shall be subject to NDT by means of the RS-approved crack detection method.

2.11.2.6.7 After removal of the propeller shaft, its journals and sterntube bearings shall be measured, in the presence of the RS surveyor, at three cross sections along the length and in up-and-down and port or starboard directions. The measurements shall be submitted to the RS surveyor.

2.11.2.6.8 For closed loop system fresh water lubricated shafts (closed system), condition of liners and protective coating of the interlining space (if any) shall be checked. If non-integrity, mechanical damage or lack of adhesions found in the lining or protective coating, the RS surveyor shall require the repair followed, if necessary, by the shaft testing for defects using NDT methods.

2.11.2.6.9 The propeller shall be subject to thorough examination to confirm that it is free of damages which may cause the propeller to be out of balance, and shall be subject to survey in accordance with 2.11.9.

2.11.2.6.10 Satisfactory condition of forward (inboard) and aftermost (outboard) sterntube seals shall be verified during the re-installation of the shaft and propeller.

2.11.2.6.11 After the propeller re-installation, sterntube bearing clearances and shaft dropping shall be measured in the presence of the RS surveyor. The measurements (recordings) shall be submitted to the RS surveyor.

2.11.2.6.12 After the propeller installation, its seals shall be examined and pressure tested.

Propeller installation parameters (force and propeller axial pull-up) shall be submitted to the RS surveyor.

2.11.2.6.13 After assembly, the shafting alignment shall be verified by the RS-approved method in accordance with 2.11.6. The shafting alignment results shall be submitted to the RS surveyor.

2.11.2.7 Method 2 — modified survey.

2.11.2.7.1 Modified survey of the shafting according to Method 2 shall be carried out without drawing/ shifting of the stern shaft.

2.11.2.7.2 Method 2 may apply only if the shipowner has implemented and maintains a documented shafting condition monitoring system (hereinafter referred to as "the SCM system"), minimum requirements for which are given in Annex 13 to the Guidelines.

2.11.2.7.3 Implementation and maintenance of the SCM system shall be confirmed by the RS surveyor at the first use in accordance with Annex 13 to the Guidelines. The efficiency of the implemented SCM system shall be subsequently checked by the surveyor at each shafting survey carried out according to any Method.

The propeller shaft condition monitoring (PCM) system, if implemented on board earlier and duly maintained, is considered equivalent to the SCM system and sufficient for the shafting survey according to Method 2.

2.11.2.7.4 The shipowner shall timely implement and further maintain the SCM system, which will be recognized at shafting survey provided that:

the SCM system shall be implemented by the shipowner during shafting survey according to Method 1 (i.e. normal survey) in compliance with Annex 13 to the Guidelines, or within 12 months after completion of the shafting survey. The system implemented later shall be reviewed by RHO;

the SCM system shall be duly maintained by the shipowner so that the RS surveyor could, at the next nearest periodical survey of a ship, provide the documentary evidence confirming the system efficiency;

the SCM system shall be duly maintained by the shipowner so that the RS surveyor could, at subsequent shafting surveys according to any Method, confirm the system efficiency and use it during survey.

2.11.2.7.5 For survey of the cone connection (keyed or keyless), the propeller shall be removed.

The cylindrical part of the propeller shaft (between the journal and the cone), the cone (especially the forward end) and keyway (if any) are subject to thorough examination.

For crack detection, about 1/3 of the cone length from the large end including the key way (if fitted) shall be subject to NDT by the RS-approved method. For shaft provided with liners, the NDT shall include the cylindrical part of the shaft and shall be extended to the after edge of the liner. Results of testing for defects using NDT methods shall be submitted to the RS surveyor.

2.11.2.7.6 At survey of the flange-connected shaft, its cylindrical part (between the journal and the flange), flange and fillet are subject to thorough examination.

Whenever the coupling bolts of any type of flange-connected shaft are removed or the flange fillet is made accessible in connection with overhaul, repairs or when deemed necessary by the RS surveyor, the coupling bolts and the flange fillet shall be subject to NDT by means of RS-approved method for crack detection.

2.11.2.7.7 The fore bearing and all accessible parts of the shaft shall be examined to the maximum possible extent.

2.11.2.7.8 Sterntube bearing clearances and/or shaft dropping shall be measured in the presence of the RS surveyor. The measurements (recordings) shall be submitted to the RS surveyor.

2.11.2.7.9 All accessible shafting components shall be subject to visual examination.

2.11.2.7.10 The propeller shall be subject to thorough examination to confirm that it is free of damages which may cause the propeller to be out of balance, and shall be subject to survey in accordance with 2.11.9.

2.11.2.7.11 Disassembled gland devices shall be examined for significant mechanical wear to determine whether they are in satisfactory condition or require repair/replacement.

2.11.2.7.12 After the propeller installation, its seals shall be examined and pressure tested.

Propeller installation parameters (force and propeller axial pull-up) shall be submitted to the RS surveyor.

2.11.2.7.13 Satisfactory condition of the propeller, forward (inboard) and aftermost (outboard) sterntube seals shall be verified during the re-installation of the propeller.

2.11.2.7.14 Pre-requisites to satisfactorily verify the following in order to apply Method 2 (in addition to the requirements of 2.11.2.7.2) at shafting survey:

review of service records (ship and/or machinery logs showing in-service conditions, repairs and damages of the shafting and propeller);

review of the previous sterntube bearing clearance and shaft dropping recordings;

review of the previous test records of lubricating oil analysis (for oil lubricated shafts);

review of the previous test records of fresh water sample test (for closed system fresh water lubricated shafts);

review of oil sample examination (for oil lubricated shafts) or fresh water sample test (for closed system fresh water lubricated shafts) performed by a recognized laboratory during the survey in question;

review of lubricating oil/fresh water consumption and temperature records for shafting cooling system.

2.11.2.7.15 If while implementing SCM, the shipowner has the intention to submit the shafting for subsequent surveys according to Method 2 only, the distinguishing mark **TMS** (tailshaft modified survey[1]) (refer to 2.2.33, Part I "Classification" of the Rules for the Classification and Construction of Sea-Going Ships) shall be added to the character of classification.

2.11.2.7.16 Upon satisfactory completion of the shafting survey according to Method 2, the distinguishing mark **TMS** shall be retained in the class notation.

2.11.2.7.17 The distinguishing mark **TMS** shall be deleted from the class notation in the following cases:

the ship is withdrawn from the SCM system;

the shafting has been submitted for survey carried out according to the Method other than Method 2.

Therewith, the ship's class shall be retained.

2.11.2.8 Method 3 — partial survey.

2.11.2.8.1 Partial survey of the shafting according to Method 3 shall be carried out without drawing/ shifting of the stern shaft or propeller removal.

2.11.2.8.2 Method 3 may apply only if the shipowner has implemented and maintains on board a documented SCM system as specified in 2.11.2.7.2 — 2.11.2.7.4.

2.11.2.8.3 All accessible shafting components shall be subject to visual examination.

2.11.2.8.4 Sterntube bearing clearances and/or shaft dropping shall be measured in the presence of the RS surveyor. The measurements (recordings) shall be submitted to the RS surveyor.

2.11.2.8.5 The propeller shall be subject to thorough examination to confirm that it is free of damages which may cause the propeller to be out of balance, and shall be subject to survey in accordance with 2.11.9.

2.11.2.8.6 Disassembled gland devices shall be examined for significant mechanical wear to determine whether they are in satisfactory condition or require repair/replacement.

2.11.2.8.7 Satisfactory condition of the forward (inboard) and aftermost (outboard) sterntube seals shall be verified.

2.11.2.8.8 Pre-requisites to satisfactorily verify the following in order to apply Method 3 (in addition to the requirements of 2.11.2.8.2) at shafting survey:

review of service records (ship and/or machinery logs showing in-service conditions, repairs and damages of the shafting and propeller);

review of the previous sterntube bearing clearance and shaft dropping recordings;

review of the previous test records of fresh water sample test (for closed system fresh water lubricated shafts);

review of oil sample examination (for oil lubricated shafts) or fresh water sample test (for closed system fresh water lubricated shafts) performed by a recognized laboratory during the survey in question;

review of lubricating oil/fresh water consumption and temperature records for shafting cooling system.

2.11.2.9 Shafting extension surveys.

2.11.2.9.1 For surveys carried out according to Method 1, or Method 2 or Method 3 extensions can be granted. The competence to consider shafting survey extension is determined in 2.11.1.10.

2.11.2.9.2 Extension types:

extension up to 2,5 years (30 months);

extension up to 1 year (12 months);

extension up to 3 months.

---

[1] The term "tailshaft" means "propeller shaft".

2.11.2.9.3 Extension up to 2,5 years (30 months).

2.11.2.9.3.1 The extension may be granted in case of satisfactory results of the shafting and propeller occasional survey with the use of underwater television. The survey shall consist of:

visual examination of all accessible shafting components both inboard and outboard;

checking and recording of measurements of the sterntube bearing clearances and shaft dropping, as far as practicable. The measurements (recordings) shall be submitted to the RS surveyor;

verification that the propeller is free of damages which may cause the propeller to be out of balance;

verification of effectiveness of the forward (inboard) and aftermost (outboard) sterntube seals.

2.11.2.9.3.2 Pre-requisites to satisfactorily verify the following in order to apply extension up to 2,5 years at the shafting occasional survey:

review of service records (ship and/or machinery logs showing in-service conditions, repairs and damages of the shafting and propeller);

review of the previous test records of lubricating oil analysis (for oil lubricated shafts);

review of the previous test records of fresh water sample test (for closed system fresh water lubricated shafts);

review of oil sample examination (for oil lubricated shafts), or fresh water sample test (for closed system fresh water lubricated shafts) performed by the recognized laboratory during the survey in question;

written confirmation from the chief engineer that the shafting components are in good working condition.

2.11.2.9.4 Extension up to 1 year (12 months).

2.11.2.9.4.1 The extension may be granted in case of satisfactory results of the shafting and propeller occasional survey with the use of underwater television. The survey shall consist of:

visual examination of all accessible shafting components both inboard and outboard;

verification that the propeller is free of damages which may cause the propeller to be out of balance;

verification of the effectiveness of the forward (inboard) and aftermost (outboard) sterntube seals.

2.11.2.9.4.2 Pre-requisites to satisfactorily verify the following in order to apply extension up to 1 year at the shafting occasional survey:

review of service records (ship and/or machinery logs showing in-service conditions, repairs and damages of the shafting and propeller);

review of the previous sterntube bearing clearance and shaft dropping recordings;

review of the previous test records of lubricating oil analysis (for oil lubricated shafts);

review of the previous test records of fresh water sample test (for closed system fresh water lubricated shafts);

review of oil sample examination (for oil lubricated shafts), or fresh water sample test (for closed system fresh water lubricated shafts) performed by a recognized laboratory during the survey in question;

written confirmation from the chief engineer that the shafting components are in good working condition.

2.11.2.9.5 Extension up to 3 months.

2.11.2.9.5.1 The extension shall be granted in case of satisfactory results of the shafting occasional survey. The survey shall consist of:

visual examination of all accessible shafting components inboard;

verification of the effectiveness of the forward (inboard) seal.

2.11.2.9.5.2 Pre-requisites to satisfactorily verify the following in order to apply extension up to 3 months at the shafting occasional survey:

review of service records (the ship and/or machinery logs showing in-service conditions, repairs and damages of the shafting and propeller);

review of the previous sterntube bearing clearance and shaft dropping recordings;

review of the previous test records of lubricating oil analysis (for oil lubricated shafts);

review of the previous test records of fresh water sample test (for closed system fresh water lubricated shafts);

review of oil sample examination (for oil lubricated shafts) or fresh water sample test (for closed system fresh water lubricated shafts) performed by a recognized laboratory during the survey in question;

written confirmation from the chief engineer that the shafting components are in good working condition.

2.11.2.10 Survey schedule.

2.11.2.10.1 Oil lubricated shafts.

The maximum interval between two surveys carried out according to Method 1 shall generally not exceed 22,5 years (including extensions). Extension of this interval shall be reviewed by the Register in each case and be within the competence as determined in 2.11.1.10.

2.11.2.10.1.1 In case of flanged propeller connection, the shafting shall be surveyed every 5 years according to one of the following Methods:

Method 1 (refer to 2.11.2.6); or

Method 2 (refer to 2.11.2.7) if pre-requisites specified in 2.11.2.7.2 and 2.11.2.7.14 have been fulfilled; or

Method 3 (refer to 2.11.2.8) if pre-requisites specified in 2.11.2.8.2 and 2.11.2.8.8 have been fulfilled.

2.11.2.10.1.2 In case of cone keyless propeller connection, the shafting shall be surveyed every 5 years according to one of the following Methods:

Method 1 (refer to 2.11.2.6); or

Method 2 (refer to 2.11.2.7) if pre-requisites specified in 2.11.2.7.2 and 2.11.2.7.14 have been fulfilled; or

Method 3 (refer to 2.11.2.8) if pre-requisites specified in 2.11.2.8.2 and 2.11.2.8.8 have been fulfilled. No more than two consecutive surveys according to Method 3 may be carried out.

The maximum interval between two surveys carried out according to Method 1 or Method 2 shall not exceed 15 years, except in the case when one extension for no more than 3 months is granted.

2.11.2.10.1.3 In case of cone keyed propeller connection, the shafting shall be surveyed every 5 years according to one of the following Methods:

Method 1 (refer to 2.11.2.6); or

Method 2 (refer to 2.11.2.7) if pre-requisites specified in 2.11.2.7.2 and 2.11.2.7.14 have been fulfilled.

2.11.2.10.1.4 Survey extensions.

For all types of propeller connections, the interval between two consecutive shafting surveys may be extended based on occasional survey results, and extensions can be granted in accordance with 2.11.2.9 taking into account the provisions of 2.11.2.4 and the following:

extension up to 2,5 years (30 months): no more than one extension up to a maximum of 2,5 years can be granted in every 5-year period between surveys according to Method 1, Method 3 or Method 2. No further extensions, of other type (up to 1 year or 3 months), can be granted;

extension up to 1 year (12 months): no more than two consecutive extensions up to a maximum of 1 year can be granted in every 5-year period between surveys according to Method 1, Method 2 or Method 3. In the event an additional extension is requested the occasional survey shall be carried out to apply extension up to 2,5 years. The next survey due date is extended for a maximum of 2,5 years from the original due date of shafting survey. No further extensions, of other type, can be granted;

extension up to 3 months: no more than one extension up to a maximum of 3 months can be granted in every 5-year period between surveys according to Method 1, Method 2 or Method 3. In the event an additional extension is requested, the occasional survey shall be carried out to apply extension up to 1 year or 2,5 years. The next survey due date is extended for a maximum of 1 year or 2,5 years from the original due date of shafting survey.

2.11.2.10.2 Closed loop system fresh water lubricated shafts.

The maximum interval between two surveys carried out according to Method 1 shall not exceed 15 years. This maximum period may be extended and an extension for no more than 3 months can be granted.

2.11.2.10.2.1 In case of flanged propeller connection, the shafting shall be surveyed every 5 years according to one of the following Methods:

Method 1 (refer to 2.11.2.6); or

Method 2 (refer to 2.11.2.7) if pre-requisites specified in 2.11.2.7.2 and 2.11.2.7.14 have been fulfilled; or

Method 3 (refer to 2.11.2.8) if pre-requisites specified in 2.11.2.8.2 and 2.11.2.8.8 have been fulfilled.

2.11.2.10.2.2 In case of cone keyless propeller connection, the shafting shall be surveyed every 5 years according to one of the following Methods:

Method 1 (refer to 2.11.2.6); or

Method 2 (refer to 2.11.2.7) if pre-requisites specified in 2.11.2.7.2 and 2.11.2.7.14 have been fulfilled; or

Method 3 (refer to 2.11.2.8) if pre-requisites specified in 2.11.2.8.2 and 2.11.2.8.8 have been fulfilled.

2.11.2.10.2.3 In case of cone keyed propeller connection, the shafting shall be surveyed every 5 years according to one of the following Methods:

Method 1 (refer to 2.11.2.6); or

Method 2 (refer to 2.11.2.7) if pre-requisites specified in 2.11.2.7.2 and 2.11.2.7.14 have been fulfilled.

2.11.2.10.2.4 Survey extensions.

For all types of propeller connections, the interval between two consecutive shafting surveys may be extended based on occasional survey results, and extensions can be granted in accordance with 2.11.2.9 taking into account the provisions of 2.11.2.4 and the following:

extension up to 2,5 year (30 months): no more than one extension up to a maximum of 2,5 years can be granted in every 5-year period between surveys according to Method 1, Method 2 or Method 3. No further extensions, of other type (up to 1 year or 3 months) can be granted;

extension up to 1 year (12 months): no more than two consecutive extensions up to a maximum of 1 year may be granted in every 5-year period between surveys according to Method 1, Method 2 or Method 3. In the event an additional extension is requested, the occasional survey shall be carried out to apply extension up to 2,5 years. The next survey due date is extended for a maximum of 2,5 years from the original due date of shafting survey. No further extensions, of other type, can be granted;

extension up to 3 months: no more than one extension up to a maximum of 3 months can granted in every 5-year period between surveys according to Method 1, Method 2 or Method 3. In the event an additional extension is requested the occasional survey shall be

carried out to apply extension up to 1 year or 2,5 years. The next survey due date is extended for a maximum of 1 year or 2,5 years from the original due date of shafting survey.

2.11.3 Survey schedule and methods for open loop system seawater lubricated shafts.

2.11.3.1 Survey intervals are established in accordance with 2.11.3.8 and Table 2.11.3.

Between surveys according to Method 4, the shafting is subject to annual surveys in accordance with 2.2.5.6 or 2.3.3.3.

Table 2.11.3

Survey intervals for open loop system seawater lubricated shafts (open systems). Survey extensions

Configurations of open loop system seawater lubricated shafts			
Single shaft operating exclusively in fresh water Single shaft provided with corrosion prevention system Single corrosion resistant shaft All kinds of multiple shafts arrangements		Other shaft configurations	
Any kinds of propeller connection (coupling)[1]		Any kinds of propeller connection (coupling)[1]	
Every 5 years[2]	Method 4	Every 3 years[2]	Method 4
Extension up to 1 year	Applicable[3]	Extension up to 1 year	Applicable[3]
Extension up to 3 months	Applicable[4]	Extension up to 3 months	Applicable[4]

[1] For cone keyless propeller connections, the maximum interval between two consecutive propeller removals and verifications of the shaft cone by means of NDT using the RS-approved method shall not exceed 15 years.
[2] Unless an extension type (extension up to 1 year or extension up to 3 months).
[3] No more than one extension can be granted. No further extension, of other type, can be granted.
[4] No more than one extension can be granted. In the event an additional extension is requested, the occasional survey shall be carried out to apply extension up to 1 year. The next survey due date is extended up to 1 year from the original due date of shafting survey.

2.11.3.2 Survey extensions are specified in 2.11.3.7.

2.11.3.3 Survey intervals.

2.11.3.3.1 For surveys carried out according to Method 4 (refer to 2.11.3.6) completed within 3 months before the shafting survey due date, the next period shall start from the original due date of shafting survey.

2.11.3.3.2 For surveys carried out according to Method 4 completed more than 3 months before the shafting survey due date, the next period shall start from the actual date of shafting survey completion.

2.11.3.3.3 For surveys according to Method 4 completed after the shafting survey due date, the next period shall start from the actual date of shafting survey completion.

2.11.3.3.4 Notwithstanding the provisions of 2.11.3.3.1 — 2.11.3.3.3, for shafting survey carried out concurrently with the intermediate or special survey of the ship, or survey of the outside of the ship's bottom in dry dock, the next period may start from the actual date of completion of the survey performed concurrently, provided the following conditions are met:

shafting survey is completed before the actual date of completion of the survey performed concurrently, or is completed at the same time with it;

within the whole period from the date of shafting survey completion to the actual date of completion of the survey performed concurrently, the ship didn't leave the port/shipyard waters where surveys were carried out.

2.11.3.4 Survey extensions.

2.11.3.4.1 An extension of shafting survey is granted on the basis of occasional survey in accordance with 2.11.3.7.

2.11.3.4.2 The occasional survey shall be carried out within 1 month of the shafting survey due date. In this case, the extension period counts from the original due date of shafting survey.

2.11.3.4.3 If the occasional survey is carried out more than 1 month prior to the shafting survey due date, then the period of extension counts from the actual date of occasional survey completion.

2.11.3.5 Shafting survey Methods.

Shafting shall be surveyed according to Method 4.

2.11.3.6 Method 4 — normal survey.

2.11.3.6.1 Normal shafting survey (Method 4) shall be carried out with drawing the stern shaft and providing access for visual examination and measurements of the entire shaft, as well as stern bushes and sealings.

2.11.3.6.2 The stern shaft is subject to visual examination for bending, cracking or other damage.

Where there is reason to suspect bending, the RS surveyor shall require the shaft testing on the balancing machine.

In case of damages and defects, the shaft shall be repaired using the RS-approved technology (refer to 2.11.1.12).

2.11.3.6.3 Sterntube is subject to thorough examination. Condition of the sterntube bearings, strut bearings, securing of the sterntube and bushes, and condition of the forward (inboard) seal, corrosion prevention system and stress reducing features, where provided, shall be checked during examination.

2.11.3.6.4 For survey of the cone connection (keyed or keyless), the propeller shall be removed.

The cylindrical part of the propeller shaft (between the journal and the cone), the cone (especially the forward portion) and keyway (if fitted) are subject to thorough examination.

For crack detection, about 1/3 of the cone length from the large end including the key way (if fitted) shall be subject to NDT by the RS-approved method. For shaft provided with liners, the NDT shall include the cylindrical part of the shaft and shall be extended to the after edge of the liner. Results of testing for defects using NDT methods shall be submitted to the RS surveyor.

2.11.3.6.5 At survey of the flange-connected shaft, its cylindrical part (between the journal and the flange), flange and fillet are subject to thorough examination.

Whenever the coupling bolts of any type of flange-connected shaft are removed or the flange fillet is made accessible in connection with overhaul, repairs or when deemed necessary the RS surveyor, the coupling bolts and the flange fillet shall be subject to NDT by means of the RS-approved method for crack detection.

2.11.3.6.6 After removal of the propeller shaft, its journals and sterntube bearings shall be measured, in the presence of the RS surveyor, in three cross sections throughout the length and in up-and-down and right-and-left directions. The measurements shall be submitted to the RS surveyor.

2.11.3.6.7 Condition of liners and protective coating of the interlining space (if any) shall be checked. If non-integrity, mechanical damage or lack of adhesion is found in the lining or protective coating, the RS surveyor shall require the repair followed, if necessary, by the shaft testing for defects using NDT methods.

2.11.3.6.8 The propeller shall be subject to thorough examination to confirm that it is free of damages which may cause the propeller to be out of balance, and shall be subject to survey in accordance with 2.11.9.

2.11.3.6.9 Satisfactory condition of forward (inboard) seals shall be verified during re-installation of the shaft and propeller.

2.11.3.6.10 After the propeller re-installation, sterntube bearing clearances shall be measured in the presence of the RS surveyor. The measurements (recordings) shall be submitted to the RS surveyor.

2.11.3.6.11 After the propeller installation, its seals shall be examined and pressure tested.

Propeller installation parameters (force and propeller axial pull-up) shall be submitted to the RS surveyor.

2.11.3.6.12 After assembly, the shafting alignment shall be verified by the RS-approved method in accordance with 2.11.6. The shafting alignment results shall be submitted to the RS surveyor.

2.11.3.7 Survey extensions.

2.11.3.7.1 For surveys according to Method 4, extensions can be granted. The competence to consider shafting survey extension is determined in 2.11.1.10.

2.11.3.7.2 Extension types:

extension up to 1 year (12 months);

extension up to 3 months.

2.11.3.7.3 Extension up to 1 year (12 months).

2.11.3.7.3.1 The extension can be granted in case of satisfactory results of the shafting and propeller occasional survey with the use of underwater television. The survey shall consist of:

visual examination of all accessible shafting components both inboard and outboard;

verification that the propeller is free of damages which may cause the propeller to be out of balance;

checking and recording the sterntube bearing clearance measurements. The measurements (recordings) shall be submitted to the RS surveyor;

verification of the effectiveness of the forward (inboard) sterntube seal.

2.11.3.7.3.2 Pre-requisites to satisfactorily verify the following in order to apply extension up to 1 year at the shafting occasional survey:

review of service records (ship and/or machinery logs showing in-service conditions, repairs and damages of the shafting and propeller);

review of the previous sterntube bearing clearance recordings;

written confirmation from the chief engineer that the shafting components are in good working condition.

2.11.3.7.4 Extension up to 3 months.

2.11.3.7.4.1 The extension shall be granted in case of satisfactory results of the shafting occasional survey. The survey shall consist of:

visual examination of all the accessible shafting components inboard.

verification of the effectiveness of the forward (inboard) sterntube seal.

2.11.3.7.4.2 Pre-requisites to satisfactorily verify the following in order to apply extension up to 3 months at the shafting occasional survey:

review of service records (the ship and/or machinery logs showing in-service conditions, repairs and damages of the shafting and propeller);

review of the previous sterntube bearing clearance recordings;

written confirmation from the chief engineer that the shafting components are in good working condition.

2.11.3.8 Survey intervals.

2.11.3.8.1 For cone keyless connections, the maximum interval between two consecutive propeller removals and verification of the shaft cone by means of NDT using the RS-approved method (refer to 2.11.3.6.4) shall not exceed 15 years.

For cone keyed connections, the propeller shall be removed and the shaft cone shall be subject to NDT by means of the RS-approved method (refer to 2.11.3.6.4) at each survey according to Method 4.

2.11.3.8.2 Shaftings of the following configurations shall be surveyed according to Method 4 at intervals not exceeding 5 years:

single shaft operating exclusively in fresh water (refer to Note 1);

single shaft provided with corrosion prevention system (refer to Note 2);
single corrosion resistant shaft;
all kinds of multiple shafts arrangements.

N o t e s : 1. Names and boundaries of specified fresh waters shall be recorded as restrictions on the area of navigation in the Classification Certificate and, as an additional information, in the classification section "Memoranda for Shipowners and Surveyors" of the List of Survey's Status (refer also to 2.5.5.2.1).

2. Corrosion prevention system of propeller shaft is for example:

.1 continuous metallic, corrosion resistant liners;

.2 separate working journals of metallic, corrosion resistant material with the following types of coating between them: continuous cladding, multiple layer synthetic coating, multiple layer of fiberglass, rubber/elastomer covering coating;

.3 combinations of above mentioned.

2.11.3.8.3 Shaftings not belonging in one of the configurations listed in 2.11.3.8.2 shall be surveyed according to Method 4 at intervals not exceeding 3 years.

2.11.3.8.4 Survey extensions.

For all types of propeller connections, the interval between two consecutive shafting surveys may be extended based on occasional survey results, and extensions can be granted in accordance with 2.11.3.7, taking into account the provisions of 2.11.3.4 and the following:

extension up to 1 year (12 months): no more than one extension up to a maximum of 1 year can be granted between surveys according to Method 4. No further extension, of other type, can be granted;

extension up to 3 months: no more than one extension up to a maximum of 3 months can be granted between surveys according to Method 4. In the event an additional extension is requested, the occasional survey shall be carried out to apply extension up to 1 year. The next due survey date is extended up to a maximum of 1 year from the original due date of shafting survey.

2.11.4 Survey of thrust and intermediate shafts.

2.11.4.1 Thrust and intermediate shafts, where provided, are subject to visual examination during periodical shafting surveys.

2.11.5 Survey of other shafting components.

2.11.5.1 Irrespective of shafting survey method, condition of supporting devices shall be verified by means of visual examination.

2.11.5.2 Irrespective of shafting survey method, condition and operability of a brake, a stopping or a shaft turning gear (if any) shall be verified.

2.11.5.3 Irrespective of shafting survey method, for oil lubricated shafts, the RS surveyor shall, in addition to the scope of survey specified in 2.11.2.6 — 2.11.2.8, verify condition of lubrication supply system, namely: condition of oil level indicator;

actuation of low level alarm.

2.11.5.4 Irrespective of shafting survey method, for closed loop system fresh water lubricated shaft, the RS surveyor shall, in addition to the scope of survey specified in 2.11.2.6 — 2.11.2.8, verify condition of water supply system, namely:

condition of water flow indicator;

actuation of alarm for the minimum flow of water;

condition of shut-off valve controlling the supply of water to sterntube bearings.

2.11.5.5 Irrespective of shafting survey method, for open loop system seawater lubricated shaft, the RS surveyor shall, in addition to the scope of survey specified in 2.11.3.5, verify condition of water supply system, namely:

condition of water flow indicator;

actuation of alarm for the minimum flow of water;
condition of shut-off valve controlling the supply of water to sterntube bearings;
condition of seawater cleaning device (if any).

2.11.5.6 When examining the thrust and carrier bearings, condition of white metal of the inserts and thrust pads shall be checked. Condition of races, balls, rollers and separators of the rolling bearings shall be verified. Bearing foundation chocks shall be examined and foundation bolts tightening shall be verified.

2.11.6 Shafting alignment and operational testing.

2.11.6.1 Shafting alignment shall be carried out by the RS-approved method (generally, by the bearing loads or axis breaks and floats) or according to the manufacturer's instructions, after each survey according to Method 1 or Method 4, each dismantling of bearings and/or foundation chocks, as well as during significant repair to replace hull members in way of shafting.

2.11.6.2 Shafting alignment shall be performed with the ship out of dry dock unless the in-dock alignment is recommended by the manufacturer.

2.11.6.3 Evaluation of shafting alignment results shall be made using data contained in the manufacturer's instructions or shafting technical documentation on repair and subject to prior agreement with the Register.

2.11.6.4 Operational testing of shafting and propeller shall be carried out simultaneously with operational testing of the main engines. The RS surveyor shall verify:
presence/absence of leakages through sealings;
temperature of the sterntube, carrier and thrust bearings;
cooling liquid temperature;
vibration level.

2.11.6.5 For CPP, satisfactory operation of pitch control unit and pitch control system shall be verified (from all control stations).

2.11.7 Assessment of technical condition of shaftings and propellers.

2.11.7.1 The technical condition of the propeller and shafting shall be assessed to determine their compliance with the requirements of the Rules for Construction; such an assessment shall be carried out by the RS surveyor based on the survey results and taking into account:
results of the previous shafting and/or propeller survey;
information on in-service wear, damages, failures, repairs and replacements indicated in the ship's documents (maintenance records, ship protocols, machinery logs, etc.).

2.11.7.2 Shafting vibration shall be assessed, if necessary, according to the vibration standards specified in Section 18 of the Guidelines on Technical Supervision of Ships under Construction.

2.11.7.3 Permissible wear limits for machinery, units and components shall be determined using data contained in the manufacturer's instructions and data cards and in the normative documents developed by design offices and R&D organizations and approved by the Register.

2.11.7.4 The maximum permissible operating clearance Δ between the propeller shaft and the sterntube bush or between the propeller shaft and the babbiting of the sterntube bush shall not exceed the following values:
when bearing is manufactured from lignum vitae, rubber, textolite, chipboard or caprolon:

$\Delta = 0{,}012\mathrm{d} + 1{,}8$ mm for shaft diameter 600 mm and less;
$\Delta = 0{,}005\mathrm{d} + 6{,}0$ mm for shaft diameter more than 600 mm;

with babbiting:

$\Delta = 0{,}005\mathrm{d} + 6{,}0$ mm

where d = shaft diameter by the liner, in mm.

2.11.7.5 The minimum operational thickness *t* for the propeller shaft bronze liners in the working areas (in way of sterntube bearings and seals) shall be calculated by the formula

$\mathrm{t} = 0{,}02\mathrm{d} + 5{,}0$ mm

where d = shaft diameter under the liner, in mm.

2.11.7.6 Repairs or replacement of units and components shall be requested if the survey revealed defects exceeding the permissible limits.

Such defects include:

.1 damages:

shaft cracks and bendings;

cracks and corrosion holes in sterntubes and bearing bushes;

damage of lining of sternbush bearings;

excessive nicks, cuts or roughness of the shaft journals, liners and bearings;

cracks on liners and damage of the protective coating;

cracks on the propeller blades and excessive bending of blades;

damage to seal parts of the sterntube arrangement;

.2 excessive wear of shafts, liners, lining of sternbush bearing, propeller blades and propeller boss (including wear due to corrosion and erosion), parts of seal elements oil or water lubricated sterntube bearings;

.3 shafting misalignment, loosening of fit of sterntubes, bushes, liners, couplings and propeller.

2.11.7.7 The shafting and propeller are found as compliant with the Rules for Construction, if the survey revealed no defects or defects detected do not exceed permissible limits specified by the manufacturer. In case where no limits are specified, the requirements of this Chapter shall be met.

2.11.7.8 The shafting and propeller are found as non-compliant with the Rules for Construction if:

the survey revealed wear, damages or failures, which exceed the permissible limits or are deemed by the RS surveyor to be a danger to the ship's operation;

operational testing revealed excessive vibration, hammering in the sterntube, abnormal heating of bearings, failures in lubrication system or pitch control unit.

2.11.7.9 Modifications to the shafting that require torsional vibration calculation include the following:

.1 installation of the main engine of other model or of the same model but with enhanced supercharging or with other firing timing or with other crankshaft construction, or with pistons made of other material;

.2 installation of another flywheel on the engine or turning the existing one, if the new moment of inertia in so doing differs from the previous one by more than 10 %;

.3 installation of an additional flywheel;

.4 installation, removal or replacement of damper or antivibrator by a damper or an antivibrator with other technical characteristics;

.5 installation, removal or replacement of flexible coupling by a coupling with other technical characteristics;

.6 installation, removal or replacement of reduction gear by a reduction gear with other technical characteristics;

.7 installation of CPP (controllable pitch propellers) instead of FPP (fixed pitch propellers) or vice versa;

.8 installation of propeller with other dimensions or of other material or cutting blades of the existing propeller if in so doing the new moment of inertia differs from the previous one by more than 10 %;

.9 changing the torsion stiffness between masses by more than 5 % when the shaft length and (or) shaft diameter are reduced or increased;

.10 replacement of diesel engine, generator, compressor, pump in the diesel-generator, diesel-compressor or diesel-pump set by an engine, generator, compressor or pump of other model.

2.11.8 Survey of AMSS.

2.11.8.1 General.

2.11.8.1.1 AMSS are special propulsion and steering units and any combination of them or with the main propulsion devices, capable of producing thrust or traction force both at a fixed angle to the centreline of the ship and at a variable angle, either under all running conditions (main AMSS) or part thereof including small and zero speed (auxiliary AMSS).

2.11.8.1.2 The requirements of this Chapter apply to main AMSS.

2.11.8.1.3 Survey of auxiliary AMSS includes visual examination of all accessible parts.

2.11.8.1.4 AMSS comprise steerable propellers including retractable units of all types, active rudders, vertical-axis propellers, waterjets, propellers in transverse tunnel (athwartship thrusters), separate nozzle rudders and other devices of similar purpose.

2.11.8.1.5 Main AMSS shall be surveyed in accordance with the AMSS manufacturer's instructions and, in addition thereto or in the absence thereof, with the provisions of this Chapter.

2.11.8.1.6 Main AMSS shall be subject to normal and annual surveys.

Normal surveys of main AMSS shall be carried out, generally during each special survey of a ship for class renewal.

Annual surveys of main AMSS shall be carried out during each annual/intermediate survey of a ship for class confirmation.

Upon agreement with the RS Branch Office which will perform the relevant survey of the ship, or in case of the absence of the request for survey — RS Branch Office which is located in the area of permanent operation of the ship, normal surveys of main AMSS may be carried out during other prescribed periodical surveys of a ship. In this case, annual survey of main AMSS is carried out during periodical survey of a ship.

2.11.8.1.7 Maximum interval between normal surveys of main AMSS shall generally not exceed 5 years. Extension of intervals between normal surveys of main AMSS shall in each case be reviewed by RHO, taking into account the manufacturer's recommendations, and depends on the effectiveness of the main AMSS condition monitoring system used onboard.

2.11.8.2 Survey of steerable propellers.

2.11.8.2.1 Steerable propeller annual survey shall include the following:

review of service records (ship and/or machinery logs showing in-service conditions, repairs and damages of the steerable propeller);

steerable propeller operational testing.

2.11.8.2.2 Steerable propeller special survey shall include, in addition to the scope of annual survey, the following:

steerable propeller manufacturer's instructions;

provisions of Annex 35 to the Guidelines.

2.11.8.3 Survey of vertical-axis propellers.

2.11.8.3.1 Vertical-axis propeller annual survey shall include the following:

review of service records (ship and/or machinery logs showing in-service conditions, repairs and damages of the vertical-axis propeller);

vertical-axis propeller operational testing.

2.11.8.3.2 Vertical-axis propeller shall be submitted for special survey in dismantled condition with measurements being presented, unless expressly provided otherwise in other standards agreed upon with the Register. Vertical-axis propeller special survey shall include, in addition to the scope of annual survey, the following:

vertical-axis propeller manufacturer's instructions;

thorough examination of all the essential parts;

propeller's casing: checking condition of the rigid welded structure consisting of two parts, the lower and upper casings;

hydraulic pressure testing in accordance with the manufacturer's recommendations;

bevel gearing for transmission and reduction of the torque from the horizontal ship shaft to the propeller's rotor: checking condition of the pinion fitted on the drive shaft, bevel pinion rotating in the base plate, bearings, flexible coupling, two carrier-and-thrust bearings;

rotor shaft with central support for transmitting the torque from the propulsion drive shaft to the rotor and for transmitting forces and moment acting on the propeller's rotor and casing through the central support: checking condition of the rotor shaft and the upper and lower cup seals;

propeller rotor with blade sockets: checking condition of the hollow propeller rotor drum (welded of steel plates with sockets for blades) and sacrificial protection;

blade gear mechanism and synchronizing mechanism designed for synchronous rotation of the controlling disk and rotor: checking condition of the controlling disk and the lever mechanism consisting of double-crank arms, tie rods, clevises, pivots, and needle bearings;

control mechanism for controlling disk shifting and retaining in position: checking condition of the control lever, two ball supports, synchronizing mechanism levers, and two servomotors (propulsion and steering ones);

lubrication oil system designed to feed servomotors with oil, to lubricate and cool propeller's rubbing parts, and to overpressure the rotor: checking condition of oil piping, oil pump, and the oil pump chain gear.

2.11.8.4 Survey of waterjets.

2.11.8.4.1 Waterjet annual survey shall include the following:

review of service records (ship and/or machinery logs showing in-service conditions, repairs and damages of the waterjet);

waterjet operational testing.

2.11.8.4.2 Waterjet shall be submitted for special survey in dismantled condition. Special survey shall, in addition to the scope of annual survey scope, include thorough examination with necessary measurements and testing for defects using the RS-approved NDT method, of the following parts, depending on configuration:

impeller with drive;

intake with protection;

straightener;

nozzle rings;

steering and reversing bucket.

2.11.9 Survey of propellers.

2.11.9.1 Fixed pitch propellers (FPP).

2.11.9.1.1 FPP shall be surveyed during each survey of a ship in dry dock.

2.11.9.1.2 In cases where the FPP survey is not credited as a ship special survey, the survey shall be carried out in accordance with 2.5.7.5.

2.11.9.1.3 In cases where the FPP survey is credited as a ship special survey, the survey shall include the following:

if the shafting survey requires the propeller to be removed, propeller boss inner cone shall be subject to visual examination;

the propeller blades made of copper-based alloys shall be subject dye penetrant or fluorescent penetrant testing for crack detection in zone A[1].

the propeller blades made of steel shall be subject to penetrant of magnetic particle testing for crack detection in zone A;

zones B[1] and C[1] shall be subject to visual examination using, in doubt cases, 50×magnifying glass or NDT methods applicable for zone A;

in detachable-blade propellers mating surfaces of bosses and blades shall be examined and, if necessary, their gapping shall be checked;

propeller and blade securing bolts (studs) shall be subject to NDT by an approved method for crack detection. Bolts permanent elongation shall be also checked taking into account the manufacturer's recommendations;

when replacing the propeller, the new propeller cone shall be fit to propeller shaft cone and key (if any);

the new propeller shall be subject to static balancing. Necessity for static balancing of propellers after repair shall be determined by the RS surveyor based on the survey results and information on the shafting operation;

propeller shall be fitted in accordance with the manufacturer's instructions (if any) taking into the account the following:

propeller nut tightening, securing and locking shall be checked;

where the propellers are fitted on the shafts in such a manner as to provide a controllable interference fit (including keyless connection), the interference fit shall be checked for accuracy by marks or by axial pull-up and forces keeping under control the interference fit margin for the mating parts.

2.11.9.2 Controllable pitch propellers (CPP).

2.11.9.2.1 CPP shall be surveyed during each survey of a ship in dry dock.

2.11.9.2.2 In cases where the CPP survey is not covered by 2.11.9.2.3, the survey shall be carried out in accordance with 2.5.7.5.

2.11.9.2.3 The CPP survey in dismantled condition shall be carried out at least once in 5 years (may be combined with special or intermediate surveys). The following shall be performed:

CPP shall be submitted for special survey in dismantled condition with measurements being presented, unless expressly provided otherwise in other standards agreed upon with the Register;

essential parts of propulsion CPP are subject to thorough examination;

starting from the second special survey, feedback rods of the pitch control unit shall be tested for defects using NDT methods;

it is allowed not to dismantle CPP boss during the first special survey. If necessary, bearings of blade parts shall be partially dismantled and examined in the scope sufficient for assessment of the propeller technical condition depending on its configuration;

one of the detachable blades shall be removed to check the mating surfaces of the propeller boss and propeller blade. The securing studs shall be subject to NDT. If defects are detected, all the blades shall be removed and all the securing studs shall be subject to NDT;

the propeller blades made of a copper-based alloy shall be subject to dye penetrant or fluorescent penetrant testing for crack detection in zone A[1];

---

[1] Definitions of zones A, B and C of propellers are given in the internal normative documents on repair intended for the use of RS surveyors.

the propeller blades made of steel shall be subject to penetrant of magnetic particle testing for crack detection in zone A;

zones B^1 and C^1 shall be subject to visual examination using, in doubt cases, 506 magnifying glass or NDT methods applicable for zone A;

during technical supervision of CPP assembly, the RS surveyor shall verify:

quality of installed rubber components (seals). Re-using of rubber components is not permitted. For their replacement, the storage life in accordance with the technical documentation shall be taken into account;

tightening of essential threaded connections with checking the torques or other controlled values (extension, rotation angle, etc.) in accordance with the instructions of the technical documentation;

reliable locking of fasteners. Re-using of locking components (lock washers, wire, etc.) is not permitted;

in cases of repairs of blades or their pitch control gear (straightening, block replacement, etc.) or replacement of blades, pitches of the propeller blades shall be checked to be equal;

in cases of blades repairs or replacement, CPP shall be subject to static balancing;

during CPP assembly, the propeller boss face to propeller shaft flange connection and propeller shaft half-coupling flange to pitch control units shaft flange connection shall be checked for tightness. A 0,05 mm feeler gauge shall enter no more than 5 mm deep;

forces to be applied to tighten (tightening forces) the bolts fastening blades to the boss, and the CPP boss to the propeller shaft flange shall comply with the drawings and manufacturer's instructions. The bolts shall be checked for tightness using a torque wrench or other methods recommended by the manufacturer;

after the CPP assembly, the propeller boss shall be tested by hydraulic pressure in accordance with the manufacturer's recommendations;

CPP blades shall be checked for smooth travel;

blade travel time shall be measured, and propeller tightness during blade travel shall be verified.

2.11.10 Drawing-up the shafting, propeller and main AMSS survey results.

2.11.10.1 The shafting, propeller or main AMSS survey results shall be recorded in the relevant sections of the Survey checklist as per form 6.1.01, and in justified cases, in the Report as per form 6.3.17.

2.11.10.2 An entry on the dates of the propeller shaft and sterntube surveys shall be made in the relevant section of the List of Survey's Status (form 6.3.51-1).

The classification section "Memoranda for Shipowners and Surveyors" of the List of Survey's Status shall indicate the method (Method 1, Method 2 or Method 3) of the last shafting survey. The previous data (if any) on the shafting surveys shall not be deleted.

2.11.10.3 The results of occasional surveys of shaftings and propellers may be drawn up by issuing the Report on Survey of the Ship (form 6.3.10) with making necessary entries in the relevant section of the List of Survey's Status.

2.11.10.4 Based on occasional survey results carried out to apply the survey extensions in accordance with 2.11.2.9 or 2.11.3.7, the RS surveyor shall: draw up the Report on Survey of the Ship (form 6.3.10), make entries in the classification section "Memoranda for Shipowners and Surveyors" of the List of Survey's Status on the shafting survey extension with reference to the confirmation letter from RHO or the RS Branch Office, whichever is applicable.

2.12 ANTICORROSIVE PROTECTION AND COATINGS

The scope and procedure of survey are determined proceeding from the protection method and type in compliance with the applicable provisions of Part II "Survey Schedule and Scope" and Part III "Additional Surveys of Ships Depending on Their Purpose and Hull Material". Maintenance, repair and renewal of anticorrosive protection shall be the shipowner's responsibility. It is recommended to restore anticorrosive protective coatings in poor condition or destroyed completely which were applied according to 1.2.5, Part II "Hull" and 6.5, Part XIII "Materials" of the Rules for Construction (refer also to IACS URs Z8 and Z9), applicable provisions of regulation II-1/3-2 of SOLAS-74/78, as amended (IMO resolutions MSC.215(82) and MSC.216(82)), regulation II-1/3-11 of SOLAS-74/78, as amended (IMO resolutions MSC.288(87) and MSC.291(87)).

Sacrificial protection shall be restored in case of poor condition in accordance with documentation on its application and manufacturer's recommendations (in particular, sacrificial protection is required by 12.3 of Part XVII "Distinguishing Marks and Descriptive Notations in the Class Notation Specifying Structural and Operational Particulars of Ships" of the Rules for Construction).

The main requirements for anticorrosive protection and coatings are given in 1.2.5 and 3.3.5 of Part II "Hull" and 6.5 of Part XIII "Materials" of the Rules for Construction, as well as in Section 3 of Part III "Technical Supervision during Manufacture of Materials" of RTSCS, IACS URs Z8 and Z9, applicable provisions of regulation II-1/3-2 of SOLAS-74, as amended (IMO resolutions MSC.215(82) and MSC.216(82)), regulation II-1/3-11 of SOLAS-74/78, as amended (IMO resolutions MSC.288(87) and MSC.291(87)). Maintenance, repair and renewal of anticorrosive protective coatings applied on structures in accordance with the applicable requirements of the Rules for Construction and international requirements shall be performed in accordance with manufacturer's recommendations, and the applicable requirements of the RS rules (refer to Section 3 of Part III "Technical Supervision during Manufacture of Materials" of RTSCS), as well as 2.12.7 of the Guidelines on Technical Supervision of Ships under Construction. A record on the coating application/renewal shall be made by the RS surveyors in the List of Survey's Status for the ships with protective coatings applied/renewed in accordance with the RS rules and international documents, including a reference to the appropriate requirement of the RS rules and/or international standard (in particular, this also applies to the cases described in Appendix 5.2-1, 5.2.4.2, 5.3.3.2.3, 5.4.2.2.3, 5.9.6, 5.12.3.1.2.1.4, 5.12.3.2, 6.1.1.7, 6.2.2.4.5, 6.2.4.2, 6.3.2.3.11 and etc. of Part III "Technical Supervision during Manufacture of Materials" of RTSCS, as well as 3.3.5 of Part II "Hull" and Section 6 of Appendix 3 to the Rules for Construction).

3 OCCASIONAL SURVEYS

3.1 SURVEYS ASSOCIATED WITH REINSTATEMENT/RETAINMENT OF CLASS

3.1.1 Requirements for surveys associated with reinstatement/retainment of class are given in Section 4, Part II "Carrying Out Classification Surveys of Ships" of the Guidelines.

3.1.2 Procedure for controlling the requirements to be fulfilled is specified in Annex 17 to the Guidelines.

3.2 SURVEYS ASSOCOAIATED WITH CHANGING OF CLASS NOTATION, TYPE/SUBTYPE AND SHIP'S OTHER CHARACTERISTICS

3.2.1 When a shipowner has an intent to change the class notation of the ship, its type/subtype, extend area of navigation within the prescribed area, increase the cargo carrying capacity and the number of persons (including the crew, passengers, special personnel, etc.) on board the ship, as well as make modifications to the ship structure ship structure, machinery, electrical installation, equipment, outfit, arrangements, and other items of supervision covered by the RS Nomenclature, the shipowner shall send a request to RHO (for ships of 100 gross tonnage and less — to the RS Branch Office for in-service supervision or the RS Branch Office which is located in the area of permanent operation of the ship) explaining the reasoning behind the changes requested. These changes shall be substantiated, if necessary by an explanatory note, technical calculations, drawings and schemes verifying compliance with the Register relevant requirements. Examples of set of documents for various types of the most frequent changes are given in Table 3.2.1. The final set of documents shall be defined in each particular case based on the estimated changes, RS ND requirements, as well as applicable provisions of international conventions, codes, etc. (refer to also to Section 6 of Part I "General Provisions"). Matters relating to changing of class notation towards decreasing (for example, area of navigation, ice class, unsinkability category (subdivision), etc.), deletion of distinguishing mark, descriptive notation, etc. shall also be reviewed by RHO (for ships of 100 gross tonnage and less — by the RS Branch Office for in-service supervision or the RS Branch Office which is located in the area of permanent operation of the ship). If necessary, the Register may request the shipowner to submit additional documentation containing substantiation of the decision to be made, action plan, and also as regards the equipment, arrangements relating to the distinguishing mark, descriptive notation to be changed/deleted.

Table 3.2.1

Document	Variants[1]					
	I	II	III	IV	V	VI
Explanatory note	+	+	+	+	–	+
Assessment of ship compliance with the applicable requirements of the Rules for the Classification and Construction of Sea-Going Ships	+ (Parts II and III)	+ (Parts II, III, V, VII, VIII, XVII, as applicable)	+ (Part II)	+ (depending on the ship type proposed)	–	+
Stability calculations	+[2]	–	+[2]	+[2]	–	+[2]
Tonnage calculation or request to RHO to make calculation	–	–	+	+	–	–
Stability Booklet and, where applicable, loading manual, Damage Stability Booklet, loading instrument, stability instrument	+	+ (assessment of the ship's stability in icing)	+	+	+ (including general cargo loading conditions)	+[2]
Assessment of ship compliance with the applicable requirements of the Rules for the Equipment of	+ (Parts II and III)[3]	–	–	+ (Parts II and III)[3]	–	+ (Part II)[3]
Sea-Going Ships						
Analysis of ship compliance with the applicable requirements of the international conventions, codes	–	–	–	+[2]	–	+[2]
Projects involving ship's conversion/modernization	+[2]	+[2]	+[2]	+[2]	–	+[2]

Document	Variants[1]					
Freeboard calculation, load line drawing or request to RHO to make calculation	–	–	+	+[2]	–	+[2]
The shipowner's written confirmation that the ship primarily carries or will carry general cargoes	–	–	–	–	+	–
Cargo Securing Manual	–	–	–	+[2]	+ (if unavailable on board)	–
Analysis of ship compliance with ILO provisions (ILO Convention No.92 and No.133) and MLC	–	–	–	–	–	+[2]
List of measures	–	–	–	+[4]	–	–

[1] Variants:
1 — Extension area of navigation;
2 — Ice class assignment or changing the existing ice class to a higher one;
3 — Increasing carrying capacity;
4 — Changing the ship type (except for the cases of changing the ship type "bulk carrier" to "general cargo ship");
5 — Changing the ship type "bulk carrier" to "general cargo ship" for ships the keels of which were laid or which were at a similar stage of construction before 1 January 2009 (refer to IMO resolution MSC.277(85));
6 — Increasing number of persons on board.
When combining variants, the set of documents for the relevant cases shall be considered.
[2] Where applicable/required.
[3] For ships not covered by SOLAS requirements.
[4] Additional measures that shall be taken by the shipowner for the purpose of changing of the ship type (e.g., amendment of the ship's technical documentation, indication of changes in equipment and outfit depending on the inclusion/exclusion of cargo intended for transportation, confirmation of the ship compliance with the applicable requirements of international conventions, codes and etc.).

3.2.2 Upon results of the request review, Register takes a decision on the possibility of the requested changes in the ship class notation, type/subtype, as well as on extension of area of navigation within the prescribed area, increasing cargo carrying capacity and number of persons on board, based on which conditions for making such changes and scope of occasional survey shall be assigned. In case when the RS Branch Office reviewing the project determines that conversion will be major, and this is confirmed by RHO, the RS Branch Office which has approved this project shall record this information in the conclusion letter and specify to which part/element of the ship this major conversion applies.

3.2.3 The scope of occasional survey depends on the estimated changes in the class notation of the ship and the extent of conversion/modernization of the ship required for it, as well as necessity to implement additional measures, whichever is applicable. In case of making RS-agreed/approved changes in the number and type of equipment and outfit, as regards other data and items of the RS technical supervision, the RS surveyor shall verify compliance with all necessary requirements concerning the changes to be made.

In this case, the RS surveyor shall enter the updated information on the changes made into the relevant RS reporting documents (for example, the Classification Certificate, Equipment Certificate (form 4.1.1), Record of Approved Ship Safety Equipment (form 4.1.2), etc., whichever is applicable).

The RS surveyor carrying out survey of the ship with regard to conversion shall verify information on the nature of conversion specified in the conclusion letter (refer to 3.2.2) and, if the conclusion letter states that conversion is major, he/she shall make an appropriate entry on the date of major conversion concerned in the relevant RS reporting documents (Classification Certificate, statutory certificates issued to the ship, whichever is applicable) and also add this information to the RS electronic databases (with regard to the date of major

conversion, description of major portion according to the definition "Date of build of the ship", etc.) in accordance with the established procedure.

3.2.4 Assignment of a new class notation, type/subtype, extended area of navigation shall be confirmed by RHO based on the results of the occasional survey carried out by the Register and the notice from the RS Branch Office which performed the survey of the ship.

3.2.5 If agreed upon by RHO, when changing the existing ship type "bulk carrier" to "dry cargo ship (general cargo ship)" (refer to Table 3.2.1), in section "Permanent Restrictions" of the Classification Certificate and in the List of Survey's Status the following entry shall be made:

"A ship is primarily designed to carry general cargoes. Bulk cargoes may be only carried occasionally."

Changing the ship type "bulk carrier" to "general cargo ship" for ships the keels of which were laid or which were at a similar stage of construction on or after 1 January 2009 shall not be permitted (refer to IMO resolution MSC.277(85)).

3.2.6 Suspension of distinguishing marks.

The Register may, at its own initiative, delete or alter a distinguishing mark in the class notation, where the survey ascertains that conditions for insertion of the distinguishing mark concerned have been changed or violated.

One of such conditions may be a failure to submit in due dates the items of technical supervision with respect to which a corresponding distinguishing mark is inserted. The matters of distinguishing marks deletion from the class notation shall be considered by RHO. When the above items of technical supervision are not covered by mandatory requirements of the RS rules and/or provisions of the international conventions, do not affect the safety of the ship, personnel on board and the environment, the ship class may not be suspended.

Invalid distinguishing mark may be reinstated upon rectification of the identified deficiencies in the prescribed manner with regard to the provisions of Annex 17 to the Guidelines.

In case where the information on violation of conditions of distinguishing mark was reported after the prescribed periodical survey, the Register, within the shortest possible time agreed with the shipowner, shall carry out an occasional survey of the ship to verify that the detected violations do not affect the safety of ship, personnel or the environment and the alternative measures are provided, where necessary, to maintain the safety of ship, personnel and the environment, to comply with the requirements of the RS rules and provisions of international conventions.

In case where the violations of conditions of distinguishing mark have been revealed during the prescribed periodical survey, this shall be confirmed by the RS surveyor upon completion of the current survey.

In both cases, the RS Branch Office that revealed the violations of conditions of distinguishing mark, shall perform the following:

.1 draw up and send to RHO a request for change of the class notation;

.2 on receipt of the RHO confirmation on the change of the class notation, the appropriate entries shall be made in the ship ПИД (first informational document) and ship's documents where the class notation is indicated, according to the procedure established by RS;

.3 the shipowner shall be advised of deletion of the relevant distinguishing mark from the class notation;

.4 in case of inability of the RS surveyor to attend the ship and re-issue and/or update the ship's documents indicating the ship class notation, the relevant entries shall be made by the RS Branch Office for in-service supervision in the classification section "Memoranda for Shipowners and Surveyors" of the List Survey's Status. These entries shall contain the information on the fact that from the date of receipt of the RHO confirmation, the relevant

distinguishing mark is invalid and that the Classification Certificate shall be replaced on board during the next ship attendance with indication of the new class notation;

.4.1 examples of an entry:

.1 "Distinguishing mark [specify] in the class notation is invalid from [DD.MM.YYYY — specify the date of RHO confirmation of changing the class notation]";

.2 "At the nearest ship attendance, the RS surveyor shall re-issue the Classification Certificate with the expiry date remaining unchanged and deletion of the distinguishing mark [specify] from the class notation".

3.2.7 Assignment/change of ice class.

3.2.7.1 When the RS-classed ship is assigned an ice class for the first time and when the ice class of ships constructed before 1 January 1999 (i.e. having **L4 — L1**, **UL**, **ULA**, **LL1 — LL4** ice classes) is changed to **Ice1 — Ice3**, **Arc4** and higher, as well as when the ice class of ships constructed after 1 January 1999 is upgraded, the following shall be performed:

.1 a shipowner or an organization authorized by the shipowner shall submit to the Register for agreement the documentation containing the results of ship assessment for compliance with the applicable requirements of the Rules for Construction and these Rules concerning the selected ice class (for hull, arrangements, stability and subdivision, machinery installation, systems and piping, propeller-rudder system — depending on the ice class selected by the shipowner);

.2 upon satisfactory documentation review in accordance with 3.2.7.1 and its agreement (the results are stated in the RS conclusion letter), the ship shall be submitted to the Register for survey to verify compliance with the RS requirements for items related to the ice class based on their actual condition (including the results of residual thickness measurements of hull structures) and additional measures applicable based on the results of the documentation agreement;

.3 upon satisfactory survey completion and fulfillment of the specified measures (refer to 3.2.7.1.2), the ship shall be assigned an appropriate ice class with issuance of the Classification Certificate, updating other ship's documents where the ice class is indicated, and notifying the relevant RS Branch Offices/RHO Locations on the change in the ship class notation.

3.2.7.2 When assigning the RS ice class to ships to be accepted to the RS class, the provision of Section 5, Part II "Carrying Out Classification Surveys of Ships" of the Guidelines shall be met.

3.3 SURVEYS OF SHIPS ASSOCIATED WITH EMERGENCY OCCURRENCES

3.3.1 Requirements for surveys of ships associated with emergency occurrences are given in Section 7, Part II "Carrying Out Classification Surveys of Ships" of the Guidelines.

3.4 SURVEYS OF SHIPS ASSOCIATED WITH PASSAGES

3.4.1 The RS requirements for passages of ships are specified in Section 8, Part II "Carrying Out Classification Surveys of Ships" of the Guidelines.

4 OTHER SURVEYS

4.1 GENERAL

4.1.1 Subject to special agreement and authorization, the Register may carry out other surveys, such as:

surveys carried out on authorization of state authorities (MA, embassy of Flag State, standardization bodies, state technical supervisory bodies, etc.);

surveys carried out at the request of companies (shipping, insurance, industrial and others).

Authorizations may be of single type (request, letter) or long-term type (contract, agreement, MA legislative act, etc.) limited or unlimited as to their period of validity.

The above mentioned authorizations, as a rule, are submitted to the Register via RHO for organization and monitoring of their fulfillment by the appropriate Register Representations.

Single urgent authorizations may be locally accepted by the Register Representations, provided RHO is immediately notified to agree the subsequent actions on fulfillment of the authorization.

4.2 SURVEYS CARRIED OUT ON AUTHORIZATION OF STATE AUTHORITIES

4.2.1 Surveys carried out on authorization of state authorities are subdivided as follows:

.1 surveys carried out in compliance with the requirements of international conventions and codes;

.2 surveys carried out in compliance with the national standards and regulations.

4.2.2 Scope of surveys of ships in service carried out in compliance with the provisions of the international conventions shall be determined based on conditions specified in the MA authorization and shall include the requirements of the relevant Register rules (for the ships flying the RF flag), international conventions, agreements, IMO codes and additional MA instructions contained in Section "Additional Requirements of Maritime Administrations" on the RS internal website.

Instructions for carrying out surveys and issuance of documents are given in Part III "Survey of Ships in Compliance with International Conventions, Codes, Resolutions and Rules for the Equipment of Sea-Going Ships" of the Guidelines.

4.2.3 The surveys specified in 4.2.2 shall be carried out by the RS exclusive surveyors.

Exclusive surveyors to ACS — IACS member may be authorized by RHO to carry out such surveys, subject to agreement with MA.

4.2.4 Scope of surveys carried out in compliance with the requirements of the national standards shall be determined based on conditions specified in the authorizations of the appropriate standardization bodies or state technical supervisory bodies.

These authorizations, as a rule, are associated with the export and import deliveries of materials and equipment not covered by the RS Nomenclature.

When authorized to carry out surveys in compliance with the national standards, the surveyors to the Register shall perform the surveys strictly within the frames of the authorization and monitor the fulfillment of requirements of the documents, parameters and properties stipulated in this authorization.

Report on fulfillment of the authorization and payment matters shall be agreed with RHO.

4.3 SURVEYS OF SHIPS RECEIVED TO OR ACCEPTED FROM THE TIME-CHARTER

4.3.1 According to existing practice receiving of a ship to time-charter or acceptance from time-charter shall be carried out in accordance with agreements or contracts between the shipowner and charterer, which require the ship Inspection Report issued after the RS surveyor has inspected the ship.

4.3.2 Survey for issue of the Inspection Report shall be carried out upon the charterer's request receiving a ship to time-charter or accepting it from time-charter.

4.3.3 In order to compile the Report, the surveyor shall carry out external examination of freeboard, superstructures, decks, cargo holds and their plating, cargo handling gear, deck machinery, hold closing devices and other appliances related to cargo operations and affecting safety of transported cargoes.

Cargo handling gear and mechanical arrangements for closing of hatch covers shall be operationally tested.

During survey it is necessary to verify the Tonnage Certificate availability, as well as availability and validity of the following ship's documents: Classification Certificate, Safety Certificate, Load Line Certificate.

4.3.4 Results of survey stating defects shall be recorded in the Report drawn up per form 6.3.10. The Report shall contain the date of the latest docking and amount of fuel, oil and fresh water onboard at the time of the survey; availability and validity of the ship's documents.

The Report may be made in Russian and/or in English depending on the customer's request and submitted to the representatives of the charterer and ship administration.

4.4 SURVEYS ASSOCIATED WITH CONFIRMATION OF DAMAGE CLAIMS

4.4.1 The confirmation of damage claims shall be carried out by the surveyor after survey of claim items on call of a shipowner or master of the ship.

4.4.2 The confirmation of damage claims shall be carried out for all the items covered by the RS Nomenclature.

4.4.3 The surveyor conducting the survey of a claim item shall confirm the damage claims regardless of the defect occurrence causes, signing and witnessing the claims with his stamp, and making the following entry: "Defect confirmed". The surveyor shall also draw up the Report per form 6.3.10, in which he shall list numbers and dates of the damage claims he has confirmed. The copies of damage claims shall be sent for registration and storage to the RS Branch Office for in-service supervision, and the copy of the Report drawn up per form 6.3.10 shall be kept in the RS Branch Office, which performed the survey.

4.4.4 Where the survey reveals significant defects or emergency damages affecting safety of ship navigation, the RS surveyor may demand the elimination of defects prior to ship going to sea or, depending on the circumstances, permit a passage to a repair yard specifying service restrictions. Matters relating to ship passage shall be reviewed by RHO in accordance with 8.2.5, Part II "Carrying Out Classification Surveys of Ships" of the Guidelines.

4.4.5 The RS Branch Offices shall keep a continuous record of defects confirmed by the damage claims relating to the items of the RS technical supervision and review defects on suppliers of ships and items of technical supervision with the necessary generalizations and proposals on elimination and prevention of defects detected. Necessary information on defects shall be sent to the RS Branch Office, carrying out technical supervision during construction of ships or manufacture of materials and products, and to the RS Branch Office, which performed the survey and which, in extremely important cases, shall send the results of the review and generalizations to RHO.

4.4.6 On fractures and cracks of components of turbines, boilers, pipelines, fittings, heat exchangers and pressure vessels, and also of other equipment affecting the navigation safety and posing a danger to persons, the RS Branch Offices shall immediately inform RHO and also send a copy of a damage claim confirmation within 10 days.

4.5 SURVEY OF SHIPS TO BE WRITTEN OFF FROM ACTIVE FLEET

4.5.1 Special features of technical supervision of ships to be written off from active fleet.

In some cases, the shipowner takes a decision to continue operation for a certain period of the ships with significant wear due to age prior to their write-off from the active fleet. The significant expenditures therewith are undesirable for the shipowner for rebuilding the worn-out parts of the ship, in particular, for replacement of structural hull members with a wear exceeding the established standards.

The ship's operation of that kind may be permitted with the restrictions ensuring the maintenance of the ship's safety level needed.

The shipowner shall develop the service restrictions with the specific proposals and their justification and submit these materials to the RS Branch Office for approval.

Depending on the circumstances, the service restrictions may be applied to:

area of navigation;

value and distribution of ship's loading (freeboard increase, special distribution of cargo and ballast, exclusion of heavy and deck cargoes carriage);

navigation with respect to weather conditions (a wind force, sea state) and an operation season;

conditions of ice navigation;

types of cargoes carried;

output of main machinery;

passenger capacity.

A change of the ship's purpose and a change-over of a self-propelled ship to a non-self-propelled one may be also a service restriction.

The combination of the restrictions is permitted.

Besides the service restrictions, the shortened periods between ship's surveys may be specified.

4.5.2 Minimum conditions to ensure the safety of ships to be written off prior to special survey.

4.5.2.1 In survey of ships and assigning them service restrictions, the RS Branch Offices shall proceed from the basic provisions given in this Chapter.

In determination of the necessary extent of the ship repair, the requirements of the current rules resulting in essential structural changes shall not be applied, because to the ships in service, as a rule, the requirements of those rules are applied, according to which the ship was built.

4.5.2.2 The application of service restrictions due to an inferior technical condition may be permitted on the request of the shipowner for the limited period (less than 5 years), provided that he submits an adequate justification of the proposed restrictions.

Service restrictions and (if necessary) reduction of intervals between surveys are subject to the Register approval.

4.5.2.3 The shipowner shall submit to the RS Branch Office the information on the ship's technical condition and on the assessment of all the ship's parts in accordance with the current normative and instructive documents of the shipowner regulating the procedure for determination of technical condition and further use of the ships with significant wear or major damages. The extent of repair works and standards on spare parts carried on board shall be agreed by the RS Branch Office based on conditions of ensuring the navigation safety for the specified service period till the ship's write-off with regard to the shipowner's proposals on the extent of repair works and service restrictions.

4.5.2.4 In order to determine and assess the ship technical condition, the shipowner shall conduct testing for defects of all the ship parts. On determination of the ship technical condition the data may be used of the previous periodical surveys and the information on

in-service wear, damages and failures, repairs and replacements indicated in the ship's documentation (maintenance records, ship protocols, machinery logs, etc.).

4.5.2.4.1 Assessment of the hull technical condition.

Testing for defects shall be performed in accordance with the requirements of Section 5 of Part I "General Provisions" and Annex 2 to these Rules.

As a compulsory measure, the underwater part of the hull, steering gear, shafting and propellers, fittings of bottom and side openings shall be submitted.

In case of restricted area of navigation, the permissible residual thicknesses of hull members may be specified in relation to the as-built thicknesses required by the rules, according to which the ship has been built for this area of navigation. In some cases, wear of hull members above standards may be permitted with additional restrictions on weather conditions and/or the ship's loading. However, the justifications of maintaining the equivalent strength with assumed restrictions shall be submitted.

4.5.2.4.2 Assessment of technical condition of machinery installation, fire-fighting systems and outfit.

The assessment and evaluation of technical condition of the ship machinery installation by the RS Branch Office shall be based on the materials submitted by the shipowner in accordance with the requirements of 4.5.2.3. The extent of testing for defects of the separate units and components of main engines, auxiliary machinery, shafting, appliances, fire-fighting systems and outfit shall be determined in each case on the results of the testing for defects and the survey.

The final decision shall be taken after testing in accordance with the requirements of the surveyors to the Register. It is not permitted therewith the operation of the following machinery and equipment with wears exceeding the permissible values:

propulsion system (main engine, power transmission system, propeller);

machinery ensuring the ship's maneuverability;

ballast and bilge systems including pumps;

anchor arrangement;

fire-fighting systems;

emergency power sources.

In addition, the operation is not permitted with wears exceeding the ultimate values for such items, which emergency failure threatens the safety of attending personnel, namely:

boilers and pressure vessels;

pipelines of compressed and liquefied gases;

steam and hot liquids ($t > 100$ °C) pipelines;

internal combustion engines, air compressors, centrifugal fuel and oil separators;

arrangements having storage tanks with flame combustion.

Along with that, where the ship system or complex includes a reserve facility ensuring its proper functioning, if the system part fails, the requirements imposed for the technical condition of the system components with wears exceeding the permissible values may be less stringent in cases, when with a decrease of operational parameters within the limits ensuring the ship's adequate operation safety, the loading on these machinery and equipment is reduced down to the safe values. On the Register requirement, it shall be confirmed by calculations.

N o t e . The permissible values of machinery component wears shall be assessed according to the manufacturer's instructions or operation rules, and also in compliance with the Guidelines.

4.5.2.4.3 Assessment of technical condition of electrical, radio and navigational equipment.

The extent of repair and the replacement of separate elements of the electrical, radio and navigational equipment in each case shall be assessed according to the results of the

testing for defects and the survey. If wear exceeding values allowed by these Rules is found, the possible permit for the operation of this equipment for a specified period with necessary restrictions shall be reviewed by the Register.

The final decision shall be taken following measurements and tests.

4.5.2.5 The specified service restrictions shall be reflected in the class notation in verbal and additional characteristics, and in the ship's documents in accordance with the provisions established.

4.5.3 On passages of ships to be scrapped — refer to 8.2.11, Part II "Carrying Out Classification Surveys of Ships" of the Guidelines.

4.5.4 The class reinstatement procedure for ships with suspended class and to be written off from the active fleet is specified in 4.7.12, Part II "Carrying Out Classification Surveys of Ships" of the Guidelines.

4.6 SURVEY OF SHIPS ASSOCIATED WITH CHANGE OF SHIPOWNER, PORT OF REGISTRY AND SHIP'S NAME

4.6.1 General.

4.6.1.1 These requirements apply to activities of the RS surveyors at survey of the RS-classed ships associated with change of shipowner, port of registry, ship's name. Whenever the shipowner requests to survey the ship and issue the relevant documents in connection with change of shipowner or port of registry, review of the request shall be carried out and appropriate activities shall be performed.

For the provisions concerning the RS actions for ship registration under the flag of the Russian Federation or the flag of another state, refer to 4.2.2, Part III "Survey of Ships in Compliance with International Conventions, Codes, Resolutions and Rules for the Equipment of Sea-Going Ships" of the Guidelines.

4.6.1.2 With change of recorded data (e.g. port of registry, shipowner or ship's name), the ship's documents previously available on board, in lieu of which the new documents are issued (if applicable), shall cease to be valid and shall be marked with the inscription "INVALID" signed, stamped and dated by the RS surveyor with due reference to the RS report containing reasoning for such a decision.

4.6.2 Change of the shipowner/port of registry/ship's name.

4.6.2.1 In case of changing the shipowner/port of registry/ship's name, relevant documents shall be verified and during this procedure the original or the notarized copy of the documents issued by the flag Administration body of state registration with specification of the new shipowner/new port of registry/new ship's name (as applicable) (for example, Certificate of Ship's Registry or Certificate of Ownership, Certificate of the Right to Sail under the State Flag of the Russian Federation, Minimum Safe Manning Document, Continuous Synopsis Record), Ship Station License issued by the flag Administration or the flag State authorized organization, confirmation of registration of the ship security alert system (SSAS) in the Monitoring and Security Alert Centre, shall be submitted to the RS surveyor.

The ship administration shall also submit to the RS surveyor the confirmation form concerning the fact that the International COSPAS-SARSAT Coordinating Centre has been informed about change of the shipowner and/or port of registry, and/or ship's name (whatever is applicable).

Make sure that the GMDSS shore-based maintenance agreement (if applicable) has been concluded with the new shipowner.

4.6.2.2 In case of changing the shipowner, occasional survey of a ship shall be carried out by external examination to confirm that all necessary equipment and outfit are fitted in their regular places and no changes have been made.

For ship with dual class, the agreement on a dual class becomes invalid after change of shipowner. In this connection, it is necessary to request a new shipowner whether he intends to continue the ship operation in a dual class or to retain the ship only in the RS class. In case of further ship operation in a dual class, it is required to sign an agreement on a dual class for five years. In case of intention to retain only the RS class, it is required to send to the RHO official notification about this in English. Based on this notification, the class of the second classification society will be withdrawn.

4.6.2.3 In case of changing the port of registry, survey of the ship shall be carried out with the purpose of verifying whether a new port of registry is marked on the ship hull stern and life-saving appliances, as well as whether the ship's new call sign (signal letters) assigned to it by the new MA is included in the static data of the Automatic Identification System (AIS), if the change of port of registry is associated with the flag change.

4.6.2.4 In case of changing the ship's name, survey of the ship shall be carried out with the purpose of verifying whether the new name of ship is marked on the ship's hull and

life-saving appliances, as well as whether the ship's new name assigned to it by Flag State MA, is included in the AIS static data.

4.6.2.5 Upon results of the review of the submitted documents and performed survey (refer to 4.6.2.1 — 4.6.2.4) the documents to be issued by the Register and containing modified data (classification, statutory certificates, statements, documents of compliance, supplements and list/records to the certificates (as applicable) as well as ship's documents to be issued by RS in compliance with the national legislation of the flag state of the ship) shall be re-issued.

The survey results shall be recorded in the Report on Survey of the Ship (form 6.3.10) containing list of works performed, new shipowner and its details/new port of registry/new ship's name (as applicable), and issued documents. The Report shall be drawn up both in Russian and in English languages for ships flying the RF flag, and only in English for ships flying any other flags. For ships not engaged on international voyages and flying the RF flag, the Report shall be issued in Russian only. Survey results may be drawn up using the program STORM and by issuing Ship Survey Statement (form 6.1.03). Issuance of a separate Report on Survey of the Ship (form 6.3.10) is not required in this case.

N o t e . All the certificates, statements, documents of compliance, supplements and lists/records to the certificates, containing modified data, shall be re-issued. If the re-issuance is not possible, it is permitted to make limited amendments (not exceeding two) to the said ship's documents manually prior to the nearest periodical survey when these amended documents shall be re-issued. Copies of the corrected manually documents (pages with corrections) shall be forwarded to be included in the ship's file. The relevant section "Memoranda for Shipowners and Surveyors" of the List of Survey's Status shall contain an entry on the necessity to re-issue the manually corrected documents during the forthcoming periodical survey indicating exactly what documents shall be re-issued. Corrections shall be duly signed and stamped by the RS surveyor. The exceptions are the documents not listed above and not attached to any certificates, statements, documents of compliance (for example, Record of Approved Ship Safety Equipment, Record of Conditions of Assignment of Load Lines, etc.) which may be kept with the corrections made.

4.6.3 Submission of documents after the ship survey.

4.6.3.1 After survey of the ship by the RS Branch Office for in-service supervision, copies of all the documents issued shall be submitted to this Branch Office to be included in the ship's file.

4.6.3.2 After survey of the ship associated with change of name and/or shipowner, the RS Branch Office, which performed the survey shall submit electronic copies of all documents that have been issued to the RS Branch Office for in-service supervision. After survey of the ship associated with change of port of registry and/or flag, electronic copies of all documents that have been issued shall be submitted to the RS Branch Office for in-service supervision within area of activity of a new port of registry. After changing the port of registry and/or flag of the ship, the RS Branch Office for in-service supervision within area of activity of the former port of registry shall submit the ship's file to the RS Branch Office for in-service supervision within area of activity of a new port of registry. Copies of documents and the ship's file shall be submitted to RHO, ifthe ship is flying the flag of any state where no RS Branch Office is available.

4.6.3.3 The RS Branch Office, which performed the survey, shall forward operative information on the survey performed to the RS Branch Office for in-service supervision.

4.6.3.4 Copies of issued documents and ship's files as well as operative information on the survey performed shall be forwarded in accordance with the procedure established by the RS internal procedures.

4.7 ASSESSMENT OF TECHNICAL CONDITION OF SHIPS WITHOUT RS CLASS

4.7.1 Requests for assessment of technical condition of ships without RS class are performed by the RS Branch Offices upon the RHO authorization according the appropriate RS internal procedures.

4.8 ADDITIONAL MEASURES AIMED AT MAINTENANCE AND IMPROVEMENT OF THE TECHNICAL CONDITION OF SHIPS

4.8.1 General.

4.8.1.1 Additional measures aimed at changing the ship surveys periodicity and scope shall be taken to ships, which technical condition is not maintained by the shipowner in continued compliance with the applicable requirements of the RS rules and international conventions. The additional measures shall be as follows:

.1 fleet monitoring system;

.2 special surveillance regime.

4.8.2 Fleet monitoring system.

4.8.2.1 General.

4.8.2.1.1 Fleet monitoring system is implemented by the Register through occasional surveys of ships in the scope of class annual survey to verify their compliance with the applicable requirements in the intervals between the prescribed periodical surveys.

4.8.2.1.2 Effective period of fleet monitoring system shall be not less than 24 months. There shall be a minimum of two occasional surveys during this period carried out in accordance with 4.8.3.

4.8.2.2 Conditions and procedure for fleet monitoring system implementation for a ship.

4.8.2.2.1 The fleet monitoring system may be implemented for a ship, in case of detention by Port State Control (PSC) or Flag State Control (FSC) with identified deficiencies relating to the items of the RS technical supervision.

4.8.2.2.2 The fleet monitoring system may be implemented for a ship if:

.1 based on results of the RS initiative survey or PSC/FSC inspection, the deficiencies have been found the number and nature of which indicate that the ship maintenance is carried out improperly or untimely;

.2 the requirements established by the Register are systematically violated (detainable deficiencies identified during occasional and/or periodical surveys; overdue outstanding RS conditions of class (classification requirements); untimely submission of items of technical supervision resulting in the ship's class suspension/affecting validity of statutory certificates; withdrawal of statutory certificates, etc.);

.3 the ship has unsatisfactory appearance (for example, absence or significant degradation of paint coating of the above-water part of the hull, decks, superstructures and deckhouses, presence of doublers), apparent defects of life-saving appliances, fire-fighting equipment, loss of contrast of the load line marking, etc.;

.4 unsatisfactory shipowner's attitude towards safety of navigation has been established based on review of statistics of nonconformities/deficiencies identified, causes of their occurrence and measures for their elimination;

.5 there is evidence of non-payment of wages to the crew or its systematic delay, as this fact directly affects the timely and effective execution by the crew of their duties to ensure the safe operation of the ship.

4.8.2.2.3 The expediency of fleet monitoring system implementation for a ship according to 4.8.2.2.2 shall be determined by the RS Branch Office for in-service supervision or the RS Branch Office performing the survey, taking into account the following ship's data, but not limited to:

age and type of the ship;

class status history;

number and nature of the conditions of class (classification requirements) since the previous special survey;

results of ship's inspection by PSC/FSC for the previous 36 months;

identified structures with substantial corrosion, doublers;

inclusion of the ship's flag in the "black list" in one of the port state control regimes, etc.

Substantiated positive opinion of the RS Branch Office for in-service supervision or the RS Branch Office performing the survey, on fleet monitoring system implementation for a ship shall be submitted to RHO.

4.8.2.3 Documents implementing fleet monitoring system.

4.8.2.3.1 Decision on the fleet monitoring system implementation for a ship shall be taken by RHO and brought to the notice of the RS Branch Office for in-service supervision.

4.8.2.3.2 The RS Branch Office for in-service supervision makes an entry on the condition of class (classification requirement) into the classification section of the List of Survey's Status: "Due to implementation of the fleet monitoring system for a ship, an occasional survey in the scope of annual one shall be carried out in accordance with 4.8.3.1, Part II "Survey Schedule and Scope" of the Rules for the Classification Surveys of Ships in Service. After survey completion, new date of the condition of class (requirement) shall be assigned.". The due date is calculated as the anniversary date plus 6 months.

4.8.2.3.3 The shipowner shall be notified in writing by the RS Branch Office for in-service supervision about implementation of the fleet monitoring system for a ship, the imposed requirement (recommendation) and the due date of fulfillment thereof, that the occasional survey may be commenced not earlier than 1 month before the due date, as well as the conditions and procedure for ship keeping out of the fleet monitoring system.

4.8.2.3.4 The forthcoming occasional survey may be carried out concurrently with annual/ intermediate/renewal survey of a ship (for example, in case of the ship submission for annual/periodical surveys before the due date involving a change in the anniversary date). Upon completion of the survey, a new condition of class (classification requirement) shall be imposed in accordance with 4.8.2.3.2.

If during the period when the ship is under the fleet monitoring system, the anniversary date of the ship submissions to surveys is changed (as prescribed by these Rules), the due date of the occasional survey shall be assigned in accordance with the 4.8.2.3.2 taking into account the new anniversary date.

4.8.2.3.5 At survey of a ship carried out for change of a shipowner, the RS Branch Office performing the survey shall notify a new shipowner in writing that the ship is under the fleet monitoring system as well as of the conditions of the ship keeping out of the system.

4.8.3 Procedure for survey of a ship covered by fleet monitoring system.

4.8.3.1 An occasional survey of a ship shall be performed in the scope of 2.2, this Part of the Rules and Section 2, Part III "Survey of Ships in Compliance with International Conventions, Codes, Resolutions and Rules for the Equipment of Sea-Going Ships" of the Guidelines (with regard to the statutory certificates issued to the ship)

4.8.3.2 While generating the Survey checklist (form 6.1.01) for performing an occasional survey, which is not carried out concurrently with the prescribed periodical/confirming surveys, the scope "annual" shall be selected.

4.8.3.3 Upon completion of the survey, the RS surveyor shall issue and specify a new condition of class (classification requirement) in the Ship Survey Statement (form 6.1.03) and in the classification section of the List of Survey's Status in accordance with 4.8.2.3.2.

4.8.3.4 If survey of the ship reveals that the item of technical supervision is not in compliance with the applicable requirements of the RS rules and/or international conventions, the RS surveyor shall issue an appropriate condition (requirement) which shall be fulfilled prior to completion of the current survey. In the absence of the possibility of the requirement execution at the port of survey, the RS surveyor shall be guided by the provisions of 4.2.3, Part III "Survey of Ships in Compliance with International Conventions, Codes, Resolutions and Rules for the Equipment of Sea-Going Ships" of the Guidelines.

4.8.4 Conditions and procedure for the ship keeping out of the fleet monitoring system.

4.8.4.1 The matters relating to ship keeping out of the fleet monitoring system shall be reviewed by RHO upon the shipowner's written request and in case of simultaneous compliance with the following conditions:

.1 there shall be a minimum of two occasional surveys carried out in accordance with 4.8.3 for a continuous period of 24 months under normal operating conditions (the ship class has not been suspended, the ship has not been laid-up);

.2 there shall be no PSC/FSC detentions of the ship covered by the fleet monitoring system;

.3 if applicable, there shall be no reports as per form 6.3.65 on deficiencies possibly affecting the implementation of the ISM Code on board (according to IACS PR No. 17);

.4 if applicable, reports as per form 8.1.9 on safety management system (SMS) audit of the ship (if the SMS audit was carried out when the ship was under the fleet monitoring system) shall not contain clear evidence of improper maintenance or failure to comply with the SMS procedures by the crew/company.

4.8.4.2 RHO shall notify in writing the shipowner and RS Branch Office for in-service supervision of the decision taken. In case of a positive decision on the ship keeping out of the fleet monitoring system, the RS Branch Office for in-service supervision shall delete the condition of class (classification requirement) from the List of Survey's Status.

4.8.4.3 In case of suspension/withdrawal of class, lay-up of the ship covered by the fleet monitoring system, the requirements of 4.8.3 shall not apply until the reinstatement/reassignment of class, ship reactivation after lay-up, accordingly.

4.8.4.4 Following review by port authorities (PSC/FSC) of the decision on detention of the ship, the condition of class (classification requirement) on ship submission to occasional survey in accordance with 4.8.2.3.2 may be cancelled upon the RHO decision.

4.8.4.5 The matter relating to ship keeping out of the fleet monitoring system before the prescribed date can be reviewed by RHO after change of shipowner. In this case, by the time of requesting to RHO at least one occasional survey in accordance with 4.8.3 shall be carried out at the request of the new shipowner, and its results shall demonstrate the improvement of the ship technical condition. In such a case, the condition of ship keeping out of the fleet monitoring system specified in 4.8.4.1.1 may be waived.

4.8.5 Special surveillance regime.

4.8.5.1 General.

4.8.5.1.1 In case of PSC/FSC detention of the ship covered by the fleet monitoring system, the Technical Committee (TC) shall take a decision on the ship to be subjected to special surveillance regime (SSR) on the recommendation of the Expertise and Analysis Centre (EAC) or the RS Branch Office for in-service supervision.

4.8.5.1.2 When the ship was subjected to SSR, the periodicity and procedure for occasional surveys prescribed in 4.8.3 remain valid for the ship.

4.8.5.1.3 RHO shall notify the shipowner in writing of the application of the SSR to a ship and of the applicable requirements of these Rules. A copy of this notification shall be addressed to the RS Branch Office for in-service supervision.

4.8.5.1.4 An entry on ship under SSR shall be made in the List of Survey's Status.

4.8.5.1.5 If the ship is subjected to SSR during ship's periodical survey, the requirements of 4.8.5.2 shall not apply to the ship until the survey is credited as completed.

4.8.5.1.6 Class of the ship under SSR may be withdrawn with no suspension.

4.8.5.1.7 In case of withdrawal of class, lay-up or conservation of the ship under SSR, the requirements of 4.8.5.2 shall not apply until the reassignment of class, ship reactivation after lay-up or conservation, accordingly.

4.8.5.2 Additional SSR requirements.

4.8.5.2.1 The scope of periodical surveys of the ship under SSR shall be extended considering the following:

.1 if the prescribed survey is annual, then intermediate classification surveys for all parts of the ship (depending on the ship's age) shall be carried out simultaneously with an in-water survey using underwater television (except where dry dock survey is prescribed for the ship, as well as during survey of ships over 15 years of age). For ships over 15 years of age the thickness measurements and close-up survey of hull structures shall be carried out in the scope, as a minimum, of the previous special survey in compliance with the requirements of Part III "Additional Surveys of Ships Depending on their Purpose and Hull Material" and/or in accordance with Table 2.4.2.6.2-1 of Part II "Survey Schedule and Scope", whichever is applicable, and additionally, of structures/items on the upper deck and superstructures (machinery seatings and equipment foundations, superstructure and deckhouse bulkheads/walls, air pipes and ventilator pipes, closures for openings in the outer contour of superstructures and deckhouses and other structures as deemed necessary by the RS surveyor). In addition to 4.11.3.3 of Part I "General Provisions" and 1.3.2.3 of Part III "Additional Surveys of Ships Depending on their Purpose and Hull Material", for ships over 15 years of age the items subject to thickness measurements and close-up surveys shall be cleaned to bare metal. For ships of 15 years of age and less the thickness measurements of hull structures shall be taken at least of suspect areas identified by the RS surveyor, or of the areas of substantial corrosion recorded in the List of Survey's Status or revealed for the first time.

In case of doubt, based on survey results, concerning the technical condition of the ship or its particular items, the RS surveyor shall require the extent of measurements of wear parameters and other defects to be increased. The survey of the **ESP** ships shall be carried out according to the programme approved by the Register for the previous special/intermediate survey considering the provisions of 1.3.1.1, Part III "Additional Surveys of Ships Depending on their Purpose and Hull Material", with thickness measurements to be performed as stated above, without testing tanks and hatch covers for tightness unless otherwise specified by the RS surveyor for the assessment of watertight and weathertight integrity of structures. When the bottom survey is carried out while the ship is afloat (in-water survey), for thickness measurements and close-up survey of the structures the safe access shall be provided thereto, safety measures shall be developed by the shipowner and submitted to the RS Branch Office for approval. If measures submitted are not agreed by the Register, the ship shall be submitted for survey in dry dock;

.2 if the prescribed survey is intermediate, then special classification survey shall be carried out in full scope for all parts of the ship (depending on the ship's age) in compliance with the requirements of these Rules, and shall mandatorily include the survey of the outside of the ship's bottom in dry dock. The extent of thickness measurements shall be the same as for the previous special survey. Survey of ESP ships shall be carried out according to the programme approved by the Register for the previous special survey considering the provisions of 1.3.1.1, Part III "Additional Surveys of Ships Depending on their Purpose and Hull Material", to be performed with thickness measurements and without testing tanks and hatch covers for tightness unless otherwise specified by the RS surveyor for the assessment of watertight and weathertight integrity of structures.

N o t e . After completion of intermediate survey performed in the scope of a special one, the existing Classification Certificate is not renewed but shall be endorsed.

In addition to 4.11.3.3 of Part I "General Provisions" and 1.3.2.3 of Part III "Additional Surveys of Ships Depending on their Purpose and Hull Material", in ships over15 years of

age the items subject to thickness measurements and close-up surveys shall be cleaned to bare metal.

4.8.5.2.2 For all types of surveys of ships under SSR, the provisions of 2.2.2.3, Part II "Carrying Out Classification Surveys of Ships" of the Guidelines shall also apply.

4.8.5.2.3 If survey reveals defect affecting technical condition of an item of the RS technical supervision, the appropriate condition of class (requirement) shall be imposed by the RS surveyor, that will ensure not only elimination of the defect itself but also the significant improvement of technical condition of the ship hull, machinery, equipment, arrangements, systems (e.g. unit replacement of mechanism, device (arrangement) or system). The imposed requirement (condition of class) shall be dealt with prior to survey completion.

N o t e . If the condition of class (requirement) imposed to the ship cannot be completed at the port where the survey is carried out, the possibility and conditions of the ship passage to the port where this requirement can be dealt with, shall be reviewed by RHO.

4.8.5.2.4 For ships under SSR, the following is prohibited:

.1 extension of special survey;

.2 extension of survey of the outside of the ship's bottom, survey of stern tube arrangement and propeller shaft;

.3 extension of surveys carried out on CSS basis;

.4 postponement of completion of conditions of class (requirements) imposed previously by the Register;

.5 retainment of class of the ship being under the survey after the expiry date of that survey, i.e. application of code 16 "CLASS VALID, THE SHIP IS UNDER SURVEY".

4.8.5.2.5 Payments for the services related to surveys of ships under SSR shall only be carried out on 100 % prepayment basis.

4.8.5.2.6 In case of change of the shipowner and/or flag of the ship, the RS Branch Office performing the survey shall notify the new shipowner and/or MA in writing of the special surveillance regime imposed on the ship and of the relevant requirements of these Rules, a copy of the notification shall be addressed to the RS Branch Office for in service supervision.

4.8.5.3 SSR cancellation.

4.8.5.3.1 SSR maybe cancelled by the TC decision. The decision is made by RHO in case of receipt of a written request from the shipowner and, generally, simultaneous compliance with the following conditions:

.1 at least three periodical surveys of the ship are carried out in compliance with the requirements of 4.8.5.2.1;

.2 ship class was not suspended in the last 18 months for the reasons listed in 4.2.1 — 4.2.6, 4.3 and 4.7, Part II "Carrying Out Classification Surveys of Ships" of the Guidelines;

.3 no PSC/MA detentions of the ship in the last 18 months for the reasons associated with deficiencies relating to technical condition of the item of the RS technical supervision.

N o t e . The SSR duration may be reduced by the TC decision in case of significant improvement of the ship technical condition after change of the shipowner. In such a case, the requirements of 4.8.5.3.1.2 and 4.8.5.3.1.3 may be waived.

4.8.5.3.2 RHO shall notify the shipowner and the RS Branch Office for in-service supervision in writing of the SSR cancellation.

4.8.5.3.3 If TC makes a decision to retain special surveillance regime for the ship, RHO shall notify the shipowner in writing on conditions of further possible SSR cancellation for the ship.

4.9 SURVEYS ASSOCIATED WITH REPAIR, CONVERSION AND MODERNIZATION OF SHIPS

4.9.1 The Register carries out technical supervision during all types of repair, conversion and modernization of the ship's hull, equipment and devices, machinery installation and refrigerating plant, electrical equipment and radio equipment subject to mandatory RS supervision in accordance with the RS Nomenclature for confirmation or renewal of class, as well as for confirmation of compliance with the applicable requirements of international conventions/codes.

The RS activity on technical supervision during conversion, modernization and repair of ships is based on the General Regulations for the Classification and Other Activity of the Register. All services on technical supervision are provided by the Register on the basis of requests and contracts with organizations, firms and individuals involved in conversion, modernization and repair of ships.

4.9.2 During technical supervision of ships under repair, conversion and modernization, relevant requirements of these Rules, the Guidelines, the Guidelines on Technical Supervision of Ships under Construction, RTSCS and the internal normative documents on repair intended for the use of RS surveyors shall be met.

During conversion of cargo ships covered by the provisions of SOLAS 74 as amended, constructed before 1 February 1992, regardless of their length, and constructed before 1 July 1998 of 100 m in length and less, the estimation of changes in the subdivision index performed in accordance with 1.1.5, Part V "Subdivision" of the Rules for the Classification and Construction of Sea-Going Ships shall be submitted.

During modernization, repair or conversion of ships, MODU, FOP and of fshore installations, in particular, during replacement of insulation in fire structures and repair/replacement of equipment, regardless of the SOLAS-74 applicability to the ship and irrespective of the date of construction, provisions of IMO circulars MSC.1/Circ.1374, MSC.1/Circ.1379 and MSC.1/Circ.1426, Annex 48 to the Guidelines and IACS recommendation No. 130, prohibiting installation of the materials and products containing asbestos on board ship (refer to 1.8.21, Part III "Survey of Ships in Compliance with International Conventions, Codes, Resolutions and Rules for the Equipment of Sea-Going Ships" of the Guidelines) and to perform repair and maintenance using such materials or products, shall be met. The shipowner shall be responsible for ensuring that these provisions are met.

For ships, MODU, FOP and offshore installations constructed or converted before 1 January 2011 (according to IACS UI SC249, with keel laid, or at a similar stage of construction or conversion before 1 January 2012), where materials or products containing asbestos are still found, provisions of IMO circular MSC.1/Circ.1374 (in particular, para 4), as well as the applicable national requirements of the Flag State MA shall be met.

N o t e . From 1 October 2008, for all new ships and offshore installations, which design documentation was reviewed for compliance with the Rules for Construction in force after 30 September 2008, the use of asbestos was only permitted by the Rules for Construction:

for vanes used in rotary vane compressors and rotary vane vacuum pumps;

in watertight joints and linings used for the circulation of fluids when, at high temperature in excess of 350 °C or pressure in excess of 7 MPa, there is a risk of fire, corrosion or toxicity; and

in supple and flexible thermal insulation assemblies used for temperatures above 1000 °C.

From 1 January 2011, the Rules for Construction prohibit the use of asbestos anywhere, including in the above products. The use of asbestos containing materials in structures, materials and products, machinery installations, machinery or equipment covered by the requirements of Part VI "Fire Protection", Part II "Machinery Installations", Part VIII "Systems and Piping", Part IX "Machinery", Part X "Boilers, Heat Exchangers and Pressure Vessels" and Part XII "Refrigerating Plants" shall be prohibited.

For ships covered by the SOLAS-74 as amended requirements, the following shall be met:

materials and products for ships built before 1 July 2002 may contain asbestos, but in this case provisions of IMO circular MSC./Circ.1045 "Guidelines for Maintenance and Monitoring of On Board Materials Containing Asbestos" shall be met.

For ships built on or after 1 July 2002 but before 1 January 2011:

new regulation II-1/3-5 is has been introduced into SOLAS-74 as amended, prohibiting installation of materials or products containing asbestos on board all ships, except for the following items:

for vanes used in rotary vane compressors and rotary vane vacuum pumps;

in watertight joints and linings used for the circulation of fluids when, at high temperature in excess of 350 °C or pressure in excess of 7 MPa, there is a risk of fire, corrosion or toxicity; and

in supple and flexible thermal insulation assemblies used for temperatures above 1000 °C.

For ships built on or after 1 January 2011, in accordance with the amendments introduced into SOLAS-74 by IMO resolution MSC282(86), installation of materials or products containing asbestos is prohibited beginning from 1 January 2011.

Detailed information on application of the above regulation is given in IMO circulars MSC.1/Circ.1379 "Unified Interpretation of SOLAS Regulation II-1/3-5" (concerning asbestos in stores), MSC.1/Circ.1426 "Unified Interpretation of SOLAS Regulation II-1/3-5" (concerning likely components, evidence and documentation),MSC.1/Circ.1374 "Information on Prohibiting the Use of Asbestos on board ships" (includes how to manage asbestos found on ships not in compliance with SOLAS-74), IACS UI SC249 (Annex 48 to the Guidelines), IACS Recommendation No. 130.

For ships and offshore installations to be accepted into the RS class and not covered by the requirements of SOLAS-74, as amended, the above provisions shall be applied from the date of ship acceptance to the RS class.

Where the RS surveyor reveals that structures, new spare parts, materials and products containing asbestos were installed on the RS-classed ships, MODU, FOP or offshore installations during the period from 1 October 2008 (including after entry into force of IMO circulars MSC.1/Circ.1379 and MSC.1/Circ.1426), RHO shall be informed in each particular case for making a final decision on that case (the following information shall be provided to RHO: documentation on installation/replacement/repair of such materials, equipment and products, agreed upon with RS, date of replacement/repair/installation, the appropriate RS report confirming the RS technical supervision performed. Where necessary, other additional information shall be provided upon the RHO request).

4.9.3 Repair of items of the RS technical supervision is carried out to restore them to the technical condition complying with the RS requirements.

4.9.4 Matters relating to the equivalent alteration (replacement), when it is impossible or inappropriate to use required repair method and extent of technical supervision prescribed by RS, are reviewed by RHO on the basis of proposals submitted by the RS Branch Office.

4.9.5 Repairs, conversions and modernizations shall be carried out in accordance with technical documentation approved by RS. Technical documentation on repair shall contain certain requirements for schedule of repair quality control by ship repair yard (organization) engaged in repair of items of the RS technical supervision.

4.9.6 Standards applied for elaboration of technical documentation on repair, conversion, modernization of items of the RS technical supervision, procedures, calculations norms (strength, stability, etc.), methods of testing, inspections and quality control are reviewed by the Register in accordance with the RS normative documents. The Register verifies compliance with the standards only with respect to the technical requirements relating to its competence.

4.9.7 In case of any differences related to the requirements of the RS surveyor carrying out technical supervision of repair, conversion, modernization, the ship repair yard or the shipowner may address to the RS Branch Office carrying out technical supervision of works performed for settlement of the differences. In case of disagreements with

the RS Branch Office, the claims may be sent to RHO with technical background and copies of the RS Branch Office decision.

4.9.8 Register carries out technical supervision provided that the ship repair yards and persons proper discharge their duties on carrying out repair works, conversion or modernization. No claims are accepted by the Register for delays caused by increase of scope of survey of items of technical supervision due to quality insufficiency of work performed, unstable technological processes, low technological discipline and lack of effectiveness of the quality system at the ship repair yard.

4.9.9 The RS surveyor responsibilities during technical supervision of repair, conversion, modernization consist of verification of works (compliance of structures, components and parts, etc. with the approved technical documentation, accuracy of applied technology, correctness of relevant material application, extent of quality control of work performed by the ship repair yard).

4.9.10 Repair of the ship's hull, machinery or equipment, which may affect the validity of the classification and/or statutory certificates, shall be approved by the Register. If prompt repair is required (riding repair, temporary repair) provisions of Section 3 Part II "Carrying Out Classification Surveys of Ships" of the Guidelines shall be met.

4.9.11 The ship repair yard and the shipowner shall immediately notify the RS surveyor about all cases of detection of fractures, deformations, fire and flooding, which cause to damage of hull structures, machinery, equipment and systems during repair, conversion or modernization. In this case, the RS surveyor shall impose the requirements for elimination of defects and their causes, agree the scope and methods of repair and carry out technical supervise during elimination of defects detected or occurred.

4.9.12 Instructions on drawing-up the RS reports upon repair are given in Section 3, Part II "Carrying Out Classification Surveys of Ships" of the Guidelines.

4.10 LAY-UP AND REACTIVATION SURVEYS

4.10.1 General.

4.10.1.1 Provisions of this Chapter shall apply to all ships and floating facilities (hereinafter referred to as "the ships") in service with valid or suspended RS class, whose shipowner submitted a written request for the ships lay-up under the RS technical supervision.

4.10.1.2 The Register does not review matters relating to lay-up of ships without RS class, including ships with withdrawn RS class.

4.10.1.3 A ship shall be laid up with keeping items of the RS technical supervision which may affect the safety of the ship, personnel and the environment, in an operational mode and carrying out maintenance prescribed by manufacturers. The operational mode is understood as keeping the items ready for operation for the sake of their fast reactivation. The necessity to keep other ship items in operational mode shall be within the competence of the shipowner.

4.10.1.4 Reviewing matters relating to ship lay-up conditions in accordance with these provisions, shall be within the competence of the RS Branch Office in which area of activity the lay-up survey is scheduled.

4.10.1.5 Reviewing matters relating to ship reactivation conditions after lay-up in accordance with these provisions, shall be within the competence of the RS Branch Office in which area of activity the reactivation survey after lay-up is scheduled.

4.10.2 Class of laid-up ships. Lay-up and reactivation surveys.

4.10.2.1 When a ship is laid up with valid class, the ship's class status shall be changed to code 13 "CLASS VALID, THE SHIP IS LAID UP" since the date of issuing the Statement of Laid-up Ship (form 3.1.13).

4.10.2.2 When a ship is laid up with suspended class (irrespective of suspension reasoning), the ship's class status shall be changed to code 25 "CLASS SUSPENDED, THE SHIP IS LAID UP WITH SUSPENDED CLASS" since the date of issuing the Statement of Laid-up Ship (form 3.1.13).

Notwithstanding the provisions of 4.5.1, Part II "Carrying Out Classification Surveys of Ships" of the Guidelines, the class of laid-up ship may not be withdrawn after a six-month period and remain suspended provided the provisions of this Chapter are met.

4.10.2.3 When a ship is laid up, the Classification Certificate and other certificates issued by the Register and valid before its lay-up, become invalid.

4.10.2.4 Execution of the RS unfulfilled requirements may be postponed till the end of the lay-up period, except for the requirements which, at the Register discretion, pose a direct danger to the safety of the ship, personnel and the environment.

4.10.2.5 Class of the laid-up ship may be retained provided the conditions defined by these provisions are met.

4.10.2.6 If the terms and conditions of ship lay-up are violated (the ship has not been submitted to the prescribed periodical or occasional surveys by the due dates, the lay-up site has been changed but not agreed with the Register) the ship class shall be suspended. The ship's class status shall be changed to code 24 "CLASS SUSPENDED IN LAY-UP (OVERDUE SURVEY)".

Where terms and conditions of accounts receivable invoices issued before and after lay-up are violated, the ship class shall be suspended. The ship's class status shall be changed to code 27 "CLASS SUSPENDED (NON-SAFETY RELATED REASONS)".

4.10.2.7 Class of the laid-up ship may be reinstated in accordance with 4.6, Part II "Carrying Out Classification Surveys of Ships" of the Guidelines.

4.10.2.8 If class of the laid-up ship is not reinstated within 6 months after suspension, or the ship is not reactivated after lay-up, the class of the laid-up ship shall be withdrawn in

accordance with 4.5, Part II "Carrying Out Classification Surveys of Ships" of the Guidelines. Class of the laid-up ship may not be reassigned.

4.10.2.9 Ifthe shipowner decides to lay up a group of ships concentrated in one area, every ship in the group shall be surveyed separately. However, common safety measures during lay-up may be developed for the whole group and the common crew may be assigned.

4.10.2.10 The shipowner shall provide the ship with qualified personnel, whose number shall be agreed with port authorities where the ship will be laid up. The personnel shall be able to maintain satisfactory technical condition of the ship for the sake of ship safety, security and possibility to submit the ship for periodical surveys by the Register.

4.10.2.11 The crew shall be provided with reliable means of all time communication with port authorities, shoreside fire-fighting and rescue services.

4.10.2.12 If the ship is laid-up at anchorage, electric power supply shall be additionally provided for lighting, operation of fire-fighting equipment and systems, bilge systems, continuous operation of fire detection and fire alarm systems, fire warning alarms and general emergency alarm system, navigation lights etc.

4.10.2.13 During lay-up, items of the RS technical supervision may be repaired only under the RS technical supervision on agreement with port authorities where the ship is laid up.

4.10.2.14 During lay-up, the shipowner may submit separate items of the RS technical supervision to be credited for periodical surveys not related to lay-up.

4.10.2.15 When a ship is intended for a passage from laid-up position (for example, to repair yard or dry dock), consideration may be given provided the provisions of Section 8, Part II "Carrying Out Classification Surveys of Ships" of the Guidelines are met.

4.10.2.16 The laid-up ship shall be subjected to the following surveys:

lay-up survey is carried out prior to lay-up according to 4.10.3;

periodical survey is carried out at intervals not exceeding 12 months starting from the date of lay-up according to 4.10.4;

survey of the outside of the ship's bottom (bottom survey) is carried out according to 4.10.5;

occasional survey is carried out, if deemed necessary, in case of changes in the established lay-up conditions, after an emergency occurrence with the laid-up ship, after a change of the ship recorded data, or in other justified cases upon the RS decision (refer to 4.10.6);

reactivation survey is carried out prior to ship reactivation according to 4.10.9.

4.10.3 Lay-up survey.

4.10.3.1 Lay-up survey is carried out at the request of the shipowner and is intended for determining the possibility of class retainment (including suspended class) during lay-up period taking into account implemented measures.

4.10.3.2 Lay-up survey shall be carried out in the scope specified in 4.10.7.

4.10.3.3 Upon satisfactory results of the lay-up survey for the ship with valid class, the ship's class status shall be changed to code 13 "CLASS VALID, THE SHIP IS LAID UP" and the Statement of Laid-up Ship shall be issued (refer to 4.10.8) with validity not exceeding 12 months starting from the survey completion date.

4.10.3.4 Upon satisfactory results of the lay-up survey for the ship with suspended class, the ship's class status shall be changed to code 25 "CLASS SUSPENDED, THE SHIP IS LAID UP WITH SUSPENDED CLASS" and the Statement of Laid-up Ship shall be issued (refer to 4.10.8) with validity not exceeding 12 months starting from the survey completion date.

4.10.3.5 Prior to lay-up, the shipowner shall develop and document Measures for Safe Lay-Up (hereinafter referred to as "the Measures"), which shall include but not be limited to:

lay-up location of the ship (group of ships), i.e. name of port, country, exact geographic coordinates (if needed);

ships lay-up arrangement plan (for a group of ships);
regulations on ship lay-up;
minimum number of qualified personnel
completeness of life-saving appliances;
components fire detection and fire alarm systems and fire-fighting equipment and systems;
components of bilge systems;
components of other arrangements, systems, machinery and equipment that shall provide safety of ship, personnel and the environment during lay-up.

The Measures shall include, if applicable, measures ensuring radiation safety enforcement for nuclear ships and nuclear support vessels.

The Measures shall be agreed upon with the owner/terminal administration and its technical services.

4.10.4 Periodical survey.

4.10.4.1 Periodical survey is carried out at the shipowner's request and is intended for establishing the ship's compliance to a sufficient degree withthe conditions of class (including suspended class) taking into account implemented measures.

4.10.4.2 Periodical survey of laid-up ship is carried out in the scope specified in 4.10.7.

4.10.4.3 Upon satisfactory results of periodical survey, the class of laid-up ship shall be retained, and a new Statement of Laid-up Ship shall be issued for the ship (refer to 3.1.13) with validity not exceeding 12 months starting from the survey completion date.

4.10.4.4 Under special/exceptional circumstances, an extension not exceeding three (3) months to allow completion of the periodical survey of the laid-up ship may be granted. Possibility and conditions of such extension shall reviewed by RHO.

4.10.4.5 In case of any doubts, the RS surveyor may require additional thickness measurements.

4.10.5 Survey of the outside of the ship's bottom (bottom survey).

4.10.5.1 Bottom surveys of the laid-up ship shall be carried out in accordance with 2.5.5.1, i.e. at intervals not exceeding 10 years, if results of periodical surveys do not require reduction of intervals between the bottom surveys.

Bottom surveys shall be carried out (if possible) simultaneously with periodical surveys of the laid-up ship.

4.10.5.2 The next period of bottom survey of the laid-up ship shall start from the date of last bottom survey.

4.10.5.3 Such surveys may be carried out as in-water surveys in accordance with 2.5.8.

4.10.6 Occasional survey.

4.10.6.1 The shipowner shall notify the RS Branch Office for in-service supervision or the RS Branch Office in which area of activity the ship is laid up of all the changes in the established lay-up conditions, emergency occurrences with the laid-up ship, changes in the ship recorded data, changes in the lay-up location or of any other similar cases.

4.10.6.2 The RS Branch Office in which area of activity the ship is laid up shall, at the shipowner's request, carry out an occasional survey to determine conditions of class for the laid-up ship.

4.10.7 Scope of lay-up survey.

4.10.7.1 Verification of documentation on board the ship shall cover the following documents:

valid documents confirming the ownership and the right to fly the flag issued by Flag State MA;

agreed Measures specified in 4.10.3.5;

valid contractual documents between the owner and administration of the terminal where the ship shall be laid up, including acceptance-transfer report.

4.10.7.2 Survey of the ship hull shall consist of:

.1 examination of the following elements for the purpose of ensuring that their structural integrity and, if applicable, tightness remain effective:

hull structures, superstructures, deckhouses, machinery and boiler casings;

coamings of cargo and companion hatches, companionways, ventilators and air pipes;

hatch covers of freeboard decks and superstructures including cargo hatch covers;

funnel casings;

skylights, flush deck, side and non-opening scuttles, companion ladders;

closures of openings in the outer contour;

deck and bulkhead penetrations in watertight structures;

scuppers and other drainage holes;

gangways and underdeck passages;

guard rails and bulwarks;

shell, bow, side and stern doors of ro-ro ships;

devices to ensure the watertightness of hatch covers and other closures of openings in the outer counter, with operational testing;

structures of main and auxiliary machinery spaces, refrigerating machinery spaces and boiler spaces, coal bunkers, shaft tunnels;

.2 internal examination of all cargo holds, ballast tanks and dry and void spaces for damage and leakage. Ballast tanks which, for stability of the laid-up ship, contain some ballast, shall be examined according to the schedule with their consecutive drainage for provision of adequate stability of the ship. When considered necessary by the surveyor, or where extensive corrosion exists, thicknesses measurements shall be carried out. If the results of these thickness measurements indicate that substantial corrosion is found, then the extent of thickness measurements shall be increased to determine areas of substantial corrosion. When assigning additional thickness measurements, the applicable provisions of these Rules depending on the type and age of the ship shall be met. These extended thickness measurements shall be carried out before the survey is credited as completed;

.3 verification of load line marking;

.4 thicknesses measurements of hull structures in areas of substantial corrosion identified at previous surveys;

.5 verification of implementation of safety measures during lay-up as specified in 4.10.3.5.

4.10.7.3 Survey of arrangements, equipment and outfit shall consist of:

operational testing of machinery of anchor, mooring and towing arrangements, if the Measures specified in 4.10.3.5 stipulate their usage for the safety of a laid-up ship;

verification of implementation of safety measures during lay-up as specified in 4.10.3.5.

4.10.7.4 Survey of life-saving appliances shall consist of:

verification of completeness, scheduled maintenance, location, stowage and readiness for the intended use of survival craft and personal life-saving appliances, which availability is stipulated by the Measures specified in 4.10.3.5;

verification of implementation of safety measures during lay-up as specified in 4.10.3.5.

4.10.7.5 Survey of fire detection and fire alarm systems and means for fire-fighting shall consist of:

verification of fire integrity of structural members (bulkheads, decks and closures of openings therein);

verification of means and devices for closing the of the engine room;

operational testing of ship's fire detection and fire alarm systems as well as fire warning alarms;

verification that fire extinguishing systems are readily available for use to provide safety of ship during lay-up as stipulated by the Measures specified in 4.10.3.5, that fire

extinguishing medium is also available, as well as verification of fire-fighting equipment proper location and readiness for use;

verification of implementation of safety measures during lay-up as specified in 4.10.3.5.

4.10.7.6 Survey of machinery installation and electrical equipment shall consist of:

operational testing for intended use of main electrical power source with systems serving it, if its availability is stipulated by the Measures specified in 4.10.3.5 (for example, when lay-up at anchorage is planned);

operational testing for intended use of emergency source of electrical power with systems serving it;

operational testing for intended use of switchboard and switchgear (emergency, navigation lights, monitoring, control and alarm switchboards and panels);

operational testing of main and emergency lighting of items and spaces, essential for safe lay-up and survivability of the ship, as well as for habitability and evacuation of people;

measurement and recording of insulation resistance of cabling and electrical equipment to be used (or being used) during lay-up;

operational testing of internal service communication;

verification of implementation of safety measures during lay-up as specified in 4.10.3.5.

4.10.7.7 Survey of radio equipment shall consist of:

operational testing for intended use of radio commutation facilities, which use is stipulated by the Measures specified in 4.10.3.5, including confirmation of their operational testing performed by organizations recognized by the Register or ACS — IACS member (taking into account Section 7, Part I "General provisions").

4.10.8 Drawing up (Issuance) of documents.

4.10.8.1 The results of the initial, periodical, occasional surveys shall be recorded in the Report on Survey of the Ship per form 6.3.10. The results of the bottom survey of the laid-up ship shall be recorded in the Survey checklist per form 6.1.01 and the Ship Survey Statement per form 6.1.03.

4.10.8.2 The RS reporting documents shall contain the detailed results of survey prescribed by the applicable provisions of this Chapter, and the conclusion on possible issuance of the Statement of Laid-up Ship and on the class status.

4.10.8.3 Upon satisfactory results of lay-up survey, the Statement of Laid-up Ship shall be issued with validity not exceeding 12 months starting from the date of lay-up.

Upon satisfactory results of periodical survey of the laid-up ship, the Statement of Laid-up Ship shall be issued with validity not exceeding 12 months starting from the actual date of periodical survey completion.

4.10.8.4 Intervals between bottom surveys of the laid-up ship shall be assigned in accordance with 4.10.5.

4.10.8.5 Based on results of lay-up survey, the List of Survey's Status shall contain information on the termination of the Classification Certificate and other certificates valid before the ship being laid up, by entering the abbreviation "SUSP" in line "Class status", and the Statement of Laid-up Ship shall be added. Additional information on the ship lay-up with recording the lay-up date and lay-up site, shall be entered in the classification section "Memoranda for Shipowners and Surveyors" of the List of Survey's Status as well.

4.10.9 Reactivation survey.

4.10.9.1 Ships which have been laid up and are returning to active service shall be subjected to the initial survey. The scope of initial survey for ship reactivation after lay-up, as well as the dates of the next periodical surveys, shall be determined by the RS Branch Office in which area of activity the reactivation survey after lay-up is scheduled.

In cases where the ship has been laid up with suspended class, at ship reactivation the class shall be reinstated according to the provisions of Section 4, Part II "Carrying Out Classification Surveys of Ships" of the Guidelines.

4.10.9.2 When assigning the scope of initial survey, the length of the lay-up period and the dates of periodical surveys prescribed for the ship before being laid up shall be considered (refer also to 2.4.1.4.8).

4.10.9.3 If at the moment of initial survey, the date of ship submission for any periodical survey assigned to it before the lay-up is due or overdue, the initial survey shall be carried out in the scope of such periodical survey (refer also to 2.4.1.4.8).

4.10.9.4 If at the moment of initial survey, the date of ship submission for the prescribed surveys assigned to it before the lay-up is not due, the initial survey shall be carried out in the scope of annual survey meeting all the requirements (if any), which are already due.

4.10.9.5 If at the moment of initial survey, only the date of the bottom survey and/or the shafting survey is overdue, the initial survey shall be carried out in the scope of annual survey concurrently with the bottom survey and/or shafting survey.

4.10.9.6 Upon satisfactory results of the initial survey for ship reactivation, a new Classification Certificate similar to the certificate which was valid before the lay-up shall be issued to the ship.

4.10.9.7 At ship reactivation after lay-up, the dates of the periodical surveys prescribed to the ship before being laid up shall be revived or new dates shall be assigned depending on the scope of the performed initial survey. If the initial survey for ship reactivation is carried out in the scope of special survey, the next period of class shall be established in accordance with 2.4.1.4.

4.10.9.8 All the information entered in the List of Survey's Status at ship lay-up according to 4.10.8.5 shall be removed.

4.10.9.9 The ship's class status shall be changed to code 11 "CLASS VALID, THE SHIP IS IN SERVICE".

4.11 CONSERVATION AND REACTIVATION SURVEYS

4.11.1 General.

4.11.1.1 This Chapter specifies the procedure for the RS technical supervision during ship conservation and reactivation after conservation.

4.11.1.2 At ship conservation, the RS class shall be suspended.

4.11.1.3 The Register does notreview the matters relating to conservation of ships without RS class, including ships with withdrawn RS class.

4.11.1.4 Notwithstanding the provisions of 4.5.1, Part II "Carrying Out Classification Surveys of Ships" of the Guidelines, the class of a ship in conservation may not be withdrawn after a six-month period and may remain suspended for a period of maximum 12 months from the date of ship conservation. Upon expiry of 12 months, if the condition of 4.11.1.5 is not met, the ship class shall be withdrawn automatically, and the class status shall be changed to code 33 "CLASS WITHDRAWN (NONCOMPLIANCE WITH THE REQUIREMENTS OF THE RS RULES)".

Reassignment of class, which the ship had before the conservation, may be considered by the Register in accordance with Section 4, Part II "Carrying Out Classification Surveys of Ships" of the Guidelines.

4.11.1.5 The possibility to extend the period of ship conservation over 12 months up to a maximum of 3 months shall reviewed by RHO.

4.11.1.6 Presence and composition of the watchkeeping personnel on board the ship in conservation shall be determined by the shipowner.

4.11.1.7 The shipowner shall be responsible for ensuring ship survivability, safety of the watchkeeping personnel and the environment.

4.11.1.8 When a ship is intended for a passage from conservation position (for example, to repair yard or dry dock), consideration may be given provided the provisions of Section 8, Part II "Carrying Out Classification Surveys of Ships" of the Guidelines are met.

4.11.2 Conservation survey.

4.11.2.1 Prior to survey, the shipowner shall develop the Ship Conservation Plan (hereinafter referred to as "the Plan") taking into account the good seamanship and the manufacturers' recommendations on the ship equipment conservation, and submit it to the Register for approval.

4.11.2.2 Prior to submitting this Plan to the Register for approval, it shall be agreed with the port authorities where the ship will be in conservation.

4.11.2.3 At the shipowner's request, the Register shall carry out conservation survey where the following shall be verified:

availability of the contract and acceptance-transfer report between the shipowner and the organization — conservation site;

implementation of the conservation measures in accordance with the Plan.

4.11.2.4 The results of the ship survey shall be recorded in the Report on Survey of the Ship (form 6.3.10).

4.11.2.5 Upon satisfactory results of the survey, the Register draws up and issues the Statement of Ship's Conservation (form 3.1.14) with validity not exceeding 12 months from the date of conservation survey completion. The ship's class status shall be changed to code 23 "CLASS WITHDRAWN, THE SHIP IS IN CONSERVATION" irrespective of the fact whether the ship class was valid or suspended at the moment of conservation.

4.11.2.6 Based on results of the conservation survey, the List of Survey's Status shall contain the information on the termination of Classification Certificate and other Certificates valid before the ship's conservation, by entering the abbreviation "SUSP" in line "Class Status", and the Statement of Ship's Conservation shall be added. Additional information on the ship conservation with recording the conservation date and conservation site, shall be

entered in the classification section "Memoranda for Shipowners and Surveyors" of the List of Survey's Status as well.

4.11.3 Reactivation survey.

4.11.3.1 Ships which have been in conservation and are returning to active service shall be subjected to initial survey for reinstatement of class.

4.11.3.2 To determine the scope of survey for class reinstatement, the provisions of Section 4, Part II "Carrying Out Classification Surveys of Ships" of the Guidelines shall be met.

4.11.3.3 When assigning the scope of initial survey, the length of conservation period, ship's age and dates of periodical surveys prescribed for the ship before the conservation shall be considered (refer also to 2.4.1.4.8).

4.11.3.4 If at the moment of initial survey, the term of ship submission to any periodical survey assigned thereto before the conservation is due or overdue, the initial survey shall be carried out in the scope of such periodical survey (refer also to 2.4.1.4.8).

4.11.3.5 If at the moment of initial survey, the term of ship submission for the prescribed surveys assigned to it before conservation is not due, the initial survey shall be carried out in the scope of annual survey provided all due requirements (if any) are fulfilled.

4.11.3.6 If at the moment of initial survey, only the bottom survey and/or shafting survey is/are overdue, the initial survey shall be carried out in the scope of annual survey concurrently with the bottom survey and/or shafting survey.

4.11.3.7 At ship reactivation after conservation, the dates of the periodical surveys prescribed to the ship before the conservation shall be revived or new dates shall be assigned depending on the scope of the performed initial survey. If the initial survey for ship reactivation is carried out in the scope of special survey, the next period of class shall be established in accordance with 2.4.1.4.

PART III. ADDITIONAL SURVEYS OF SHIPS DEPENDING ON THEIR PURPOSE AND HULL MATERIAL

1 GENERAL

1.1 DEFINITIONS

1.1.1 In addition to the definitions given in Part I "General Provisions", for the purpose of this Part, the following definitions have been adopted.

Ro-ro cargo spaces are spaces not normally subdivided in any way and normally extending to either a substantial length or the entire length of the ship, spaces in which motor vehicles with fuel in their tanks for their own propulsion, and/or goods packaged (in tare or in bulk, on rail or road cars, vehicles (including road or rail tanks), trailers, containers, pallets, demountable tanks or similar enlarged units, or other tanks) are normally loaded and unloaded in a horizontal direction.

Securing device is a device used to keep the door closed by preventing it from rotating about its hinges.

Grooving corrosion — definition is given in Annex 2 to these Rules.

Pitting corrosion — definition is given in Annex 2 to these Rules.

Edge corrosion — definition is given in Annex 2 to these Rules.

A roll-on/roll-of ship is a ship specially designed for transportation of various wheeled vehicles (cars, rolling stocks, tracked vehicles, trailers with and without cargo), in which the cargo loading operations are performed preferably in a horizontal direction — by a roll-on/roll-off.

Supporting device is a device used to transmit external or internal loads from the door to a securing device and from the securing device to the ship's structure, or a device other than a securing device, such as a hinge, stopper or other fixed device, that transmits loads from the door to the ship's structure.

Close-up survey:

as regards survey of the hull structure is a survey where the details of structural components are within the close visual inspection range of the surveyor, i.e. normally within reach of hand;

as regards survey of the ship's machinery, arrangements and systems is a survey with access, opening-up or dismantling provided, where necessary.

Enhanced surveys are surveys according to the enhanced survey programme, which are applicable to **ESP** ships.

A roll-on/roll-of passenger ship (ro-ro passenger ship) is a passenger ship with enclosed or open cargo spaces which is loaded/unloaded in the horizontal direction, or with special category spaces. Classed among passenger ro-ro ships are also ferries, i.e. ships loaded/unloaded in the horizontal direction which regularly carry passengers and which carry vehicles with fuel in their tanks and/or railway carriages on open and/or enclosed decks at ferry crossings.

Special category spaces are enclosed spaces located above or below the bulkhead deck into and out of which motor vehicles can be driven under their own propulsion and to which passengers have access. Special category spaces may be located on more than one deck if total overall clear height for the motor vehicles does not exceed 10 m.

Transverse section includes all longitudinal members such as plating, longitudinals and girders at the deck, sides, bottom, inner bottom, lon gitudinal bulkheads and inner sides (including the plating and longitudinals of hopper and horizontal plates of top side and hopper side tanks). For transversely-framed ships, a transverse section includes adjacent frames and their end connections in way of transverse sections.

Locking device is a device that locks a securing device in the closed position.

ESP ships are oil tankers including double skin oil tankers, chemical tankers, bulk carriers, including double skin bulk carriers, which are subject to Enhanced Survey Programme in compliance with 1.3.1.

General dry cargo ship is a ship primarily designed for carrying break-bulk and packaged cargoes, i.e. the packed or unpacked ones, accepted for carrying in ships according to the number of cargo pieces.

Bulk carrier is a ship, which is constructed generally with single deck, inner bottom, top side tanks and hopper side tanks in cargo spaces, and is primarily designed for carrying dry cargo in bulk. Referred to this type of ships are combination carriers (additional requirements for single skin combination carriers are given in Section 2). The IACS Common Structural Rules do not apply to ore and combination carriers.

Double skin bulk carrier is a ship, which is constructed generally with single deck, inner bottom, top side tanks and hopper side tanks in cargo spaces, has all the cargo holds, regardless of their width, bounded by double sides and is primarily designed for carrying dry cargo in bulk. Referred to this type of ships are ore carriers and combination carriers (additional requirements for combination carriers with longitudinal bulkheads are given in Section 2 or 3). The IACS Common Structural Rules do not apply to ore and combination carriers.

Oil tanker is a ship primarily designed for carrying oil in bulk, referred to this type of ships are also combination carriers (oil/ore carriers, etc.).

Double skin oil tanker is a ship primarily designed for carrying oil in bulk in cargo tanks protected over the entire length of a cargo area with the double skin, which comprises double sides and double bottom spaces used for water ballast or as void spaces.

Note. The definition also applies to existing double skin oil tankers, which do not meet the requirements of regulation 13F, Annex I to MARPOL 73/78, but have U-shaped midship section.

Chemical tanker is a ship constructed or adapted and used for carrying in bulk dangerous chemicals listed in Chapter 17 of the International Code for the Construction and Equipment of Ships Carrying Dangerous Chemicals In Bulk (IBC Code).

Ballast tank (for **ESP** ships only) is a tank that is being used solely for water ballast. The space of a bulk carrier or double skin bulk carrier used for both cargo and ballast shall be treated as a ballast tank when substantial corrosion has been found in that tank. The double skin tank of the double skin bulk carrier is considered as a separate tank, even though it is connected with a top side or hopper side tank.

Combined cargo/ballast tank is a tank, which is used for cargo or water ballast in the course of the general service of a ship and considered as a ballast tank. The cargo tanks wherein the water ballast may be taken in exceptional cases according to regulation 18(3), Annex I to MARPOL 73/78 are considered as cargo tanks.

1.2 REPAIRS

1.2.1 Provisions on repairs are given in Section 5, Part I "General Provisions" of these Rules.

1.3 PREPARATIONS FOR SURVEY[1]

1.3.1 Survey programme of **ESP** ships.

1.3.1.1 For **ESP** ships, it is mandatory that a specific survey programme shall be worked out by the shipowner in cooperation with the Register according to 1.3.1.6 in advance of any part of:

special survey;

intermediate survey of **ESP** ships more than 10 years of age.

The survey programme shall be in written format in accordance with the requirements of 1.3.1.2, 1.3.1.3 and Appendix 1.3-1. The hull survey shall not commence until the survey programme has been approved or confirmed by the Register (refer to 1.3.1.6). Prior to the development/review of the survey programme, the survey planning questionnaire shall be completed by the shipowner based on the information set out in Appendix 1.3-2 and forwarded to the Register.

The survey programme shall be worked out taking into account any amendments to the survey requirements implemented after the last special survey carried out.

At survey of the ship in case of changes in ship details, the scope of survey and thickness measurements, etc., such changes shall be verified by/agreed with the RS surveyor and taken into account in the survey programme, signed and stamped by the RS attending surveyor.

At intermediate survey, the survey programme for previous special survey may be allowed for use with a record "Valid for intermediate survey [an actual data shall be specified]" made, duly signed and stamped by the RS surveyor provided that the following conditions are met:

.1 the survey programme shall be supplemented by the information from the executive hull summary (form 6.3.41 or, in case of ship acceptance into the RS class — a similar document of Flag State MA or organization recognized by MA, for example, an executive hull summary of ACS — IACS member) of that special survey, and later relevant survey planning questionnaires, reports on survey of the hull, including technical supervision during repair/conversion/modernization;

.2 prior to commencement of the intermediate ship survey, the shipowner or a representative authorized by the shipowner shall submit a new survey planning questionnaire in accordance with Appendix 1.3-2;

.3 the survey programme shall be worked out taking into account any amendments to the survey requirements implemented after the last special survey carried out;

.4 the survey programme shall at least consider the requirements specified in 1.3.1.2, 1.3.1.3 and Appendix 1.3-1. When using the special survey programme submitted by the losing society as part of ship acceptance into the RS class, the references to the requirements of the losing society rules shall be replaced by the references to the appropriate requirements of the RS rules or, at least, the ESP Code or applicable IACS UR;

.5 any amendments to the survey programme shall be signed and stamped by the RS attending surveyor.

At initial survey for transfer of class, the survey programme developed or approved by the loosing ACS — IACS member for the relevant survey (intermediate or special) may be allowed for use with a record "Valid for initial survey [an actual date shall be specified]" made, duly signed and stamped by the RS surveyor, provided that the provisions specified in 1.3.1.1.1 — 1.3.1.1.5, 1.3.1.3 and 1.3.1.4 are met.

---

[1] Provisions of 1.3.1 and 1.3.6 shall be applied only to ESP ships, which are covered by Sections 2 to 6 of this Part.

1.3.1.2 In developing the Survey Programme, the following documentation shall be gathered and consulted with a view to selecting tanks, areas and structural elements to be examined:

.1 survey status and basic information on the ship;

.2 documentation on board, as described in 1.4.2 and 1.4.3;

.3 main scantling drawings of cargo holds, and cargo and ballast tanks, including information regarding use of high-tensile steels;

.4 previous executive hull summary (form 6.3.41 or, in case of ship acceptance into the RS class — a similar document of Flag State MA or organization recognized by MA, for example, an executive hull summary of ACS — IACS member);

.5 relevant executive hull summaries, reports, check-lists regarding previous damages and repairs;

.6 relevant reports, checklists/questionnaires (both the Register, shipowner and the losing society — IACS member) of previous surveys and inspections;

.7 information on the use of ship's holds and tanks, typical cargoes and other relevant data, and for oil tankers and chemical tankers, cargo and ballast history for the last 3 years, including carriage of cargo under heated conditions;

.8 details of the inert gas plant and tank cleaning procedures (for oil tankers and chemical tankers);

.9 information and other relevant data regarding conversion or modification of the ship's cargo and ballast holds/tanks since the time of construction;

.10 description and history of the coating and corrosion protection system (including previous class notations), if any;

.11 inspections by the shipowner's personnel during the last 3 years with reference to structural deterioration in general, leakages in tank boundaries and piping and condition of the coating and corrosion protection system, if any (for oil tankers and chemical tankers);

.12 information regarding the relevant maintenance level during operation including PSC reports of inspection containing hull related deficiencies, safety management system nonconformities relating to hull maintenance, including the associated corrective action(s); and

.13 any other information that will help to identify suspect areas and critical structural areas.

1.3.1.3 The submitted survey programme shall account for and comply, as a minimum, with the requirements for close-up survey, thickness measurements and tank testing, respectively (and pipeline testing — for chemical tankers) and shall contain the relevant information including at least:

.1 basic information on the ship and main particulars;

.2 main scantling drawings of cargo holds, and cargo and ballast tanks, including information regarding use of high-tensile steels;

.3 general arrangement of holds and tanks;

.4 list of holds and tanks with information on their use, availability of corrosion protection system and condition of hard protective coating;

.5 conditions for survey (e.g., information on the tank cleaning, gas freeing, ventilation, illumination, etc.);

.6 provision and methods for access to structures;

.7 equipment for survey;

.8 identification of holds, tanks and areas for close-up survey;

.9 identification of cross-sections for thickness measurements;

.10 identification of tanks for testing;

.11 identification of the firm engaged in residual thickness measurements;

.12 damage experience related to the ship in question;

.13 critical structural areas and suspect areas, where relevant.

The survey programme shall be worked out taking into account the instructions specified in Appendix 1.3-1.

1.3.1.4 The Register shall notify the shipowner of the maximum acceptable structural corrosion diminution levels applicable to the ship.

1.3.1.5 Use may also be made of the Guidelines for Technical Assessment of ESP Ships' Hulls in Conjunction with Planning for Special Enhanced Hull Survey given in Appendix 1.3.

1.3.1.6 A written request for the development by the Register of the Survey Planning Document (Survey Programme) or the programme worked out by the shipowner or authorized shipowner's representative shall be forwarded by the shipowner to the Register together with the completed and duly signed Survey Planning Questionnaire based on the information set out in Appendix 1.3-2, in advance (recommended not later than 1 month) prior to the commencement of the intermediate survey or the special survey. Programmes shall be reviewed by the RS Branch Office for in-service supervision or the RS Branch Office which will perform the survey of the ship (according to the request). Based on satisfactory review results, the programmes shall be approved by the Register and stamped as appropriate. Programmes development at the shipowner's request shall be carried out by the RS Branch Office, having in its staff relevant specialists for such work in accordance with the provisions of the RS internal procedure for training and competence maintenance of RS personnel. Upon development by the RS personnel, the programmes shall be endorsed by the head of the RS Branch Office. The programmes shall be made in English and may include translation into Russian at the shipowner's discretion. If the ship having the RF flag is not and will not be engaged on international voyages, the programme is allowed to be made only in Russian.

1.3.2 Conditions for survey.

1.3.2.1 The shipowner shall provide the necessary facilities for a safe execution of the survey.

.1 in order to enable the attending RS surveyors to carry out the survey, for proper and safe access when performing work in enclosed and confined spaces safety requirements specified in IACS PR No. 37 "Procedural Requirement for Confined Space Safe Entry" as well as in the internal Guidelines to the Occupational Safety Instructions for RS Surveyors Conducting Survey of Ships and Items of RS Technical Supervision shall be met. Provisions for access shall be agreed between the shipowner and the Register;

.2 details of the means of access shall be provided in the Survey Planning Questionnaire;

.3 in cases where the provisions of safety and required access are judged by the attending surveyors not to be adequate, the survey of the spaces involved shall not proceed.

1.3.2.2 Cargo holds, tanks and other spaces shall be safe for access. Cargo holds, tanks and other spaces shall be gas free and properly ventilated. Prior to entering a tank, void or enclosed/confined space, it shall be verified that the atmosphere in that space is free from hazardous gas and contains sufficient oxygen.

1.3.2.3 For survey and thickness measurements and to allow for a thorough examination, all spaces shall be cleaned including removal from surfaces of all loose accumulated corrosion scale. Spaces shall be sufficiently clean, dry and free from water, scale, dirt, oil residues, etc. to reveal corrosion, deformation, fractures, damages or other structural deterioration as well as the condition of the coating, and to carry out examination thereof and take measurements. However, those areas of structure whose renewal has already been decided by the shipowner need only be cleaned and descaled to the extent necessary to determine the limits of the areas to be renewed.

1.3.2.4 Sufficient illumination shall be provided to reveal substantial corrosion, deformation, fractures, damages or other structural deterioration, as well as the condition of the coating.

1.3.2.5 Where soft or semihard coatings have been applied, safe access shall be provided for the surveyor to verify the effectiveness of the coating and to carry out an assessment of the conditions of internal structures, which may include spot removal of the coating. When safe access cannot be provided, the soft or semihard coating shall be removed.

As for requirements related to semihard coatings, these coatings, if already applied, shall not be regarded as a permission for waiving the annual internal survey of the ballast tanks beginning from the next special or intermediate survey commenced on or after 1 July 2010, whichever comes first.

1.3.3 Access to structures.

1.3.3.1 For overall surveys, means shall be provided to enable the surveyor to examine the structure in a safe and practical way.

1.3.3.2 For close-up survey of hull structures, one or more of the following means for access, acceptable to the surveyor, shall be provided:

.1 permanent staging and passages through structures;

.2 temporary staging and passages through structures;

.3 hydraulic arm vehicles such as conventional cherry pickers, lifts and movable platforms;

.4 boats and rafts;

.5 portable ladders;

.6 other equivalent means.

1.3.3.3 For close-up surveys in cargo hold shell frames of bulk carriers (under 100000 deadweight), one or more of the following means for access, acceptable to the surveyor, shall be provided:

.1 permanent staging and passages through structures;

.2 temporary staging and passages through structures;

.3 portable ladders restricted to not more than 5 m in length may be accepted for surveys of lower section of a shell frame including brackets;

.4 hydraulic arm vehicles such as conventional cherry pickers, lifts and movable platforms;

.5 buoyant apparatus or rafts, provided the hold structure is sufficient to withstand static loads at all levels of water;

.6 other equivalent means.

1.3.3.4 For close-up surveys of the cargo hold shell frames of bulk carriers (100000 deadweight and above), the use of portable ladders is not accepted, and one or more of the following means for access, acceptable to the surveyor, shall be provided:

.1 at annual surveys, intermediate surveys of ships less than 10 years of age and the first special survey:

.1.1 permanent staging and passages through structures;

.1.2 temporary staging and passages through structures;

.1.3 hydraulic arm vehicles, such as conventional cherry pickers, lifts and movable platforms;

.1.4 boats or rafts, provided the hold structure is sufficient to withstand static loads at all levels of water;

.1.5 other equivalent means;

.2 at subsequent intermediate and special surveys:

.2.1 permanent or temporary staging and passages through structures;

.2.2 hydraulic arm vehicles, such as conventional cherry pickers for surveys of lower and middle part of shell frames as alternative to staging;

.2.3 lifts and movable platforms;

.2.4 boats or rafts, provided the hold structure is sufficient to withstand static loads at all levels of water;

.2.5 other equivalent means.

Notwithstanding the above requirements:

the use of a portable ladder fitted with a mechanical device to secure the upper end of the ladder is acceptable for close-up survey of a limited amount of frames as required in 5.3.2.4.3.2 and 5.3.2.4.4.2;

the use of hydraulic arm vehicles or aerial lifts ("Cherry picker") may be accepted by the attending RS surveyor for the close-up survey of the upper part of side shell frames or other structures in all cases where the maximum working height is not more than 17 m.

1.3.3.5 For oil tankers and bulk carriers covered by the provisions of regulation II-1/3-10 of SOLAS-74, as amended, the Ship Structure Access Manual shall be available on board the ship. Besides, considering the provisions of 2.10 and 2.11 of the Guidelines on Technical Supervision of Ships under Construction, this document is a part of the Ship Construction File, which shall be available on board.

1.3.3.5.1 During survey of ESP oil tankers and bulk carriers covered by provisions of regulation II-1/3-10 of SOLAS-74, as amended, with the shipowner ensuring safe conduct of the survey, the RS surveyor shall also be guided by the provisions of the Ship Structure Access Manual and check that such Manual is available on board the ship (refer also to IACS UI SC191 "For the application of amended SOLAS regulation II-1/3-6 (resolution MSC.151(78)) and revised Technical provisions for means of access for inspections (IMO resolution MSC.158(78))", as amended and IACS Recommendation No. 90 "Ship Structure Access Manual" (Rev.1, Apr 2019) version in force).

1.3.3.5.2 In respect of means of access to structures of bulk carriers and oil tankers covered by requirements of regulation II-1/3-10 of SOLAS-74, as amended, except for provisions of SOLAS-74, as amended (refer to IMO resolutions MSC.133(76), MSC.151(78), MSC.158(78), etc.), provisions of IACS UI shall also be met:

SC190 "For Application of SOLAS Regulation II-1/3-6 (Res MSC.134(76)) and Technical Provisions on Permanent Means of Access (Res MSC.133(76)) (Rev.1 Apr 2019))", as amended;

SC191, as amended.

1.3.3.6 In compliance with regulation II-1/3-6 of SOLAS-74, as amended the means of access shall be subject to survey prior to, or in conjunction with, their use when carrying out surveys in compliance with regulation I/10 of SOLAS-74 as amended.

In compliance with IACS UI SC190:

permanent means of access (hereinafter referred to as PMA), including portable equipment and attachments, shall be periodically inspected by the crew or appointed competent person (inspector) of the Company (according to the ISM Code) to confirm that PMA remain in serviceable condition (refer to the PMA Inspection Procedure).

1.3.3.6.1 PMA Inspection Procedure:

.1 any authorized person using PMA and acting as the PMA inspector shall check for obvious damage prior to using the access arrangements. Whilst using PMA, the inspector shall verify the condition of PMA and sections used by close-up examination and note any deterioration in their condition. Should any damage or deterioration be found, the effect of such damage/deterioration shall be assessed as to whether the damage or deterioration affects the safety for the PMA continued use. Damage/deterioration found that is considered to affect the PMA safe use shall be determined as "substantial damage" and measures shall be put in place to ensure that the affected section(s) shall not be further used prior effective repair;

.2 statutory survey of any space that contains PMA shall include verification of the continued effectiveness of PMA in that space. Survey requirements of PMA shall not be

expected to exceed the scope and extent of the survey being undertaken. If PMA is found deficient, the scope of survey shall be extended;

.3 records of all inspections shall be established with specific requirements detailed in the ship's Safety Management System. The record shall be readily available to persons using PMA and it is recommended that a copy be attached to the Ship Structure Access Manual. The original records shall include as a minimum the date of the inspection, the name and title of the inspector, a confirmation signature, PMA and sections of PMA inspected, verification of continued serviceable condition or details of any deterioration or substantial damage found. A file of permits issued shall be maintained for verification.

1.3.4 Equipment for survey.

1.3.4.1 Thickness measurements shall normally be carried out by means of ultrasonic test equipment. The accuracy of the equipment shall be proven to the surveyor as required.

1.3.4.2 One or more of the following fracture detection procedures may be required, if deemed necessary by the surveyor:

radiographic inspection;
ultrasonic inspection;
magnetic particle inspection;
dye penetrant inspection.

1.3.4.3 Explosimeter, oxygen-meter, breathing apparatus, lifelines, riding belts with rope and hook and whistles together with instructions and guidance on their use shall be made available during the survey. A safety checklist shall be provided.

1.3.4.4 Adequate and safe lighting shall be provided for the safe and efficient conduct of the survey.

1.3.4.5 Adequate protective clothing shall be made available and used during the survey (e.g. safety helmet, gloves, safety shoes, etc).

1.3.4.6 At survey with the use of RIT, the provisions of 4.14, Part I "General Provisions" shall be met.

1.3.4.7 In addition to 1.3.4.6, remote inspection techniques are considered alternative means of access, using which the provisions of IACS UI SC190 and SC191, IACS recommendation No. 91 "Guidelines for Approval/Acceptance of Alternative Means of Access" (Rev.3, Apr 2019), as amended, applicable to oil tankers and bulk carriers covered by regulation II-1/3-6 of SOLAS-74 as amended shall be also met.

1.3.5 Rescue and emergency response equipment.

If breathing apparatus and/or other equipment is used as "rescue and emergency response equipment" then it is recommended that the equipment shall be suitable for the configuration of the space being surveyed.

1.3.6 Survey at sea or at anchorage.

At the shipowner's discretion, the survey of the ship at sea or at anchorage may be accepted provided the following below measures have been taken by the shipowner and the personnel onboard to ensure safe execution of the survey by the RS surveyor(s).

1.3.6.1 Precautions and procedures for carrying out surveys shall be in accordance with 1.3.1 — 1.3.4.

1.3.6.2 A communication system shall be arranged between the survey party in the tank and the responsible officer on deck. This system shall also include the personnel in charge of ballast pump handling if boats or rafts are used.

1.3.6.3 A gas analyzer, oxygen meter, breathing apparatus, lifeline and whistles shall be at hand during the survey. A safety checklist shall be provided.

1.3.6.4 When rafts or boats will be used for close-up survey, the following conditions shall be observed:

.1 only rough duty, inflatable rafts or boats, having satisfactory residual buoyancy and stability even if one chamber is ruptured, shall be used;

.2 the boat or raft shall be tethered to the access ladder and an additional person shall be stationed down the access ladder with a clear view of the boat or raft;

.3 appropriate lifejackets shall be available for all participants;

.4 the surface of water in the tank shall be calm (under all foreseeable conditions the expected rise of water within the tank shall not exceed 0,25 m) and the water level shall be stationary. On no account the level of the water is rising while the boat or raft is in use;

.5 the tank, hold or space shall contain clean ballast water only. Even a thin sheen of oil on the water is not acceptable;

.6 at no time shall the water level be allowed to be within 1 m of the deepest underdeck web face flat so that the survey team is not isolated from a direct escape route to the tank hatch. Filling to levels above the deck transverses shall be only contemplated if a deck access manhole is fitted and open in the bay being examined, so that an escape route for the survey party is available at all times. Other effective means of escape to the deck may be considered;

.7 if the tanks (or spaces) are connected by a common venting system, or inert gas system, the tank in which the boat or raft is used shall be isolated to prevent a transfer of gas from other tanks (or spaces).

1.3.6.5 Surveys of tanks by means of boats or rafts may only be undertaken with the agreement of the surveyor, who shall take into account the safety arrangements provided, including weather forecasting and ship response in reasonable sea conditions, and when the expected rise of water in the tank does not exceed 0,25 m.

1.3.6.6 Boats or rafts alone may be allowed for survey of the underdeck areas for tanks and spaces, if the web height of frame members is 1,5 m or less.

1.3.6.7 Where the web height of frame members is over 1,5 m, boats and rafts may be used, provided that the following requirements are met:

.1 the coating of underdeck members is in GOOD condition and has no signs of wear;

.2 permanent means of access for safe entry and exit in each framing is provided.

Such means of access shall be:

a vertical ladder providing walkway immediately from the deck and a small platform shall be installed approximately 2 m below the deck in each framing; or

ladders of the permanent longitudinal platform in each tank end providing access to the deck.

The platform shall, for the full length of the tank, be arranged in level with, or above, the maximum water level needed for rafting of under deck structure. For this purpose, the ullage corresponding to the maximum water level shall be assumed not more than 3 m from the deck plate measured at the midspan of deck transverses and in the middle length of the tank (refer to Fig. 1.3.6.7).

If neither of the above conditions are met, then staging or an "other equivalent means" shall be provided for the survey of the under deck areas.

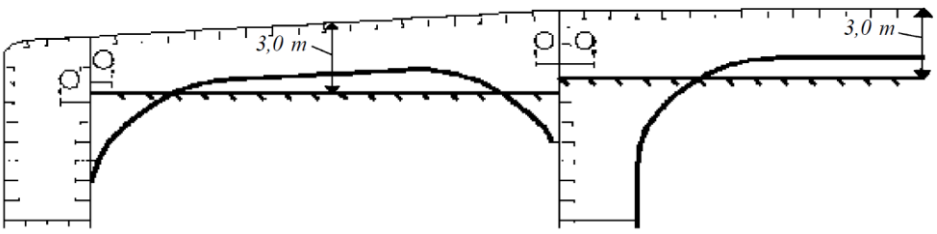

Fig. 1.3.6.7

1.3.6.8 Application of boats or rafts only, as specified in 1.3.6.5 and 1.3.6.6 does not exclude their use within the tank length during the survey.

1.3.7 Survey Planning Meeting.

1.3.7.1 Proper preparation and close co-operation between the attending surveyor(s) and the shipowner's representatives onboard prior to and during the survey are an essential part in the safe and efficient conduct of the survey. During the survey on board safety meetings shall be held regularly.

1.3.7.2 Prior to commencement of any part of the renewal and intermediate survey, a survey planning meeting shall be held between the attending surveyor(s), the shipowner's representative in attendance, the thickness measurement firm operator (as applicable) and the master of the ship or the representative(s) having relevant qualification and appointed by the master or the shipowner for the purpose to ascertain that all the arrangements envisaged in ESP are in place, so as to ensure the safe and efficient conduct of the survey work to be carried out (refer also to 1.6.1.2).

1.3.7.3 The following is an indicative list of items that shall be addressed in the meeting:

.1 schedule of the ship (i.e. the voyage, docking and undocking manoeuvres, periods alongside, cargo and ballast operations, etc.);

.2 provisions and arrangements for thickness measurements (i.e. access, cleaning/de-scaling, illumination, ventilation, personal safety);

.3 extent of the thickness measurements;

.4 acceptance criteria (refer to the list of minimum thicknesses);

.5 extent of close-up survey and thickness measurement considering the coating condition and suspect areas/areas of substantial corrosion;

.6 execution of thickness measurements;

.7 taking representative readings in general and where uneven corrosion/pitting is found;

.8 mapping of areas of substantial corrosion;

.9 communication between attending surveyor(s) the thickness measurement firm operator(s) and shipowner representative(s) concerning findings.

1.3.7.4 The results of the meeting shall be documented in the appropriate report.

Appendix 1.3

GUIDELINES FOR TECHNICAL RISK ASSESSMENT IN CONJUNCTION WITH PLANNING FOR SPECIAL ENHANCED HULL SURVEY

1 INTRODUCTION

1.1 These Guidelines contain information and suggestions concerning technical risk assessment, the results of which may be of use in conjunction with planning for special enhanced hull surveys of ESP ships.

2 PURPOSE AND PRINCIPLES

2.1 Purpose.

The purpose of the technical risk assessment described in these Guidelines is to assist in identifying critical structural areas, nominating suspect areas and in focusing attention on structural elements, which may be particularly susceptible to wastage or damage. This information may be useful in nominating locations, areas and tanks for thickness measurements, close-up survey and tank testing.

Critical structural areas are locations, which have been identified from calculations to require monitoring or from the service history of the subject ship or from similar or sister ships to be sensitive to cracking, buckling or corrosion, which may impair the structural integrity of the ship.

2.2 Minimum requirements.

However, these Guidelines shall not be used to reduce the requirements pertaining to thickness measurements, close-up survey and tank testing specified in the relevant chapters of Sections 2 — 6, which shall be, in all cases, complied with as the minimum.

2.3 Timing.

As with other aspects of survey planning, the technical risk assessments described in these Guidelines shall be worked out by the shipowner or operator in cooperation with the Register well in advance of the commencement of the special survey and normally at least 12 to 15 months before the survey completion.

2.4 Aspects to be considered.

Technical assessment, which may include quantitative or qualitative evaluation of relative risks of possible deterioration, of the following aspects of a particular ship may be used as a basis for nomination of holds, tanks and areas for survey:

.1 design features, such as stress levels on various structural elements, design details and extent of use of high tensile steel;

.2 former history with respect to corrosion, deformation and repairs for the particular ship, as well as similar ships, where available;

.3 information on the types of cargoes carried, use of holds/tanks for receipt of cargo/ballast, corrosion protection of holds and tanks, and condition of coating, if any.

Technical assessment of risk of susceptibility to damage or deterioration of various structural elements and areas shall be performed on the basis of recognized principles and taking into account the practice of technical supervision.

3 TECHNICAL RISK ASSESSMENT

3.1 General.

There are three basic types of possible failure, which may be the subject of technical risk assessment in connection with planning of surveys: corrosion, fractures and deformations. Contact damages are not normally covered by the survey planning since they are usually noted in accident reports and assumed to be dealt with as a normal routine by the RS surveyor.

Technical risk assessments performed in conjunction with the survey planning process shall, in principle, be as shown schematically in Fig. 3.1.

This approach is basically an evaluation of the risk in the following aspects based on the knowledge and experience related to the ship hull structure and wear.

Ship hull structure shall be considered with respect to structural members, which may be susceptible to deformations or cracking as a result of vibration, high stress levels or fatigue. Wear is related to the ageing process and is closely connected with the quality of corrosion prevention system fitted at newbuilding and subsequent maintenance during the service life. Wear may also lead to cracking and/or deformations.

3.2 Methods.

3.2.1 Design details.

Damage experience related to the ship in question and similar ships, where available, is the main source of information to be used in the survey planning process. In addition, a selection of structural details from the design drawings shall be included.

Typical damage experience to be considered shall consist of number, extent, location and frequency of cracks, as well as location of buckles.

This information may be found in the previous survey reports and/or the results of the shipowner's own inspections. The defects shall be analyzed, noted and marked on drawings.

In addition, experience of the ships' operation shall be utilized. Also, reference shall be made to the IACS publications, which contain a catalogue of typical damages and proposed repair methods for various structural members.

The review of structural drawings, in addition to application of the above-mentioned IACS publications, shall include checking of typical structural members where cracking has been experienced. During repair of damaged structures and areas, as well as for prevention of possible damages, the factors contributing to damages shall be carefully considered.

Special attention shall be paid to the structures made of high tensile steels. Hull members showing good service experience, where ordinary mild steel has been used, may be more susceptible to damage when high tensile steel and its higher associated stresses are utilized.

Stress calculations of typical essential assemblies and members shall be carried out in compliance with the requirements of Part II "Hull" of the Rules for the Classification and Construction of Sea-Going Ships and the Strength Standards for Sea-Going Ships.

The selected areas of a structure identified with use of the above requirements shall be recorded and marked on the drawings to be included in the Survey Programme.

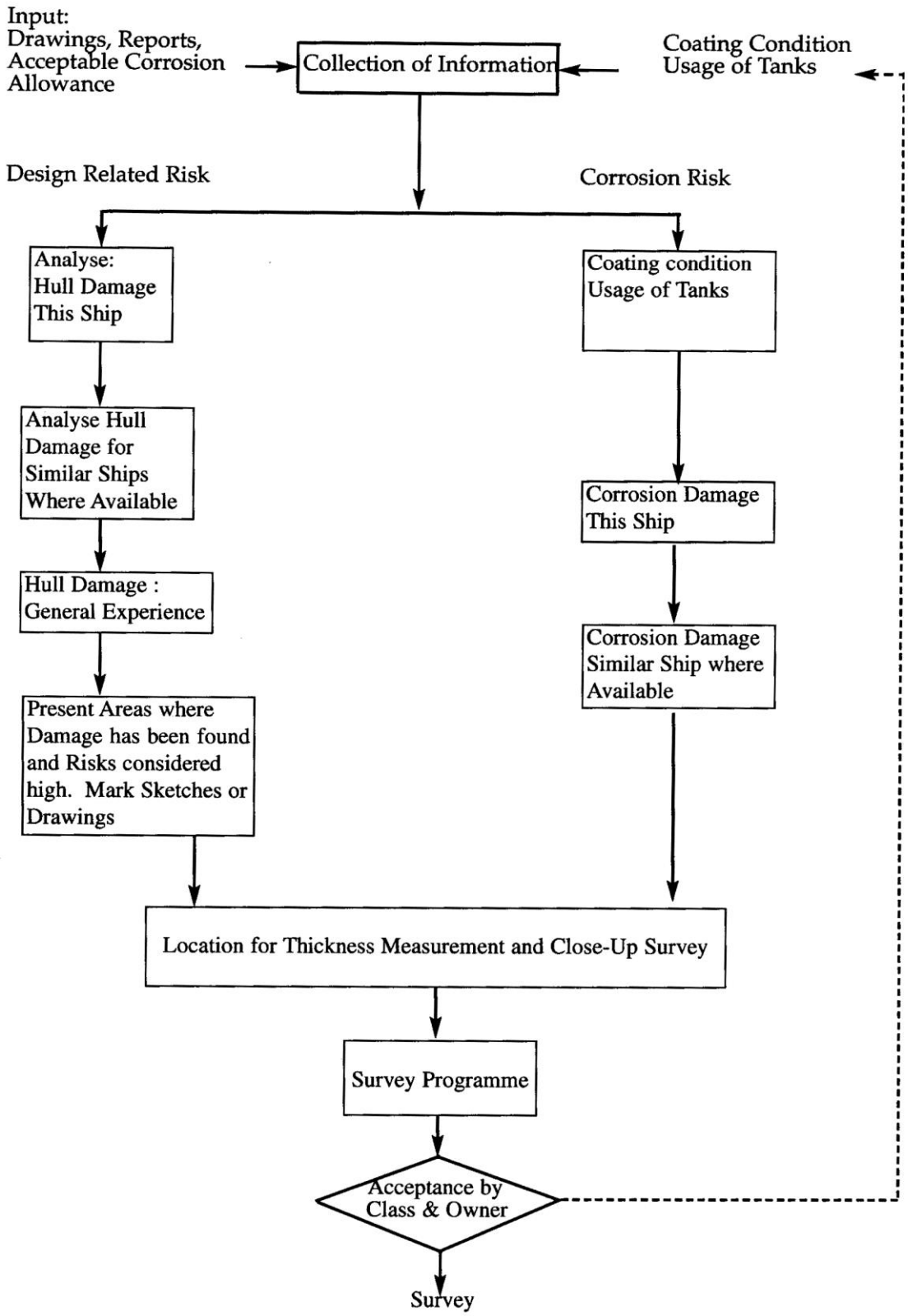

Fig. 3.1
Schematic block-diagram of technical risk assessment and survey planning process

3.2.2 Corrosion.

In order to evaluate corrosion risks, the following information shall be generally considered:

.1 usage of tanks, holds and spaces;
.2 condition of coatings;
.3 cleaning and washing procedures for tanks and holds;
.4 previous corrosion damages;
.5 ballast use and time for cargo holds and tanks;
.6 risk of corrosion in cargo holds, and cargo and ballast tanks;
.7 location of heated tanks;
.8 location of ballast tanks adjacent to heated fuel oil tanks.

The evaluation of corrosion risks shall be based on the above information together with the relevant information on the anticipated condition of the ship as derived from the information collected in order to prepare the Survey Programme and the age of the ship.

The various holds, tanks and spaces shall be listed with the corrosion risks nominated accordingly.

3.2.3 Locations for close-up survey and thickness measurements.

On the basis of the table of corrosion risks and the evaluation of design experience, the locations for initial close-up survey and hull cross-sections for thickness measurements may be nominated.

The hull cross-sections subject to thickness measurements shall normally be nominated in tanks, holds and spaces where corrosion risk is judged to be the highest.

The nomination of tanks, holds and spaces for close-up survey shall be, initially, based on the corrosion risk, and shall include the ballast tanks. Selection shall be based on the principle that the risk is increased by the ship's age and that insufficient or unreliable information is also an important factor for carrying out the survey.

Appendix 1.3-1

ENHANCED SURVEY PROGRAMME TEMPLATE

INTRODUCTION

The survey programme shall be developed/amended taking into account the provisions of 1.3, in particular the requirements of 1.3.1.1 — 1.3.1.6. The survey programme shall include at least the following sections specified below together with instructions for filling-in. The survey programme shall be completed in cooperation with the shipowner (the survey programme shall be signed and stamped by the shipowner who shall specify the firm name, signatories' full names, date of signing, as well as the record "Approved" or "Endorsed", as applicable). Upon development of survey programmes by the RS personnel, the RS Branch Offices shall use uniform templates of survey programmes posted on the RS internal website.

BASIC INFORMATION AND PARTICULARS

Name of ship:
IMO number:
Flag State:
Port of registry:
Gross tonnage:
Deadweight, metric tonnes:
Length between perpendiculars, m:
Shipbuilder:
Hull number:
Classification Society:
Class ID:
Date of build of the ship:
Shipowner:
Thickness measurement firm:

1 PREAMBLE

1.1 Scope.

1.1.1 The present survey programme covers the minimum extent of overall surveys, close-up surveys, thickness measurements and pressure testing within the cargo area, cargo tanks, ballast tanks, including fore and aft peak tanks, required by International Code on the Enhanced Programme of Inspections during Surveys of Bulk Carriers and Oil Tankers, 2011 (ESP Code) (IMO resolution A.1049(27) as amended[1]) and IACS UR Z10.1, Z10.2, Z10.3, Z10.4, Z10.5, as applicable.

1.1.2 The arrangements and safety aspects of the survey shall be acceptable to the attending surveyors.

1.2 Documentation.

All documents used in the development of the survey programme shall be available onboard during the survey as required by 1.4.

[1] From 1 January 2021 the amendments introduced by IMO resolution MSC.461(101), which completely replace the ESP Code shall enter into force.

2 ARRANGEMENT OF CARGO HOLDS, TANKS AND SPACES

This section of the survey programme shall provide information (either in the form of plans or text) on the arrangement of cargo holds, tanks and spaces that fall within the scope of the survey.

3 LIST OF CARGO HOLDS, TANKS AND SPACES WITH INFORMATION ON THEIR USE, EXTENT OF COATINGS AND CORROSION PROTECTION SYSTEM

This section of the survey programme shall indicate any changes relating to (and shall update) the information on the use of the holds and tanks of the ship, the extent of coatings and the corrosion protective system provided in the Survey Planning Questionnaire.

4 CONDITIONS FOR SURVEY

This section of the survey programme shall provide information on the conditions for survey, e.g. information regarding cargo hold and tank cleaning, gas freeing, ventilation, lighting, etc.

5 PROVISIONS AND METHOD OF ACCESS TO STRUCTURES

This section of the survey programme shall indicate any changes relating to (and shall update) the information on the provisions and methods of access to structures provided in the Survey Planning Questionnaire.

6 LIST OF EQUIPMENT FOR SURVEY

This section of the survey programme shall identify and list the equipment that will be made available for carrying out the survey and the required thickness measurements.

7 SURVEY REQUIREMENTS

7.1 Overall survey.

This section of the survey programme shall identify and list the spaces that shall undergo an overall survey for the ship in accordance with 2.2.3.1, 3.2.3.1, 4.2.3.1, 5.2.3.1 or 6.2.3.1, as applicable.

7.2 Close-up survey.

This section of the survey programme shall identify and list the hull structures that shall undergo a close-up survey for the ship in accordance with 2.2.3.1, 3.2.3.1, 4.2.3.1, 5.2.3.2 or 6.2.3.2, as applicable.

Structures, ship spaces shall be identified taking into account the fact that at special and subsequent intermediate/special surveys the selection of structures shall be based both on the requirements of these Rules and the results of previous surveys as well as thickness measurements. Where at special survey, the close-up survey and thickness measurements have been performed in accordance with these Rules for a certain number of web frames, transverse bulkheads in individual ship spaces, the same structures and ship spaces shall not be selected again at subsequent intermediate survey carried out in the scope of special survey, or at special survey provided that meets the requirements of these Rules (for example, all transverse bulkhead in all ballast tanks shall be measured, etc.) and condition of these structures is not worse than that of the others based on the previous survey results

(for example, if at the second special survey of the oil tanker, one transverse member (frame No.) in cargo tanks Nos. X and Y has been selected, then at subsequent intermediate survey another frame No. in other cargo tanks shall be selected). A note shall be introduced in the survey programme that the scope of close-up survey, structures subject to close-up survey, location of thickness measurements to be carried out concurrently with the close-up survey, may be changed by the RS surveyor based on the results of the current survey and thickness measurements.

8 IDENTIFICATION OF TANKS FOR TANK TESTING

This section of the survey programme shall identify and list the cargo holds and tanks that shall undergo testing for the ship in accordance with 2.2.5, 3.2.5, 4.2.5, 5.2.5 or 6.2.5, as applicable.

9 IDENTIFICATION OF AREAS AND SECTIONS FOR THICKNESS MEASUREMENTS

This section of the survey programme shall identify and list the areas and sections where thickness measurements shall be taken in accordance with 2.2.4, 3.2.4, 4.2.4, 5.2.4 or 6.2.4, as applicable. When nominating transverse sections for thickness measurements the following shall be met: transverse sections shall be chosen in the amidship area where the largest reductions are revealed from deck and/or bottom plating measurements at the previous and/or current measurements. Besides, location of transverse sections to be measured shall be selected on a rotation basis to avoid their repetition during the 5-year period. For oil tankers, combination carriers and chemical tankers, at least one location shall include the ballast tank amidships. A note shall be introduced in the programme that location of transverse sections to be measured may be changed by the RS surveyor based on the results of current measurements indicating condition deterioration of other areas of deck and/or bottom plating as compared to the previous thickness measurements (refer to 3.2.2 of Annex 2 to these Rules).

10 PERMISSIBLE SCANTLINGS OF HULL STRUCTURES

This section of the survey programme shall contain permissible scantlings of ship's hull structures, which are subject to survey and thickness measurements. Information on permissible scantlings of hull structures shall be provided tabular form at least in format of Table 1.3-1.1.1 or 1.3-1.1.2 depending on the ship's type.

In case of availability of information on permissible scantlings of hull structures in tabular form from the calculation (refer to Annex 2) agreed by RHO or the RS Branch Office authorized by RHO, it is allowed to introduce existing table from the calculation into the programme instead of those shown in Tables 1.3-1.1.1, 1.3-1.1.2, provided it contains all hull members given in Table 1.3-1.1.1 or 1.3-1.1.2, and that information is translated into English (if applicable). At that, the title (first) page of the calculation agreed by the Register with appropriate stamp shall be added to the programme.

If the table made in accordance with Table 1.3-1.1.1 or 1.3-1.1.2, contains information on permissible scantlings of hull structures determined according to wear allowances in compliance with these Rules or ACS — IACS member rules (whatever is applicable) from as-built thickness of the hull member, the information on such permissible wear allowances shall be given in appendix to the programme.

It is recommended to indicate information on permissible scantlings of hull structures, calculated for local wear and pitting, as well as on additional hull members and arrangements, which are subject to thickness measurements.

For ships to which IACS URs (e.g. S19, S21, S22, S31, etc.) apply, the survey programme shall additionally include the structure assessment criteria in accordance with applicable IACS URs.

For **CSR** ships, the permissible scantlings of hull structures are specified in the relevant drawings/ plans (refer to 1.4.3 and 1.8). Introduction of the summarized information into the survey programme is of a recommendatory nature.

Table 1.3-1.1.1

Permissible scantlings of hull structures for bulk carriers

Area or location[1]	Original as-built thickness, in mm	Minimum thickness, in mm	Substantial corrosion thickness, in mm
Deck			
Plating			
Longitudinals			
Longitudinal girders			
Cross deck plating			
Cross deck stiffeners			
Bottom			
Plating			
Longitudinals			
Longitudinal girders			
Inner bottom			
Plating			
Longitudinals			
Longitudinal girders			
Floors			
Ship side in way of topside tanks			
Plating			
Longitudinals			
Ship side in way of hopper side tanks			
Plating			
Longitudinals			
Ship side in way of double hull			
Plating			
Longitudinals or ordinary frames			
Longitudinal girders			
Ship side in way of tanks			
Plating			
Longitudinals			
Longitudinal stringers			
Ship side in way of cargo holds			
Plating			
Side frames webs			
Side frames flanges			
Upper brackets webs			
Upper bracket flanges			
Lower bracket webs			
Lower bracket flanges			
Longitudinal bulkhead (inside)			
Plating			
Longitudinals or ordinary frames			
Longitudinal girders			
Transverse bulkheads			
Plating			
Stiffeners			

Upper stool plating Upper stool stiffeners Lower stool plating Lower stool stiffeners **Transverse web frames, floors and stringers** Plating Flanges Stiffeners Cross ties Flanges Webs **Transverse web frames in topside tanks** Plating Flanges Stiffeners **Transverse web frames in double hull** Plating Flanges Stiffeners **Transverse web frames in hopper tanks** Plating Flanges Stiffeners **Hatch covers** Plating Stiffeners **Hatch coamings** Plating Stiffeners			
[1] The Table shall contain the items applicable to the particular ship only.			

Table 1.3-1.1.2

Permissible scantlings of hull structures for oil tankers (chemical tankers)

Area and location[1]	As-built thickness, in mm	Permissible residual thickness, in mm	Upper limit of substantial corrosion area, in mm
Decks Plating Longitudinals Longitudinal girders **Bottom** Plating Longitudinals Longitudinal girders **Ship side** Plating Longitudinals Longitudinal girders **Longitudinal bulkhead** Plating Longitudinals Longitudinal girders **Inner bottom** Plating Longitudinals Longitudinal girders **Transverse bulkheads** Plating Stiffeners Stanchions			

Web frames, floors and stringers Plating Flange Stiffeners Cross ties			
[1] The Table shall contain the items applicable to the particular ships only.			

11 THICKNESS MEASUREMENT FIRM

This section of the survey programme shall identify changes, if any, relating to the information on the thickness measurement firm provided in the Survey Planning Questionnaire

12 DAMAGE EXPERIENCE RELATED TO THE SHIP

This section of the survey programme shall, using Tables 1.3-1.2 and 1.3-1.3, provide details of the hull damages for at least the last three years in way of the cargo holds, ballast tanks and void spaces within the cargo length area. These damages are subject to survey.

Table 1.3-1.2

Hull damages sorted by location for the ship

Tank or space number or area	Possible cause, if known	Description of the damages	Location	Repair	Date of repair

Table 1.3-1.3

Hull damages for sister or similar ships (if available) in the case of design related damage

Tank or space number or area	Possible cause, if known	Description of the damages	Location	Repair	Date of repair

13 AREAS IDENTIFIED WITH SUBSTANTIAL CORROSION FROM PREVIOUS SURVEYS

This section of the survey programme shall identify and list the areas of substantial corrosion from previous surveys.

14 CRITICAL STRUCTURAL AREAS AND SUSPECT AREAS

This section of the survey programme shall identify and list the critical structural areas and the suspect areas, if such information is available.

15 OTHER RELEVANT COMMENTS AND INFORMATION

This section of the survey programme shall provide any other comments and information relevant to the survey.

The following documents shall be appended to the programme.

1. Paragraph 1.3.1.3 of this Part requires that main structural plans of cargo holds and ballast tanks (scantling drawings), including information regarding use of high tensile steel, to be available. This Appendix of the survey programme shall identify and list the main structural plans, which form part of the survey programme.

2. The Survey Planning Questionnaire (refer to Annex 1.3-2), which has been submitted by the shipowner.

3. Part "Other documentation" of the programme shall identify and list any other documentation that forms part of the drawings.

Appendix 1.3-2

SURVEY PLANNING QUESTIONNAIRE

The following information will enable the shipowner in co-operation with the Register to develop a survey programme complying with the requirements of Appendix 1.3-1. It is essential that the shipowner provides, when completing the present questionnaire, up-to-date information. The present questionnaire, when completed, shall provide all information and material required by ESP Code (IMO resolution A.1049(27) as amended) and IACS UR Z10.1, Z10.2, Z10.3, Z10.4, Z10.5, as applicable.

PARTICULARS

Ship's name:
IMO number:
Flag State:
Port of registry:
Shipowner:
Classification Society:
Class ID:
Gross tonnage:
Deadweight, metric tonnes:
Date of build:

INFORMATION ON ACCESS PROVISION FOR CLOSE-UP SURVEYS AND THICKNESS MEASUREMENT

The shipowner shall indicate in Tables 1.3-2.1 and 1.3-2.2, depending on the ship type, the means of access to the structures subject to close-up survey and thickness measurement. A close-up survey is an examination where the details of structural components are within the close visual inspection range of the attending surveyor, i.e. normally within reach of hand.

Table 1.3-2.1

Information on access provision for close-up survey and thickness measurement (for oil tankers)

Tank No.	Structure	C (Cargo)/ B (Ballast)	Temporary staging		Rafts	Ladders	Direct access	Other means (please specify)
F.P	Fore peak							
A.P.	Aft peak							
Wing tanks	Under deck Side shell and framing Bottom transverse Longitudinal girders Transverse bulkheads							
Centre tanks	Under deck Bottom transverse Transverse bulkheads							

Table 1.3-2.2

Information on access provision for close-up survey and thickness measurement (for bulk carriers)

Hold/Tank No.	Structure	Temporary staging	Rafts	Ladders	Direct access	Other means (please specify)	Permanent means of access
F.P.	Fore peak						
A.P.	After peak						
Cargo holds	Hatch side coamings Topside sloping plate Upper stool plating Cross deck Side shell, frames and brackets Double skin tank plating (where applicable) Transverse bulkhead Hopper tank platting Lower stool Tank top						
Topside tanks	Underdeck structure Side shell and structure Sloping plate and structure Webs and bulkheads						
Hopper tanks	Hopper sloping plate and structure Side shell and structure Bottom structure Webs and bulkheads						
Double side skin tanks (where applicable)	Side shell and structure Inner skin and structure Webs and bulkheads Double bottom structure Upper stool internal structure Lower stool internal structure						
Wing tanks of ore carriers (where applicable)	Underdeck and structure Side shell and structure Side shell vertical web and structure Longitudinal bulkhead and structure Longitudinal bulkhead web and structure Bottom plating and structure Cross ties/stringers						

HISTORY OF CARGOES CARRIED ON THE SHIP

For oil tankers this Section shall contain a history of cargo with H2S content or heated cargo for the last 3 years together with indication as to whether cargo was heated and, where available, material safety data sheets (MSDS) (refer to IMO resolution MSC.150(77) containing recommendation for material safety data sheets for MARPOL Annex I cargoes and marine fuel oils).

For chemical tankers this Section shall contain a history of heated cargo for the last 3 years together with indication as to whether cargo was heated.

For bulk carriers this Section shall contain a history of bulk cargoes of a corrosive nature (e.g. high sulphur content).

SHIPOWNER'S INSPECTIONS

Using a format similar to that of Table 1.3-2.3 (which is given as an example), the shipowner shall provide details of the results of their inspections for the last 3 years (in accordance with IACS UR Z10.1, Z10.2, Z10.3, Z10.4, Z10.5) on all cargo holds, ballast tanks and void spaces within the cargo area.

Table 1.3-2.3

Tank/Hold No.	Corrosion protection[1]	Coating extent[2]	Coating condition[3]	Structural deterioration[4]	Tank and hold damage[5]
Cargo centre tanks (for oil tankers) Cargo wing tanks (for oil tankers) Slop tanks (for oil tankers) Cargo holds Topside tanks Hopper tanks Double bottom tanks Double side skin tanks (where applicable) Wing tanks (ore carriers) Upper stools Lower stools Ballast tanks Fore peak After peak Miscellaneous spaces					

[1] HC = hard coating; SC = soft coating; SH = semihard coating; NP = no protection.
[2] U = upper part; M = middle part; L = lower part; C = complete.
[3] G = good; F = fair; P = poor; RC = recoated (during the last 3 years).
[4] N = no findings recorded; Y = findings recorded. (Description of findings shall be attached to the Questionnaire).
[5] DR = damage and repair; L = leakages; CV = conversion. (Description shall be attached to the Questionnaire).
N o t e . Indicate tanks, which are used for oil/ballast.

Name of shipowner's representative: _____
Signature: _____
Date: _____

REPORTS OF PORT STATE CONTROL INSPECTIONS

List the reports of PSC inspections containing hull structural related deficiencies and relevant information on rectification of the deficiencies:

_____
_____

SAFETY MANAGEMENT SYSTEM

List nonconformities related to hull maintenance, including the associated corrective actions:

_____

Name and address of the approved thickness measurement firm:

_____ .

1.4 DOCUMENTATION ON BOARD ESP SHIPS

1.4.1 General.

1.4.1.1 For **ESP** ships, the shipowner shall supply, provide avialability and maintainance on board of the documentation specified in 1.4.2 and 1.4.3 which shall be readily available for the surveyor.

1.4.1.2 The documentation shall be kept on board during the service life of the ship.

1.4.1.3 The present requirement complying with regulation II-1/3-10 of SOLAS 74/78 shall apply to oil tankers of 150 m in length and above, and to bulk carriers of 150 m in length and above, constructed with single deck, topside tanks and hopper side tanks in cargo spaces, excluding ore carriers and combination carriers:

.1 for which the building contract is placed (contracted for construction) on or after 1 July 2016;

.2 in the absence of a building contract, the keels of which are laid or which are at a similar stage of construction on or after 1 July 2017; or

.3 the delivery of which is on or after 1 July 2020.

The shipowner shall arrange the updating of the Ship Construction File (SCF — 2.11 of the Guidelines on Technical Supervision of Ships under Construction) throughout the ship's service life whenever a modification of the documentation included in SCF has taken place. Documented procedures for updating SCF shall be included within the safety management system.

1.4.2 ESP ship's file.

1.4.2.1 The **ESP** ship's file, wherein the RS reporting documents are kept, shall be part of the documentation on board (it is recommended that the file be kept on board in a separate folder/folders marked as "**ESP** ship's file") and shall consist of:

.1 RS reporting on all periodical and occasional surveys of the hull;

.2 Executive Hull Summary (Condition Evaluation Report) (form 6.3.41) (including previous reports together with those issued by ACS prior to transfer of class, if any and if applicable);

.3 thickness measurement reports.

1.4.2.2 The **ESP** ship's file shall also be kept by the shipowner and in the RS Branch Office for inservice supervision.

1.4.3 Additional documents.

1.4.3.1 The following additional documents shall be kept on board **ESP** ships:

.1 Survey Programme, as required by 1.3.1, for the previous special or intermediate survey completed;

.2 main structural plans of cargo holds and ballast tanks (for **CSR** ships these plans shall include for each structural element both the as-built and renewal thickness (t_{ren}). Any thickness for voluntary addition ($t_{vol\ add}$) shall also be clearly indicated on the plans. The midship section plan to be supplied on board the ship shall include the minimum allowable hull girder sectional properties for hold transverse section in all cargo holds);

.3 previous repair history;

.4 cargo and ballast history;

.5 usage of inert gas system and tank cleaning procedures;

.6 results of inspections performed by the shipboard personnel with the aim of:

.6.1 determination of structural general wear;

.6.2 determination of leakages in bulkheads and piping;

.6.3 checking of condition of corrosion prevention system, if any;

.7 any other information in assistance to identify the critical structural areas and/or suspect areas requiring inspection.

1.4.3.2 For oil tankers and bulk carriers subject to the requirements of 1.4.1.3, SCF, limited to the items to be retained onboard, shall be available on board.

1.4.4 Review of the documentation on board.

1.4.4.1 Prior to survey, the surveyor shall check the completeness of the documentation on board and its contents as the basis for survey.

1.4.4.2 For oil tankers and bulk carriers subject to requirements of 1.4.1.3, on completion of the survey, the RS surveyor shall verify that the update of SCF has been done whenever a modification of the documentation included in SCF has taken place.

1.4.4.2.1 For the SCF stored on board ship, the RS surveyor shall examine the information on board ship. In cases where any major event, including, but not limited to, substantial repair and conversion, or any modification to the ship structures, the RS surveyor shall also verify that the updated information is kept on board the ship. If the updating of the SCF onboard is not completed at the time of survey, upon survey completion the RS surveyor shall impose a requirement and make a record in the List of Survey's Status on necessity to confirm the SCF updating at the next periodical survey.

1.4.4.2.2 For the SCF stored on shore archive, the RS surveyor shall examine the list of information included on shore archive. In cases where any major event, including, but not limited to, substantial repair and conversion, or any modification to the ship structures, the RS surveyor shall also verify that the updated information is stored on shore archive by examining the list of information included on shore archive or kept on board the ship. In addition, the RS surveyor shall confirm that the service contract between the shipowner or the company responsible for ship's safety and the organization providing services as a shore archive, is valid. If the updating of the SCF ashore is not completed at the time of survey, upon survey completion the RS surveyor shall impose a requirement and make a record in the List of Survey's Status on necessity to confirm the SCF updating at the next periodical survey.

1.4.4.3 For oil tankers and bulk carriers subject to requirements of 1.4.1.3, on completion of the survey, the surveyor to the Register shall verify any addition and/or renewal of materials used for the construction of the hull structure are documented within SCF list of materials.

Appendix 1.4

FORM OF OWNER'S INSPECTION REPORT

Название судна:
Ship Name:

ОТЧЕТ ОБ ОСМОТРЕ, ПРОВЕДЕННОМ СУДОВЛАДЕЛЬЦЕМ — Состояние конструкций
OWNER'S INSPECTION REPORT — Structural condition

Для танка /трюма №
For Tank/Hold No.:

Марка стали:
Grade of steel:

Палуба/*Deck*:
Днище/*Bottom:*

Борт/*Side*:
Прод. переборки/*Long.bhd:*

Дефекты/ Элементы *Defects/Elements*	Трещины *Cracks*	Деформации *Buckles*	Общая коррозия *Corrosion*	Состояние покрытия *Coating condition*	Язвенная коррозия *Pitting*	Модернизация/ ремонт *Mod./Repair*
Палуба *Deck* Днище *Bottom* Борт *Side* Продольные переборки *Long. bulkheads* Поперечные переборки *Transv. bulkheads*						

Причины проведения ремонтов:
Repairs carried out due to:
Замеры толщин выполнены, дата:
Thickness measurements carried out, dates:
Общие результаты:
Results in general:
Просроченные освидетельствования:
Overdue surveys:
Невыполненные условия сохранения класса:
Outstanding conditions of class:
Замечания/*Comments*:
Дата осмотра/*Date of inspection*: Осмотр проведен/*Inspected by*: Подпись/*Signature*:

1.5 PROCEDURES FOR THICKNESS MEASUREMENTS

1.5.1 General.

1.5.1.1 The procedure for thickness measurements is specified in Annex 2 to these Rules.

1.5.1.2 The firm engaged in thickness measurements shall participate in the survey planning meeting to be held prior to survey.

1.5.1.3 The thickness measurements of structures in the areas subject to close-up surveys shall be carried out simultaneously with these close-up surveys.

1.5.1.4 In all cases the extent of the thickness measurements shall be sufficient as to represent the actual average condition.

1.5.2 Recognition of service supplier engaged in thickness measurements.

1.5.2.1 Thickness measurements on ships shall be carried out by the TM service supplier recognized by the Register. The requirements for the TM service supplier recognition are specified in Section 9 of Part I "General Provisions for Technical Supervision" of RTSCS. The possibility of obtaining permission for service suppliers recognized by another classification society (ACS) is set forth in Section 7 of Part I "General Provisions" of these Rules.

1.5.3 Reporting.

1.5.3.1 A thickness measurement report shall be prepared. The report shall contain the information on location of measurements, thicknesses measured, as well as the relevant as-built thicknesses. Furthermore, the report shall contain the date of carrying out the measurements, type of equipment used for measurements, names of personnel and their qualification. The report shall be signed by the operator who has carried out thickness measurements. The thickness measurement report shall also meet the principles stated in Annex 2 to these Rules.

1.5.3.2 The surveyor shall review the final thickness measurement report and certify the cover page with signature and stamp.

1.6 REQUIREMENT FOR ESP SURVEYS (IACS PR NO. 20)

1.6.1 This requirement applies to surveys of hull structures and piping systems in way of cargo holds and/or cargo tanks, cofferdams, cargo pump rooms, pipe tunnels, void spaces, within the cargo length area and all ballast tanks. In the case of bulk carriers, selected fuel oil tanks within the cargo length area might be part of the areas to be surveyed according to the applicable provisions of Sections 5 or 6 of this Part.

Taking into consideration, the scope of surveys and the size of ships given below, it is more effective to have more than one surveyor to examine the required spaces, holds or tanks and to provide essential support and consultation during the surveys in recommended repairs and actions required for conditions of class (classification requirements).

On **ESP** ships 20000 t deadweight and above, starting with the third special survey, at intermediate and special hull classification surveys, the survey of hull structure and piping systems to which this requirement applies shall be carried out by at least two exclusive surveyors[1]. On large bulk carriers of single side skin construction (large-capacity bulk carriers are determined as bulk carriers 100000 t deadweight and above) at the intermediate hull classification survey between 10 and 15 years of age, the survey of hull structure and piping systems to which this requirement applies shall be performed by at least two exclusive surveyors[1].

This requires that at least two exclusive surveyors attend on board at the same time to perform the required surveys.

Though each attending surveyor is not required to perform all aspects of the required survey, they are required to consult with each other and to do joint overall and close-up surveys to the extent necessary to determine the condition of the ship hull structure and piping systems to which this requirement applies. The scope of these surveys shall be sufficient for the surveyors to agree on actions required to complete the survey with respect to renewals, repairs, and other conditions. Each surveyor is required to co-sign the reporting on survey results or indicate their concurrence in an equivalent manner. The onboard attendance of two RS surveyors shall be documented in the reporting on survey results.

The following surveys may be witnessed by a single surveyor:

thickness measurements carried out in accordance with the provisions of Annex 2 to these Rules (IACS PR No.19);

tank testing;

repairs carried out in association with intermediate or special hull classification surveys, the scope of which have been agreed upon by the required two surveyors during the course of the surveys. On double or dual class ships, if a relevant agreement is available, the requirement for two exclusive surveyors may be fulfilled by having one surveyor attend from each classification society.

[1] Two hull surveyors shall be involved in such intermediate/special surveys who are competent at least in intermediate/special surveys subject to the type of survey and age of the ship, at that intermediate survey of the ship with age above 15 years old, shall be carried out by two hull surveyors competent in special surveys.

1.7 NUMBER AND LOCATIONS OF MEASUREMENTS FOR CSR BULK CARRIERS AND OIL TANKERS

1.7.1 Application.

The present requirements only apply to ships built under the IACS Common Structural Rules (**CSR** ships). For ships not built under IACS Common Structural Rules (non-**CSR** ships), the requirements for number and locations of measurements are according to Annex 2 to these Rules.

Table 1.7.1

Interpretations of requirements for the locations and number of points to be measured for CSR bulk carriers

Item	Interpretation[1]	Figure reference
Selected plates on deck plating, tank top (inner bottom plating), bottom plating and wind-and-water strakes	"Selected" means at least a single point on one out of three plates, to be chosen on representative areas of average corrosion	
All deck, tank top (inner bottom) and bottom plates and wind-and- water strakes	At least two points on each plate to be taken either at each 1/4 extremity of plate or at representative areas of average corrosion	
Transverse section	A transverse section includes all longitudinal members such as plating, longitudinals and girders at the deck, side, bottom, inner bottom and hopper side plating, longitudinal bulkheads and bottom plating in top wing tanks, etc	Locations of points are specified in Annex 2 to these Rules
All cargo hold hatch covers and coamings	Including plates and stiffeners	Locations of points are specified in Annex 2 to these Rules
Transverse section of deck plating outside line of cargo hatch openings	Two single points on each deck plate (to be taken either at each 1/4 extremity of plate or at representative areas of average corrosion) between the ship sides and hatch coamings in the transverse section concerned	
All deck plating and underdeck structure inside line of hatch openings between cargo hold hatches	"All deck plating" means at least two points on each plate to be taken either at each 1/4 extremity of plate or at representative areas of average corrosion "Underdeck structure": at each short longitudinal girder: three points for web plating (forward/middle/aft), single point for face plate, one point for web plating and one point for face plating of transverse beam in way. At each end of transverse beams, one point for web plating and one point for face plating	Areas of measurements are shown in Table 5.2.4.1 of this Part. Locations of points are specified in Annex 2 to these Rules 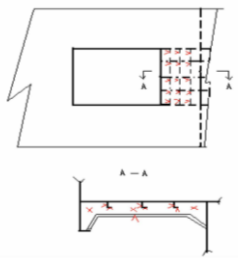

Item	Interpretation[1]	Figure reference
Selected side shell frames in cargo holds	Includes side shell frame, upper and lower end attachments and adjacent shell plating. 25 % of frames: one out of four frames shall preferably be chosen throughout the cargo hold length on each side. 50 % of frames: one out of two frames shall preferably be chosen throughout the cargo hold length on each side. "Selected frames" means at least 3 frames on each side of cargo holds	Areas of measurements are shown in Table 5.2.4.1 of this Part. Locations of points are specified in Annex 2 to these Rules N o t e . The gauging pattern for web plating shall be a three point pattern for zones A, C and D, and a two point pattern for zone B. If the web plating has intensive general corrosion then this pattern shall be expanded to a five point pattern
Transverse bulkheads in cargo holds	Includes bulkhead plating, stiffeners and girders, including internal structure of upper and lower stools, where fitted. Two selected bulkheads: one shall be the bulkhead between the two foremost cargo holds and the second may be chosen in other positions	Areas of measurements are shown in Table 5.2.4.1 of this Part. Locations of points are specified in Annex 2 to these Rules
One transverse bulkhead in each cargo hold	This means that the close-up survey and related thickness measurements shall be performed on one side of the bulkhead; the side shall be chosen based on the outcome of the overall survey of both sides. In the event of doubt, the surveyor to the Register may also require (possibly partial) close-up survey on the other side	Areas of measurements are shown in Table 5.2.4.1 of this Part. Locations of points are specified in Annex 2 to these Rules
Transverse bulkheads in one topside, hopper and double bottom ballast tank	Includes bulkhead and stiffening systems. The ballast tank shall be chosen based on the history of ballasting among those prone to have the most severe conditions	Locations of points are specified in Annex 2 to these Rules
Transverse webs in ballast tanks	Includes web plating, face plates, stiffeners and associated plating and longitudinals. One of the representative tanks of each type (i.e. topside or hopper or side tank) shall be chosen in the forward part	Areas of measurements are shown in Table 5.2.4.1 of this Part. Locations of points are specified in Annex 2 to these Rules
[1] Despite IACS interpretations the number and locations of points to be measured shall be not less than those defined in Annex 2 to these Rules.		

1.7.2 Number of measurements.

Considering the extent of thickness measurements according to the different structural elements of the ship and surveys (special, intermediate and annual), the locations of the points to be measured are given for the most important items of the structure.

Table 1.7.2

Interpretations of requirements for the locations and number of points to be measured for CSR oil tankers (double skin)

Item	Interpretation[1]	Figure reference
Selected plates	"Selected" means at least a single point on one out of three plates, to be chosen on representative areas of average corrosion.	
All deck, bottom plates and wind-and- water strakes	At least two points on each plate to be taken either at each 1/4 extremity of plate or at representative areas of average corrosion	

Item	Interpretation[1]	Figure reference
Transverse section	Measurements to be taken on all longitudinal members such as plating, longitudinals and girders at the deck, side, bottom, longitudinal bulkheads, inner bottom and hopper One point to be taken on each plate. Both web and flange to be measured on longitudinals, if applicable For tankers older than 10 years of age: within 0,1*D* (where *D* is the ship's moulded depth) of the deck and bottom at each transverse section to be measured, every longitudinal and girder shall be measured on the web and face plate, and every plate shall be measured at one point between longitudinals	Locations of points are specified in Annex 2 to these Rules
Transverse rings[2] in cargo and ballast tanks	At least two points on each plate in a staggered pattern and two points on the corresponding flange where applicable Minimum four points on the first plate below deck Additional points in way of curved parts At least one point on each of two stiffeners between stringers/longitudinal girders	Locations of points are specified in Annex 2 to these Rules
Transverse bulkheads in cargo tanks	At least two points on each plate Minimum four points on the first plate below main deck At least one point on every third stiffener to be taken between each stringer At least two points on each plate of stringers and girders, and two points on the corresponding flange Additional points in way of curved part Two points of each diaphragm plate of stools if fitted	Locations of points are specified in Annex 2 to these Rules
Transverse bulkheads in ballast tanks	At least four points on plates between stringers/longitudinal girders, or per plate if stringers/girders not fitted At least two points on each plate of stringers and girders, and two points on the corresponding flange Additional points in way of curved part At least one point on two stiffeners between each stringer/longitudinal girder	Locations of points are specified in Annex 2 to these Rules
Adjacent structural members	On adjacent structural members one point per plate and one point on every third stiffener/ longitudinal	

[1] Despite IACS interpretations the number and locations of points to be measured shall be not less than those defined in Annex 2 to these Rules.
[2] "Transverse rings" means all transverse material appearing in a cross-section of the ship's hull, in way of a double bottom floor, vertical web and deck transverse (definition from CSR).

1.7.3 Locations of measurements.

Tables 1.7.1 and 1.7.2 provide explanations and/or interpretations for the application of those requirements indicated in the present Rules, which refer to both systematic thickness measurements of items related to the global hull girder strength and specific measurements connected to close-up surveys.

1.8 ACCEPTANCE CRITERIA

1.8.1 General.

1.8.1.1 For **CSR** ships, the acceptance criteria are according to Chapter 13 of the IACS Common Structural Rules as specified in 1.8.2, 1.8.3 and 1.8.4 given below.

1.8.1.2 For non-**CSR** ships, the acceptance criteria are according to the RS Rules and/or specific IACS URs depending on ship's age and structural elements concerned, e.g IACS UR S31 for side shell frames.

1.8.2 Acceptance criteria for pitting corrosion of CSR ships.

1.8.2.1 Side structures of **CSR** bulk carriers.

If pitting intensity in an area where coating is required according to the IACS Common Structural Rules is higher than 15 % (refer to Fig. 1.2.1-3 of Annex 2 to these Rules), thickness measurements shall be performed to check the extent of pitting corrosion. The 15 % intensity is based upon pitting or grooving on only one side of the plate.

In cases where pitting is exceeding 15 %, as defined above, an area of 300 mm diameter or more (or, where this is impracticable on the frame flange or the side shell, hopper tank plating or topside tank plating attached to the side frame, equivalent rectangular area), at the most pitted part, shall be cleaned to bare metal, and the thickness measured in way of the five deepest pits within the cleaned area. The least thickness measured in way of any of these pits shall be taken as the thickness to be recorded.

The minimum acceptable remaining thickness in pits or grooves is equal to:

75 % of the as-built thickness, in the frame and end brackets webs and flanges;

70 % of the as-built thickness, in the side shell, hopper tank and topside tank plating attached to the each side frame, over a width up to 30 mm from each side of it.

1.8.2.2 Other structures of **CSR** bulk carriers and all structures of **CSR** double hull oil tankers.

For plates with pitting intensity less than 20 %, refer to Fig. 1.2.1-3 of Annex 2 to these Rules, the measured thickness t_m of any individual measurement shall meet the lesser of the following criteria:

$t_m \geq 0{,}7(t_{as\text{-}built} - t_{\text{vol add}})$, in mm;

$t_m \geq t_{ren} - 1$ mm

where $t_{as\text{-}built}$ = as-built thickness of the member, in mm;
$t_{vol\ add}$ = voluntary thickness addition; thickness, in mm, voluntarily added as the shipowner's extra margin for corrosion wastage in addition to t_C;
t_{ren} = renewal thickness; minimum allowable thickness, in mm, below which renewal of structural members shall be carried out, and defined in the IACS Common Structural Rules;
t_C = total corrosion addition, in mm, defined in the IACS Common Structural Rules;
t_m = measured thickness, in mm, on one item, i.e. average thickness on one item using the various measurements taken on this same item.

1.8.3 Acceptance criteria for edge corrosion of CSR ships.

1.8.3.1 Provided that the overall corroded height of the edge corrosion of the flange, or web in the case of flat bar stiffeners, is less than 25 %, refer to Fig. 1.2.1-4 of Annex 2 to these Rules, of the stiffener flange breadth or web height, as applicable, the measured thickness, t_m, shall meet the lesser of the following criteria:

$t_m \geq 0{,}7(t_{as\text{-}built} - t_{\text{vol add}})$, in mm;

$t_m \geq t_{ren} - 1$ mm

1.8.3.2 The average measured thickness across the breadth or height of the stiffener (including face plate and web) shall not be less than that defined in the IACS Common Structural Rules.

1.8.3.3 Plate edges at openings for manholes, lightening holes etc. may be below the minimum thickness given in the IACS Common Structural Rules provided that:

the maximum extent of the reduced plate thickness, below the minimum given in the IACS Common Structural Rules, from the opening edge is not more than 20 % of the smallest dimension of the opening and does not exceed 100 mm;

rough or uneven edges may be cropped-back provided that the maximum dimension of the opening is not increased by more than 10 % and the remaining thickness of the new edge is not less than t_{ren} – 1 mm.

1.8.4 Acceptance criteria for grooving corrosion of CSR ships.

1.8.4.1 Where the groove breadth is a maximum of 15 % of the web height, but not more than 30 mm (refer to Fig. 1.2.1-5 of Annex 2 to these Rules) the measured thickness, t_m, in the grooved area shall meet the lesser of the following criteria:

$t_m \geq 0{,}75(t_{as\text{-}built} - t_{\text{vol add}})$, in mm;

$t_m \geq t_{ren} - 0{,}5$ mm

but shall not be less than $t_m = 6$ mm.

1.8.4.2 Structural members with areas of grooving greater than those in 1.8.4.1 above shall be assessed based on the criteria for general corrosion as defined in the IACS Common Structural Rules using the average measured thickness across the plating/stiffener.

1.9 REPORTING ON HULL SURVEY OF ESP SHIPS IN ACCORDANCE WITH SECTIONS 2 — 6 OF THIS PART AND EVALUATION OF SURVEY

1.9.1 Evaluation of the RS survey reporting documents.

1.9.1.1 The data and information on the structural condition of the ship's hull collected during the survey shall be evaluated for acceptability and continued structural integrity of the ship's hull.

1.9.1.1.1 In case of oil tankers of 130 m in length and upwards (as defined in the International Convention on Load Lines (LL) in force), the ship's longitudinal strength shall be evaluated by using the thickness of structural members measured, renewed or reinforced, as appropriate, during the special survey carried out after the ship reached 10 years of age in accordance with the criteria for longitudinal strength of the ship's hull girder for oil tankers specified in 1.10.

1.9.1.1.2 For **CSR** bulk carriers, the ship's longitudinal strength shall be evaluated by using the thickness of structural members measured and renewed, as appropriate, during the special surveys carried out after the ship reached 15 years of age (or during the third special survey, if this is carried out before the ship reaches 15 years) in accordance with the criteria for longitudinal strength of the ship's hull girder for **CSR** bulk carriers specified in the IACS Common Structural Rules (as applicable depending on the date of construction).

1.9.1.1.3 The final results of evaluation of the ship's longitudinal strength required in 1.9.1.1.1 and 1.9.1.1.2, after renewal or reinforcement of structural members (if carried out as a result of initial evaluation) shall be reported as a part of the Executive Hull Summary (Condition Evaluation Report) (form 6.3.41).

1.9.2 Survey reporting documents.

1.9.2.1 When a survey is split between different RS Branch Offices, the RS survey reporting documents (Survey checklist (form 6.1.01), Ship survey statement (form 6.1.03), etc. as applicable) shall be made by each of these for each portion of the survey completed. A list of items examined and/or tested (pressure testing, thickness measurements, etc.) and an indication of whether the item has been credited, shall be made available to the next attending RS surveyor prior to continuing or completing the survey (prior to commencement of this survey).

1.9.2.2 The executive hull summary as per form 6.3.41 is drawn up at each special survey of the ship, and is a resulting report upon special survey completion. The executive hull summary as per form 6.3.41 together with the RS reporting documents on survey of the hull, systems (checklist(s) as per form 6.1.01, statements as per form 6.1.03, etc., as applicable) shall be issued by the RS surveyor to the shipowner upon completion of the special survey and placed on board the ship as a part of the **ESP** ship's file (refer to 1.4.2) for reference at future surveys. The executive hull summary shall be verified and endorsed by a duly authorized person of the RS Branch Office which performed the survey of the ship and/or drawn up this summary based on the evaluation of other RS reporting documents drawn up based on survey results.

1.9.2.3 RS survey reporting principles.

1.9.2.3.1 The results of the survey of ship hull structures and piping systems shall be stated in the relevant forms of the RS documents according to the established procedure considering the following principles:

.1 the survey reports shall be generated in the following cases:

in connection with commencement, continuation and/or completion of periodical (annual, intermediate and special) hull survey;

when structural damages/defects have been found;

when repairs, renewals or modifications have been carried out;

when condition of class (requirements) have been imposed or deleted;

.2 the purpose of reporting shall provide:

evidence that prescribed surveys have been carried out in accordance with the applicable RS rules;

documentation of surveys carried out with findings, repairs carried out and condition of class (requirements) imposed or deleted;

survey records, which shall form an auditable documentary trail. Survey results including actions taken shall be generated in a chronological sequence in order to be further verified. RS survey reporting documents shall be kept in the **ESP** ship's file required to be on board;

information for planning of future surveys;

information, which may be used as input for maintenance of the RS rules and instructions;

.3 when a survey is split between different RS Branch Offices, the RS reporting documents shall be made by each of them for each portion of the survey completed. A list of items surveyed shall be made available to the next attending RS surveyor, prior to continuing or completing the survey. Thickness measurement and tank testing carried out shall also be listed for the next RS surveyor.

1.9.2.3.2 The scope and results of survey shall be recorded in the RS reports. At least the following shall be reported by the RS surveyor(s) with identification of:

compartments where an overall survey have been carried out;

items and locations, in each ballast tank and cargo space including cargo hold hatch covers and coamings, if applicable where a close-up survey has been carried out, together with information of the means of access used;

items and locations, in each ballast tank and cargo space including cargo hold hatch covers and coamings, if applicable where thickness measurements have been carried out.

N o t e . As a minimum, the identification of locations of close-up survey and thickness measurements shall include a confirmation with description of individual structural members corresponding to the extent of requirements based on type of periodical survey and the ship's age. Where only partial survey is required (i.e. one web frame ring/one deck transverse, 25 % of shell frames, one transverse web, two selected cargo hold transverse bulkheads, etc.), the identification shall include location within each ballast tank, cargo hold/tank by reference to frame numbers;

for areas in ballast tanks and cargo holds/tanks where protective coating is found to be in GOOD condition and the scope of a close-up survey and/or thickness measurements has been specially considered, structures subject to special consideration shall be identified;

tanks tested;

for oil tankers, combination carriers and chemical tankers (as applicable): cargo piping on deck, including crude oil washing piping, and cargo and ballast piping within cargo and ballast tanks, pump rooms, pipe tunnels and void spaces where:

examination including internal examination of piping with valves and fittings;

thickness measurements;

and operational testing to working pressure have been carried out;

for bulk carriers: piping on deck, cargo and ballast piping within cargo and ballast tanks, pipe tunnels and void spaces where:

examination including internal examination of piping with valves and fittings;

thickness measurements;

and operational testing to working pressure have been carried out;

type, extent and condition of protective coating in each tank, as relevant (rated GOOD, FAIR or POOR);

structural condition of each tank/hold/compartment indicating availability and characteristics of damages and defects (such as corrosion with description of location, type and extent;

areas with substantial corrosion;

cracks/fractures with description of location and extent;

buckling with description of location and extent;

indents with description of location and characteristics, etc.);

information on repairs carried out in accordance with 3.4, Part II "Carrying Out Classification Surveys of Ships" of the Guidelines;

compartments where no structural damages/defects are found.

The RS reports may be supplemented by drawings/plans, diagrams.

Survey results shall be confirmed by photos (refer to 3.4, Part I "General provisions" of the Guidelines).

1.9.2.3.3 If based on survey results including testing for defects, assessment of technical condition, the repair of hull, piping, etc. is required, the RS surveyor shall follow the provisions of Annex 17 to the Guidelines with respect to imposing requirements.

1.9.2.3.4 For required repairs not completed at the time of survey, the RS surveyor shall impose the condition of class (requirement) with a specific time limit for the repair taking into account Annex 17 to the Guidelines. In this case, condition of class shall be sufficiently detailed by the RS surveyor with identification of each item to be repaired.

1.9.2.3.5 Thickness measurement report drawn up in accordance with Annex 2 to these Rules shall be verified and signed by the RS surveyor who supervised thickness measurements on board.

1.9.2.3.6 In cases stipulated in 1.9.1.1.1 and 1.9.1.1.2, prior to special survey completion, verification and evaluation results of longitudinal strength of the hull girder shall be made available to the RS surveyor.

1.10 CRITERIA FOR LONGITUDINAL STRENGTH OF HULL GIRDER FOR ESP OIL TANKERS OF 130 M IN LENGTH AND UPWARDS

1.10.1 General.

1.10.1.1 These criteria shall be used for the evaluation of longitudinal strength of the ship's hull girder as required by 1.9.1.1.1.

1.10.1.2 In order that ship's longitudinal strength to be evaluated can be recognized as valid, fillet welding between longitudinal internal members and hull envelopes shall be in sound condition so as to keep integrity of longitudinal internal members with hull envelopes.

1.10.2 Evaluation of longitudinal strength.

On oil tankers of 130 m in length and upwards and of over 10 years of age, the longitudinal strength of the ship's hull girder shall be evaluated in compliance with the requirements of this Chapter on the basis of the thickness measured, renewed or reinforced, as appropriate, during the survey for renewal of the Classification Certificate and Cargo Ship Safety Construction Certificate/Cargo Ship Safety Certificate. The condition of the hull girder for longitudinal strength evaluation shall be determined in accordance with the methods specified in 3.2.2 of Annex 2 to these Rules.

1.10.2.1 Calculation of transverse sectional areas of deck and bottom flanges of hull girder.

1.10.2.1.1 The transverse sectional areas of deck flange (deck plating and deck longitudinals) and bottom flange (bottom shell plating and bottom longitudinals) of the ship's hull girder shall be calculated by using the thickness measured, renewed or reinforced, as appropriate, during the survey for renewal of the Classification Certificate and Cargo Ship Safety Construction Certificate/Cargo Ship Safety Certificate.

1.10.2.1.2 If the diminution of sectional areas of either deck or bottom flange exceeds 10 % of their respective as-built area (i.e. original sectional area when the ship was built), either one of the following measures shall be taken:

.1 to renew or reinforce the deck or bottom flanges so that the actual sectional area is not less than 90 % of the as-built area; or

.2 to calculate the actual section modulus W_{act} of transverse section of the ship's hull girder by applying the calculation method in accordance with the requirements of Part II "Hull" of the Rules for the Classification and Construction, of the IACS Common Structural Rules (as applicable depending on the ship's length, date of ship construction, etc.), by using the thickness measured, renewed or reinforced, as appropriate, during the survey for renewal of the Classification Certificate and Cargo Ship Safety Construction Certificate/Cargo Ship Safety Certificate.

1.10.2.2 Requirements for transverse section modulus of hull girder.

1.10.2.2.1 The actual section modulus of transverse section of the ship's hull girder calculated in accordance with 1.10.2.1.2.2 shall satisfy either of the following provisions, as applicable:

.1 for ships constructed on or after 1 July 2002, the actual section modulus W_{act} of the transverse section of the ship's hull girder calculated in accordance with 1.10.2.1.2.2 shall not be less than the limiting value of Wreq determined by the RS rules with due regard to the MA requirements; or

.2 for ships constructed before 1 July 2002, the actual section modulus W_{act} of the transverse section of the ship's hull girder calculated in accordance with 1.10.2.1.2.2 shall meet the criteria for the minimum section modulus for ships in service required by the RS rules, with due regard to the MA requirements, provided that in no case W_{act} shall be less than the diminution limit of the minimum section modulus W_{min} as specified in Annex 2 to these Rules.

N o t e . The actual transverse section moduli of the hull girder of oil tankers calculated under 1.10.2.2.1.1 shall not be less than 90 % of the required section moduli specified in Part II "Hull" of the Rules for the Classification and Construction of Sea-Going Ships, in the IACS Common Structural Rules (as applicable depending on the ship's length, date of ship construction, etc.).

Appendix 1.10

GUIDELINES FOR EVALUATION OF LONGITUDINAL STRENGTH OF THE HULL GIRDER OF OIL TANKERS OF 130 M IN LENGTH AND UPWARDS AND OF OVER 10 YEARS OF AGE

Only one of the following items with filling in the appropriate section in the Executive Hull Summary (Condition Evaluation Report) (form 6.3.41) applies to the evaluation of longitudinal strength.

1. All ships regardless of the date of construction.

The transverse sectional areas of deck flange (deck plating and deck longitudinals) and bottom flange (bottom shell plating and bottom longitudinals) of the ship's hull girder shall be calculated by using the thickness measured, renewed or reinforced, as appropriate, during the survey for renewal of the Classification Certificate and Cargo Ship Safety Construction Certificate/Cargo Ship Safety Certificate carried out after the ship reached 10 years of age, and found that the diminution of the transverse sectional area does not exceed 10 % of the as-built area, as shown in Table 1.10.1.

Table 1.10.1

Transverse sectional area of hull girder flange

Transverse section No.	Flange	Measured, in cm^2	As-built, in cm^2	Diminution, in cm^2 (%)
1	Deck Bottom			
2	Deck Bottom			
3	Deck Bottom			

2. Ships constructed on or after 1 July 2002.

Section moduli of transverse section of the ship's hull girder shall be calculated by using the thickness of structural members measured, renewed or reinforced, as appropriate, during the survey for renewal of the Classification Certificate and Cargo Ship Safety Construction Certificate/Cargo Ship Safety Certificate carried out after the ship reached 10 years of age in accordance with 1.10.2.2.1.1, and are found to be within their diminution limits determined by the RS rules, as shown in Table 1.10.2.

Note. The actual transverse section moduli of the hull girder of oil tankers calculated under 1.10.2.2.1.1 shall not be less than 90 % of the required section moduli specified in Part II "Hull" of the Rules for the Classification and Construction of Sea-Going Ships (refer also to IACS UR S7 or S11), in the IACS Common Structural Rules, as applicable.

The W_{act} calculation shall be attached to the executive hull summary as per form 6.3.41.

Table 1.10.2

Transverse section moduli of hull girder

Transverse section No.	Flange	W_{act}[1)], in cm^3	W_{req}[2)], in cm^3	Remarks
1	Deck Bottom			
2	Deck Bottom			

Transverse section No.	Flange	W_{act}[1], in cm^3	W_{req}[2], in cm^3	Remarks
3	Deck Bottom			

[1] W_{act} — the actual section moduli of the transverse section of the ship's hull girder calculated by using the thickness of structural members measured, renewed or reinforced, as appropriate, during the survey for the renewal of the Classification Certificate and Cargo Ship Safety Construction Certificate/Cargo Ship Safety Certificate, in accordance with 1.10.2.2.1.1.
[2] W_{req} — the limiting value of section moduli of the transverse section of the ship's hull girder calculated in accordance with 1.10.2.2.1.1.

3. Ships constructed before 1 July 2002.

Section moduli of transverse section of the ship's hull girder shall be calculated by using the thickness of structural members measured, renewed or reinforced, as appropriate, during the survey for renewal of the Classification Certificate and Cargo Ship Safety Construction Certificate/Cargo Ship Safety Certificate carried out after the ship reached 10 years of age in accordance with 1.10.2.2.1.2. During this survey it shall be confirmed that the above section moduli found to meet the criteria required by the RS rules and that W_{act} is not less than 0,9W_{min} (hereinafter referred to as the [W_{min}]), as shown in Table 1.10.3.

Table 1.10.3

Transverse section moduli of hull girder

Transverse section No.	Flange	W_{act}[1], in cm^3	[W_{min}][2] in cm^3	Remarks
1	Deck Bottom			
2	Deck Bottom			
3	Deck Bottom			

[1] W_{act} — as defined in Table 1.10.2.
[2] [W_{min}] = 0,9 W_{min} — where W_{min} = minimum transverse section modulus of the hull girder, in cm^3 as required by the Rules for Construction (refer also to 4.2.1, Annex 2 to these Rules).

2 SURVEYS OF OIL TANKERS AND COMBINATION CARRIERS

2.1 GENERAL

2.1.1 Application.

2.1.1.1 The present requirements apply to all self-propelled oil tankers, as defined in 1.1, excepting double skin oil tankers.

2.1.1.2 The requirements apply to surveys of hull structures and piping systems in way of cargo tanks, pump rooms, cofferdams, pipe tunnels, void spaces within the cargo area and all ballast tanks. The requirements also apply to survey of machinery, electrical equipment and systems. These requirements are additional to the classification requirements stated in Part II "Survey Schedule and Scope".

2.1.1.3 The requirements contain the minimum extent of examination, thickness measurements and tank testing. The survey shall be extended when substantial corrosion and/or structural defects are found and include an additional close-up survey when necessary.

2.1.1.4 The survey of items of technical supervision not included into this Section shall be carried out in accordance with the applicable requirements of Part II "Survey Schedule and Scope".

2.1.1.5 If a ship is a combination carrier (ore/oil carrier, oil/bulk/ore carrier — refer to 2.2, Part I "General Provisions"), in addition to the requirements of this Section, the requirements of Sections 5 and/or 6 (as applicable) shall be met.

2.1.1.6 If a ship is an oil and chemical tanker, in addition to the requirements of this Section, the requirements of Section 4 shall be met.

2.1.2 Definitions.

Definitions used in this Section are given in 1.1.

2.1.3 Repairs.

The provisions applicable to repairs of hull structures are given in 1.2.

2.1.4 Thickness measurements and close-up surveys.

In any kind of survey, i.e. special, intermediate, annual or other surveys having the scope of the foregoing ones, thickness measurements, when required by Table 2.2.4.1, of structures in areas where close-up surveys are required, shall be carried out simultaneously with close-up surveys.

2.2 SPECIAL SURVEY

2.2.1 Schedule.

2.2.1.1 The procedure for assigning period of class during special surveys shall comply with the applicable requirements listed in 2.4, Part II "Survey Schedule and Scope".

2.2.2 Scope.

2.2.2.1 General.

2.2.2.1.1 Scope of special survey shall include the scope of annual survey, as well as examinations, tests and checks to ensure that the hull and the related piping, as defined in 2.2.2.1.3, are in satisfactory condition and meet the intended purpose for a new period of class of 5 years to be assigned, subject to proper maintenance and operation and to periodical surveys being carried out at the due dates.

2.2.2.1.2 All cargo tanks, ballast tanks, including double-bottom tanks, pump rooms, pipe tunnels, cofferdams and void spaces bounding cargo tanks, decks and outer hull shall be examined, and this examination shall be supplemented by thickness measurements and testing required by 2.2.4 and 2.2.5, to ensure that the structural integrity remains effective. The examination shall be sufficient to discover substantial corrosion, significant deformation, fractures, damages or other structural deterioration.

2.2.2.1.3 Cargo piping on deck, including crude oil washing piping, and cargo and ballast piping in the tanks and spaces defined in 2.2.2.1.2 shall be examined and operationally tested under working pressure to attending surveyor's satisfaction to ensure that their tightness and condition remain satisfactory. Special attention shall be given to ballast piping in cargo tanks and any cargo piping in ballast tanks and void spaces. At that the surveyors shall be advised on all occasions when this piping, including valves and fittings are open during repair periods and can be examined internally.

2.2.2.2 Dry dock survey.

A survey in dry dock is a part of the special survey. The overall and close-up surveys and thickness measurements, as applicable, of the lower portions of the cargo and ballast tanks shall be carried out in accordance with the applicable requirements for special survey, if not already performed. The scope of dry dock survey is specified in 2.5 of Part II "Survey Schedule and Scope".

N o t e . Lower portions of the cargo and ballast tanks are considered to be the parts below the light ballast waterline.

2.2.2.3 Tank corrosion prevention system.

2.2.2.3.1 Where provided, the condition of the corrosion prevention system of cargo and ballast tanks shall be examined.

A ballast tank shall be examined at subsequent annual intervals where:

.1 a hard protective coating was not applied from time of construction; or

.2 a soft or semihard coating has been applied; or

.3 substantial corrosion is found within the tank; or

.4 a hard protective coating is found to be in less than GOOD condition and the hard protective coating is not renewed to the satisfaction of the surveyor.

Thickness measurements shall be carried out, as deemed necessary by the RS surveyor.

2.2.2.3.2 Based on survey results the RS surveyor makes a record on the necessity of ballast tanks to be examined at annual intervals into the relevant RS reporting documents, the List of Ship's Status taking into account the requirements of 2.2.2.3.1.

2.2.3 Scope of overall and close-up surveys.

2.2.3.1 An overall survey of all tanks and spaces shall be carried out at each special survey.

2.2.3.2 The minimum requirements for close-up surveys at special survey are given in Table 2.2.3.2.

Table 2.2.3.2

Minimum requirements to close-up surveys at special survey of oil tankers, combination carriers and similar ships

Special survey No. 1 age ≤ 5	Special survey No. 2 5 < age ≤ 10	Special survey No. 3 10 < age ≤ 15	Special survey No. 4 and subsequent age > 15
(A) One web frame ring in a ballast wing tank, if any, or a cargo wing tank used primarily for water ballast. *(B)* One deck transverse in a cargo oil tank *(D)* One transverse bulkhead in a ballast tank *(D)* One transverse bulkhead in a cargo oil wing tank *(D)* One transverse bulkhead in a cargo oil centre tank	*(A)* All web frame rings in a ballast wing tank, if any, or a cargo wing tank used primarily for water ballast *(B)* One deck transverse in each of the remaining ballast tanks, if any *(B)* One deck transverse in a cargo wing tank *(B)* One deck transverse in two cargo centre tanks *(C)* Both transverse bulkheads in a wing ballast tank, if any, or a cargo wing tank used primarily for water ballast *(D)* One transverse bulkhead in each remaining ballast tank *(D)* One transverse bulkhead in a cargo oil wing tank *(D)* One transverse bulkhead in two cargo centre tanks	*(A)* All web frame rings in all ballast tanks *(A)* All web frame rings in a cargo wing tank *(A)* A minimum of 30 % of all web frame rings in each remaining cargo wing tank (refer also to Note 2) *(C)* All transverse bulkheads in all cargo and ballast tanks *(E)* A minimum of 30 % of deck and bottom transverses, including adjacent structural members in each cargo centre tank *(F)* As considered necessary by the surveyor	As special survey No. 3. Additional transverses included, as deemed necessary by the surveyor

N o t e s : 1. *(A)* to *(F)* are areas of the close-up survey, including:
(A) — complete transverse web frame ring, including adjacent structural members;
(B) — deck transverse, including adjacent deck structural members;
(C) — transverse bulkhead complete, including girder system and adjacent structural members;
(D) — transverse bulkhead lower part, including girder system and adjacent structural members;
(E) — deck and bottom transverses, including adjacent structural members;
(F) — additional complete transverse web frame ring.
2. The 30 % shall be rounded up to the next whole integer.
3. The arrangement of areas *(A)* to (F) for close-up survey of oil tankers and combination carriers is shown in Figs. 2.2.3.2-1 and 2.2.3.2-2.

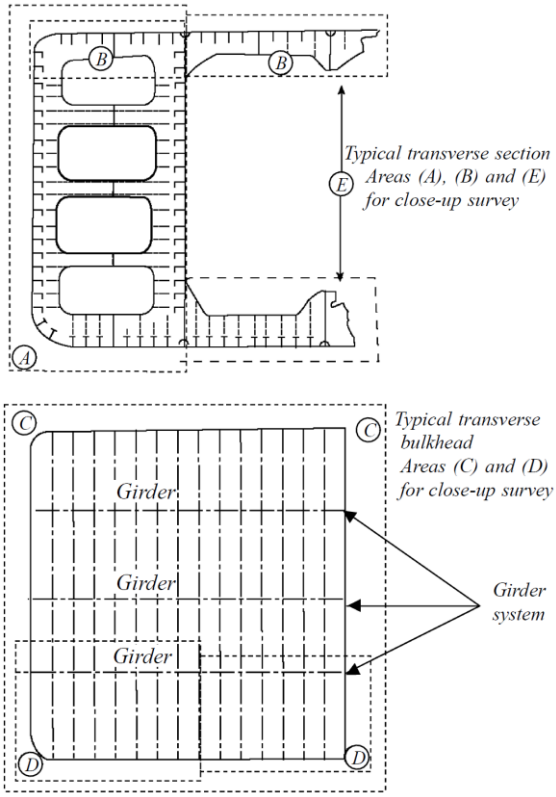

Fig. 2.2.3.2-1
Areas *(A)*, *(B)*, *(C)*, *(D)* and *(E)* for close-up surveys of combination carriers

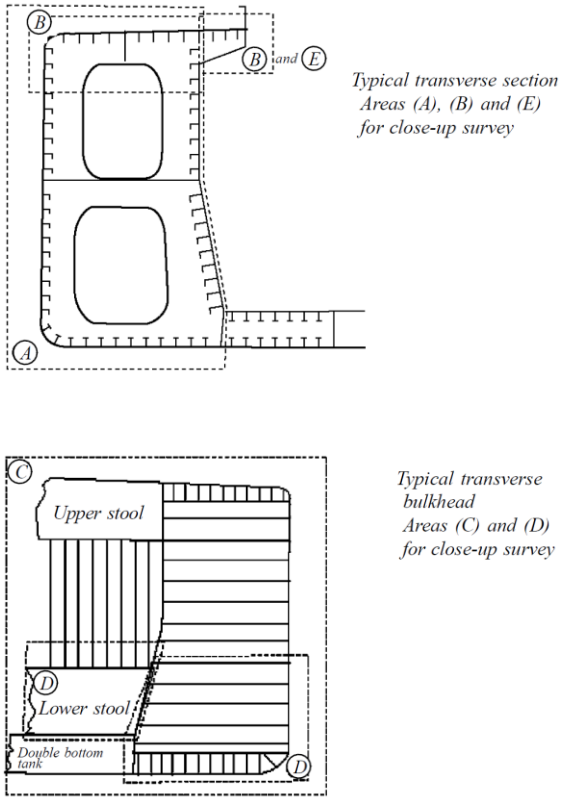

Fig. 2.2.3.2-2
Areas *(A)*, *(B)*, *(C)*, *(D)* and *(E)* for close-up surveys of combination carriers

2.2.3.3 The surveyor may extend the close-up survey, as deemed necessary, taking into account the maintenance of the tanks under survey, the condition of the corrosion protection system and also in the following cases:

.1 in tanks having structural arrangements or details, which have suffered defects in similar tanks or on similar ships according to available information;

.2 in tanks, which have structures approved with reduced scantlings due to the approved corrosion control system.

2.2.3.4 For areas in tanks where a hard coating is found in GOOD condition, the scope of close-up surveys according to Table 2.2.3.2 may be specially considered.

2.2.4 Extent of thickness measurements.

2.2.4.1 The minimum requirements for thickness measurements at special survey are given in Table 2.2.4.1.

Table 2.2.4.1

Minimum requirements to thickness measurements at special surveys of oil tankers, combination carriers and similar ships

Special survey No. 1 age ≤ 5	Special survey No. 2 5 < age ≤ 10	Special survey No. 3 10 < age ≤ 15	Special survey No. 4 and subsequent age > 15
1. Suspect areas **2.** One section of deck plating for the full beam of the ship within the cargo area (in way of a ballast tank, if any, or a cargo tank used primarily for water ballast) **4.** Measurements for general assessment and recording of corrosion pattern of those structural members subject to close-up survey according to Table 2.2.3.2	**1.** Suspect areas **2.** Within the cargo area: **.1** each deck plate **.2** one transverse section **3.** Selected wind and water strakes outside the cargo area **4.** Measurements for general assessment and recording of corrosion pattern of those structural members subject to close-up survey according to Table 2.2.3.2	**1.** Suspect areas **2.** Within the cargo area: **.1** each deck plate **.2** two transverse sections[1] **.3** all wind and water strakes **3.** Selected wind and water strakes outside the cargo area **4.** Measurements for general assessment and recording of corrosion pattern of those structural members subject to close-up survey according to Table 2.2.3.2	**1.** Suspect areas **2.** Within the cargo area: **.1** each deck plate **.2** three transverse sections[1] **.3** each bottom plate **3.** All wind and water strakes, full length **4.** Measurements for general assessment and recording of corrosion pattern of those structural members subject to close-up survey according to Table 2.2.3.2
[1] At least one section shall include a ballast tank within 0,5*L* amidships.			

2.2.4.2 Provisions for extended measurements for areas with substantial corrosion are given in Table 2.2.4.2, and may be additionally specified in the Survey Programme required in 1.3.1. These extended thickness measurements shall be carried out before the survey is credited as completed. Suspect areas identified during survey including at previous surveys shall be examined. Areas of substantial corrosion identified during current survey or at previous surveys shall have thickness measurements taken.

Table 2.2.4.2

Requirements for extent of thickness measurements at those areas of substantial corrosion. Special survey of oil tankers, combination carriers and the similar ships within the cargo tank length

Structural member	Extent of measurements	Pattern of measurements
1 Bottom structure		
1.1 Bottom plating	Minimum of 3 bays across tank including aft bay Measurements around and under all bell mouths	5 point pattern for each panel between longitudinals and webs
1.2 Bottom longitudinals	Minimum of 3 longitudinals in each bay where bottom plating is measured	3 measurements in line across flange and 3 measurements on vertical web
1.3 Bottom girders and brackets	At fore and aft transverse bulkhead bracket toes and in centre of tanks	Vertical line of single measurements on web plating with one measurement between each panel stiffener, or a minimum of three measurements. Two measurements across face flat. 5 point pattern on girder/bulkhead brackets
1.4 Bottom transverse webs	3 webs in bays where bottom plating is measured, with measurements at both ends and middle	5 point pattern over 2 m^2 area. Single measurements on face flat
1.5 Panel stiffening	Where provided	Single measurements
2 Deck structure		
2.1 Deck plating	Two bands across tank	Minimum of three measurements per plate per band

Structural member	Extent of measurements	Pattern of measurements
2.2 Deck longitudinals	Minimum of 3 longitudinals in each of two bays	3 measurements in line vertically on webs, and 2 measurements on flange (if fitted)
2.3 Deck girders and brackets	At fore and aft transverse bulkhead, bracket toes and in centre of tanks	Vertical line of single measurements on web plating with one measurement between each panel stiffener, or a minimum of three measurements. Two measurements across face flat. 5 point pattern on girder/bulkhead brackets
2.4 Deck transverse webs	Minimum of two webs with measurements at middle and both ends of span	5 point pattern over about 2 m^2 area. Single measurements on face flat
2.5 Panel stiffening	Where provided	Single measurements
3 Side shell and longitudinal bulkheads.		
3.1 Deckhead and bottom strakes, and strakes in way of stringer platforms.	Plating between each pair of longitudinals in a minimum of 3 bays	Single measurements
3.2 All other strakes.	Plating between every 3rd pair of longitudinals in same 3 bays	Single measurements
3.3 Longitudinals — deckhead and bottom strakes	Each longitudinal in same 3 bays	3 measurements across web and 1 measurement on flange
3.4 Longitudinals — all others	Every third longitudinal in same 3 bays	3 measurements across web and 1 measurement on flange
3.5 Longitudinals — brackets	Minimum of three at top, middle and bottom of tank in same 3 bays	5 points pattern over area of bracket
3.6 Web frames and transverses	3 webs with minimum of 3 locations on each web, including in way of cross tie connections	5 point pattern over about 2 m^2 area plus single measurements on web frame and cross tie face flats
4 Transverse bulkheads and swash bulkheads		
4.1 Deckhead and bottom strakes, and strakes in way of horizontal webs (shelves, platforms)	Plating between a pair of stiffeners at three locations — approx. ¼, ½ and ¾ width of tank.	5 point pattern between stiffeners over 1 m length.
4.2 All other strakes	Plating between a pair of stiffeners at middle location	Single measurements
4.3 Strakes in corrugated bulkheads	Plating for each change of scantling at centre of panel and at flange or fabricated connection	5 point pattern over about 1 m^2 of plating
4.4 Stiffeners	Minimum of three typical stiffeners	For web, 5 point pattern over span between bracket connections (2 measurements across web at each bracket connection, and one at centre of span). For flange, single measurements at each bracket toe and at centre of span
4.5 Brackets	Minimum of three at top, middle and bottom of tank	5 point pattern over areas of bracket
4.6 Deep webs and girders	Measurements at toe of bracket and at centre of span	For web, 5 point pattern over about 1 m^2 3 measurements across face flat
4.7 Stringer platforms	All stringers with measurements at both ends and middle	5 point pattern over 1 m^2 of area plus single measurements near bracket toes and on face flats

2.2.4.3 The surveyor may extend the thickness measurements, as deemed necessary.

2.2.4.4 For areas in tanks where a hard protective coating is found in GOOD condition, the extent of thickness measurements according to Table 2.2.4.1 may be specially considered.

2.2.4.5 Transverse sections shall be chosen where the largest reductions are suspected to occur or are revealed from deck plating measurements.

2.2.4.6 In cases where two or three sections shall be measured, at least one shall include a ballast tank within 0,5*L* amidships. In case of oil tankers of 130 m in length and upwards (as defined in the LL Convention in force) and of over 10 years of age, the procedure given in 3.2.2 of Annex 2 to these Rules shall be used for evaluation of the ship's longitudinal strength as required in 1.9.1.1.1.

2.2.5 Extent of tank testing.

2.2.5.1 The minimum requirements for ballast tank testing at special survey are given in 2.2.5.3 and Table 2.2.5.1. The minimum requirements for cargo tank testing at special survey are given in 2.2.5.4 and Table 2.2.5.1.

Cargo tank testing carried out by the ship's crew under the direction of the master may be accepted by the surveyor to the Register provided the following conditions are complied with:

.1 a tank testing procedure, specifying fill heights, tanks being filled and bulkheads being tested, has been submitted by the shipowner and agreed with the Register prior to the testing being carried out;

.2 the satisfactory results of the testing is recorded in the ship log book. Furthermore, there is no record of leakage, distortion or substantial corrosion that would affect the structural integrity of the tank;

.3 the tank testing has been satisfactorily carried out within special survey window not more than 3 months prior to the date of the survey on which the overall or close-up survey is completed;

.4 the internal and external condition of the tanks and associated structure are found satisfactory by the surveyor to the Register at the time of the overall and close-up survey.

Table 2.2.5.1

Minimum requirements for tank testing at special survey of oil tankers, ore/oil carriers and similar ships

Special survey No. 1 age ≤ 5	Special survey No. 2 and subsequent age > 5
All ballast tank boundaries Cargo tank boundaries facing ballast tanks, void spaces, pipe tunnels, pump rooms or cofferdams	All ballast tank boundaries All cargo tank bulkheads

2.2.5.2 The surveyor may extend the tank testing, as deemed necessary.

2.2.5.3 Boundaries of ballast tanks shall be tested with a head of liquid to the top of air pipes.

2.2.5.4 Testing of the cargo tank boundaries shall be carried out with a head of liquid to the highest point that liquid will rise under service conditions.

2.2.6 Survey of machinery, electrical equipment and systems.

2.2.6.1 Special survey shall include scope of annual survey (refer to 2.3.2.6), as well as examinations, tests and checks to confirm that the relevant machinery, electrical equipment and systems are in satisfactory condition and meet the intended purpose for the new 5-year period of class validity, provided they are properly maintained and handled, and are periodically surveyed at due dates.

2.2.6.2 Pumps, fans with their drive motors, control systems, instrumentation, safety devices and other equipment of the following systems are subject to close-up survey and operational testing:

.1 cargo and stripping systems;

.2 ballast system;

.3 automated cargo control system;

.4 inert gas system;

.5 fixed foam fire extinguishing deck system;
.6 hydrocarbon gas concentration control system in pump rooms;
.7 cargo heating systems in cargo tanks.

2.3 ANNUAL SURVEY

2.3.1 Schedule.

2.3.1.1 Annual surveys shall be held within 3 months before or after each anniversary date of the date of the initial survey after construction or the date credited for the previous special survey.

2.3.2 Scope.

2.3.2.1 General.

The survey shall consist of an examination for the purpose of ensuring, as far as practicable, that the hull, piping, machinery and electrical equipment and systems are maintained in a satisfactory condition and should take into account the service history, condition and extent of the corrosion prevention system of ballast tanks and areas identified in the RS reporting documents based on results of previous surveys.

2.3.2.2 Survey of the hull includes:

.1 examination of the hull plating and its closures, as far as practicable;

.2 examination of deck and bulkhead penetrations in watertight structures, as far as practicable.

2.3.2.3 Survey of weather decks includes:

.1 examination of all cargo tank openings including gaskets, covers, coamings and flame screens;

.2 examination of vacuum/pressure valves of vent systems, flame screens and flame-arresting fittings;

.3 examination of flame screens on air pipes of fuel and oil tanks;

.4 examination of cargo, bunker, ventilating and vent piping systems, including vent masts and headers;

.5 examination of all electrical connections of pipeline sections and their earthing.

2.3.2.4 Survey of cargo pump rooms and pipe tunnels, if any, includes:

.1 examination of all pump room bulkheads for signs of oil leakage or fractures and, in particular, the sealing arrangements of pump shafts and bulkhead penetrations;

.2 examination of the condition of all piping systems;

.3 examination of electrical connections of pipeline sections and their earthing;

.4 examination of vent systems, including an interlock of cargo pump room lighting and a check of mechanical ventilating system operation.

2.3.2.5 Survey of ballast tanks.

2.3.2.5.1 Examination of ballast tanks, when required, is carried out as a consequence of the results of special (refer to 2.2.2.3.1) or intermediate (refer to 2.4.2.2.2) survey. When considered necessary by the surveyor, or where extensive corrosion exists, thickness measurements shall be carried out. If the results of these thickness measurements indicate that substantial corrosion is found, then the extent of thickness measurements shall be increased in accordance with Table 2.2.4.2. These extended thickness measurements shall be carried out before annual survey is credited as completed. Suspect areas determined at the previous surveys shall be examined. Thickness measurements shall be carried out in the areas of substantial corrosion determined at the previous surveys.

2.3.2.6 Survey of machinery, electrical equipment and systems.

2.3.2.6.1 Subject to examination and operational testing are pumps, fans with their drive motors, control systems, instrumentation, safety devices and other equipment of the following systems:

cargo and stripping systems;
ballast systems;
automated cargo control systems;
hydrocarbon gas concentration control systems in pump rooms;
cargo heating systems in cargo tanks.

2.3.2.6.2 Examination shall be carried out to confirm that potential sources of fire in pump rooms or nearby are missing and ladders for access are in working order and that all the electrical equipment in pump rooms is in working order and properly maintained.

2.3.2.6.3 Survey of inert gas system includes:

.1 examination to confirm that all piping and their components are in fit condition and free of signs of corrosion, or gas or liquid leakage;

.2 examination to confirm that both inert gas blowers are properly operated;

.3 operational testing of a scrubber room ventilating system;

.4 check of a deck water seal for automatic filling and draining, and for being free of water carry-over;

.5 check of a non-return valve condition;

.6 operational testing of all remotely operated and automatically controlled valves including inert gas shut-off valves;

.7 operational testing of soot blowers interlocking;

.8 check, as far as practicable, including simulation of conditions, when necessary, of the following alarm and safety devices of the inert gas system:

high oxygen content of the inert gas in the inert gas supply main;

low pressure in the inert gas supply main;

low pressure in the pipeline feeding the deck water seal;

high gas temperature in the inert gas supply main;

low pressure or low velocity of water flow;

high water level in scrubber;

discontinuance of inert gas blowers operation;

failure of power supply to the automatic control system for the gas regulating valve and to continuously indicating and permanently recording devices for monitoring pressure and oxygen content in the inert gas supply main;

high gas pressure in the inert gas supply main;

.9 check of an accuracy of portable and fixed equipment for measurements of an oxygen concentration with use of a calibrating gas;

.10 check, if practicable, of the proper functioning of the inert gas system after the completion of the above checks;

.11 examination of piping and fittings of a fixed foam fire extinguishing system on deck and in pump rooms;

.12 examination and operational testing of spark arresters of exhaust systems of main, auxiliary and emergency engines, steam boilers and fire extinguishing means for silencers, if fitted.

2.4 INTERMEDIATE SURVEY

2.4.1 Schedule.

2.4.1.1 The intermediate survey shall be carried out either at or between the 2nd and 3rd annual surveys.

2.4.1.2 Those items, which are additional to the requirements of the annual survey may be surveyed either at or between the 2nd and 3rd annual surveys.

2.4.1.3 Concurrent crediting to both intermediate survey and special survey for surveys and thickness measurements of spaces are not acceptable.

2.4.2 Scope.

2.4.2.1 General.

2.4.2.1.1 In addition to the scope of the annual survey defined in 2.3, the scope of intermediate survey shall include, depending on the ship's age, the requirements of 2.4.2.2 — 2.4.2.4.

2.4.2.1.2 For weather decks, an examination, as far as practicable, of piping of cargo, crude oil washing, blow-off and gas-freeing systems, cargo vapour discharge system, gas exhausting system, overflow control system, bunker system, including and vent piping systems, including gas exhausting appliances. If upon examination there is any doubt as to the condition of the piping, the piping may be required to be pressure tested, thickness measured or both.

2.4.2.1.3 The survey of machinery, electrical equipment and systems shall be carried out in the scope according to 2.3.2.6.

2.4.2.2 Survey of oil tankers 5 — 10 years of age.

The following shall apply to oil tankers between 5 and 10 years of age, inclusive:

.1 examination of all ballast tanks.

When considered necessary by the surveyor, thickness measurements and testing shall be carried out to confirm their structural integrity;

.2 a ballast tank shall be surveyed at subsequent annual intervals where:

.2.1 a hard protective coating has not been applied from the time of construction; or

.2.2 a soft or semihard coating has been applied; or

.2.3 substantial corrosion is found in the tank; or

.2.4 a hard protective coating is found to be less than in GOOD condition and it is not renewed to the satisfaction of the surveyor.

In addition to the above requirements, suspect areas identified at previous surveys shall be examined;

.3 based on survey results the RS surveyor makes a record on the necessity of ballast tanks to be examined at annual intervals into the relevant RS reporting documents, the List of Ship's Status taking into account the requirements of 2.4.2.2.2.

2.4.2.3 Survey of oil tankers 10 — 15 years of age.

The following shall apply to oil tankers between 10 and 15 years of age, inclusive:

.1 intermediate survey, which shall be carried out in the scope of the previous special survey as required in 2.2 and 1.3.1. However, hydraulic testing of cargo and ballast tanks and the requirements for longitudinal strength evaluation of the hull girder according to 1.9.1.1.1 are not required, unless deemed necessary by the attending surveyor;

.2 the above-mentioned intermediate survey may be commenced at the second annual survey and progressed during the succeeding year with a view to completion at the third annual survey;

.3 In lieu of the requirements of 2.2.2.2, at intermediate survey the in-water survey may be performed.

2.4.2.4 Survey of oil tankers over 15 years of age.

The following shall apply to oil tankers over 15 years of age:

.1 intermediate survey, which shall be carried out in the scope of the previous special survey as required in 2.2 and 1.3.1. However, hydraulic testing of cargo and ballast tanks and the requirements for longitudinal strength evaluation of the hull girder according to 1.9.1.1.1 are not required, unless deemed necessary by the attending surveyor;

.2 intermediate survey may be commenced at the second annual survey and be progressed during the succeeding year with a view to completion at the third annual survey;

.3 survey in dry dock shall be part of the intermediate survey. The overall and close-up surveys and thickness measurements, as applicable, of the lower portions of cargo tanks and water ballast tanks shall be carried out in accordance with the applicable requirements for intermediate surveys, unless already performed. The scope of the dry dock survey is specified in 2.5, Part II "Survey Schedule and Scope".

N o t e . Lower portions of cargo and ballast tanks are considered to be the parts below the light ballast waterline.

2.5 PREPARATIONS FOR SURVEY

2.5.1 The provisions related to preparations for survey are given in 1.3.

2.6 DOCUMENTATION ON BOARD

2.6.1 The provisions related to availability and verification of documentation on board are given in 1.4.

2.7 PROCEDURES FOR THICKNESS MEASUREMENTS

2.7.1 The provisions related to the procedures for thickness measurements of hull structures are given in 1.5.

2.8 REPORTING ON HULL SURVEY AND EVALUATION OF SURVEY

2.8.1 The provisions related to drawing up the RS reporting documents and evaluation of survey results are given in 1.9, 1.10.

3 SURVEYS OF DOUBLE SKIN OIL TANKERS

3.1 GENERAL

3.1.1 Application.

3.1.1.1 The requirements apply to all self-propelled double skin oil tankers, as defined in 1.1.

3.1.1.2 The requirements apply to surveys of hull structures and piping systems in way of cargo tanks, pump rooms, cofferdams, pipe tunnels, void spaces within the cargo area and all ballast tanks. The requirements also apply to survey of machinery, electrical equipment and systems. These requirements are additional to the classification requirements stated in Part II "Survey Schedule and Scope".

3.1.1.3 The requirements contain the minimum extent of examination, thickness measurements and tank testing. The survey shall be extended when substantial corrosion and/or structural defects are found and include an additional close-up survey when necessary.

3.1.1.4 The survey of items of technical supervision not included into this Section shall be carried out in accordance with the applicable requirements of Part II "Survey Schedule and Scope".

3.1.1.5 If a ship is a combination carrier (ore/oil carrier, oil/bulk/ore carrier — refer to 2.2, Part I "General Provisions"), in addition to the requirements of this Section, the requirements of Sections 5 and/or 6 (as applicable) shall be met.

3.1.1.6 If a ship is an oil and chemical tanker, in addition to the requirements of this Section, the requirements of Section 4 shall be met.

3.1.2 Definitions.

Definitions used in this Chapter are given in 1.1.

3.1.3 Repairs.

The provisions applicable to repairs of hull structures are given in 1.2.

3.1.4 Thickness measurements and close-up surveys.

In any kind of survey, i.e. special, intermediate, annual or other surveys having the scope of the foregoing ones, thickness measurements, when required by Table 3.2.4.1, of structures in areas where close-up surveys are required, shall be carried out simultaneously with close-up surveys.

3.2 SPECIAL SURVEY

3.2.1 Schedule.

3.2.1.1 The procedure for assigning period of class during special surveys shall comply with the applicable requirements listed in 2.4, Part II "Survey Schedule and Scope".

3.2.2 Scope.

3.2.2.1 General.

3.2.2.1.1 Scope of special survey shall include the scope of annual survey, as well as examinations, tests and checks to ensure that the hull and the related piping, as defined in 3.2.2.1.3, are in satisfactory condition and meet their intended purpose for a new period of class of 5 years to be assigned, subject to proper maintenance and operation and to periodical surveys being carried out at the due dates.

3.2.2.1.2 All cargo tanks, ballast tanks including double-bottom tanks, pump rooms, pipe tunnels, cofferdams and void spaces bounding cargo tanks, decks and outer hull shall be examined, and this examination shall be supplemented by thickness measurement and testing required by 3.2.4 and 3.2.5, to ensure that the structural integrity remains effective. The examination shall be sufficient to discover substantial corrosion, significant deformation, fractures, damages or other structural deterioration.

3.2.2.1.3 Cargo piping on deck, including crude oil washing piping, and cargo and ballast piping in the tanks and spaces defined in 3.2.2.1.2 shall be examined and operationally tested under working pressure to attending surveyor's satisfaction to ensure that their tightness and condition remain satisfactory. Special attention shall be given to ballast piping in cargo tanks and any cargo piping in ballast tanks and void spaces. At that the surveyors shall be advised on all occasions when this piping, including valves and fittings are open during repair periods and can be examined internally.

3.2.2.2 Dry dock survey.

A survey in dry dock is a part of the special survey. The overall and close-up surveys and thickness measurements, as applicable, of the lower portions of the cargo and ballast tanks shall be carried out in accordance with the applicable requirements for special survey, if not already performed. The scope of dry dock survey is specified in 2.5 of Part II "Survey Schedule and Scope".

N o t e . Lower portions of the cargo and ballast tanks are considered to be the parts below the light ballast waterline.

3.2.2.3 Tank corrosion prevention system.

3.2.2.3.1 Where provided, the condition of the corrosion prevention system of cargo and ballast tanks shall be examined.

A ballast tank shall be examined at subsequent annual intervals where:

.1 a hard protective coating was not applied from time of construction; or

.2 a soft or semihard coating has been applied; or

.3 substantial corrosion is found within the tank; or

.4 a hard protective coating is found to be in less than GOOD condition and the hard protective coating is not renewed to the satisfaction of the surveyor.

Thickness measurements shall be carried out, as deemed necessary by the RS surveyor.

3.2.2.3.2 Based on survey results the RS surveyor makes a record on the necessity of ballast tanks to be examined at annual intervals into the relevant RS reporting documents, the List of Ship's Status taking into account the requirements of 3.2.2.3.1.

3.2.3 Scope of overall and close-up surveys.

3.2.3.1 An overall survey of all tanks and spaces shall be carried out at each special survey.

3.2.3.2 The minimum requirements for close-up surveys at special survey are given in Table 3.2.3.2.

Table 3.2.3.2

Minimum requirements to close-up surveys at special survey of double skin oil tankers

Special survey No. 1 age ≤ 5	Special survey No. 2 5 < age ≤ 10	Special survey No. 3 10 < age ≤ 15	Special survey No. 4 and subsequent age > 15
One web frame *(1)*, in a ballast tank (refer to Note 2) One deck transverse (deep beam), in cargo tank *(2)* One transverse bulkhead *(4)*, in ballast tank (refer to Note 2) One transverse bulkhead *(5)* in cargo centre tank One transverse bulkhead *(5)*, in cargo wing tank (refer to Note 2)	All web frames *(1)*, in a ballast tank (refer to Note 2) The knuckle area and the upper part (approximately 5 m) of one web frame in each remaining ballast tank *(6)* One deck transverse (deep beam), in two cargo tanks *(2)* One transverse bulkhead *(4)* in each ballast tank (refer to Note 2). One transverse bulkhead *(5)* in two cargo centre tanks. One transverse bulkhead *(5)*, in cargo wing tank (refer to Note 3)	All web frames *(1)*, in all ballast tanks All web frames *(7)*, including deck transverse (deep beam) and cross ties, if fitted, in cargo tank One web frame *(7)*, including deck transverse (deep beam) and cross ties, if fitted, in each remaining cargo tank All transverse bulkheads, in all cargo *(3)* and ballast *(4)* tanks	As special survey No. 3 Additional transverse areas, as deemed necessary by the surveyor

Notes: 1. Areas *(1)* — *(7)* are areas of the close-up surveys and thickness measurements (refer to Fig. 3.2.3.2):
(1) — web frame in ballast tank means vertical web in side tank, hopper web in hopper tank, floor in double bottom tank and deck transverse in double deck tank (where fitted), including adjacent structural members. In fore and aft peak tanks 1 — web frame means a complete transverse web frame ring including adjacent structural members;
(2) — deck transverse, including adjacent deck structural members (or external structure on deck in way of the tank, where applicable);
(3) — transverse bulkhead complete in cargo tank, including girder system and adjacent structural members (such as longitudinal bulkheads) and internal structures of lower and upper stools, where fitted;
(4) — transverse bulkhead complete in ballast tank, including girder system and adjacent structural members, such as longitudinal bulkheads, girders in double bottom tanks (vertical keel and bottom stringers), inner bottom plating, hopper side, connecting brackets;
(5) — transverse bulkhead lower part in cargo tank, including girder system, adjacent structural members (such as longitudinal bulkheads) and internal structure of lower stool, where fitted;
(6) — the knuckle area and the upper part (approximately 5 m), including adjacent structural members. Knuckle area is the area of the web frame around the connections of the slope hopper plating to the inner side plating and the inner bottom plating up to 2 m from the corners of the inner side and the double bottom plating;
(7) — web frame in a cargo oil tank including deck transverse (deep beam), longitudinal bulkhead structural elements and cross ties, where fitted, including adjacent structural members.
2. Ballast tank. Apart from the fore and aft peak tanks, the term "ballast tank" has the following meaning:
.1 all ballast spaces (double-deck tank , side and hopper tank, if separate from double bottom tank) located on one side, i.e. portside or starboard side, and additionally double bottom tank on portside plus starboard side, when the longitudinal central girder is not watertight and, therefore, the double-bottom tank is a unique compartment from portside to starboard side; or
.2 all ballast spaces (double bottom tank, hopper tank, side tank and double deck tank) located on one side, i.e. portside or starboard side, when the longitudinal central girder is watertight and, therefore, the portside double bottom tank separate from the starboard-side double bottom tank.
3. Where no centre cargo tanks are fitted (as in the case of centre longitudinal bulkhead), transverse bulkheads in wing cargo tanks shall be surveyed.
4. The arrangement of areas *(1)* — *(7)* for close-up survey of double skin oil tankers is shown in Fig. 3.2.3.2.

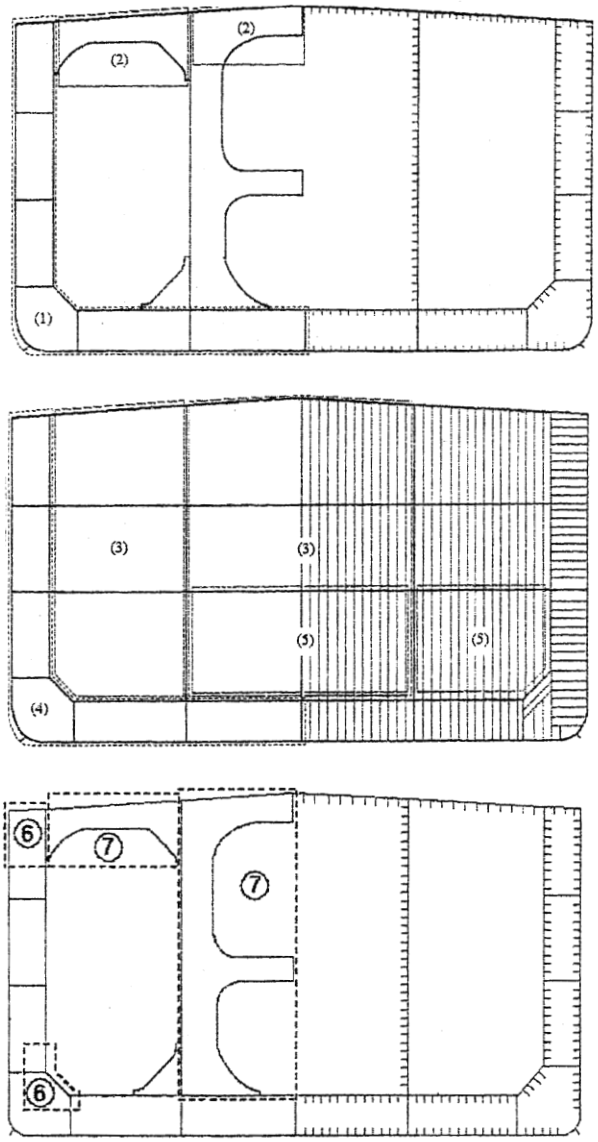

Fig. 3.2.3.2
Areas (1) - (7) for close-up surveys of double skin oil tankers

3.2.3.3 The surveyor may extend the close-up survey, as deemed necessary, taking into account the maintenance of the tanks under survey, the condition of the corrosion protection system and also in the following cases:

.1 in tanks having structural arrangements or details, which have suffered defects in similar tanks or on similar ships according to available information;

.2 in tanks, which have structures approved with reduced scantlings due to the approved corrosion control system.

3.2.3.4 For areas in tanks where a hard coating is found in GOOD condition, the scope of close-up surveys according to Table 3.2.3.2 may be specially considered.

3.2.4 Extent of thickness measurements.

3.2.4.1 The minimum requirements for thickness measurements at special survey are given in Table 3.2.4.1.

Table 3.2.4.1

Minimum requirements to thickness measurements at special surveys of double skin oil tankers

Special survey No. 1 age ≤ 5	Special survey No. 2 5 < age ≤ 10	Special survey No. 3 10 < age ≤ 15	Special survey No. 4 and subsequent age > 15
1. Suspect areas **2.** One section of deck plating for the full beam of the ship within the cargo area **3.** No requirements for plating **4.** Measurements, for general assessment and recording of corrosion pattern, of those structural members subject to a close-up survey according to Table 3.2.3.2	**1.** Suspect areas **2.** Within the cargo area: **.1** each deck plate **.2** one transverse section **3.** Selected wind and water strakes outside the cargo area **4.** Measurements, for general assessment and recording of corrosion pattern, of those structural members subject to a close-up survey according to Table 3.2.3.2	**1.** Suspect areas **2.** Within the cargo area: **.1** each deck plate **.2** two transverse sections[1] **.3** all wind and water strakes **3.** Selected wind and water strakes outside the cargo area **4.** Measurements, for general assessment and recording of corrosion pattern, of those structural members subject to a close-up survey according to Table 3.2.3.2	**1.** Suspect areas **2.** Within the cargo area: **.1** each deck plate **.2** three transverse sections[1] **.3** each bottom plate **3.** All wind and water strakes, full length **4.** Measurements, for general assessment and recording of corrosion pattern, of those structural members subject to a close-up survey according to Table 3.2.3.2
[1] At least one section is to include a ballast tank within 0,5*L* amidships.			

3.2.4.2 Provisions for extended measurements for areas with substantial corrosion are given in Table 3.2.4.2, and may be additionally specified in the Survey Programme required in 1.3.1. These extended thickness measurements shall be carried out before the survey is credited as completed. Suspect areas identified during survey including at previous surveys shall be examined. Areas of substantial corrosion identified during current survey or at previous surveys shall have thickness measurements taken. For CSR ships, the identified substantial corrosion areas are required to be also examined and additional thickness measurements shall be carried out.

Table 3.2.4.2

Requirements for extent of thickness measurements in areas of substantial corrosion within a cargo area at special surveys of double skin oil tankers

Structural element	Area of measurements	Number of measurements
1. Bottom, inner bottom and hopper structures		
1.1 Bottom, inner bottom and hopper structure plating	Minimum of three bays across double bottom tank, including aft bay Measurements around and under all bell mouths	5 point pattern for each panel between longitudinals and floors
1.2 Bottom, inner bottom and hopper structure longitudinals	Minimum of 3 longitudinals in each bay where bottom plating measured	3 measurements in line across flange and 3 measurements on vertically web
1.3 Bottom girders (bottom stringers and vertical keel) including watertight ones	At fore and aft watertight floors and in centre of tanks	Vertical line of single measurements on web plating with one measurement between each panel stiffener, or a minimum of 3 measurements
1.4 Bottom transverse webs (deep floors) including watertight ones	Three webs in bays where bottom plating measured, with measurements at both ends and middle of span	5 point pattern over 2 m^2 area
1.5 Hopper web frames	Three floors in bays where bottom plating measured	5 point pattern over 1 m^2 area Single measurements on flange

Structural element	Area of measurements	Number of measurements
1.6 Watertight or swash bulkheads in bilge tanks	Lower 1/3 of bulkhead Upper 2/3 of bulkhead Stiffeners (minimum of three)	5 point pattern over 1 m^2 area 5 point pattern over 1 m^2 area For web, 5 point pattern over span (two measurements across web at each end and one at centre of span) For flange, single measurements at each end and center of span
1.7 Panel stiffening	Where provided	Single measurements
2. Deck structures		
2.1 Deck plating	Two bands across tank	Minimum of 3 measurements per plate per band
2.2 Deck longitudinals (main framing)	Every third longitudinal in each of two bands with a minimum of one longitudinal	3 measurements in line vertically on webs, and 2 measurements on flange (if fitted)
2.3 Deck girders (carlings) and brackets (usually in cargo tanks only)	At fore and aft transverse bulkhead, bracket toes and in centre of tanks	Vertical line of single measurements on web plating with one measurement between each panel stiffener, or a minimum of 3 measurements. Two measurements across face flat. 5 point pattern on girder/bulkhead brackets
2.4 Deck transverse webs (deep beams)	Minimum of 2 webs with measurements at middle and both ends of span	5 point pattern over about 1 m^2 area. Single measurements on face flat
2.5 Vertical web and transverse bulkhead in wing ballast tanks (2 m from deck)	Minimum of two webs, and both transverse bulkheads	5 point pattern over about 1 m^2 area
2.6 Panel stiffening	Where provided	Single measurements
3. Structures in wing ballast tanks		
3.1 Side shell and longitudinal bulkhead plating:		
.1 upper strake and strakes in way of horizontal girders (side stringers, platforms, etc.) **.2** all other strakes	Plating between each pair of longitudinals in a minimum of three bays (along the tank) Plating between every third pair of longitudinals in same three bays	Single measurements Single measurements
3.2 Side shell (main framing) and longitudinal bulkhead longitudinals on:		
.1 upper strake;	Each longitudinal in same three bays	3 measurements across web and 1 measurement on flange
.2 all other strakes	Every third longitudinal in same three bays	3 measurements across web and 1 measurement on flange
3.3 End brackets of longitudinals (main framing)	Minimum of three brackets at top, middle and bottom of tank in same three bays	5 point pattern over area of bracket
3.4 Vertical webs and transverse bulkheads (excluding deckhead area):		
.1 strakes in way of horizontal girders;	Minimum of two webs and both transverse bulkheads	5 point pattern over 2 m^2 area
.2 other strakes	Minimum of two webs and both transverse bulkheads	Two measurements between each pair of vertical stiffeners
3.5 Horizontal girders	Plating on each girder in a minimum of three bays	Two measurements between each pair of longitudinal girder stiffeners
3.6 Panel stiffening	Where applicable	Single measurements
4. Longitudinal bulkheads in cargo tanks		
4.1 Deckhead and bottom strakes, and strakes in way of the horizontal stringers of transverse bulkheads	Plating between each pair of longitudinals in a minimum of three bays	Single measurements
4.2 All other strakes	Plating between every third pair of longitudinals in same three bays	Single measurements
4.3 Longitudinals on deckhead and bottom strakes	Each longitudinal in same three bays	Three measurements across web and one measurement on flange

Structural element	Area of measurements	Number of measurements
4.4 All other longitudinals	Every third longitudinal in same three bays	Three measurements across web and one measurement on flange
4.5 End brackets of longitudinals (main framing)	Minimum of three brackets at top, middle and bottom of tank in same three bays	5 point pattern over area of bracket
4.6 Web frames and cross ties	Three webs with minimum of three locations on each web, including in way of cross tie connections	5 point pattern over approximately 2 m^2 area of webs, plus single measurements on flanges of web frames and cross ties
4.7 Lower end brackets (opposite side of web frame)	Minimum of three brackets	5 point pattern over approximately 2 m^2 area of brackets, plus single measurements on bracket flanges
5. Transverse watertight and swash bulkheads in cargo tanks		
5.1 Upper and lower stools, if fitted	Transverse band within 25 mm of welded connection to inner bottom/deck plating Transverse band within 25 mm of welded connection to inner bottom/deck plating	5 point pattern between stiffeners over 1 m stool span 5 point pattern between stiffeners over 1 m stool span
5.2 Deckhead and bottom strakes, and strakes in way of horizontal webs (shelves, platforms)	Plating between a pair of stiffeners (main vertical webs) at three locations — approx. ¼, ½ and ¾ width of tank	5 point pattern between stiffeners (main vertical webs) over 1 m length
5.3 All other strakes	Plating between a pair of stiffeners (main vertical webs) at middle location	Single measurements
5.4 Strakes in corrugated bulkheads	Plating for each change of scantling at centre of panel and at flange or fabricated connection	5 point pattern over about 1 m^2 of plating
5.5 Stiffeners (main vertical webs)	Minimum of 3 typical stiffeners (main vertical webs)	For web, 5 point pattern over span between bracket connections (2 measurements across web at each bracket connection, and one at centre of span). For flange, single measurements at each bracket toe and at centre of span
5.6 Brackets	Minimum of three at top, middle and bottom of tank	5 point pattern over area of bracket
5.7 Vertical webs	Measurements at toe of bracket and at centre of span	5 point pattern over 1 m^2 of area plus single measurements near bracket toes and on face flats

3.2.4.3 The surveyor may extend the thickness measurements, as deemed necessary.

3.2.4.4 For areas in tanks where a hard protective coating is found in GOOD condition, the extent of thickness measurements according to Table 3.2.4.1 may be specially considered.

3.2.4.5 Transverse sections shall be chosen where the largest reductions are suspected to occur or are revealed from deck plating measurements.

3.2.4.6 In cases where two or three sections shall be measured, at least one shall include a ballast tank within 0,5*L*, amidships. In case of oil tankers of 130 m in length and upwards (as defined in the LL Convention in force) and of over 10 years of age, the procedure given in 3.2.2 of Annex 2 to these Rules shall be used for evaluation of the ship's longitudinal strength as required in 1.9.1.1.1.

3.2.5 Extent of tank testing.

3.2.5.1 The minimum requirements for ballast tank testing at special survey are given in 3.2.5.3 and Table 3.2.5.1. The minimum requirements for cargo tank testing at special survey are given in 3.2.5.4 and Table 3.2.5.1.

Cargo tank testing carried out by the ship's crew under the direction of the master may be accepted by the surveyor to the Register provided the following conditions are complied with:

.1 a tank testing procedure, specifying fill heights, tanks being filled and bulkheads being tested, has been submitted by the shipowner and agreed with the Register prior to the testing being carried out;

.2 the satisfactory results of the testing are recorded in the ship log book. Furthermore, there is no record of leakage, distortion or substantial corrosion that would affect the structural integrity of the tank;

.3 the tank testing has been satisfactorily carried out within special survey window not more than 3 months prior to the date of the survey on which the overall or close-up survey is completed;

.4 the internal and external condition of the tanks and associated structure are found satisfactory by the RS surveyor at the time of the overall and close-up survey.

Table 3.2.5.1

Minimum requirements for tank testing at special survey of double hull oil tankers

Special survey No. 1 age ≤ 5	Special survey No. 2 and subsequent age > 5
All ballast tank boundaries Cargo tank boundaries facing ballast tanks, void spaces, pipe tunnels, pump rooms or cofferdams	All ballast tank boundaries All cargo tank bulkheads

3.2.5.2 The surveyor may extend the tank testing as deemed necessary.

3.2.5.3 Boundaries of ballast tanks shall be tested with a head of liquid to the top of air pipes.

3.2.5.4 Boundaries of cargo tanks shall be tested to the highest point that liquid will rise under service conditions.

3.2.5.5 The tests of double bottom tanks and other spaces not intended for the carriage of liquids may be unnecessary, provided the results of their internal inspection and examination of structures forming their top are positive.

3.2.6 Survey of machinery, electrical equipment and systems.

3.2.6.1 In addition to the requirements for annual surveys (refer to 3.3.2.6), a special survey shall include examinations, tests and checks to the extent sufficient to confirm that the relevant machinery, electrical equipment and systems are in satisfactory condition and meet the intended purpose for the new 5-year period of class validity provided they are properly maintained and handled, and are periodically surveyed at due dates.

3.2.6.2 Pumps, fans with their drive motors, control systems, instrumentation, safety devices and other equipment of the following systems are subject to a close-up survey and operational testing:

.1 cargo and stripping systems;

.2 ballast system;

.3 automated cargo operation control system;

.4 inert gas system;

.5 fixed foam fire extinguishing deck system;

.6 hydrocarbon gas concentration control system in pump rooms;

.7 cargo heating system in cargo tanks.

3.3 ANNUAL SURVEY

3.3.1 Schedule.

3.3.1.1 Annual surveys shall be held within 3 months before or after the anniversary date (i.e. anniversary date ±3 months) of the ship's initial survey after its construction or the date credited for the previous special survey.

3.3.2 Scope.

3.3.2.1 General.

3.3.2.1.1 The survey shall consist of an examination for the purpose of ensuring, as far as practicable, that the hull, piping, machinery and electrical equipment and systems are maintained in a satisfactory condition and should take into account the service history, condition and extent of the corrosion prevention system of ballast tanks and areas identified in the RS reporting documents based on results of previous surveys.

3.3.2.2 Survey of the hull:

.1 examination of the hull plating and its closing appliances as far as can be seen;

.2 examination of deck and bulkhead penetrations in watertight structures as far as practicable.

3.3.2.3 Survey of the weather decks:

.1 examination of cargo tank openings including gaskets, covers, coamings and flame screens;

.2 examination of cargo tanks pressure/vacuum valves and flame screens;

.3 examination of flame screens on vents to fuel oil and lubricating oil tanks;

.4 examination of cargo, crude oil washing, blowing and degassing, cargo vapour discharge, venting, cargo overflow prevention and bunker piping systems, including vent masts and headers;

.5 examination of electrical connections of pipeline sections and their earthings.

3.3.2.4 Survey of cargo pump rooms and pipe tunnels (if any):

.1 examination of all pump room bulkheads for signs of oil leakage or fractures and, in particular, the sealing arrangements of pump shafts and bulkhead penetrations;

.2 examination of the condition of all piping systems;

.3 examination of electrical connections of pipeline sections and their earthings;

.4 examination of a ventilating system, including an interlock of cargo pump room lighting and a check of mechanical ventilating system operation.

3.3.2.5 Survey of ballast tanks.

3.3.2.5.1 Survey of ballast tanks where required as a consequence of the results of the special survey (refer to 3.2.2.3.1) or intermediate survey (refer to 3.4.2.2.2) shall be carried out. When considered necessary by the surveyor, or when extensive corrosion exists, thickness measurements shall be carried out and if the results of these thickness measurements indicate that substantial corrosion is found, the extent of thickness measurements shall be increased in accordance with Table 3.2.4.2.

These extended thickness measurments shall be carried out before the survey is credited as completed. Suspect areas identified at previous surveys shall be examined. Areas of substantial corrosion identified at previous surveys shall have thickness measurements taken. For **CSR** ships, the identified substantial corrosion areas are required to be also examined and additional thickness measurements shall be carried out.

3.3.2.6 Survey of machinery, electrical equipment and systems:

.1 pumps, fans with their drive motors, control systems, instrumentation, safety devices and other equipment of the following systems are subject to examination and operational testing:

cargo and stripping systems;

ballast system;

automated cargo operation control system;

hydrocarbon gas concentration control system in pump rooms;

cargo heating system in cargo tanks;

.2 examination to make sure that potential sources of fire in pump rooms or nearby are missing and ladders for access are in working order;

.3 confirmation that all electrical equipment in pump rooms is in a condition complying with the RS requirements and properly maintained;

.4 survey of an inert gas system:

.4.1 examination to make sure that all piping and their components are in good repair and free of signs of corrosion, or gas or liquid leakage;

.4.2 examination to make sure that both inert gas blowers properly operate;

.4.3 operational testing of a scrubber room ventilating system;

.4.4 check of a deck water seal for automatic filling and draining, and for being free of water carry-over;

.4.5 check of a non-return valve condition;

.4.6 operational testing of all remotely operated and automatically controlled valves, including inert gas shut-off valves;

.4.7 operational testing of soot blowers interlocking;

.4.8 check, as far as practicable, including simulation of conditions, when necessary, of the following alarm and safety devices of the inert gas system:

high oxygen content of the inert gas in the inert gas supply main;

low pressure in the inert gas supply main;

low pressure in the pipeline feeding the deck water seal;

high gas temperature in the inert gas supply main;

low pressure or low velocity of water flow;

high water level in scrubber;

discontinuance of inert gas blowers operation;

failure of power supply to the automatic control system for the gas regulating valve and to continuously indicating and permanently recording devices for monitoring pressure and oxygen content in the inert gas supply main;

high gas pressure in the inert gas supply main;

.4.9 check of an accuracy of portable and fixed equipment for measurements of an oxygen concentration with use of a calibrating gas;

.4.10 check, if practicable, of the proper functioning of the inert gas system after the completion of the above checks;

.5 examination of piping and fittings of a fixed foam fire extinguishing system on deck and in pump rooms;

.6 examination and operational testing of spark arresters of exhaust systems of main, auxiliary and emergency engines, steam boilers and fire extinguishing means for silencers, if fitted.

3.4 INTERMEDIATE SURVEY

3.4.1 Schedule.

3.4.1.1 The intermediate survey shall be held at or between either the 2nd or 3rd annual survey.

3.4.1.2 The items of technical supervision, of which the survey supplements the scope of the annual survey, may be surveyed either at or between the 2nd and 3rd annual survey.

3.4.1.3 Concurrent crediting to both intermediate survey and special survey for surveys and thickness measurements of spaces are not acceptable.

3.4.2 Scope.

3.4.2.1 General.

3.4.2.1.1 In addition to the scope of the annual survey, the scope of the intermediate survey shall include, depending on the ship's age, the requirements of 3.4.2.2 — 3.4.2.4 in accordance with Table 3.4.2.1.1.

Table 3.4.2.1.1

Minimum requirements to overall and close-up surveys and thickness measurements at intermediate surveys of double skin oil tankers

Age of ship during intermediate survey		
5 — 10 years of age	10 — 15 years of age	Over 15 years of age
Refer to 3.4.2.2	Refer to 3.4.2.3	Refer to 3.4.2.4

3.4.2.1.2 For weather decks, an examination, as far as applicable, of cargo, crude oil washing, blowing and degassing, cargo vapour discharge, venting, cargo overflow prevention and fuel oil piping systems, including vent masts and headers shall be carried out. If upon examination there is any doubt as to the condition of the piping, the latter may be required to be pressure tested, thickness measured or both. For CSR ships, the identified substantial corrosion areas are required to be also examined and additional thickness measurements shall be carried out.

3.4.2.1.3 The survey of machinery, electrical equipment and systems shall be carried out in the scope according to 3.3.2.6.

3.4.2.2 Double skin oil tankers 5 — 10 years of age.

The following shall apply to double skin oil tankers aged 5 — 10 years inclusive:

.1 for tanks used for salt-water ballast, an overall survey of representative tanks selected by the surveyor shall be carried out. If such inspections reveal no visible structural defects, the examination may be limited to a verification that the hard protective coating remains in a GOOD condition;

.2 a ballast tank shall be examined at subsequent annual intervals where:

.2.1 a hard protective coating has not been applied from the time of construction; or

.2.2 a soft or semihard coating has been applied; or

.2.3 substantial corrosion is found within the tank, or

.2.4 a hard protective coating is found to be in less than GOOD condition and the hard protective coating is not repaired to the satisfaction of the surveyor;

.3 In addition to the above requirements, suspect areas identified at previous surveys shall be examined;

.4 based on survey results the RS surveyor makes a record on the necessity of ballast tanks to be examined at annual intervals into the relevant RS reporting documents, the List of Ship's Status taking into account the requirements of 3.4.2.2.2.

3.4.2.3 Double skin oil tankers 10 — 15 years of age.

The following shall apply to double skin oil tankers aged 10 — 15 years inclusive:

.1 the requirements of the intermediate survey shall be to the same extent as the previous special survey according to 1.3 and 3.2. However, pressure testing of cargo and

ballast tanks and the requirements for longi-tudinal strength evaluation of the hull girder according to 1.9.1.1.1 are not required unless deemed necessary by the attending surveyor;

.2 the above intermediate survey may be commenced at the second annual survey and be progressed during the succeeding year with a view to completion at the third annual survey;

.3 at the intermediate survey, the in-water survey may be considered in lieu of the requirements of 3.2.2.2.

3.4.2.4 Double skin oil tankers over 15 years of age.

The following shall apply to oil tankers over 15 years of age:

.1 the requirements of the intermediate survey shall be to the same extent as the previous special survey according to 1.3 and 3.2. However, pressure testing of cargo and ballast tanks and the requirements for longi-tudinal strength evaluation of the hull girder according to 1.9.1.1.1 are not required, unless deemed necessary by the attending surveyor;

.2 the above intermediate survey may be commenced at the second annual survey and be progressed during the succeeding year with a view to completion at the third annual survey;

.3 a survey in dry dock shall be part of the intermediate survey specified in 3.4.2.4.1.1. The overall and close-up surveys and thickness measurements, as applicable, of the lower portions of cargo tanks and water ballast tanks shall be carried out in accordance with the applicable requirements for intermediate surveys, if not already performed. The scope of the dry dock survey is specified in 2.5 of Part II "Survey Schedule and Scope".

N o t e . Lower portions of cargo and ballast tanks are considered to be the parts below the light ballast waterline.

3.5 PREPARATIONS FOR SURVEY

3.5.1 The provisions associated with preparations for survey are stated in 1.3.

3.6 DOCUMENTATION ON BOARD

3.6.1 The provisions associated with the availability and verification of shipboard documentation on board are stated in 1.4.

3.7 PROCEDURES FOR THICKNESS MEASUREMENTS

3.7.1 The provisions associated with procedures for thickness measurements of hull structures are stated in 1.5.

3.8 REPORTING ON HULL SURVEY AND EVALUATION OF SURVEY

3.8.1 The provisions related to drawing up the RS reporting documents and evaluation of survey results are given in 1.9, 1.10.

4 SURVEYS OF CHEMICAL TANKERS

4.1 GENERAL

4.1.1 Application.

4.1.1.1 These requirements apply to all self-propelled ships with integral tanks (chemical tankers) carrying chemicals in bulk, as defined in 1.1, i.e. ships with the Certificate of Fitness for the Carriage of Dangerous Chemicals in Bulk regulated by the International Code for the Construction and Equipment of Ships Carrying Dangerous Chemicals in Bulk. If a chemical tanker is constructed with both integral and independent tanks, these requirements are applicable only to that portion of the cargo length containing integral tanks. Combination carriers for the carriage of liquefied gases and chemicals (gas carriers/ chemical tankers) with independent tanks within the hull, shall be surveyed as gas carriers.

4.1.1.2 The requirements apply to surveys of hull structures and piping systems in way of cargo tanks, pump rooms, cofferdams, pipe tunnels, void spaces within the cargo area and all ballast tanks. The requirements are not applicable to independent tanks on deck. The requirements also apply to the survey of machinery, electrical equipment and systems.

The present requirements supplement the requirements for classification survey given in Part II "Survey Schedule and Scope".

4.1.1.3 The requirements contain the minimum extent of examination, thickness measurements and tank testing. The survey shall be extended when substantial corrosion and/or structural defects are found and include an additional close-up survey when necessary.

4.1.1.4 The survey of items of technical supervision missing in this Section shall be carried out in accordance with the applicable requirements of Part II "Survey Schedule and Scope".

4.1.1.5 If a ship is an oil and chemical tanker, in addition to the requirements of this Section, the requirements of Sections 2 or 3 shall be met, as applicable.

4.1.2 Definitions.

The definitions used in this Section are given in 1.1.

4.1.3 Repairs.

The provisions applicable to repairs of hull structures are given in 1.2.

4.1.4 Thickness measurements and close-up survey.

In any kind of survey, i.e. special, intermediate, annual or other surveys having the scope of the foregoing ones, thickness measurements, when required by Table 4.2.4.1, of structures in areas where close-up surveys are required, shall be carried out simultaneously with close-up surveys.

4.2 SPECIAL SURVEY

4.2.1 Schedule.

4.2.1.1 The procedure for assigning period of class during special surveys shall comply with the applicable requirements listed in 2.4, Part II "Survey Schedule and Scope".

4.2.2 Scope.

4.2.2.1 General.

4.2.2.1.1 The special survey shall include, in addition to the requirements of the annual survey, examination, tests and checks of sufficient extent to ensure that the hull and related piping as required in 4.2.2.1.3, are in satisfactory condition and meet the intended purpose for the new period of class of five years to be assigned, subject to proper maintenance and operation and to periodical surveys being carried out at the due dates.

4.2.2.1.2 All cargo tanks, ballast tanks, including double bottom tanks, pump rooms, pipe tunnels, cofferdams and void spaces bounding cargo tanks, decks and outer hull shall be examined, and this examination shall be supplemented by thickness measurements and testing required in 4.2.4 and 4.2.5, to ensure that the structural integrity remains effective. The aim of the examination is to discover substantial corrosion, significant deformation, fractures, damages or other deterioration, that may be present.

4.2.2.1.3 Cargo piping on deck, cargo and ballast piping within the tanks and spaces specified in 4.2.2.1.2 shall be examined and operationally tested under working pressure to attending surveyor's satisfaction to ensure that tightness and condition remain satisfactory. Special attention shall be given to any ballast piping in cargo tanks and cargo piping in ballast tanks and void spaces, and the surveyors shall be advised on all occasions when this piping, including valves and fittings, are open during repair periods and can be examined internally.

4.2.2.2 Dry dock survey.

4.2.2.2.1 A survey in dry dock is a part of the special survey. The overall and close-up surveys and thickness measurements, as applicable, of the lower portions of the cargo tanks and ballast tanks shall be carried out in accordance with the applicable requirements for special surveys, if not already performed. The extent of the dry dock survey is specified in 2.5 of Part II "Survey Schedule and Scope".

Note. Lower portions of the cargo and ballast tanks are considered to be the parts below a light ballast waterline.

4.2.2.3 Tank corrosion prevention system.

4.2.2.3.1 Where provided, the condition of the corrosion prevention system of cargo and ballast tanks shall be examined.

A ballast tank shall be examined at subsequent annual intervals where:

.1 a hard protective coating has not been applied from the time of construction, or

.2 a soft or semihard coating has been applied, or

.3 substantial corrosion is found within the tank, or

.4 the hard protective coating is found to be in less than GOOD condition and the hard protective coating is not repaired to the satisfaction of the surveyor.

Thickness measurements shall be carried out, as deemed necessary by the RS surveyor.

4.2.2.3.2 Based on survey results the RS surveyor makes a record on the necessity of ballast tanks to be examined at annual intervals into the relevant RS reporting documents, the List of Ship's Status taking into account the requirements of 4.2.2.3.1.

4.2.3 Scope of overall and close-up surveys.

4.2.3.1 An overall survey of all tanks and spaces shall be carried out at each special survey.

4.2.3.2 The minimum requirements for close-up surveys at a special survey are given in Table 4.2.3.2-1 or 4.2.3.2-2. The survey of stainless steel tanks may be carried out as an overall survey supplemented by close-up survey, as deemed necessary by the surveyor.

Table 4.2.3.2-1

Minimum requirements for close-up survey at special survey of single skin chemical tankers

Special survey No. 1 age < 5	Special survey No. 2 5 < age <10	Special survey No. 3 10 < age < 15	Special survey No. 4 and subsequent age >15
(A) One web frame ring — in a ballast wing tank *(B)* One deck transverse — in a cargo tank or on deck *(D)* One transverse bulkhead — lower part in a ballast tank *(D)* One transverse bulkhead — lower part in a cargo wing tank *(D)* One transverse bulkhead — lower part in a cargo centre tank[2]	*(A)* All web frame rings — in a ballast wing tank or double bottom ballast tank[1] *(B)* One deck transverse — in each remaining ballast tank or on deck. *(B)* One deck transverse — in a cargo wing tank or on deck *(B)* One deck transverse — in two cargo centre tanks or on deck *(C)* Both transverse bulkheads — in a ballast wing tank *(D)* One transverse bulkhead — lower part in each remaining ballast tank *(D)* One transverse bulkhead — lower part in two cargo centre tanks[2] *(D)* One transverse bulkhead — lower part in a cargo wing tank	*(A)* All web frame rings — in all ballast tanks *(A)* All web frame rings — in a cargo wing tank *(A)* One web frame ring — in each remaining cargo tank *(C)* All transverse bulkheads — in all cargo tanks *(C)* All transverse bulkheads — in all ballast tanks	As special survey No. 3 Additional transverse areas as deemed necessary by the RS surveyor

[1] Ballast double hull tank: means double bottom tank plus double side tank plus double deck tank, as applicable, even if these tanks are separate.

[2] Where no centre cargo tanks are fitted (as in case of centre longitudinal bulkhead), transverse bulkheads in wing tanks shall be surveyed.

Note. *(A)* — *(D)*: are areas to be subjected to close-up surveys and thickness measurements (refer to Figs. 4.2.3.2-1 — 4.2.3.2-3):

(A) — complete transverse web frame ring including adjacent structural members;

(B) — deck transverse including adjacent deck structural members;

(C) — transverse bulkhead complete, including girder system and adjacent structural members;

(D) — transverse bulkhead lower part, including girder system and adjacent structural members.

Table 4.2.3.2-2

Minimum requirements for close-up survey at special survey of double skin chemical tankers

Special survey No. 1 age < 5	Special survey No. 2 5 < age <10	Special survey No. 3 10 < age < 15	Special survey No. 4 and subsequent age >15
(1) One web frame ring — in a ballast double hull tank[1] (2) One deck transverse — in a cargo tank or on deck (4) One transverse bulkhead — in a ballast tank[1] (5) One transverse bulkhead — in a cargo wing tank (5) One transverse bulkhead — in a cargo centre tank[2]	(1) All web frame rings — in a ballast wing tank or ballast double hull tank[1] (6) The knuckle area and the upper part (approximately 3 m) of one web frame in each remaining ballast tank (2) One deck transverse — in two cargo tanks (4) One transverse bulkhead — in each ballast tank[1] (5) One transverse bulkhead — in two cargo centre tanks[2] (5) One transverse bulkhead — in a cargo wing tank	(1) All web frame rings — in all ballast tanks (7) All web frame rings — in a cargo wing tank (7) One web frame ring — in each remaining cargo tank (3) All transverse bulkheads — in all cargo tanks (4) All transverse bulkheads — in all ballast tanks	As special survey No. 3 Additional transverse areas as deemed necessary by the surveyor to the Register

[1] Ballast double hull tank: means double bottom tank plus double side tank plus double deck tank, as applicable, even if these tanks are separate.

[2] Where no centre cargo tanks are fitted (as in the case of centre longitudinal bulkhead), transverse bulkheads in wing tanks shall be surveyed.

Note. (1), (2), (3), (4), (5), (6) and (7) are areas to be subjected to close-up surveys and thickness measurements (refer to Figs. 4.2.3.2-1 — 4.2.3.2-3):

(1) — web frame in a ballast tank means vertical web in side tank, hopper web in hopper tank, floor in double bottom tank and deck transverse in double deck tank (where fitted), including adjacent structural members. In fore and aft peak tanks web frame means a complete transverse web frame ring including adjacent structural members;

(2) — deck transverse, including adjacent deck structural members (or external structure on deck in way of the tank, where applicable);

(3) — transverse bulkhead complete in cargo tanks, including girder system, adjacent structural members (such as longitudinal bulkheads) and internal structure of lower and upper stools, where fitted;

(4) — transverse bulkhead complete in ballast tanks, including girder system and adjacent structural members, such as longitudinal bulkheads, girders in double bottom tanks, inner bottom plating, hopper side, connecting brackets;

(5) — transverse bulkhead lower part in cargo tank, including girder system, adjacent structural members (such as longitudinal bulkheads) and internal structure of lower stool, where fitted;

(6) — the knuckle area and the upper part (approximately 3 m), including adjacent structural members. Knuckle area is the area of the web frame around the connections of the slope hopper plating to the inner hull bulkhead and the inner bottom plating, up to 2 m from the corners both on the bulkhead and the double bottom;

(7) — frame in a cargo tank means deck transverse, longitudinal bulkhead structural elements and cross ties, where fitted, including adjacent structural members.

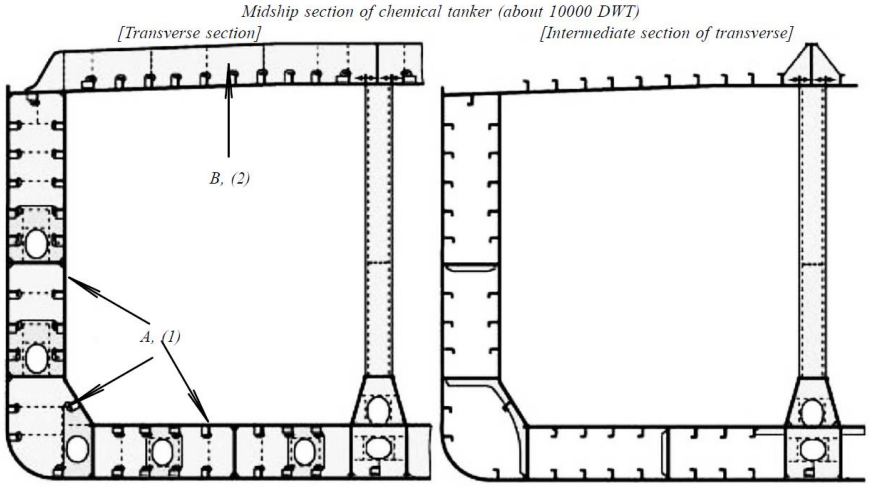

Fig. 4.2.3.2-1
Representative transverse section of chemical tanker (about 10000 DWT).
Areas A and B, (1) and (2) for close-up surveys of chemical tankers

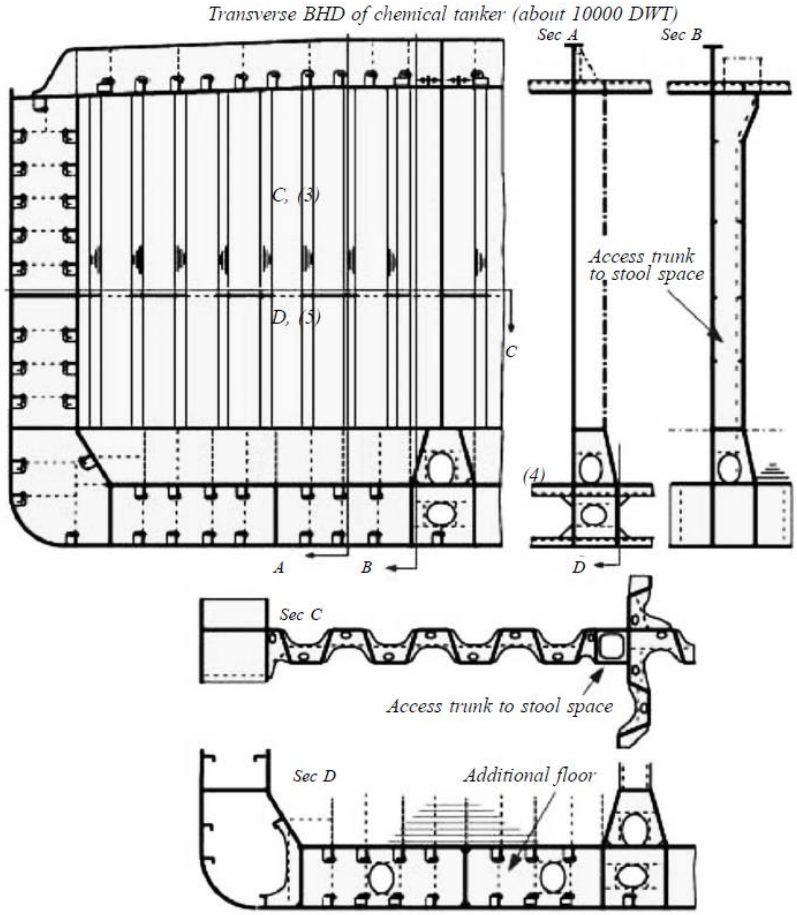

Fig. 4.2.3.2-2
Representative transverse of chemical tanker (about 10000 DWT).
Areas *C* and *D*, (3), (4) and (5) for close-up survey of chemical tanker

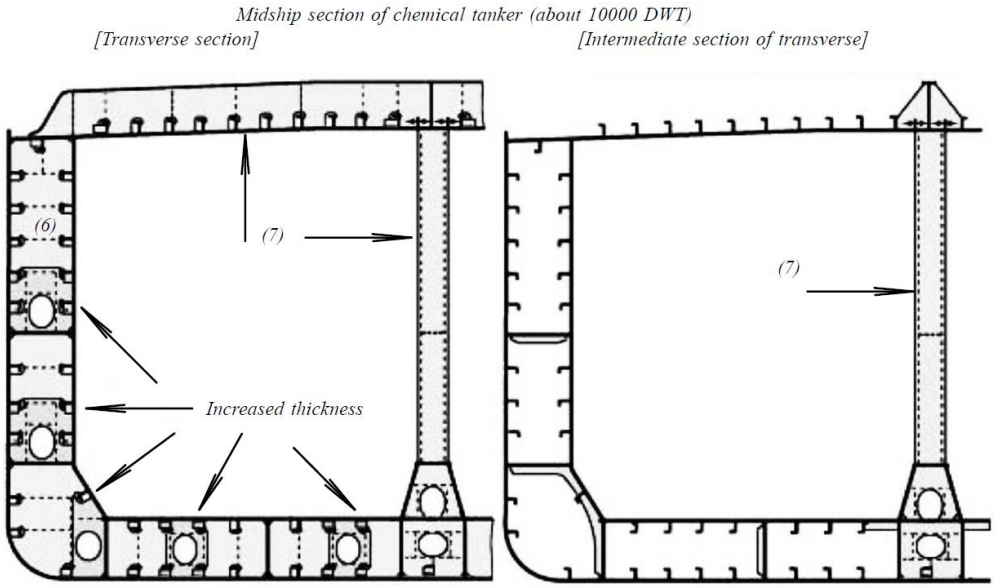

Fig. 4.2.3.2-3
Representative transverse section of chemical tanker (about 10000 DWT).
Areas (6) and (7) for close-up survey of chemical tanker

4.2.3.3 The surveyor may extend the close-up survey as deemed necessary taking into account the maintenance of the tanks under survey, the condition of the corrosion prevention system and also in the following cases:

.1 in particular, tanks having structural arrangements or details, which have suffered defects in similar tanks or on similar ships according to available information;

.2 in tanks, which have structures approved with reduced scantlings due to an approved corrosion control system.

4.2.3.4 For areas in tanks where hard protective coatings are found to be in a GOOD condition, the scope of close-up surveys according to Table 4.2.3.2-1 or 4.2.3.2-2 may be specially considered.

4.2.4 Extent of thickness measurements.

4.2.4.1 The minimum requirements for thickness measurements at special survey are given in Table 4.2.4.1. Thickness measurements of stainless steel hull structures and piping may be waived, except for clad steel plating.

Table 4.2.4.1

Minimum requirements to thickness measurements at special surveys of chemical tankers

Special survey No. 1 age ≤ 5	Special survey No. 2 5 < age ≤10	Special survey No. 3 10 < age ≤ 15	Special survey No. 4 and subsequent age >15
1. Suspect areas **2.** One section of deck plating within the cargo area (in way of a ballast or a cargo tank used primarily for water ballast) **3.** No requirements for plating measurements **4.** Measurements, for general assessment and recording of corrosion pattern, of those structural members subject to a close-up survey according to Table 4.2.3.2-1 or 4.2.3.2-2	**1.** Suspect areas **2.** Within the cargo area: **.1** each deck plate **.2** one transverse section **3.** Selected wind and water strakes outside the cargo area **4.** Measurements, for general assessment and recording of corrosion pattern, of those structural members subject to a close-up survey according to Table 4.2.3.2-1 or 4.2.3.2-2	**1.** Suspect areas **2.** Within the cargo area: **.1** each deck plate **.2** two transverse sections[1] **.3** all wind and water strakes **3.** Selected wind and water strakes outside the cargo area **4.** Measurements, for general assessment and recording of corrosion pattern, of those structural members subject to a close-up survey according to Table 4.2.3.2-1 or 4.2.3.2-2	**1.** Suspect areas **2.** Within the cargo area: **.1** each deck plate **.2** three transverse sections[1] **.3** each bottom plate **3.** All wind and water strakes, full length **4.** Measurements, for general assessment and recording of corrosion pattern, of those structural members subject to a close-up survey according to Table 4.2.3.2-1 or 4.2.3.2-2
[1] At least one section shall include a ballast tank within 0,5*L* amidships.			

4.2.4.2 Provisions for extended measurements for areas with substantial corrosion are given in Table 4.2.4.2, and may be additionally specified in the Survey Programme as required by 1.3.1. These extended thickness measurements shall be carried out before the survey is credited as completed. Suspect areas identified during survey including at previous surveys shall be examined. Areas of substantial corrosion identified during current survey or at previous surveys shall have thickness measurements taken.

Table 4.2.4.2

Requirements for extent of thickness measurements in areas of substantial corrosion within the cargo tank length at special survey of chemical tankers

Structural member	Extent of measurements	Pattern of measurements
1. Bottom, inner bottom and hopper structure		
1.1 Bottom, inner bottom and hopper structure plating	Minimum of three bays across tank, including aft spacing Measurements around and under all suction bell mouths	5-point pattern for each panel between longitudinals and floors
1.2 Bottom, inner bottom and hopper structure longitudinals	Minimum of three longitudinals in each section where bottom plating measured	Three measurements in line across the face plate and three measurements on vertical web
1.3 Central and bottom girders, including the watertight ones	At fore and aft watertight floors and in centre of tanks	Vertical line of single measurements on girder plating with one measurement between each stiffener, or a minimum of three measurements
1.4 Floors, including the watertight ones	Three floors in sections where bottom plating measured, with measurements at both ends and middle	Two measurements across flange where fitted 5-point pattern over two square metre area
1.5 Hopper structure web frame ring	Three web frame rings in sections where bottom plating measured:	5-point pattern over one square meter of plating.

Structural member	Extent of measurements	Pattern of measurements
1.6 Hopper structure transverse watertight bulkhead or swash bulkhead	lower 1/3 of bulkhead upper 2/3 of bulkhead stiffeners (minimum of three)	Single measurements on flange 5-point pattern over one square meter of plating 5-point pattern over two square meter of plating For web, 5-point pattern over span (two measurements across web at each end and one at centre of span)
1.7 Stiffeners	Where applicable	For flange, single measurements at each end and centre of span Single measurements
2. Deck structure		
2.1 Deck plating	Two transverse sections across tank	Minimum of three measurements per plate per section
2.2 Deck longitudinals	Every third longitudinal in each of two strake with a minimum of one longitudinal	Three measurements in line vertically on webs and two measurements on face plate (if fitted)
2.3 Deck girders and brackets.	At fore and aft transverse bulkhead, bracket toes and in centre of tanks	Vertical line of single measurements on girder plating with one measurement between each stiffener, or a minimum of three measurements Two measurements across flange 5-point pattern on deck girders/bulkhead brackets
2.4 Deck transverse webs	Minimum of two webs, with measurements at both ends and middle of span	5-point pattern over one square meter area Single measurements on flange
2.5 Vertical web frame rings and transverse bulkheads in wing ballast tank for double skin chemical tanker (two meters from deck)	Minimum of two web frame rings, and both transverse bulkheads	5-point pattern over one square meter area
2.6 Stiffeners	Where applicable	Single measurements
3. Side shell and longitudinal bulkheads structure		
3.1 Side shell and longitudinal bulkhead plating:		
.1 deckhead and bottom strakes, and strakes in way of horizontal girders **.2** all other strakes	Plating between each pair of longitidinals in a minimum of three sections (along the tank) Plating between every third pair of longitudinals in same three sections	Single measurement Single measurement
3.2 Side and longitudinal bulkhead longitudinals on:		
.1 deckhead and bottom strakes, and strakes in way of horizontal girders **.2** all other strakes	Each longitudinal in same three sections Every third longitudinal in same three sections	3 measurements across web and 1 measurement on face plate 3 measurements across web and 1 measurement on face plate
3.3 Longitudinals brackets	Minimum of three at top, middle and bottom of tank in same three sections	5-point pattern over area of bracket
3.4 Vertical web frame rings and transverse bulkheads of double side tanks (excluding deck area):		
.1 strakes in way of horizontal girders **.2** other strakes	Minimum of two web frame rings and both transverse bulkheads Minimum of two web frame rings and both transverse bulkheads	5-point pattern over approximately two square meter area Two measurements between each pair of vertical stiffeners
3.5 Web frame rings and cross ties for other tanks than double side tanks	Three web frame rings with minimum of three locations on each web, including in way of cross tie connections and lower end bracket	5-point pattern over approximately two square meter area of web frame rings, plus single measurements on face plate of web frame ring and cross ties
3.6 Horizontal girders	Plating on each girder in a minimum of three sections	Two measurements between each pair of longitudinal girder stiffeners

Structural member	Extent of measurements	Pattern of measurements
3.7 Stiffeners	Where applicable	Single measurements
4. Transverse watertight bulkheads and swash bulkheads		
4.1 Upper and lower stool, where fitted	Transverse strake within 25 mm of welded connection to inner bottom/deck plating Transverse strake within 25 mm of welded connection to bulkhead plating	5-point pattern between stiffeners over one meter length 5-point pattern between stiffeners over one meter length
4.2 Deckhead and bottom strakes, and strakes in way of horizontal girders	Plating between pair of stiffeners at three locations: approximately 1/4, 1/2 and 3/4 width of tank	5-point pattern over about one square meter of plating
4.3 All other strakes	Plating between pair of stiffeners at middle location	Single measurement
4.4 Strakes in corrugated bulkheads	Plating for each change of scantling, at centre of web and flange of corrugation	5-point pattern over about one square meter of plating
4.5 Stiffeners	Minimum of three typical stiffeners	For web, 5-point pattern over span between bracket connections (two measurements across web at each bracket connection and one at centre of span) For face plate, single measurements at each bracket toe and at centre of span
4.6 Brackets	Minimum of three at top, middle and bottom of tank	5-point pattern over area of bracket
4.7 Horizontal girders	All girders with measurements at both ends and middle	5-point pattern over one square meter area, plus single measurements near bracket toes and on flanges
4.8 Deep webs	Measurements at toe of bracket and at centre of span	For web, 5 point pattern over about 1 square meter. 3 measurements across flange

4.2.4.3 The surveyor may further extend the thickness measurements as deemed necessary.

4.2.4.4 For areas in tanks where a hard protective coating is found to be in a GOOD condition, the extent of thickness measurements according to Table 4.2.4.1 may be specially considered.

4.2.4.5 Transverse sections shall be chosen where the largest reductions are suspected to occur or are revealed from deck plating measurements.

4.2.4.6 In cases where two or three sections shall be measured, at least one shall include a ballast tank within 0,5*L* amidships.

4.2.5 Extent of tank testing.

4.2.5.1 The minimum requirements for ballast tank testing at special survey are given in 4.2.5.3 and Table 4.2.5.1. The minimum requirements for cargo tank testing at special survey are given in 4.2.5.4 and Table 4.2.5.1.

Cargo tank testing carried out by the ship's crew under the direction of the master may be accepted by the surveyor to the Register provided the following conditions are complied with:

.1 a tank testing procedure, specifying fill heights, tanks being filled and bulkheads being tested, has been submitted by the shipowner and agreed with the Register prior to the testing being carried out;

.2 the satisfactory results of the testing is recorded in the ship log book. Furthermore, there is no record of leakage, distortion or substantial corrosion that would affect the structural integrity of the tank;

.3 the tank testing has been satisfactorily carried out within special survey window not more than 3 months prior to the date of the survey on which the overall or close-up survey is completed;

.4 the internal and external condition of the tanks and associated structure are found satisfactory by the RS surveyor at the time of the overall and close-up survey.

Table 4.2.5.1

Minimum requirements for tank testing at special survey of chemical tankers

Special survey No. 1 age ≤ 5	Special survey No. 2 and subsequent age > 5
All ballast tank boundaries Cargo tank boundaries facing ballast tanks,void spaces, pipe tunnels, pump rooms or cofferdams	All ballast tank boundaries All cargo tank bulkheads

4.2.5.2 The surveyor may extend the tank testing as deemed necessary.

4.2.5.3 Boundaries of ballast tanks shall be tested with a head of liquid to the top of air pipes.

4.2.5.4 Boundaries of cargo tanks shall be tested to the highest point that liquid will rise under service conditions.

4.2.5.5 The tests of double bottom tanks and other spaces not designed for the carriage of liquids may be omitted, provided a satisfactory internal examination together with an examination of the tanktop is carried out.

4.2.6 On chemical tankers over 10 years of age selected steel cargo pipes outside cargo tanks and ballast pipes passing through cargo tanks shall be:

.1 thickness measured at random or selected pipe lengths to be opened for internal inspection;

.2 pressure tested to the maximum working pressure.

Special attention shall be given to cargo/slop discharge piping through ballast tanks and void spaces.

4.2.7 Survey of machinery, electrical equipment and systems.

4.2.7.1 The special survey shall include, in addition to the requirements of annual survey (refer to 4.3.2.6), examination, tests and checks of sufficient extent to ensure that the relevant machinery, electrical equipment and systems are in satisfactory condition and meet the intended purpose for the new period of class of 5 years to be assigned, subject to proper maintenance and operation and to periodical surveys being carried out at the due dates.

4.2.7.2 Pumps, fans with their drive motors, control systems, instrumentation, safety devices and other equipment of the following systems are subject to close-up survey and operational testing:

.1 cargo and stripping systems;

.2 ballast system;

.3 automated cargo control system;

.4 inert gas system;

.5 fixed foam fire extinguishing deck system;

.6 hydrocarbon gas concentration control system in pump rooms;

.7 cargo heating system in cargo tanks.

4.2.7.3 The following equipment shall be additionally surveyed in a cargo area of all chemical tankers:

.1 cargo, stripping and ballast pumps (surveyed and operationally tested), safety valves on pumps (operationally tested);

.2 pressure/vacuum valves of cargo tank venting system (opened up, surveyed and checked for functioning), flame screens (checked);

.3 a heating system of cargo tanks (surveyed and pressure tested at 1,5 times the working pressure);

.4 a drain system of pump rooms (checked and tested);

.5 all ventilating systems in the cargo area including portable fans (examined and operationally tested);

.6 gauges of a cargo level in tanks (operationally tested);

.7 liquid cargo level alarm (operationally tested);

.8 overflow control (operationally tested);

.9 pressure and temperature alarm (operationally tested);

.10 remote control of pump room systems (operationally tested);

.11 a sampling device for cargo tanks, if fitted (operationally tested);

.12 an inert gas system (operationally tested);

.13 the bow and stern emergency towing arrangements are surveyed, if fitted;

.14 electrical equipment including testing of protective means of electric motors.

4.3 ANNUAL SURVEY

4.3.1 Schedule.

4.3.1.1 Annual surveys shall be held within 3 months before or after the anniversary date (i.e. anniversary date ±3 months) of the ship's initial survey after its construction or the date credited for the previous special survey.

4.3.2 Scope.

4.3.2.1 General.

4.3.2.1.1 The survey shall consist of an examination for the purpose of ensuring, as far as practicable, that the hull, piping, machinery and electrical equipment and systems are maintained in a satisfactory condition and should take into account the service history, condition and extent of the corrosion prevention system of ballast tanks and areas identified in the RS reporting documents based on results of previous surveys.

4.3.2.2 Survey of the hull includes:

.1 examination of the hull plating and its closing appliances as far as can be seen;

.2 examination of deck and bulkhead penetrations in watertight structures as far as practicable.

4.3.2.3 Survey of the weather deck includes:

.1 examination of all cargo tank openings including gaskets, covers, coamings and flame screens;

.2 examination of vacuum/pressure valves of vent systems, flame screens and flame-arresting fittings;

.3 examination of flame screens on air pipes of fuel and oil tanks;

.4 examination of cargo, bunker, ventilating and vent piping systems, including vent masts and headers;

.5 examination of electrical connections of pipeline sections and their earthing.

4.3.2.4 Survey of cargo pump rooms and pipe tunnels, if any, includes:

.1 examination of all pump room bulkheads for signs of dangerous chemical leakage or fractures and, in particular, the sealing arrangements of pump shafts and bulkhead penetrations;

.2 examination of the condition of all piping systems;

.3 examination of electrical connections of pipeline sections and their earthings;

.4 examination of vent systems, including an interlock of cargo pump room lighting and a check of mechanical ventilating system operation.

4.3.2.5 Survey of ballast tanks.

4.3.2.5.1 Examination of ballast tanks where required as a consequence of the results of the special survey (refer to 4.2.2.3.1) or intermediate survey (refer to 4.4.2.2.1 and 4.4.2.2.2) shall be carried out. When considered necessary by the surveyor, or when extensive corrosion exists, thickness measurements shall be carried out and if the results of these thickness measurements indicate that substantial corrosion is found, the extent of thickness measurements shall be increased in accordance with Table 4.2.4.2. These extended thickness measurements shall be carried out before the survey is credited as completed.

Suspect areas identified at previous surveys shall be examined. Areas of substantial corrosion identified at previous surveys shall have thickness measurements taken.

4.3.2.6 Survey of machinery, electrical equipment and systems.

4.3.2.6.1 Pumps, fans with their drive motors, control systems, instrumentation, safety devices and other equipment of the following systems, as far as practicable, are subject to examination and operational testing:

cargo and stripping system;

ballast system;

automated cargo control system;

hydrocarbon gas concentration control system in pump rooms;

cargo heating system in cargo tanks.

4.3.2.6.2 Examination shall be carried out to confirm that potential sources of ignition in pump rooms or nearby are missing and ladders for access are in working order.

4.3.2.6.3 During examination confirmation shall be made that all the electrical equipment in pump rooms is in a condition complying with the RS requirements and properly maintained.

4.3.2.6.4 Survey of inert gas system is carried out, which includes:

.1 examination to confirm that all piping and their components are in fit condition and free of signs of corrosion, or gas or liquid leakage;

.2 examination to confirm that both inert gas blowers are properly operated;

.3 operational testing of a scrubber room ventilating system;

.4 check of a deck water seal for automatic filling and draining, and for being free of water carry-over;

.5 check of a non-return valve condition;

.6 operational testing of all remotely operated and automatically controlled valves including inert gas shut-off valves;

.7 operational testing of soot blowers interlocking;

.8 check, as far as practicable, including simulation of conditions, when necessary, of the following alarm and safety devices of the inert gas system:

high oxygen content of the inert gas in the inert gas supply main;

low pressure in the inert gas supply main;

low pressure in the pipeline feeding the deck water seal;

high gas temperature in the inert gas supply main;

low pressure or low velocity of water flow;

high water level in scrubber;

discontinuance of inert gas blowers operation;

failure of power supply to the automatic control system for the gas regulating valve and to continuously indicating and permanently recording devices for monitoring pressure and oxygen content in the inert gas supply main;

high gas pressure in the inert gas supply main;

.9 check of an accuracy of portable and fixed equipment for measurements of an oxygen concentration with use of a calibrating gas;

.10 check, if practicable, of the proper functioning of the inert gas system after the completion of the above checks.

4.3.2.6.5 Survey of piping and fittings of a fixed foam fire extinguishing system on deck and in pump rooms shall be carried out.

4.3.2.6.6 Survey and operational testing of spark arresters of exhaust systems of main, auxiliary and emergency engines, steam boilers and fire extinguishing means for silencers, if fitted, shall be carried out.

4.4 INTERMEDIATE SURVEY

4.4.1 Schedule.

4.4.1.1 The intermediate survey shall be held at or between either the 2nd or 3rd annual survey.

4.4.1.2 The items of technical supervision, additional to the requirements of the annual survey, may be surveyed either at or between the 2nd and 3rd annual survey.

4.4.1.3 Concurrent crediting to both intermediate survey and special survey for surveys and thickness measurements of spaces are not acceptable.

4.4.2 Scope.

4.4.2.1 General.

4.4.2.1.1 In addition to the scope of the annual survey in 4.3, the scope of the intermediate survey shall include, depending on the ship's age, the requirements of 4.4.2.2 — 4.4.2.4.

4.4.2.1.2 For weather decks, an examination as far as applicable of cargo, bunker, ballast, steam and vent piping systems, as well as vent masts and headers, shall be carried out. If upon examination there is any doubt as to the condition of the piping, the piping may be required to be pressure tested, thickness measured or both.

4.4.2.1.3 The survey of machinery, electrical equipment and systems shall be carried out in the scope according to 4.3.2.6.

4.4.2.2 Survey of chemical tankers between 5 and 10 years of age.

The following shall apply:

.1 an overall survey of representative ballast tanks and selected by the surveyor shall be carried out. If such survey reveals no visible structural defects, the examination may be limited to a verification that the hard protective coating remains in GOOD condition;

.2 a ballast tank shall be examined at subsequent annual intervals where:

.2.1 a hard protective coating has not been applied from the time of construction; or

.2.2 a soft or semihard coating has been applied; or

.2.3 substantial corrosion is found within the tank, or

.2.4 a hard protective coating is found to be in less than GOOD condition and it is not repaired to the satisfaction of the surveyor;

.3 suspect areas identified at previous surveys shall be examined;

.4 based on survey results the RS surveyor makes a record on the necessity of ballast tanks to be examined at annual intervals into the relevant RS reporting documents, the List of Ship's Status taking into account the requirements of 4.4.2.2.2.

4.4.2.3 Survey of chemical tankers between 10 and 15 years of age.

The following shall apply:

.1 the requirements of the intermediate survey shall be to the same extent as the previous special survey according to 1.3 and 4.2. However, pressure testing of cargo and ballast tanks is not required unless deemed necessary by the attending surveyor;

.2 the intermediate survey may be commenced at the second annual survey and be progressed during the succeeding year with a view to completion at the third annual survey;

.3 at intermediate survey, the in-water survey may be considered in lieu of the requirements of 4.2.2.2.

4.4.2.4 Survey of chemical tankers over 15 years of age.

The following shall apply:

.1 the requirements of the intermediate survey shall be to the same extent as the previous special survey according to 1.3 and 4.2. However, pressure testing of cargo and ballast tanks is not required unless deemed necessary by the attending surveyor;

.2 the intermediate survey may be commenced at the second annual survey and be progressed during the succeeding year with a view to completion at the third annual survey;

.3 a survey in dry dock shall be part of the intermediate survey. The overall and close-up surveys and thickness measurements, as applicable, of the lower portions of cargo tanks and ballast tanks shall be carried out in accordance with the applicable requirements for intermediate surveys, if not already performed. The scope of the dry dock survey is specified in 2.5 of Part II "Survey Schedule and Scope".

N o t e . Lower portions of the cargo and ballast tanks are considered to be the parts below light ballast waterline.

4.5 PREPARATIONS FOR SURVEY

4.5.1 The provisions related to preparations for survey are given in 1.3.

4.6 DOCUMENTATION ON BOARD

4.6.1 The provisions related to the availability and verification of documentation on board are given in 1.4.

4.7 PROCEDURES FOR THICKNESS MEASUREMENTS

4.7.1 The provisions related to procedures for thickness measurements of hull structures are given in 1.5.

4.8 REPORTING ON HULL SURVEYAND EVALUATION OF SURVEY

4.8.1 The provisions related to issue of drawing up the RS reporting documents and evaluation of survey results are given in 1.9.

5 SURVEYS OF BULK CARRIERS

5.1 GENERAL

5.1.1 Application.

5.1.1.1 The present requirements apply to all self-propelled bulk carriers, as defined in 1.1, other than double skin bulk carriers, as defined in 1.1.

5.1.1.2 The requirements apply to surveys of hull structures and piping systems in way of the cargo holds, cofferdams, pipe tunnels, void spaces, fuel oil tanks within the cargo length area and all ballast tanks. The present requirements are additional to the classification requirements given in Part II "Survey Schedule and Scope".

5.1.1.3 The requirements contain the minimum extent of examination, thickness measurements and tank testing. The survey shall be extended when substantial corrosion and/or structural defects are found and include additional close-up survey when necessary.

5.1.1.4 Ships, which are required to comply with 5.9 (IACS UR S19), are subject to the additional thickness measurement guidance contained in Appendix 5.9-3 with respect to the vertically corrugated transverse watertight bulkhead between cargo holds Nos. 1 and 2 for purposes of determining compliance with IACS UR S19 prior to the relevant compliance deadline stipulated in 5.11 and at subsequent intermediate surveys (for ships over 10 years of age) and special surveys for purposes of verifying continuing compliance with 5.9.

5.1.1.5 Ships, which are required to comply with 5.12 (IACS UR S31), are subject to the additional thickness measurement guidance contained in Appendix 5.12 with respect to the side shell frames and brackets prior to the relevant compliance deadline stipulated in 5.11 and at subsequent intermediate and special surveys for purposes of verifying continuing compliance with 5.12.

5.1.1.6 For bulk carriers with hybrid cargo hold arrangements, i.e., with some cargo holds of single side skin and others of double side skin, the requirements of Section 6 shall apply to cargo holds of double side skin and associated wing spaces.

5.1.1.7 Bulk carriers defined in 5.9.1 and 5.10.1 shall be surveyed to determine their compliance with the requirements of 5.9 (IACS UR S19), 5.10 (IACS UR S22) and 5.11 (IACS UR S23) by the due dates stipulated in 5.11.1.

5.1.1.8 Frames of cargo holds of bulk carriers defined in 5.12.1.1 and 5.12.1.2 shall be surveyed to determine their compliance with the requirements of 5.12 (IACS UR S31) by the due dates stipulated in 5.12.1.5 and 5.12.1.6 respectively.

5.1.1.9 Stopping and securing devices for hatch covers of cargo holds Nos. 1 and 2 of bulk carriers defined in 5.13.1.1 shall be surveyed to determine their compliance with the requirements of 5.13 (IACS UR S30) by the due dates stipulated in 5.13.1.2.

5.1.1.10 For bulk carriers with hybrid cargo hold arrangements, e.g. with some cargo holds of single side skin and others of double side skin, the requirements of Section 6 shall apply to cargo holds of double side skin.

5.1.1.11 If a ship is a combination carrier (ore/oil carrier, oil/bulk/ore carrier — refer to 2.2, Part I "General Provisions"), in addition to the requirements of this Section, the requirements of Sections 2 and/or 3 (as applicable) shall be met.

5.1.1.12 Side structures of non-**CSR** bulk carriers, which are contracted for construction on or after 1 July 1998 and intended primarily to carry dry cargo in bulk shall comply with requirements of IACS UR S12 (refer to applicable requirements in Part II "Hull" of the Rules for the Classification and Construction of Sea-Going Ships).

5.1.1.13 For non-**CSR** bulk carriers of 150 m in length and upwards contracted for construction on or after 1 July 2006, intending to carry solid bulk cargoes having a density of 1,0 t/m^3 or above, with vertically corrugated transverse watertight bulkheads, the technical

condition of vertically corrugated bulkheads shall be assessed according to the criteria defined in accordance with Appendix 3 to Part II "Hull" of the Rules for the Classification and Construction of Sea-Going Ships (IACS UR S18 starting from Rev. 7 and later). Therewith: steel renewal is required where the gauged thickness is less than t_{net} + 0,5 mm. Where the gauged thickness is within the range t_{net} + 0,5 mm and t_{net} +1 mm, coating (applied in accordance with the coating manufacturer's requirements) or annual gauging may be adopted as an alternative to steel renewal.

5.1.1.14 For non-**CSR** bulk carriers of 150 m in length and upwards, contracted for construction on or after 1 July 2006, intending to carry solid bulk cargoes having a density of 1,0 t/m^3 or above shall comply with the requirements of Appendix 4 to Part II "Hull" of the Rules for the Classification and Construction of Sea-Going Ships (IACS UR S20 starting from Rev. 4 and later).

5.1.2 Definitions.

Definitions used in this Section are given in 1.1.

5.1.3 Repairs.

The provisions applicable to repairs of hull structures are given in 1.2.

5.1.4 Thickness measurements and close-up survey.

In any kind of survey, i.e. special, intermediate, annual or other surveys having the scope of the foregoing ones, thickness measurements, when required by Table 5.2.4.1, of structures in areas where close-up surveys are required, shall be carried out simultaneously with close-up surveys.

5.2 SPECIAL SURVEY

5.2.1 Schedule.

5.2.1.1 The procedure for assigning period of class during special surveys shall comply with the applicable requirements listed in 2.4, Part II "Survey Schedule and Scope".

5.2.2 Scope.

5.2.2.1 General.

5.2.2.1.1 The special survey shall include, in addition to the requirements of the annual survey, examination, tests, and checks of sufficient extent to ensure that the hull and related piping as required in 5.2.2.1.3, are in satisfactory condition and meet the intended purpose for the new period of class of 5 years to be assigned subject to proper maintenance and operation and to periodical surveys being carried out at the due dates.

5.2.2.1.2 All cargo holds, ballast tanks, including double bottom tanks, pipe tunnels, cofferdams and void spaces bounding cargo holds, decks and outer hull shall be examined, and this examination shall be supplemented by thickness measurements and testing as required in 5.2.4 and 5.2.5, to ensure that the structural integrity remains effective. The aim of the examination is to discover substantial corrosion, significant deformation, fractures, damages or other structural deterioration, that may be present.

5.2.2.1.3 All piping systems within the above spaces shall be examined and operationally tested under working pressure to attending surveyor's satisfaction to ensure that tightness and condition remain satisfactory.

5.2.2.1.4 The scope of survey of ballast tanks converted to void spaces shall be specially considered in relation to the requirements for ballast tanks.

5.2.2.2 Dry dock survey.

5.2.2.2.1 A survey in dry dock shall be a part of the special survey. The overall and close-up surveys and thickness measurements, as applicable, of the lower portions of the cargo holds and ballast tanks shall be carried out in accordance with the applicable requirements for special surveys, if not already performed. The scope of dry dock survey is given in 2.5 of Part II "Survey Schedule and Scope".

Note. Lower portions of the cargo holds and ballast tanks are considered to be the parts of the hull below light ballast waterline.

5.2.2.3 Tank corrosion prevention system.

5.2.2.3.1 The condition of the corrosion prevention system of ballast tanks shall be examined.

For ballast tanks, excluding double bottom tanks, where a hard protective coating is found in POOR condition and it is not renewed, where a soft or semihard coating has been applied, or where a hard protective coating has not been applied from the time of construction, the tanks in question shall be examined at subsequent annual intervals. Thickness measurements shall be carried out as deemed necessary by the RS surveyor.

For double bottom ballast tanks, where a hard protective coating is found in POOR condition and it is not renewed, where a soft or semihard coating has been applied, or where a hard protective coating was not applied from the time of construction, the tanks in question may be examined at subsequent annual intervals. When considered necessary by the RS surveyor, or extensive corrosion exists, thickness measurements shall be carried out.

5.2.2.3.2 Where a hard protective coating is provided in cargo holds and is found in GOOD condition, the scope of close-up surveys and thickness measurements may be specially considered.

5.2.2.3.3 Based on survey results the RS surveyor makes a record on the necessity of ballast tanks to be examined at annual intervals into the relevant RS reporting documents, the List of Ship's Status taking into account the requirements of 5.2.2.3.1.

5.2.2.4 Hatch covers and coamings.

The hatch covers and comings shall be surveyed as follows.

5.2.2.4.1 A thorough inspection of the items listed in 5.3.2.3 shall be carried out.

5.2.2.4.2 Satisfactory operation of all mechanically operated hatch covers shall be checked, including:

.1 stowage and securing in open condition;

.2 proper fit and efficiency of sealing in closed condition;

.3 operational testing of hydraulic and power components, wires, chains and link drives.

5.2.2.4.3 The effectiveness of sealing arrangements of all hatch covers shall be checked by hose testing or equivalent.

5.2.2.4.4 Close-up survey and thickness measurement[1] of hatch cover and coaming plating and stiffeners shall be carried out as given in Tables 5.2.3.2 and 5.2.4.1.

5.2.3 Scope of overall and close-up surveys.

5.2.3.1 An overall survey of all tanks and spaces shall be carried out at each special survey. Fuel oil tanks in the cargo length area shall be surveyed in accordance with Table 5.2.3.1.

Table 5.2.3.1

Overall survey of fuel oil tanks in the cargo area at special surveys of bulk carriers

Special survey No. 1 Age ≤ 5	Special survey No. 2 5 < age ≤ 10	Special survey No. 3 10<age ≤ 15	Special survey No. 4 and subsequent Age > 15
None	One	Two	Half, minimum two
N o t e s :1. These requirements apply to tanks of integral (structural) type. 2. If a selection of tanks is accepted to be examined, then different tanks shall be examined at each special survey on a rotational basis. 3. Peak tanks (all uses) shall be subject to internal examination at each special survey. 4. At special survey No.3 and subsequent special surveys, one deep tank for fuel oil in the cargo area shall be included, if fitted.			

5.2.3.2 The minimum requirements for close-up surveys at special survey are given in Table 5.2.3.2.

Table 5.2.3.2

Minimum requirements to close-up survey at special hull surveys of bulk carriers

Special survey No. 1 age ≤ 5	Special survey No. 2 5 < age ≤ 10	Special survey No. 3 10<age ≤ 15	Special survey No. 4 and subsequent age > 15
(A) 25 % of shell frames in the forward cargo hold at representative positions *(A)* Selected frames in remaining cargo holds *(B)* One transverse web with associated plating and longitudinals in two representative water ballast tanks of each type (i.e. topside or hopper side tank) *(C)* Two selected cargo hold transverse bulkheads, including internal structure	*(A)* All shell frames in the forward cargo hold and 25 % of shell frames in each of the remaining cargo holds, including upper and lower end attachments and adjacent shell plating. For bulk carriers 100000 deadweight and above, all shell frames in the foremost cargo hold and 50 % of shell frames in each of the remaining cargo holds, including upper and lower end attachments and	*(A)* All shell frames in the forward and one other selected cargo hold and 50 % of frames in each of the remaining cargo holds, including upper and lower end attachments and adjacent shell plating *(B)* All transverse webs with associated plating and longitudinals in each ballast tank *(B)* All transverse bulkheads in ballast	*(A)* All shell frames in all cargo holds, including upper and lower end attachments and adjacent shell plating Areas *(B)* — *(E)* as for special survey No. 3

[1] Subject to cargo hold hatch covers of approved design which structurally have no access to the internals, close-up survey/ thickness measurement shall be done of accessible parts of hatch covers structures.

Special survey No. 1 age ≤ 5	Special survey No. 2 5 < age ≤ 10	Special survey No. 3 10<age ≤ 15	Special survey No. 4 and subsequent age > 15
of upper and lower stools, where fitted *(D)* All cargo hold hatch covers and coamings (plating and stiffeners)	adjacent shell plating *(B)* One transverse web with associated plating and longitudinals in each ballast tank *(B)* Forward and aft transverse bulkhead in one ballast tank, including stiffening system. *(C)* All cargo hold transverse bulkheads, including internal structure of upper and lower stools, where fitted *(D)* All cargo hold hatch covers and coamings (plating and stiffeners) *(E)* All deck plating and underdeck structure inside line of hatch openings between all cargo hold hatches	tanks, including stiffening system Areas *(C)*, *(D)* and *(E)* as for special survey No. 2	

Notes: 1. *(A)* — *(E)* — areas of close-up survey, including:
(A) — cargo hold transverse frames;
(B) — transverse web frame or watertight transverse bulkhead in ballast tanks;
(C) — cargo hold transverse bulkheads plating, stiffeners and girders;
(D) — cargo hold hatch covers and coamings. Subject to cargo hold hatch covers of approved design which structurally have no access to the internals, close-up survey/thickness measurement shall be done of accessible parts of hatch covers structures;
(E) — deck plating and underdeck structure inside line of hatch openings between cargo hold hatches.
2. Refer to sketches in Fig. 5.2.3.2-1 for the areas corresponding to *(A)* — *(E)* at close-up survey of bulk and combination carriers.
3. Also refer to sketch in Fig. 5.2.3.2-2 for areas of side shell frames in cargo holds (for ships covered by IACS UR S31).
4. Criteria for evaluating the condition of hatch covers and coamings of cargo holds (for ships constructed on or after 1 January 2004) are given in Appendix 5.2-1.
5. Close-up survey of transverse bulkheads shall be carried at four levels, sketches of which are given in Figs. 5.2.3.2-3 and 5.2.3.2-4:
level *a* — immediately above the inner bottom and immediately above the line of gussets (if fitted) and shedders for ships without lower stool;
level *b* — immediately above and below the lower stool shelf plate (for those ships fitted with lower stools), and immediately above the line of shedder plates;
level *c* — about mid-height of the bulkhead;
level *d* — immediately below the upper deck plating and immediately adjacent to the upper wing tank, and immediately below the upper stool shelf plate (for those ships with upper stools), or immediately below the topside tanks.

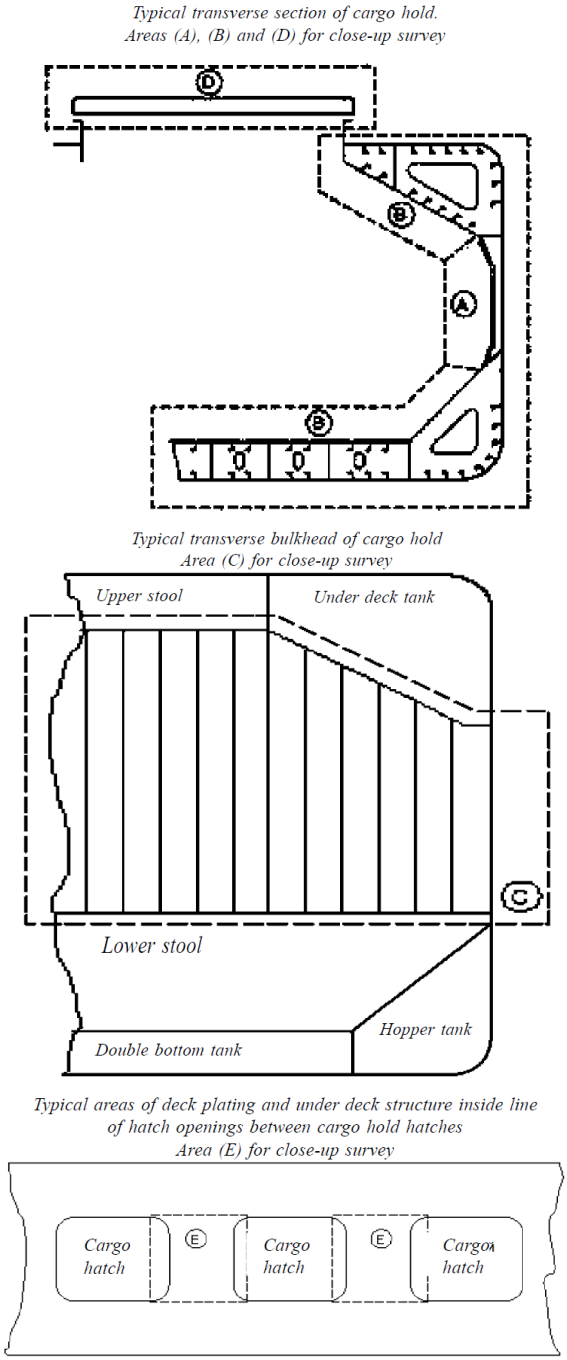

Fig. 5.2.3.2-1
Areas *(A)*, *(B)*, *(C)*, *(D)* and *(E)* for close-up surveys of bulk carriers

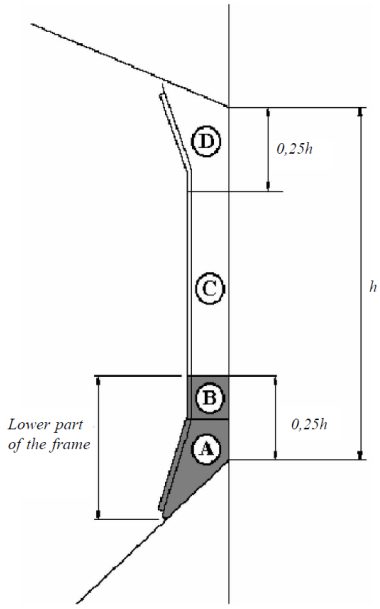

Fig. 5.2.3.2-2
Lower part and areas *(A)*, *(B)*, *(C)* and *(D)* of frames in cargo holds of bulk carriers

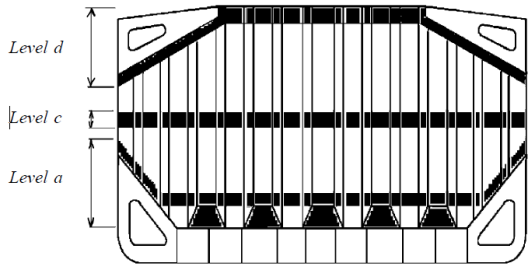

Fig. 5.2.3.2-3
Levels *a*, *c* and *d* for close-up surveys of transverse bulkheads having no upper and lower stools in cargo holds of bulk carriers

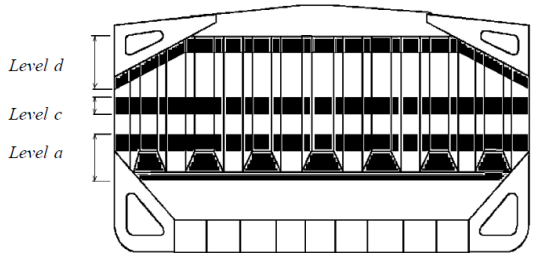

Fig. 5.2.3.2-4
Levels *b*, *c* and *d* for close-up surveys of transverse bulkheads having upper and lower stools in cargo holds of bulk carriers

5.2.3.3 The surveyor may extend the close-up survey, as deemed necessary, taking into account the maintenance of the spaces under survey, the condition of the corrosion prevention system and where spaces have structural arrangements or details, which have suffered defects in similar spaces or similar ships according to available information.

5.2.3.4 For areas in spaces where hard protective coatings are found to be in a GOOD condition, the scope of close-up surveys according to Table 5.2.3.2 may be specially considered (refer also to 5.2.2.3.2).

5.2.4 Extent of thickness measurements.

5.2.4.1 The minimum requirements to thickness measurements at special survey are given in Table 5.2.4.1.

For additional thickness measurement guidelines applicable to the vertically corrugated transverse bulkhead between cargo hold Nos. 1 and 2 on ships subject to compliance with the requirements of 5.9 (refer also to 5.1.1.4), reference shall be made to Appendix 5.9-2.

For additional thickness measurement guidelines applicable to the side shell frames and brackets on ships subject to the compliance with the requirements of 5.12 (refer also to 5.1.1.5), reference shall be made to Appendix 5.12.

Table 5.2.4.1

Minimum requirements to thickness measurements at special surveys of bulk carriers

Special survey No. 1 age ≤ 5	Special survey No. 2 5 < age ≤ 10	Special survey No. 3 10<age ≤ 15	Special survey No. 4 and subsequent age > 15
1. Suspect areas	**1.** Suspect areas **2.** Within the cargo length area: **.1** two transverse sections of deck plating outside line of cargo hatch openings **3.** Wind and water strakes in way of the two transverse sections considered above Selected wind and water strakes outside the cargo length area **4.** Measurements, for general assessment and recording of corrosion pattern, of those structural members subject to closeup survey according to Table 5.2.3.2 **6.** Refer also to 5.1.1.5 and Appendix 5.12 for additional thickness measurement guidelines applicable to the side shell frames and brackets on ships subject to compliance with 5.12	**1.** Suspect areas **2.** Within the cargo length area: **.1** each deck plate outside line of cargo hatch openings **.2** two transverse sections beyond the line of cargo hatch openings, of which one is in the midship area **.3** all wind and water strakes **3.** Selected wind and water strakes outside the cargo length area **4.** Measurements, for general assessment and recording of corrosion pattern, of those structural members subject to close-up survey according to Table 5.2.3.2 **5.** Refer also to 5.1.1.4 and Appendix 5.9-3 for additional thickness measurement guidelines applicable to the vertically corrugated transverse watertight bulkheads between cargo hold Nos. 1 and 2 on bulk carriers subject to compliance with 5.9 **6.** Refer also to 5.1.1.5 and Appendix 5.12 for additional thickness measurement guidelines applicable to the side shell frames and brackets on bulk carriers subject to compliance with 5.12	**1.** Suspect areas **2.** Within the cargo length area: **.1** each deck plate outside line of cargo hatch openings **.2** three transverse sections beyond the line of cargo hatch openings, of which one is in the midship area **.3** each bottom plate **3.** All wind and water strakes, full length **4.** Measurements, for general assessment and recording of corrosion pattern, of those structural members subject to close-up survey according to Table 5.2.3.2 **5.** Refer also to 5.1.1.4 and Appendix 5.9-3 for additional thickness measurement guidelines applicable to the vertically corrugated transverse watertight bulkheads between cargo hold Nos. 1 and 2 on bulk carriers subject to compliance with 5.9 **6.** Refer also to 5.1.1.5 and Appendix 5.12 for additional thickness measurement guidelines applicable to the side shell frames and brackets on bulk carriers subject to compliance with 5.12

5.2.4.2 Provisions for extended measurements for areas with substantial corrosion are given in Table 5.2.4.2 and may be additionally specified in the Survey Programme as required by 1.3.1. These extended thickness measurements shall be carried out before the survey is credited as completed. Suspect areas identified during survey including at previous surveys shall be examined. Areas of substantial corrosion identified during current survey or at previous surveys shall have thickness measurements taken. For **CSR** ships, the identified substantial corrosion areas may be:

protected by coating applied in accordance with the coating manufacturer's requirements and examined at annual intervals to confirm the coating in way is still in good condition; or

alternatively required to be measured at annual intervals.

Table 5.2.4.2

Requirements for extent of thickness measurements in areas of substantial corrosion within cargo area at special survey of bulk carriers

Structural member	Extent of measurement	Pattern of measurement
1. Shell structures		
1.1 Bottom and side shell plating	*a)* Suspect plate, plus four adjacent plates *b)* Refer to other items of tables for particulars on gauging in way tanks and cargo holds	*a)* 5 point pattern for each panel between longitudinals
1.2 Bottom and side shell longitudinals	Minimum of three longitudinals in way of suspect areas	3 measurements in line across web and 3 measurements on flange
2. Transverse bulkheads in cargo holds		
2.1 Lower stool	*a)* Transverse band within 25 mm of welded connection to inner bottom	*a)* 5 points between stiffeners over 1 m length
	b) Transverse band within 25 mm of welded connection to shelf plate	*b)* 5 points between stiffeners over 1 m length
2.2 Transverse bulkhead	*a)* Transverse band at approximately mid height	*a)* 5 point pattern over 1 m^2 of plating
	b) Transverse band at part of bulkhead adjacent to upper deck or below upper stool shelf plate (for those ships fitted with upper stools)	*b)* 5 point pattern over 1m^2 of plating
3. Deck structures including cross strips, main cargo hatchways, hatch covers, coamings and topside tanks		
3.1 Cross deck strip plating	*a)* Suspect cross deck strip plating	*a)* 5 point pattern between underdeck stiffeners over 1 m length
3.2 Underdeck stiffeners	*a)* Transverse members	*a)* 5 point pattern at each end and mid span
	b) Longitudinal member	*b)* 5 point pattern on both web and flange
3.3 Hatch covers	*a)* Side and end skirts, each 3 locations	*a)* 5 point pattern at each location
	b) 3 longitudinal bands, two outboard strakes and one centerline strake	*b)* 5 point measurement each band
3.4 Hatch coamings	Each side and end of coaming, one band lower 1/3, one band upper 2/3 of coaming	5 point measurement each band, i.e. end or side coaming
3.5 Topside ballast tanks	*a)* Watertight transverse bulkheads	
	lower 1/3 of bulkhead	5 point over 1 m^2 of plating
	upper 2/3	5 point over 1 m^2 of plating
	stiffeners	5 point over 1 metre of length
	b) 2 representative swash transverse bulkheads	
	lower 1/3 of bulkhead	5 point pattern over 1 m^2 of plating
	upper 2/3 of bulkhead	5 point pattern over 1 m^2 of plating
	stiffeners	5 point over pattern 1 m of length
	c) 3 representative bays of slope plating	
	lower 1/3 of tank	5 point pattern over 1 m^2 of plating

Structural member	Extent of measurement	Pattern of measurement
	upper 2/3 of tank	5 point pattern over 1 m^2 of plating
	d) Longitudinals, suspect and adjacent	*d)* 5 point pattern both web and flange over 1 metre length
3.6 Main deck plating	Suspect plates and four adjacent	5 point pattern over 1 m^2 of plating
3.7 Main deck longitudinals	Minimum of 3 longitudinals where plating measured	5 point pattern on both web and flange over 1 metre length
3.8 Web frames/transverses	Suspect plates	5 point pattern over 1 m^2
4. Double bottom and hopper structure		
4.1 Inner/double bottom plating	Suspect plate plus all adjacent plates	5 point pattern for each panel between longitudinals over 1 m length
4.2 Inner/double bottom longitudinal	Three longitudinals where plates measured	3 measurements in line across web and three measurements on flange
4.3 Longitudinal girders or transverse floors	Suspect plates	5 point pattern over about 1 m^2
4.4 Watertight bulkheads (watertight floors)	*a)* lower 1/3 of tank	*a)* 5 point pattern over 1 m^2 of plating
	b) upper 2/3 of tank	*b)* 5 point pattern over 1 m^2 of plating
4.5 Web frames	Suspect plates	5 point pattern plates over 1 m^2 of plating
4.6 Bottom/side shell longitudinals	Minimum of three longitudinals in way of suspect areas	3 measurements in line across web and 3 measurements on flange
5. Cargo holds		
5.1 Side shell frames	Suspect frame and each adjacent	At each end and mid span: *a)* 5 point pattern of both web and flange; *b)* 5 point pattern within 25 mm of welded attachment to both shell and lower slope plate

5.2.5 Extent of tank testing.

5.2.5.1 All boundaries of ballast tanks, deep tanks and cargo holds used for water ballast within the cargo length areas, as well as representative fuel oil tanks shall be pressure tested.

5.2.5.2 The surveyor may extend the tank testing as deemed necessary.

5.2.5.3 Boundaries of ballast tanks shall be tested with a head of liquid to the top of air pipes.

5.2.5.4 Boundaries of cargo holds for water ballast shall be tested with a head of liquid to near the top of cargo hatches.

5.2.5.5 Boundaries of fuel oil tanks shall be tested with a head of liquid to the highest point that liquid will rise under service conditions. Tank testing of fuel oil tanks may be specially considered based on a satisfactory external examination of the tank boundaries, and a confirmation from the master stating that the pressure testing has been carried out according to the requirements with satisfactory results.

5.2.5.6 The testing of double bottom tanks and other spaces not designed for the carriage of liquid may be omitted, provided a satisfactory internal examination together with an examination of the tank top is carried out.

5.2.6 Additional special survey requirements after determining compliance with SOLAS XII/12 and XII/13.

5.2.6.1 For ships complying with the requirements of SOLAS XII/12 for hold, ballast and dry space water detectors, the special survey shall include an examination and a test of the water ingress detection system and of their alarms.

5.2.6.2 For ships complying with the requirements of SOLAS XII/13 for the availability of pumping systems, the special survey shall include an examination and a test of the means for draining and pumping ballast tanks forward of the collision bulkhead and bilges of dry spaces, any part of which extends forward of the foremost cargo hold, and of their controls.

5.2.6.3 For bulk carriers timing of compliance with the requirements of SOLAS XII/12 and XII/13 is specified in Appendix 5.2-2.

Appendix 5.2-1

ASSESSMENT OF THE CONDITION OF HATCH COVERS AND COAMINGS (IACS UR S21)

1 APPLICATION

Provisions of this Appendix shall apply for assessment of the condition of hatch covers and hatch coamings of cargo holds of bulk carriers, ore carriers and combination carriers contracted for construction on or after 1 January 2004 except for **CSR** bulk carriers. Structural requirements, instructions on determination of corrosion additions for structures of single skin hatch covers, plating of double skin hatch covers are given in 7.13 of Part III "Equipment, Arrangements and Outfit" of the Rules for the Classification and Construction of Sea-Going Ships.

2 ASSESSMENT OF THE CONDITION OF HATCH COVERS OF CARGO HOLDS

2.1 Steel renewal is required where the gauged thickness is less than t_{net} + 0,5 mm for:
single skin hatch covers;
plating of double skin hatch covers.
Where the gauged thickness is within the range t_{net} + 0,5 mm and t_{net} +1,0 mm, the following shall be performed:
renewal; or
hard protective coating (applied in accordance with the coating manufacturer's requirements). Coating shall be maintained in GOOD condition;
annual gauging.
For the internal structure of double skin hatch covers, thickness gauging is required when hatch cover top or bottom plating renewal shall be carried out or when this is deemed necessary, at the discretion of the RS surveyor, on the basis of the plating corrosion or deformation condition. In these cases, steel renewal for the internal structures is required where the gauged thickness is less than t_{net}.

3 HATCH COAMINGS OF CARGO HOLDS

3.1 For the structure of hatch coamings and coaming stays, the corrosion addition shall be 1,5 mm.
3.2 Longitudinal and transverse secondary stiffeners, stays and plate elements of cargo hatch coamings shall be renewed if the actual residual thickness of the coaming element is less than t_{net} + 0,5 mm.
Where the actual residual thickness is greater than t_{net} + 0,5 mm but less than t_{net} + 1,0 mm, one of the following requirements shall be met:
.1 renewal of coaming elements; or
.2 protective coating applied according to the manufacturer's procedure. Where the coating is applied, it shall be maintained in GOOD condition; or
.3 annual actual residual thickness gauging.

Appendix 5.2-2

TIMING OF COMPLIANCE OF BULK CARRIERS WITH THE REQUIREMENTS OF SOLAS XII/12 AND XII/13

1. Bulk carriers constructed prior to 1 July 2004 shall comply with the requirements of SOLAS XII/12 for hold, ballast and dry space water level detectors fitted not later than the due date of proximate annual intermediate or renewal survey, which shall be held with the purpose of issuing the Cargo Ship Safety Construction Certificate after 1 July 2004.

2. Bulk carriers constructed prior to 1 July 2004 shall comply with the requirements of SOLAS XII/13 for drainage system not later than the due date of proximate intermediate or renewal survey, which shall be held with the purpose of issuing the Cargo Ship Safety Construction Certificate after 1 July 2004 but not later than 1 July 2007.

5.3 ANNUAL SURVEY

5.3.1 Schedule.

5.3.1.1 Annual surveys shall be held within 3 months before or after anniversary date (i.e. anniversary date ±3 months) from the date of the initial survey or of the date credited for the previous special survey.

5.3.2 Scope.

5.3.2.1 General.

5.3.2.1.1 The survey shall consist of an examination for the purpose of ensuring, as far as practicable, that the hull, weather decks, hatch covers, coamings and piping are maintained in a satisfactory condition and should take into account the service history, condition and extent of the corrosion prevention system of ballast tanks and areas identified in the RS reporting documents based on results of previous surveys.

5.3.2.2 Survey of the hull.

5.3.2.2.1 Survey of the hull plating and its closing appliances shall be carried out, as far as can be seen.

5.3.2.2.2 Survey of watertight penetrations shall be carried out, as far as practicable.

5.3.2.3 Survey of weather decks, hatch covers and coamings shall be carried out.

5.3.2.3.1 Confirmation shall be obtained that no unapproved changes have been made to the hatch coamings, hatch covers and their securing and sealing devices since the last survey.

5.3.2.3.2 A thorough survey of cargo hatch covers and coamings is only possible by examination in the open as well as closed positions and shall include verification of proper opening and closing operation. As a result, the hatch cover sets within the forward 25 % of the ship's length and at least one additional set, such that all sets on the ship are assessed at least once in every 5-year period, shall be surveyed open, closed and in operation to the full extent on each direction at each annual survey, including:

.1 stowage and securing in open condition;

.2 proper fit and efficiency of sealing in closed condition; and

.3 operational testing of hydraulic and power components, wires, chains, and link drives.

The closing of the covers shall include the fastening of all peripheral, and cross joint cleats or other securing devices. Particular attention shall be paid to the condition of the hatch covers in the forward 25 % of the ship's length, where sea loads are normally greatest.

5.3.2.3.3 If there are indications of difficulty in operating and securing hatch covers, additional sets above those required by 5.3.2.3.2, at the discretion of the surveyor, shall be tested in operation.

5.3.2.3.4 Where the cargo hatch securing system does not function properly, repairs shall be carried out under the supervision of the Register. Where hatch covers and/or coamings undergo significant repairs, the strength of securing devices shall be upgraded to comply with S21.5 of IACS UR S21 (refer to 7.13 of Part III "Equipment, Arrangements and Outfit" of the Rules for the Classification and Construction of Sea-Going Ships).

5.3.2.3.5 For each cargo hatch cover set, at each annual survey, the following items shall be surveyed:

.1 cover panels, including side plates, and stiffener attachments that may be accessible in the open position by close-up survey (for corrosion, cracks, deformation);

.2 sealing arrangements of perimeter and cross joints (gaskets for condition and permanent deformation, flexible seals on combination carriers, gasket lips, compression bars, drainage channels and non-return valves);

.3 clamping devices, retaining bars, cleating (for wastage, adjustment, and condition of rubber components);

.4 closed cover locating devices (for distortion and attachment);

.5 chain or rope pulleys;
.6 guides;
.7 guide rails and track wheels;
.8 stoppers;
.9 wires, chains, tensioners, and gypsies;
.10 hydraulic system, electrical safety devices and interlocks; and
.11 end and interpanel hinges, pins and stools where fitted.

5.3.2.3.6 At each hatchway, at each annual survey, the coamings, with plating, stiffeners and brackets shall be checked for corrosion, cracks and deformation, especially of the coaming tops, including close-up survey.

5.3.2.3.7 Where considered necessary, the effectiveness of sealing arrangements may be proved by hose or chalk testing supplemented by dimensional measurements of seal compressing components.

5.3.2.3.8 Where portable covers, wooden or steel pontoons are fitted, checking the satisfactory condition, where applicable, of:

.1 wooden covers and portable beams, carriers or sockets for the portable beam, and their securing devices;
.2 steel pontoons, including close-up survey of hatch cover plating;
.3 tarpaulins;
.4 cleats, battens and wedges;
.5 hatch securing bars and their securing devices;
.6 loading pads/bars and the side plate edge;
.7 guide plates and chocks;
.8 compression bars, drainage channels and pipes.

5.3.2.3.9 On ships constructed on or after 1 January 2004 where coamings, plating and hatch cover structures of cargo holds had been coated as a result of the assessment of their condition (refer to Appendix 5.2-1), an examination with the purpose to confirm maintenance of the GOOD condition of the protective coating applied shall be carried out. Where annual thickness measurements are advised instead of coating application, these shall be carried out before the survey is credited as completed.

5.3.2.3.10 Survey of flame screens on vents to all bunker and oil tanks shall be carried out.

5.3.2.3.11 Survey of bunker and vent piping systems, including ventilators, shall be carried out.

5.3.2.4 Survey of cargo holds.

5.3.2.4.1 For ships where the corrugated transverse bulkhead between holds Nos.1 and 2 has been repaired (gusset and/or shedder plates, reinforcements fitted, coatings applied) with the purpose of compliance with the requirements of 5.9 (refer also to 5.1.1.4 and 5.1.1.7), an examination of such a bulkhead shall be carried out to confirm the satisfactory condition of the reinforcements fitted and coatings applied. Where annual thickness measurements are advised instead of coating application, these shall be carried out before the survey is credited as completed.

5.3.2.4.2 For ships where frames have been repaired (reinforcements fitted and coatings applied) with the purpose of compliance with the requirements of 5.12 (refer also to 5.1.1.5 and 5.1.1.8), an examination of such frames shall be carried out to confirm the satisfactory condition of the reinforcements fitted and protective coatings applied.

5.3.2.4.3 For bulk carriers 10 — 15 years of age, the following shall apply:

.1 overall survey of all cargo holds;

.2 close-up survey of sufficient extent, minimum 25 % of frames to establish the condition of the lower region of the shell frames including approximately lower one third length of side frame at side shell and side frame end attachment and the adjacent shell plating in the forward cargo hold. Where this level of survey reveals the need for remedial measures, the survey shall be extended to include a close-up survey of all of the shell frames

and adjacent shell plating of that cargo hold, as well as a close-up survey of sufficient extent of all remaining cargo holds;

.3 when considered necessary by the surveyor, or where extensive corrosion exists, thickness measurements shall be carried out. If the results of these thickness measurements indicate that the substantial corrosion is found, the extent of thickness measurements shall be increased in accordance with Table 5.2.4.2. These extended thickness measurements shall be carried out before the annual survey is credited as completed. Suspect areas identified at previous surveys shall be examined. Areas of substantial corrosion identified at previous surveys shall have thickness measurements taken. For **CSR** ships, the annual thickness measurements may be omitted where a protective coating has been applied in accordance with the coating manufacturer's requirements and is maintained in good condition;

.4 where a hard protective coating is fitted in cargo holds and is found in a GOOD condition, the scope of close-up survey and extent of thickness measurements may be specially considered;

.5 all piping and penetrations in cargo holds, including overboard piping, shall be examined.

5.3.2.4.4 For bulk carriers over 15 years of age, the following shall apply:

.1 overall survey of all cargo holds;

.2 close-up survey of sufficient extent, minimum 25 % of frames to establish the condition of the lower region of the shell frames including approximately lower one third length of side frame at side shell and side frame end attachment and the adjacent shell plating in the forward cargo hold and one other selected cargo hold. Where this level of survey reveals the need for remedial measures, the survey shall be extended to include a close-up survey of all of the shell frames and adjacent shell plating of that cargo hold as well as a close-up survey of sufficient extent of all remaining cargo holds;

.3 when considered necessary by the surveyor, or where extensive corrosion exists, thickness measurements shall be carried out. If the results of these thickness measurements indicate that the substantial corrosion is found, the extent of thickness measurements shall be increased in accordance with Table 5.2.4.2. These extended thickness measurements shall be carried out before the annual survey is credited as completed. Suspect areas identified at previous surveys shall be examined. Areas of substantial corrosion identified at previous surveys shall have thickness measurements taken. For **CSR** ships, the annual thickness measurements may be omitted where a protective coating has been applied in accordance with the coating manufacturer's requirements and is maintained in good condition;

.4 where a hard protective coating is fitted in cargo holds and is found in a GOOD condition, the scope of close-up surveys and extent of thickness measurements may be specially considered;

.5 all piping and penetrations in cargo holds, including overboard piping, shall be examined.

5.3.2.5 Survey of ballast tanks.

5.3.2.5.1 Survey of ballast tanks when required as a consequence of the results of the special survey (refer to 5.2.2.3.1) or intermediate survey (refer to 5.4.2) shall be carried out. When considered necessary by the RS surveyor, or where extensive corrosion exists, thickness measurements shall be carried out. If the results of these thickness measurements indicate that the substantial corrosion is found, the extent of thickness measurements shall be increased in accordance with Table 5.2.4.2. These extended thickness measurements shall be carried out before the annual survey is credited as completed. Suspect areas identified at previous surveys shall be examined. Areas of substantial corrosion identified at previous surveys shall have thickness measurements taken. For **CSR** ships, the annual thickness measurements may be omitted where a protective coating has been applied in accordance with the coating manufacturer's requirements and is maintained in good condition.

5.3.3 Survey of the foremost cargo hold of ships subject to SOLAS XII/9.1.

5.3.3.1 Bulk carriers subject to SOLAS XII/9.1 are those meeting all the following conditions:

bulk carriers of 150 m in length and upwards of single side skin construction;

carrying solid bulk cargoes having a density of 1780 kg/m^3 and above;

contracted for construction before 1 July 1999; and

constructed with an insufficient number of transverse watertight bulkheads to enable them to withstand flooding of the foremost cargo hold in all loading conditions and remain afloat in a satisfactory condition of equilibrium/stability as specified in SOLAS XII/4.3.

Note. The term "the contracted for construction" is given in 1.1.2 of Part I "Classification" of the Rules for the Classification and Construction of Sea-Going Ships.

5.3.3.2 In accordance with SOLAS XII/9.1, the scope of annual survey of the foremost cargo hold of ships indicated in 5.3.3.1 in addition to the scope of annual survey prescribed in 5.3.2 shall include the following:

.1 scope of survey;

.1.1 for bulk carriers 5 — 15 years of age, an overall survey of the foremost cargo hold, including close-up survey of sufficient extent, minimum 25 % of frames to establish the condition of:

shell frames including their upper and lower end attachments and the adjacent shell plating;

plating of transverse bulkheads;

suspect areas identified at previous surveys.

Where considered necessary by the surveyor as a result of the overall and close-up survey as described above, the survey shall be extended to include a close-up survey of all of the shell frames and adjacent shell plating of the cargo hold;

.1.2 for bulk carriers over 15 years of age, an overall survey of the foremost cargo hold, including close-up survey to establish the condition of:

shell frames including their upper and lower end attachments and the adjacent shell plating;

plating of transverse bulkheads;

suspect areas identified at previous surveys;

.2 extent of thickness measurements.

Thickness measurements shall be carried out to an extent sufficient to determine both general and local corrosion levels at areas subject to close-up survey as described in 5.3.3.2.1.1 and 5.3.3.2.1.2.

The minimum requirement for thickness measurements are suspect areas identified at previous surveys.

Where subsequent corrosion is found, the extent of thickness measurements shall be increased in accordance with the requirements of Table 5.2.4.2.

The thickness measurements may be dispensed with provided the surveyor is satisfied by the close-up survey, that there is no structural diminution and the protective coating where fitted remains effective;

.3 special consideration.

Where the hard protective coating in the foremost cargo hold is found to be in a GOOD condition, the scope of close-up surveys and extent of thickness measurements may be specially considered.

Note. For existing bulk carriers, where shipowners may elect to coat or recoat cargo holds as noted above, consideration may be given to the scope of close-up and thickness measurement surveys. Prior to the coating of cargo holds of existing ships, scantlings shall be ascertained in the presence of the surveyor.

5.3.4 Additional annual survey requirements after determining compliance with SOLAS XII/12 and XII/13.

5.3.4.1 For ships complying with the requirements of SOLAS XII/12 for hold, ballast and dry space water level detectors, the annual survey shall include an examination and a test, at random, of the water ingress detection systems and of their alarms.

5.3.4.2 For ships complying with the requirements of SOLAS XII/13 for the availability of pumping systems, the annual survey shall include an examination and a test, of the means for draining and pumping ballast tanks forward of the collision bulkhead and bilges of dry spaces, any part of which extends forward of the foremost cargo hold, and of their controls.

5.3.4.3 For bulk carriers the timing of compliance with the requirements of SOLAS XII/12 and XII/13 is specified in Appendix 5.2-2.

5.3.5 Checking the compliance with the additional requirements of the RS Rules.

5.3.5.1 Loading instrument and Loading Manual.

5.3.5.1.1 Bulk carriers of 150 m in length and upwards shall be checked for availability of an approved loading instrument on board, which shall comply with the following:

.1 the requirements of 1.4.9.4, Part II "Hull" of the Rules for the Classification and Construction of Sea-Going Ships contracted for construction before 1 July 1998;

.2 the requirements of 3.3.6, Part II "Hull" of the Rules for the Classification and Construction of Sea-Going Ships contracted for construction on or after 1 July 1998.

5.3.5.1.2 Bulk carriers of 150 m and upwards shall be checked for availability of an approved Loading Manual.

5.3.5.2 Triangle to be marked on the ship's sides.

5.3.5.2.1 Bulk carriers, on which under the structural conditions of double bottom strength in cargo hold No. 1 and the transverse bulkhead between cargo holds Nos. 1 and 2 restrictions on distribution of cargo among cargo holds and restrictions on the maximum deadweight capacity described in the approved Loading Manual shall be imposed and applied in carriage of solid bulk cargoes having a density of 1,78 t/m^3 and above and the availability of the triangle equilateral with a side of 500 m, homogenous and painted in colour contrast to the hull, marked and placed on both side plating with the vertex 300 mm below the deck line shall be checked.

5.4 INTERMEDIATE SURVEY

5.4.1 Schedule.

5.4.1.1 The intermediate survey shall be held at or between either the second or third annual survey.

5.4.1.2 Those items, which are additional to the requirements of the annual survey, may be surveyed either at or between the second or third annual survey.

5.4.1.3 Concurrent crediting to both intermediate survey and special survey for surveys and thickness measurements of spaces are not acceptable.

5.4.2 Scope.

5.4.2.1 General.

5.4.2.1.1 In addition to the scope of the annual survey as specified in 5.3, the scope of the intermediate survey shall include, depending on the ship's age, the requirements of 5.4.2.2 — 5.4.2.4.

5.4.2.2 Survey of bulk carriers of 5 — 10 years of age.

For bulk carriers of 5 — 10 years of age, the following shall apply:

.1 survey of ballast tanks:

.1.1 for tanks used for water ballast, an overall survey of representative spaces selected by the surveyor shall be carried out. The selection shall include fore and after peak tanks and a number of other tanks, taking into account the total number and type of ballast tanks. If such overall survey reveals no visible structural defects, the examination may be limited to verification that the corrosion prevention system remains efficient;

.1.2 where POOR coating condition, corrosion or other defects are found in ballast tanks, or where a soft or semihard coating has been applied, or a hard protective coating was not applied from the time of construction, the examination shall be extended to other ballast tanks of the same type;

.1.3 in ballast tanks, other than double bottom tanks, where a hard protective coating is found in POOR condition, and it is not renewed, or where a soft or semihard coating has been applied from the time of construction, the tanks in question shall be examined and thickness measurements carried out as considered necessary at subsequent annual intervals. Where a hard protective coating is found in POOR condition in ballast double bottom tanks, or where a soft coating has been applied, or where a hard or semihard protective coating has not been applied from the time of construction, the tanks in question may be examined at subsequent annual intervals. When considered necessary by the RS surveyor, or where extensive corrosion exists, thickness measurements shall be carried out;

.1.4 in addition to the requirements above, suspect areas identified at previous surveys shall be subjected to overall and close-up surveys;

.1.5 based on survey results the RS surveyor makes a record on the necessity of ballast tanks to be examined at annual intervals into the relevant RS reporting documents, the List of Ship's Status taking into account the requirements of 5.4.2.2.1.3;

.2 survey of cargo holds:

.2.1 an overall survey of all cargo holds, including close-up survey of sufficient scope, minimum 25 % of frames, shall be carried out to establish the condition of:

shell frames including their upper and lower end attachments and adjacent shell plating in the forward cargo hold and one other selected cargo hold;

areas of the plating of transverse bulkheads in forward cargo hold and one other selected cargo hold;

areas found suspect at previous surveys;

.2.2 where considered necessary by the surveyor as a result of the above overall and close-up survey, the survey shall be extended to include a close-up survey of all of the shell frames and adjacent shell plating of those cargo holds, as well as a close-up survey of sufficient scope of all remaining cargo holds;

.3 extent of thickness measurements:

.3.1 thickness measurements shall be carried out to an extent sufficient to determine both general and local corrosion levels at areas subject to close-up survey as described in 5.4.2.2.2.1.

The minimum requirements to thickness measurements at the intermediate survey are suspect areas identified at previous surveys;

.3.2 the extent of thickness measurements may be specially considered, provided the surveyor is satisfied by the close-up survey, that there is no structural diminution and the hard protective coatings are found to be in a GOOD condition;

.3.3 where substantial corrosion is found, the extent of thickness measurements shall be increased in accordance with the requirements of Table 5.2.4.2. These extended thickness measurements shall be carried out before the survey is credited as completed. Suspect areas identified at previous surveys shall have thickness measurements taken. For **CSR** ships, the identified substantial corrosion areas:

may be protected by coating applied in accordance with the coating manufacturer's requirements and examined at annual intervals to confirm the coating in way is still in good condition; or alternatively;

required to be measured at annual intervals;

.3.4 where the hard protective coating in cargo holds is found to be in a GOOD condition, the scope of close-up surveys and extent of thickness measurements may be specially considered.

N o t e . For existing bulk carriers, where shipowners may elect to coat or recoat cargo holds as noted above, consideration may be given to the scope of close-up and thickness measurement surveys. Prior to the coating of cargo holds of existing ships, scantlings shall be ascertained in the presence of the surveyor.

5.4.2.3 Survey of bulk carriers of 10 — 15 years of age.

For bulk carriers of 10 — 15 years of age, the following shall apply:

.1 the requirements of the intermediate survey shall be to the same extent as the previous special survey as required in 1.3.1 and 5.2. However, internal examination of fuel tanks and pressure testing of all tanks are not required unless deemed necessary by the attending surveyor;

.2 the above-mentioned survey may be commenced at the second annual survey and be progressed during the succeeding year with a view to completion at the third annual survey;

.3 at intermediate survey the in-water survey may be considered in lieu of the requirements of 5.2.2.2.

5.4.2.4 Survey of bulk carriers over 15 years of age.

For bulk carriers over 15 years of age, the following shall apply:

.1 the requirements of the intermediate survey shall be to the same extent as the previous special survey as required in 1.3.1 and 5.2. However, an internal examination of fuel tanks and pressure testing of all tanks are not required unless deemed necessary by the attending surveyor;

.2 the above-mentioned intermediate survey may be commenced at the second annual survey and be progressed during the succeeding year with a view to completion at the third annual survey;

.3 a survey in dry dock shall be part of the intermediate survey. The overall and close-up surveys and thickness measurements, as applicable, of the lower portions of the cargo holds and water ballast tanks shall be carried out in accordance with the applicable requirements for intermediate surveys, if not already performed. The scope of dry dock survey is specified in 2.5 of Part II "Survey Schedule and Scope".

N o t e . Lower portions of the cargo holds and ballast tanks are considered to be the parts below the light ballast waterline.

5.5 PREPARATIONS FOR SURVEY

5.5.1 The provisions related to preparations for survey are given in 1.3.

5.6 DOCUMENTATION ON BOARD

5.6.1 The provisions related to availability and verification of documentation on board are given in 1.4.

5.7 PROCEDURES FOR THICKNESS MEASUREMENTS

5.7.1 The provisions related to the procedures for thickness measurements of hull structures are given in 1.5.

5.8 REPORTING ON HULL SURVEY AND EVALUATION OF SURVEY

5.8.1 The provisions related to drawing up the RS reporting documents and evaluation of survey results are given in 1.9.

5.9 EVALUATION OF SCANTLINGS OF THE TRANSVERSE WATERTIGHT CORRUGATED BULKHEAD BETWEEN CARGO HOLDS NOS. 1 AND 2 WITH CARGO HOLD NO. 1 FLOODED (IACS UR S19)

5.9.1 Application and definitions.

5.9.1.1 These requirements apply to all bulk carriers of 150 m in length and above, in the foremost hold, intending to carry solid bulk cargoes having a density of 1,78 t/m^3, or above, with single deck, topside tanks and hopper tanks, fitted with vertically corrugated transverse watertight bulkheads between cargo holds Nos. 1 and 2 where:

.1 the foremost hold is bounded by the side shell only for ships, which were contracted for construction prior to 1 July 1998;

.2 the foremost hold is double side skin construction of less than 760 mm breadth measured perpendicular to the side shell in ships, the keels of which were laid, or which were at a similar stage of construction, before 1 July 1999.

5.9.1.2 Existing bulk carriers, indicated in 5.9.1.1 shall comply with these requirements by dates specified in 5.11.1.1.

5.9.1.3 To estimate the possibility of transportation of the bulk cargoes with a density of 1,78 t/m^3 and above on board the ship according to the requirements for the scantlings of the transverse bulkhead between cargo holds Nos. 1 and 2, the block-diagram given in Appendix 5.9-1 shall apply.

5.9.1.4 The net scantlings of the transverse bulkhead between cargo holds Nos. 1 and 2 shall be calculated using the loads, given in 5.9.2, bending moment and shearing force, given in 5.9.3 and the strength criteria given in 5.9.4.

5.9.1.5 Steel renewal and/or reinforcements, where required, shall be carried out in accordance with 5.9.6.

5.9.1.6 With the purposes of the present Chapter, homogeneous loading condition means the loading conditions, in which the ratio between the highest and the lowest filling ratio, evaluated for the two foremost cargo holds does not exceed 1,20 to be corrected for different cargo density.

5.9.2 Load model.

5.9.2.1 General.

The loads to be considered as acting on the bulkhead are those given by the combination of cargo loads with those induced by the flooding of cargo hold No.1.

The most severe combination of cargo induced loads and flooding loads shall be used for the check of the scantlings of the bulkhead, depending on the following loading conditions included in the Loading Manual:

homogeneous loading conditions;

non-homogeneous loading conditions.

Non-homogeneous part loading conditions associated with multiport loading and unloading operations for homogeneous loading conditions need not to be considered.

5.9.2.2 Bulkhead corrugation flooding head.

The flooding head h_f (refer to Fig. 5.9.2.2) is the distance, in m, measured verticals with the ship in the upright distance d_f, in m, from the baseline equal to:

in general — D;

for ships less than 50000 tons deadweight with Type B freeboard — $0{,}95\mathrm{D}$;

where D is the distance, in m, from the baseline to the freeboard deck at side amidships (refer to Fig. 5.9.2.2);

For ships to be operated at an assigned load line draught T_r, less than the permissible load line draught T, the flooding head being defined above, may be reduced by the value $\mathrm{T}-T_\mathrm{r}$.

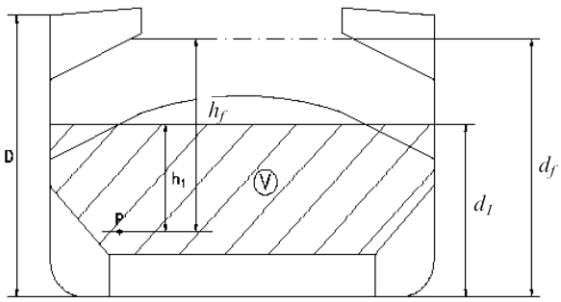

Fig. 5.9.2.2
Diagram of loaded hold:
V = volume of cargo, in m³; P = calculation point

5.9.2.3 Pressure in the flooded holds.

5.9.2.3.1 Bulk cargo loaded hold.

Two cases of hold loading shall be considered depending on the values of d_1 and d_f, where d_1 (refer to Fig. 5.9.2.2) is a distance from the baseline given, in m, determined by the following formula:

$$d_1 = \frac{M_c}{\rho_c l_c B} + \frac{V_{LS}}{l_c B} + (h_{HT} - h_{DB})\frac{b_{HT}}{B} + h_{DB}, \qquad (5.9.2.3.1)$$

where M_c = mass of cargo in hold No.1, in t;
ρ_c = bulk cargo density, in t/m³;
l_c = length of hold No.1, in m;
B = ship's breadth amidships, in m;
V_{LS} = volume, in m³, of the bottom stool of the bulkhead above the inner bottom;
h_{HT} = height of the hopper tanks amidships, in m, from the baseline;
h_{DB} = height of the double bottom, in m;
b_{HT} = breadth of the hopper tanks amidships, in m;

.1 the first case of hold loading.

When $d_f \geq d_1$, at each point of the bulkhead located at a distance between d_1 and d_f from the baseline, the pressure $p_{c,f}$, in kN/m², shall be determined by the formula

$$p_{c,f} = \rho g h_f \qquad (5.9.2.3.1.1\text{-}1)$$

where ρ = sea water density, in t/m³;
g = 9,81 m/s², gravity acceleration;
h_f = flooding head, refer to 5.9.2.2.

At each point of the bulkhead located at a distance lower than d_1 from the baseline, the pressure $p_{c,f}$, in kN/m², shall be determined by the formula

$$p_{c,f} = \rho g h_f + [\rho_c - \rho(1 - perm)] g h_1 \tan^2\gamma \qquad (5.9.2.3.1.1\text{-}2)$$

where ρ, g, h_f = as given above;
ρ_c = bulk cargo density, in t/m³;
perm= permeability of cargo; to be taken as 0,3 for ore (corresponding bulk cargo density for iron ore may generally be taken as 3,0 t/m³);
h_1 = vertical distance, m, from the calculation point to the level located at a distance d_1 from the baseline, as mentioned above (refer to Fig. 5.9.2.2);
γ = 45°— (φ/2);
φ = angle of repose of the cargo, in degrees, and may generally be taken as 35° for iron ore.

The force $F_{c,f}$, in kN, acting on a corrugation, shall be determined by the formula

$$F_{c,f} = s_1 \left[\rho g \frac{(d_f - d_1)^2}{2} + \frac{\rho g (d_f - d_1) + (p_{c,f})_{le}}{2} + (d_1 - h_{DB} - h_{LS}) \right] \qquad (5.9.2.3.1.1\text{-}3)$$

where s_1 = spacing of corrugations (refer to Fig. 5.9.2.3.1.1);
ρ, g, d_1, h_{DB} = as given above;
d_f = as given in 5.9.2.2;
$(p_{c,f})_{le}$ = pressure, in kN/m^2, at the level of the bottom stool section of the bulkhead;
h_{LS} = height of the lower stool for the bulkhead, in m, from the inner bottom;

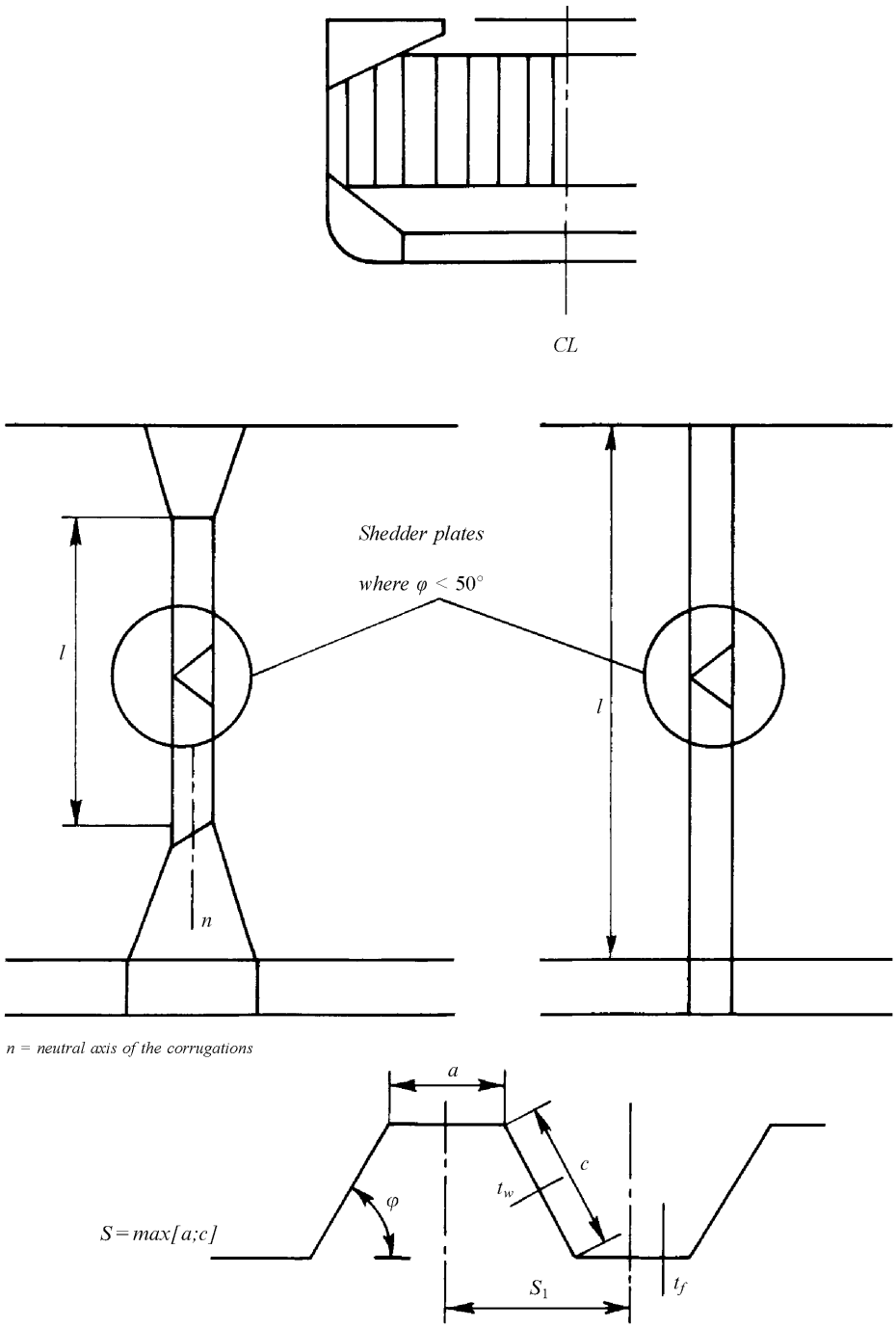

Fig. 5.9.2.3.1.1
Diagram of the transverse bulkhead corrugation

.2 the second case of hold loading.

When $d_f < d_1$, then at each point of the bulkhead located at a distance between d_f and d_1, the pressure $p_{c,f}$, in kN/m^2, shall be determined by the formula

$$p_{c,f} = \rho_c g h_1 \tan^2\gamma \qquad (5.9.2.3.1.2\text{-}1)$$

where ρ_c, g, h_1, γ = refer to 5.9.2.3.1.1.

At each point of the bulkhead located at a distance below d_f, from the baseline, the pressure $p_{c,f}$, in kN/m^2, shall be determined by the formula

$$p_{c,f} = \rho g h_f + [\rho_c h_1 - \rho(1 - perm)h_f] g \tan^2\gamma \qquad (5.9.2.3.1.2\text{-}2)$$

where ρ, g, h_f, ρ_c, *perm*, h_1, γ = refer to 5.9.2.3.1.1.

The force $F_{c,f}$, in kN, acting on corrugation, shall be determined by the formula

$$F_{c,f} = s_1 \left[\rho_c g \frac{(d_1 - d_f)^2}{2} \tan^2\gamma + \frac{\rho_c g (d_1 - d_f)\tan^2\gamma + (p_{c,f})_{le}}{2} + (d_f - h_{DB} - h_{LS}) \right] \qquad (5.9.2.3.1.2\text{-}3)$$

where s_1, ρ_c, g, h_{LS}, $(p_{c,f})_{le}$, γ = refer to 5.9.2.3.1.1;
d_1, h_{DB} = refer to 5.9.2.3.1;
d_f = refer to 5.9.2.2.

5.9.2.3.2 Empty hold.

At each point of the bulkhead the hydrostatic pressure p_f, induced by the flooding head h_f shall be considered.

The force F_f, in kN, acting on corrugation, shall be determined by the formula

$$F_f = s_1 \rho g \frac{(d_f - h_{DB} - h_{LS})^2}{2} \qquad (5.9.2.3.2)$$

where s_1, ρ, g, h_{LS} = refer to 5.9.2.3.1.1;
h_{DB} = refer to 5.9.2.3.1;
d_f = refer to 5.9.2.2.

5.9.2.4 Pressure in the non-flooded bulk cargo loaded hold.

At each point of the bulkhead the pressure p_c, in kN/m^2, shall be determined by the formula

$$p_c = \rho_c g h_1 \tan^2\gamma \qquad (5.9.2.4\text{-}1)$$

where ρ_c, g, h_1, γ = refer to 5.9.2.3.1.1.

The force F_c, in kN, acting on a corrugation, shall be determined by the formula

$$F_c = s_1 \rho_c g \frac{(d_1 - h_{DB} - h_{LS})^2}{2} \tan^2\gamma \qquad (5.9.2.4\text{-}2)$$

where ρ_c, g, h_{LS}, γ = refer to 5.9.2.3.1.1;
d_1, h_{DB} = refer to 5.9.3.1.

5.9.2.5 Resultant pressure.

5.9.2.5.1 Homogeneous ship loading conditions.

For calculating of the scantlings at each point of the bulkhead structures, the resultant pressure p, in kN/m^2, shall be determined by the formula

$$p = p_{c,f} - 0{,}8\rho_c. \qquad (5.9.2.5.1\text{-}1)$$

The resultant force F, in kN, acting on a corrugation, shall be determined by the formula

$$F = F_{c,f} - 0{,}8F_c. \qquad (5.9.2.5.1\text{-}2)$$

5.9.2.5.2 Non-homogeneous ship loading conditions.

For calculating of scantlings at each point of the bulkhead structures the resultant pressure p, shall be determined by the formula

$$p = p_{c,f}. \qquad (5.9.2.5.2\text{-}1)$$

The resultant force F, in kN, acting on a corrugation, shall be determined by the formula

$$F = F_{c,f}. \qquad (5.9.2.5.2\text{-}2)$$

In case hold No. 1, in non-homogeneous conditions, is not allowed to be loaded, the resultant pressure p, in kN/m^2, to be considered for calculating of the scantlings shall be determined by the formula

$$p = p_f \qquad (5.9.2.5.2\text{-}3)$$

and the resultant force F, in kN, acting on a corrugation, is determined by the formula

$$F = F_f. \qquad (5.9.2.5.2\text{-}4)$$

5.9.3 Bending moment and shear force in the bulkhead corrugations.

The bending moment M and the shear force Q in the bulkhead corrugations shall be obtained using Formulae (5.9.3.1) and (5.9.3.2). The M and Q values shall be used for the checks according to 5.9.4.

5.9.3.1 Bending moment.

The designed bending moment M, in kNm, for the bulkhead corrugations shall be determined by the formula

$$M = Fl/8 \qquad (5.9.3.1)$$

where F = resultant force, in kN (refer to 5.9.2.5);
l = span of the corrugation, in m (refer to Figs. 5.9.2.3.1.1 and 5.9.3.1).

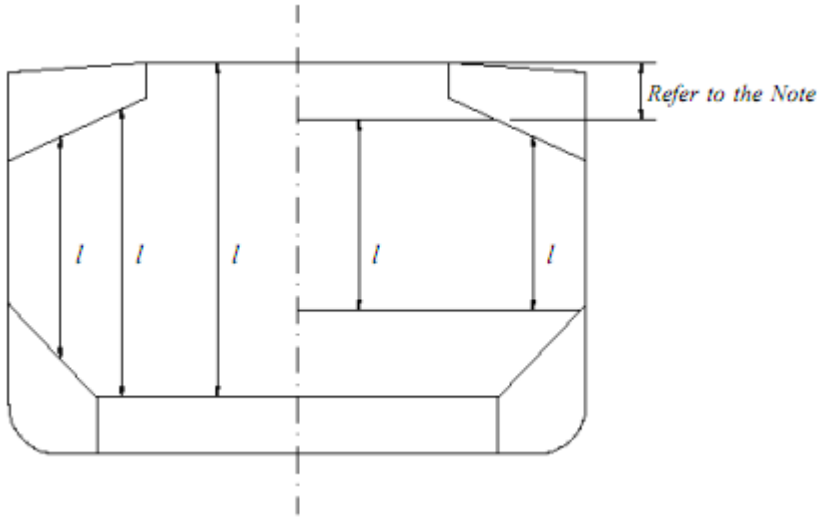

Fig. 5.9.3.1
Diagram for definition of the corrugation span of the transverse bulkhead

N o t e . For the definition of the corrugation span the internal end of the upper stool shall not be taken more than a distance from the deck at the centerline equal to:

3 times the depth of corrugations, in general;

2 times the depth of corrugations, for rectangular stool.

5.9.3.2 Shear force.

The shear force Q, in kN, at the lower end of the bulkhead corrugations shall be determined by the formula

$$Q = 0{,}8F \qquad (5.9.3.2)$$

where F = refer to 5.9.2.5.

5.9.4 Strength criteria.

5.9.4.1 General.

The following criteria are applicable to transverse bulkheads with vertical corrugations (refer to Fig. 5.9.2.3.1.1).

Requirements for local net plate thickness are given in 5.9.4.7.

In addition, the criteria given in 5.9.4.2 and 5.9.4.5 shall be complied with.

Where the corrugation angle φ, shown in Fig. 5.9.2.3.1.1, is less than 50°, a horizontal row of staggered shedder plates shall be fitted at approximately mid depth of the corrugations (refer to Fig. 5.9.2.3.1.1) to help preserve dimensional stability of the bulkhead under flooding loads. The shedder plates shall be welded to the corrugations by double continuous welding, but they shall not be welded to the side shell.

The thickness of the lower part of corrugations considered in the application of 5.9.4.2 and 5.9.4.3 shall be maintained for a distance from the inner bottom (if no lower stool is fitted) or the top of the lower stool not less than $0{,}15l$ (where l is a span of the corrugation, in m).

The thickness of the middle part of corrugations considered in the application of 5.9.4.2 and 5.9.4.4 shall be maintained to a distance from the deck (if no upper stool is fitted) or the bottom of the upper stool not greater than $0{,}3l$.

5.9.4.2 Bending capacity and shear stress τ.

The bending capacity of the bulkhead shall be in compliance with the following relationship:

$$10^3 \frac{M}{0{,}5 Z_{le}\sigma_{a,le} + Z_m \sigma_{a,m}} \leq 1{,}0 \qquad (5.9.4.2\text{-}1)$$

where M = bending moment, in kNm (refer to 5.9.3.1);
Z_{le} = section modulus of one half pitch corrugation, in cm³, at the lower end of corrugations to be calculated according to 5.9.4.3;
Z_m = section modulus of one half pitch corrugation, in cm³, at the mid-span of corrugations to be calculated according to 5.9.4.4;
$\sigma_{a,le}$ = allowable stresses, in N/mm², in accordance with 5.9.4.5 for the lower end of corrugations;
$\sigma_{a,m}$ = allowable stresses, in N/mm², in accordance with 5.9.4.5 for the mid-span of corrugations.

In no case the Z_m value shall be taken greater than the lesser of $1{,}15Z_{le}$ or $1{,}15Z'_{le}$ for calculation of the bending capacity of the bulkhead (Z'_{le} is defined below).

In case effective shedder plates are fitted which:

are not knuckled;

are welded to the corrugations and the upper horizontal/sloping plate of the lower stool (flange) for the bulkhead by one side penetration welds or equivalent;

are fitted with a minimum slope 45° and their lower edge is in line with the stool side plating;

or effective gusset plates are fitted, which are fitted in line with the stool side plating and have material properties at least equal to those provided for the flanges,then the section modulus Z_{le}, in cm³, shall be taken not larger than the Z'_{le} value, in cm³ , determined by the formula

$$Z'_{le} = Z_g + 10^3 \frac{Qh_g - 0{,}5h^2{}_g s_1 p_g}{\sigma_a} \qquad (5.9.4.2\text{-}2)$$

where Z_g = section modulus of one half pitch corrugation, in cm³, according to 5.9.4.4, in way of the upper end of shedder or gusset plates, as applicable;
Q = shear force, in kN (refer to 5.9.3.2);
h_g = height, in m, of shedder or gusset plates, as applicable (refer to Figs. 5.9.4.2-1 to 5.9.4.2-4);
s_1 = refer to 5.9.2.3.1.1;
p_g = resultant pressure, in kN/m², as defined in 5.9.2.5, calculated in way of the middle of the shedders or gusset plates, as applicable;
σ_a = allowable stresses, in kN/m², as given in 5.9.4.5.

Stresses τ are obtained by dividing the shear force Q by the shear area. The shear area shall be reduced in order to account for the possible non-perpendicularity between the corrugation webs and flanges (adjacent faces of the corrugation). In general, the reduced shear area may be obtained by multiplying the web sectional area (corrugation face located at an angle to the bulkhead plane) by $\sin\varphi$ (where $\sin\varphi$ being the angle between the web and the flange of the corrugation).

When calculating the section moduli and the shear area, the net plate thicknesses of the plates shall be used.

The section moduli of corrugations shall be calculated on the basis of the requirements given in 5.9.4.3 and 5.9.4.4.

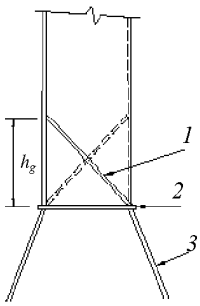

Fig. 5.9.4.2-1
Symmetric shedder plates:
1 — shedder plate;
2 — horizontal/sloping plate of the lower stool (flange) for the bulkhead;
3 — vertical/sloping plate of the lower stool for the bulkhead

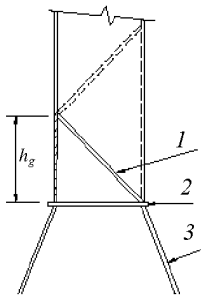

Fig. 5.9.4.2-2
Asymmetric shedder plates:
1 — shedder plate;
2 — horizontal/sloping plate of the lower stool (flange) for the bulkhead;
3 — vertical/sloping plate of the lower stool for the bulkhead

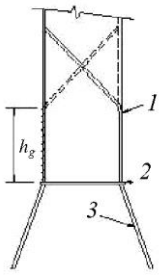

Fig. 5.9.4.2-3
Symmetric gusset plate/shedder plates:
1 — gusset/shedder plate;
2 — horizontal/sloping plate of the lower stool (flange) for the bulkhead;
3 — vertical/sloping plate of the lower stool for the bulkhead

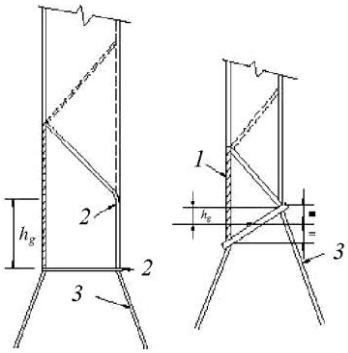

Fig. 5.9.4.2-4
Asymmetric gusset plate/shedder plates:
1 — gusset/shedder plate;
2 — horizontal/sloping plate of the lower stool (flange) for the bulkhead;
3 — vertical/sloping plate of the lower stool for the bulkhead

5.9.4.3 Section modulus at the lower end of corrugations.

The section modulus shall be calculated with the compression flange having an effective flange width $b_{c,f}$, not larger than as given in 5.9.4.6.1.

If the corrugation web is not supported by local brackets fitted below the upper horizontal/sloping plate of the lower stool for the bulkhead (or below the inner bottom) in the lower part, the section modulus of the corrugations shall be calculated considering the corrugation webs 30 % effective.

5.9.4.3.1 Provided that effective shedder plates, as defined in 5.9.4.2 (refer to Figs. 5.9.4.2-1 and 5.9.4.2-2), are fitted, when calculating the second modulus of corrugations at the lower end (cross-section in the above-mentioned Figs.), the area of flange plates, in cm^2, may be increased by

$$\left(2{,}5a\sqrt{t_f t_{sh}}\sqrt{\sigma_{F_{sh}}/\sigma_{F_{ft}}}\right)$$, but not to be taken greater than $2{,}5at_f$

where a = width, in m, of the corrugation flange (refer to Fig. 5.9.2.3.1.1);
t_{sh} = net shedder plate thickness, in mm;

t_f = net thickness of corrugation flange, in mm;
$\sigma_{F_{sh}}$ = minimum upper yield stress, in N/mm^2, of the material used for the shedder plates;
$\sigma_{F_{ft}}$ = minimum upper yield stress, in N/mm^2, of the material used for the corrugation flanges.

5.9.4.3.2 Provided that effective gusset plates, as defined in 5.9.4.2 (refer to Figs. 5.9.4.2-3 and 5.9.4.2-4), are fitted, when calculating the section modulus of the corrugations at the lower end (cross-section in the above-mentioned Figs.), the area of flange plates, in cm^2 , may be increased by multiplying

$$(7h_g \cdot t_{gu})$$

where h_g = height of gusset plate, in m, (refer to Figs. 5.9.4.2-3 and 5.9.4.2-4) but not to be taken greater than (10/7s_{gu});
s_{gu} = width of the gusset plates, in m;
t_{gu} = net gusset plate thickness, in mm, but not to be taken greater than t_f;
t_f = net flange thickness, in m, based on the as-built condition.

5.9.4.3.3 If the corrugation webs are welded to upper sloping plate of the lower stool for the bulkhead, which is at an angle not less than 45° with horizontal plane, the section modulus of the corrugations may be calculated considering the corrugation webs fully effective. In case effective plates are fitted, when calculating the section modulus of corrugations the area of flange plates may be increased as specified in 5.9.4.3.2. No credit can be given to shedder plates only.

For angles less than 45°, the effectiveness of the web may be obtained by linear interpolation between 30 % for 0° and 100 % for 45°.

5.9.4.4 Section modulus of corrugations at cross-section other than the lower end.

The section modulus shall be calculated with the corrugation webs considered effective and the compression flange having an effective flange width $b_{e,\,f}$, not larger than as given in 5.9.4.6.1.

5.9.4.5 Allowable stress check.

The normal and shear stresses σ and τ shall not exceed the allowable values σ_a and τ_a, in N/mm^2, determined by the formulae:

$$\sigma_a = \sigma_F; \qquad (5.9.4.5\text{-}1)$$

$$\tau_a = 0.5\sigma_F \qquad (5.9.4.5\text{-}2)$$

where σ_F = minimum upper yield stress, in N/mm^2, of the material.

5.9.4.6 Effective compression flange width and shear buckling check.

5.9.4.6.1 Effective width of the compression flange of corrugations.

The effective width b_{ef}, in m, of the corrugation flange shall be determined by the formula

$$b_{ef} = C_e a \qquad (5.9.4.6.1)$$

where C_e = 2,25/β – 1,25/β^2 for β > 1,25;
C_e = 1,0 for β ≤ 1,25;
β = $10^3 \frac{a}{t_f}\sqrt{\sigma_F/E}$;
t_f = net flange thickness, in mm;
a = width, in m, of the corrugation flange (refer to Fig. 5.9.2.3.1.1);
σ_F = minimum upper yield stress, in N/mm^2, of the material;
E = modulus of elasticity, in N/mm^2, to be assumed equal to 2,06×10^5 for steel.

5.9.4.6.2 Shear.

The buckling check shall be performed for the web plates at the corrugation ends.

The shear stress τ shall not exceed the critical value τ_C, in N/mm^2, obtained by the following formulae:

$$\tau_C = \tau_E \; for \; \tau_E \leq \tau_F/2; \qquad (5.9.4.6.2\text{-}1)$$

$$\tau_C = \tau_F(1 - \tau_F/4\tau_E) \; for \; \tau_E > \tau_F/2 \qquad (5.9.4.6.2\text{-}2)$$

where τ_F = $\sigma_F/\sqrt{3}$;
σ_F = minimum upper yield stress, in N/mm^2, of the material;
τ_E = $0{,}9k_t$ E $(t/1000c)^2$, in N/mm^2;
τ_E = $0{,}9k_t$ E $(t/1000c)^2$, in N/mm^2;
k_t = 6,34;
E = modulus of elasticity of material as given in 5.9.4.6.1;
t = net thickness, in mm, of corrugation web;
c = width, in m, of corrugation web (refer to Fig. 5.9.2.3.1.1).

5.9.4.7 Local net plate thickness. The bulkhead local net plate thickness t, in mm, shall be determined by the formula

$$t = 14{,}9 s_w \sqrt{p/\sigma_F} \qquad (5.9.4.7\text{-}1)$$

where s_w = plate width, in m, to be taken equal to the width of the corrugation flange or web, whichever is the greater (refer to Fig. 5.9.2.3.1.1);
p = resultant pressure, in N/mm^2, as defined in 5.9.2.5, at the lower bottom of each strake of plating. In all cases the net thickness of the lowest strake shall be determined using the resultant pressure at the top of the lowest stool, or at the inner bottom, if no lower stool is fitted or at the top of the shedders, if shedder or shedder/gusset plates are installed;
σ_F = minimum upper yield stress, in N/mm^2, of the material.

For built-up corrugated bulkheads, when the thickness of the flange and web are different, net thickness of the narrower plating shall not be less than t_n, in mm, determined by the formula

$$t_n = 14{,}9 s_n \sqrt{p/\sigma_F} \qquad (5.9.4.7\text{-}2)$$

where s_n = the width, in m, of the narrower plating.

The net thickness of the wider plating, in mm, shall not be taken less than the maximum of the following values:

$$t_w = 14{,}9 s_w \sqrt{p/\sigma_F}; \qquad (5.9.4.7\text{-}3)$$

$$t_w = \sqrt{440 {s_w}^2 \, p/\sigma_F - {t_{np}}^2} \qquad (5.9.4.7\text{-}4)$$

where t_{np} = is assumed not to be greater than the actual net thickness of the narrower plating or not greater than $14{,}9 s_w \sqrt{p/\sigma_F}$, whichever is lesser.

5.9.5 Local details.

The design of local details shall comply with the requirements of Part II "Hull" of the Rules for the Classification and Construction of Sea-Going Ships for the purpose of

transferring the corrugated bulkhead forces and moments to the boundary structures, in particular to the double bottom and cross-deck structures.

In particular, the thickness and stiffening of gusset and shedder plates installed for strengthening purposes shall comply with the requirements of Part II "Hull" of the Rules for the Classification and Construction of Sea-Going Ships on the basis of the load model given in 5.9.2.

Unless otherwise stated, weld connections shall be dimensioned and selected in accordance with the requirements of Part II "Hull" and Part XIV "Welding" of the Rules for the Classification and Construction of Sea-Going Ships.

5.9.6 Corrosion addition and steel renewal.

5.9.6.1 Renewal/reinforcement shall be done in accordance with the following requirements and the Guidelines contained in Appendix 5.9-2.

Steel renewal is required where the gauged thickness is less than t_{net} + 0,5 mm (t_{net} is the thickness used for the calculation of bending capacity of the bulkhead and shear stresses as given in 5.9.4.2 or the local net plate thickness as given in 5.9.4.7). Alternatively, reinforcing doubling strips may be used, provided the net thickness is not dictated by shear strength requirements for web plates (refer to 5.9.4.5 and 5.9.4.6.2) or by the local pressure requirements for web and flange plates (refer to 5.9.4.7).

Where the gauged thickness is within the range t_{net} + 0,5 mm and t_{net} + 1,0 mm, coating (applied in accordance with the coating manufacturer's requirements) or annual gauging of the bulkhead thicknesses may be adopted as an alternative to steel renewal.

5.9.6.2 Where steel renewal or reinforcement of the structure is required, a minimum thickness of t_{net} + 2,5 mm shall be replenished for the renewed or reinforced parts.

5.9.6.3 When complying with the requirement

$$0.8(\sigma_{Ff_l} \cdot t_{fl}) \geq \cdot\, t_{st} \qquad (5.9.6.3)$$

where σ_{Ff_l} = minimum upper yield stress, in N/mm^2, of the material used for the corrugation flanges;

σ_{Fs} = minimum upper yield stress, in N/mm^2, of the material used for the lower stool side plating or floors (if no stool is fitted);

t_{fl} = flange thickness, in mm, which is found to be acceptable on the basis of the criteria specified in 5.9.6.1 or, when steel renewal is required, the increased thickness according to the criteria given in 5.9.6.2. The above mentioned thickness of the corrugation flange thickness dictated by the local pressure requirements (refer to 5.9.4.7), need not to be considered for the purpose;

t_{st} = as-built thickness, in mm, of the lower stool side plating or floors (if no stool is fitted). Gussets/shedder plates, extending from the lower end of corrugations up to 0,1 *l*, or reinforcing doubling strips (on bulkhead corrugations and lower stool side plating) shall be fitted.

If gusset plates are fitted, the material of such gusset plates shall be the same as that of the corrugation flanges. The gusset plates shall be connected to the upper horizontal/sloping plate of the lower stool for the bulkhead or inner bottom (if no stool is fitted) by deep penetration welds (refer to Fig. 5.9.6.3).

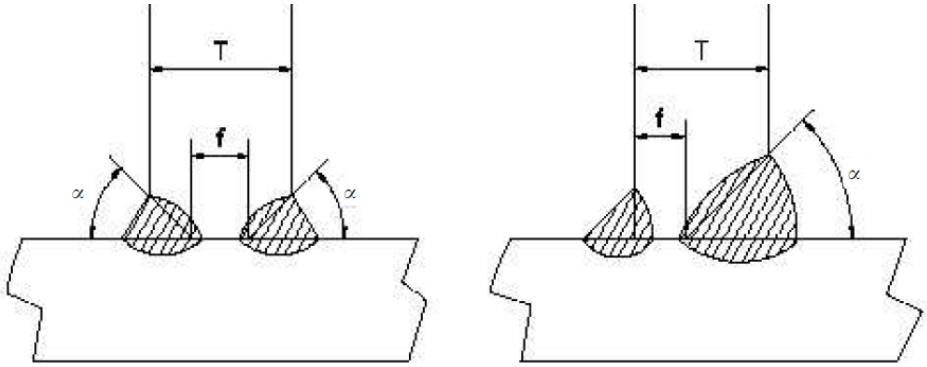

Fig. 5.9.6.3
Structural elements of welds
(root face f: 3 mm to T/3 mm; groove angle α: 40° to 60°)

5.9.6.4 Where steel renewal is required, the bulkhead connections to the upper horizontal/sloping plate of the lower stool for the bulkhead or inner bottom (if no stool is fitted) shall be at least made by deep penetration welds (refer to Fig. 5.9.6.3).

5.9.6.5 Where gusset plates shall be fitted or renewed, their connections with the corrugations and the upper horizontal/sloping plate of the lower stool for the bulkhead or inner bottom (ifno stool is fitted) shall be at least made by deep penetration welds (refer to Fig. 5.9.6.3).

Appendix 5.9-1

GUIDELINES TO ASSESS CAPABILITY OF CARRIAGE OF HIGH DENSITY CARGOES ON EXISTING BULK CARRIERS ACCORDING TO THE STRENGTH OF TRANSVERSE BULKHEAD BETWEEN CARGO HOLDS NOS. 1 AND 2

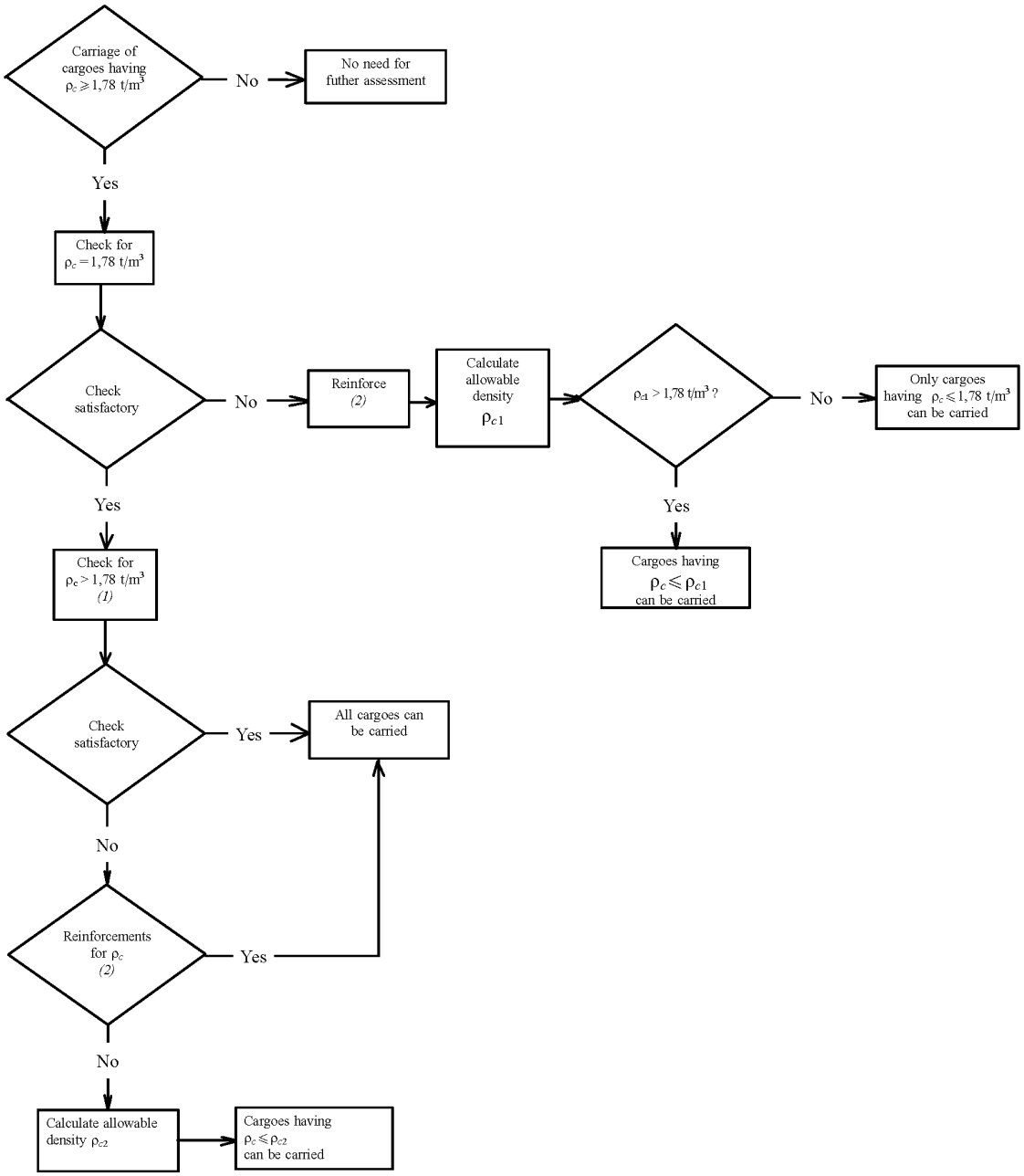

N o t e s : (1) ρ_c typical of cargoes to be carried; in any case a value of 3,0 t/m³ corresponding to ore cargo, shall be considered.

(2) In deciding the reinforcement needed, consideration shall be given to the effects of restricting the cargo distribution (homogeneous loading condition or reduction in the ship deadweight).

Appendix 5.9-2

GUIDELINES ON RENEWAL/REINFORCEMENT OF VERTICALLY CORRUGATED TRANSVERSE WATERTIGHT BULKHEAD BETWEEN CARGO HOLDS NOS. 1 AND 2

1. The need for renewal or reinforcement of the vertically corrugated transverse watertight bulkhead between cargo holds Nos. 1 and 2 shall be determined by the Register on a case by case basis using the criteria given in the present Guidelines in association with the most recent thickness measurements and findings from survey.

2. In addition to other of these Rules requirements, the assessment of the transverse corrugated bulkhead in compliance with the requirements of the present Guidelines shall take into account the following:

.1 scantlings of individual vertical corrugations shall be assessed for renewal/reinforcement based on thickness measurements obtained in accordance with Appendix 5.9-3 at their lower end, at mid-depth and in way of plate thickness changes in the lower 70 %. These considerations shall take into account the provision of gussets and shedder plates and the benefits they offer, provided that they comply with the requirements of 5.9.4.2 and 5.9.6;

.2 taking into account the scantlings and arrangements of the bulkhead for each case, permissible levels of diminution shall be determined and appropriate measures taken in accordance with 5.9.6.

3. Where renewal is required, the extent of renewal shall be shown clearly in drawings. The vertical distance of each renewal zone shall be determined by considering the requirements of the present Guidelines and in general shall not be less than 15 % of the vertical distance between the upper and lower end of the corrugation, measured at the ship's centerline.

4. Where the reinforcement is accepted by adding strips, the length of the reinforcing strips shall be sufficient to allow it to extend over the whole depth of the diminished plating. In general, the width and thickness of strips shall be sufficient to comply with the requirements of the present Guidelines. The material of the strips shall be the same as that of the corrugation plating. The strips shall be attached to the existing bulkhead plating by continuous fillet welds. The strips shall be suitably tapered or connected at ends in accordance with the existing practice.

5. Where reinforcing strips are connected to the inner bottom or lower stool shelf plates, one side full penetration welding shall be used. When reinforcing strips are fitted to the corrugation flange and are connected to the lower stool shelf plate, they shall be normally aligned with strips of the same scantlings welded to the stool side plating and having a minimum length equal to the breadth of the corrugation flange.

6. Fig. 1 gives a general arrangement of structural reinforcement.

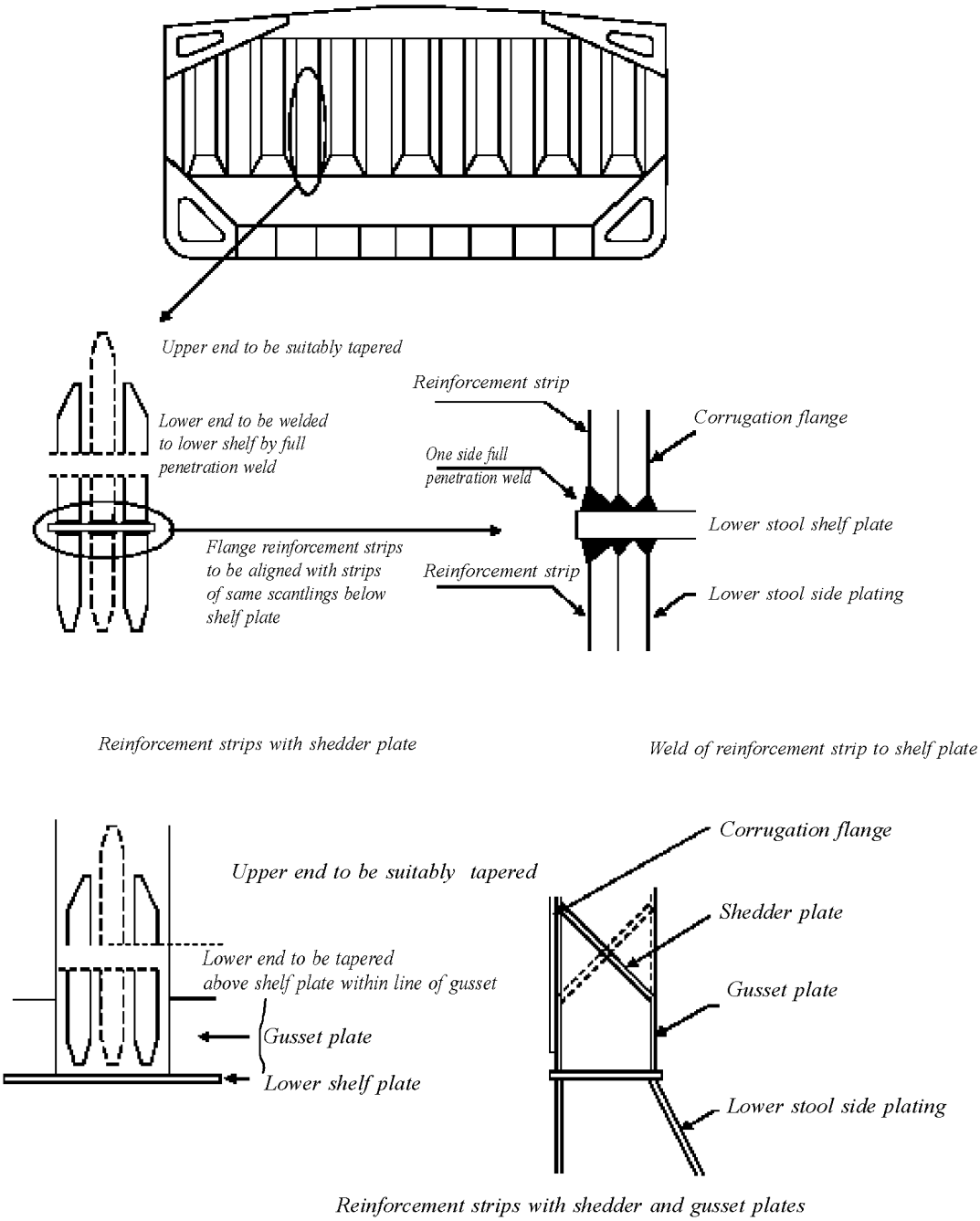

Fig. 1
General arrangement of the bulkhead reinforcement

N o t e s : 1. Square or trapezoidal corrugations shall be reinforced with plate strips fitted to each corrugation flange sufficient to meet the requirements of the present Guidelines.

2. The number of strips fitted to each corrugation flange shall be sufficient to meet the requirements of the present Guidelines.

3. Shedder plates may be fitted in one piece or prefabricated with a welded knuckle (gusset plate).

4. Gusset plates, where fitted, shall be welded to the shelf plate in line with the flange of the corrugation, to reduce the stress concentrations at the corrugation corners. Ensure good alignment between gusset plate, corrugation flange and lower stool sloping plate. Use deep penetration welding

at all connections. Ensure start and stop of welding is as far away as practically possible from corners of corrugation.

5. Shedder plates shall be attached by one-side full penetration welds onto backing bars.

6. Shedder and gusset plates shall have a thickness equal to or greater than the original bulkhead thickness. Gusset plate shall have a minimum height (on the vertical part) equal to half of the width of the corrugation flange. Shedders and gussets shall be same material as flange material.

Appendix 5.9-3

GUIDELINES FOR THE GAUGING OF THE VERTICALLY CORRUGATED TRANSVERSE WATERTIGHT BULKHEAD BETWEEN HOLDS NOS. 1 AND 2

1. The measurement results are necessary to determine the general condition of the structure and to define the extent of possible repairs and/or reinforcement of the vertically corrugated transverse watertight bulkhead for verification of the compliance with the present Chapter.

2. Taking into account the buckling model applied in the present Chapter in evaluation of strength of the bulkhead, it is essential to determine the thickness diminution at the critical levels shown in Figs. 1 and 2.

3. The gauging shall be carried out at the levels as described below. To adequately assess the scantlings of each individual vertical corrugation, each corrugation flange, web, shedder, plate and gusset plate within each of the levels given below shall be gauged.

4. Where the thickness changes within the horizontal levels, the thinner plate shall be gauged.

5. Material of the steel renewed members and/or reinforcements shall comply with the requirements of the present Chapter.

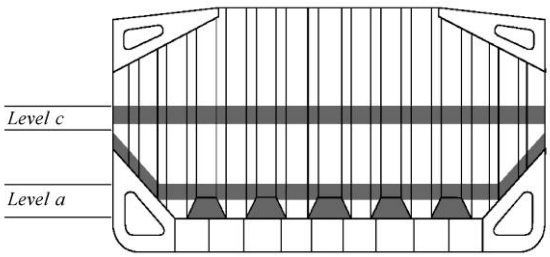

Fig. 1
Levels *a* and *c* for the gauging transverse watertight bulkhead without lower stool:

.1 location of level *a* for the transverse watertight bulkhead without lower stool:

the mid-breadth of the corrugation flanges at approximately 200 mm above the line of shedder plates;

the middle of gusset plates between corrugation flanges, where fitted;

the middle of shedder plates;

the mid-breadth of the corrugation webs at approximately 200 mm above the line of shedder plates;

.2 location of level *c* for the transverse watertight bulkhead with or without lower stool:

the mid-breadth of the corrugation flanges and webs at about the mid-height of the corrugation span.

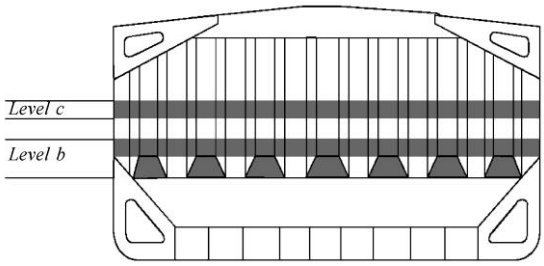

Fig. 2
Levels *b* and level *c* for the gauging transverse watertight bulkhead with lower stool:

.1 location of level *b* for the transverse watertight bulkhead with lower stool:

the mid-breadth of the corrugation flanges at approximately above the line of shedder plates;

the middle of the gusset plates between corrugation flanges, where fitted;

the middle of the shedder plates;

the mid-breadth of the corrugation webs at approximately 200 mm above the line of shedder plates.

.2 location of level *c* for the transverse watertight bulkhead with or without lower stool:

the mid-breadth of the corrugation flanges and webs at about the mid-height of the corrugation span.

5.10 EVALUATION OF ALLOWABLE HOLD LOADING OF CARGO HOLD WITH CARGO HOLD NO. 1 (IACS UR S22)

5.10.1 Application and definitions.

5.10.1.1 These requirements apply to all bulk carriers of 150 m in length and above, in the foremost hold, intending to carry solid bulk cargoes having a density of 1,78 t/m^3 and above, with single deck, topside tanks and hopper tanks, where:

.1 the foremost hold is bounded by the side shell only for ships, which were contracted for construction prior to 1 July 1998;

.2 the foremost hold is double side skin construction less than 760 mm breadth measured perpendicular to the side shell in ships, the keels of which were laid, or which were at a similar stage of construction, before 1 July 1999.

5.10.1.2 The existing bulk carriers, as defined in 5.10.1.1, shall comply with the present requirements at timings specified in 5.11.1.1.

5.10.1.3 The loading in cargo hold No. 1 being determined according to the requirements of 5.10.4 shall not exceed the allowable hold loading in flooded condition, using the loads given in 5.10.2 and the shear capacity of the double bottom at shear given in 5.10.3.

5.10.1.4 In no case the allowable hold loading in flooding condition shall be taken greater than the design hold loading in intact condition.

5.10.2 Load model.

5.10.2.1 General.

The loads to be considered as acting on the double bottom of hold No. 1:

are those given by the external sea pressures; and

the combination of the cargo loads with those induced by the flooding of hold No. 1.

The most severe combinations of cargo induced loads and flooding loads shall be used, depending on the loading conditions included in the Loading Manual:

homogeneous loading conditions;

non-homogeneous loading conditions;

packed cargo conditions (such as steel mill products).

For each loading condition, the maximum bulk cargo density to be carried shall be considered in calculating the allowable hold limit.

5.10.2.2 Inner bottom flooding head.

The flooding head h_f (refer to Fig. 5.10.2.2) is the distance, in m, measured vertically with the ship in the upright position, from the inner bottom to a level located at a distance *df*, in m, from the baseline equal to:

in general — *D*;

for ships less than 50000 gross tones deadweight with Type B freeboard — 0,95*D*

where *D* is the distance, in m, from the baseline to the freeboard deck at side amidships (refer to Fig. 5.10.2.2).

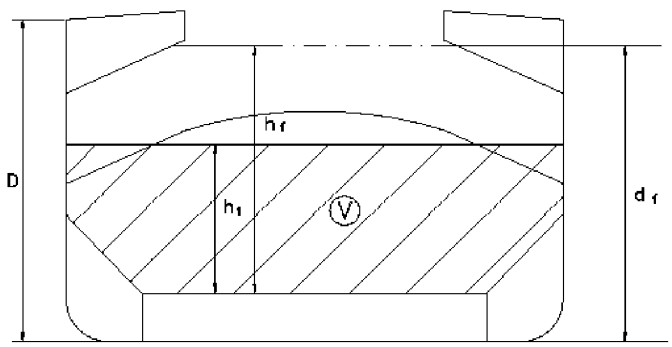

Fig. 5.10.2.2
Sketch of hold loading (V = volume of cargo, in m^3)

5.10.3 Shear capacity of the double bottom of hold No. 1.

The shear capacity *C* of the double bottom of hold No. 1 is defined as the sum of the shear strength at the beam sections at each end of:

all floors adjacent to both hoppers;

less one half of the strength of the two floors adjacent to each stool, or transverse bulkhead if no stool is fitted (refer to Fig. 5.10.3);

all double bottom girders adjacent to both stools, or transverse bulkhead if no stool is fitted.

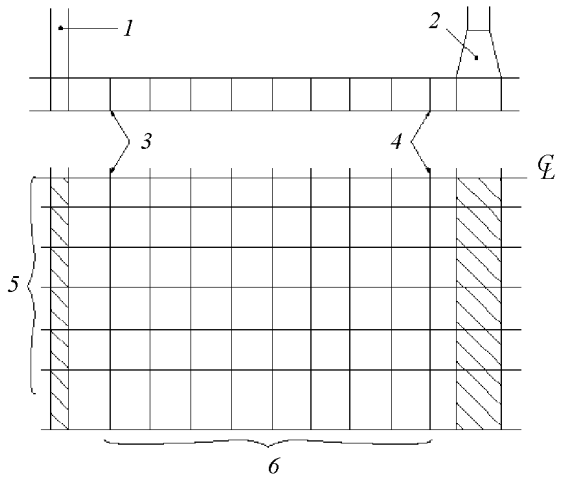

Fig. 5.10.3
Bottom structures of the cargo hold:
1 — lower stool; *2* — transverse bulkhead; *3* — floor adjacent to the stool;
4 — floor adjacent to the transverse bulkhead; *5* — girders; *6* — floors

The strength of girders or floors, which run out and are not directly attached to the boundary stool or hopper girder, shall be evaluated for the one end only.

The floors and girders to be considered are those inside the hold boundaries formed by the hoppers and stools (or transverse bulkheads if no stool is fitted). The hopper side girders and the floors directly below the connection of the bulkhead stools (or transverse bulkheads if no stool is fitted) to the inner bottom shall not be included.

Where the geometry and/or the structural arrangement of the double bottom are such to make the above assumptions inadequate, the shear capacity *C* of the double bottom shall be calculated according to the criteria agreed with the Register.

In calculating the shear strength, the net thickness of floors and girders shall be used. The net thickness t_{net}, in mm, shall be determined by the formula

$$t_{net} = t - t_c \qquad (5.10.3)$$

where t = as-built thickness, in mm, of floors and girders;
t_c = corrosion diminution, equal to 2 mm, in general; a lower value of t_c may be adopted, provided that measured are taken, in compliance with the Register requirements, to justify the assumption made.

5.10.3.1 Floor shear strength.

The floor shear strength in way of the floor panel section adjacent to hoppers S_{f1}, in kN, and the floor shear strength in way of the openings in the outermost bay (i.e. that bay, which is closest to hopper) S_{f2}, in kN, shall be determined by the following expressions:

$$S_{f1} = 10^{-3} A_f \frac{\tau_\alpha}{\eta_1}; \qquad (5.10.3.1\text{-}1)$$

$$S_{f2} = 10^{-3} A_{f,h} \frac{\tau_\alpha}{\eta_2} \qquad (5.10.3.1\text{-}2)$$

where A_f = sectional area, in mm^2, of the floor panel adjacent to hoppers;
$A_{f,h}$ = net sectional area, in mm^2, of the floor panels in way of the openings in the outermost bay (i.e. that bay, which is closest to hopper);
τ_α = allowable shear stress, in N/mm^2, to be taken equal to $\sigma_F/\sqrt{3}$;
σ_F = minimum upper yield stress, in N/mm^2, of the material;
η_1 = 1,10;
η_2 = 1,20.

Factor η_2 may be reduced, to the Register discretion, down to 1,10, where appropriate reinforcements are fitted to meet the Register requirements.

5.10.3.2 Girder shear strength.

The girder shear strength in way of the girder panel adjacent to stools (or the transverse bulkheads, if no stool is fitted) S_{g1}, in kN, and the girder shear strength in way of the largest opening in the outermost bay(i.e. the bay, which is closest to stool orthe transverse bulkhead, ifno stoolis fitted) S_{g2}, inkN, shall be determined by the following expressions:

$$S_{g1} = 10^{-3} A_g \frac{\tau_\alpha}{\eta_1} \qquad (5.10.3.2\text{-}1)$$

$$S_{g2} = 10^{-3} A_{g,h} \frac{\tau_\alpha}{\eta_2} \qquad (5.10.3.2\text{-}2)$$

where A_g = minimum sectional area, in mm^2, of the girder panel adjacent to stools (or transverse bulkheads, if no stool is fitted);
$A_{g,h}$ = net sectional area, in mm^2, of the girder panel in way of the largest opening in the outermost bay (i.e. that bay, which is closest to stool or transverse bulkhead, if no stool is fitted);
τ_α = allowable shear stress, in N/mm^2, as given in 5.10.3.1;
η_1 = 1,10;
η_2 = 1,15.

Factor η_2 may be reduced, to the Register discretion, down to 1,10 where appropriate reinforcements are fitted to meet the Register requirements.

5.10.4 Allowable hold loading.

The allowable hold loading W, in t, shall be determined by the formula

$$W = \rho_c V \frac{1}{F} \qquad (5.10.4\text{-}1)$$

where F = 1,05 in general;
F = 1,00 for steel products;
ρ_c = cargo density, in t/m^3, for bulk cargoes, refer to 5.10.2.1; for steel products ρ_c shall be taken as the density of steel;
V = volume, in m^3, occupied by cargo at a level h_1 determined by the formula $h_1 = X/(\rho_{cg})$;
X = for bulk cargoes, the lesser of X_1 and X_2, determined by the formulae:

$$X_1 = \frac{Z+\rho g(E-h_f)}{1+\frac{\rho}{\rho_c}(perm-1)}; \qquad (5.10.4\text{-}2')$$

$$X_2 = Z + \rho g(E - h_f\, perm); \qquad (5.10.4\text{-}3')$$

For steel products X may be taken equal to X_1 at $perm$ = 0;

ρ = sea water density, in t/m^3;
g = 9,81 m/s^2, gravity acceleration;
E = ship's draught in flooded condition, (d_f – 0,1D), in m;
d_f, D = as given in 5.10.2.2;
h_f = flooding head, in m (refer to 5.10.2.2);
$perm$ = permeability of cargo, to be taken as 0,3 for ore (corresponding bulk cargo density for iron ore may generally be taken 3,0 t/m^3);
Z = the lesser of Z_1 and Z_2 determined by the formulae:

$$Z_1 = C_h/A_{DB,h}; \qquad (5.10.4\text{-}4)$$

$$Z_2 = C_e/A_{DB,e}; \qquad (5.10.4\text{-}5)$$

C_h = shear capacity of the double bottom, in kN, as defined in 5.10.3, considering, for each floor, the lesser of the shear strength S_{f1} or S_{f2} (refer to 5.10.3.1); and, for each girder, the lesser of the shear strengths S_{g1} and S_{g2} (refer to 5.10.3.2);
C_e = shear capacity of the double bottom, in kN, as defined in 5.10.3, considering, for each floor, the shear strength S_{f1} (refer to 5.10.3.1) and S_{f2}, for each girder, the lesser of the shear strengths S_{g1} and S_{g2} (refer to 5.10.3.2):

$$A_{DB,h} = \sum_{i=1}^{i=n} S_i B_{DB,i}; \qquad (5.10.4\text{-}6)$$

$$A_{DB,e} = \sum_{i=1}^{i=n} S_i (B_{DB} - S_l); \qquad (5.10.4\text{-}7)$$

n = number of floors between stools (or the transverse bulkheads, if no stools are fitted);
S_i = space of i-th floor, in m;
$B_{DB,i}$ = $B_{DB} - S_i$ — for floors whose shear strength is given by S_{f1} (refer to 5.10.3.1);
$B_{DB,i}$ = $B_{DB,h}$ — for floors whose shear strength is given by S_{f2} (refer to 5.10.3.1);
B_{DB} = breadth of double bottom, in m, between hoppers (refer to 5.10.4);
$B_{DB,h}$ = distance, in m, between the two considered openings (refer to 5.10.4);
s_i = spacing, in m, of double bottom longitudinals adjacent to hoppers.

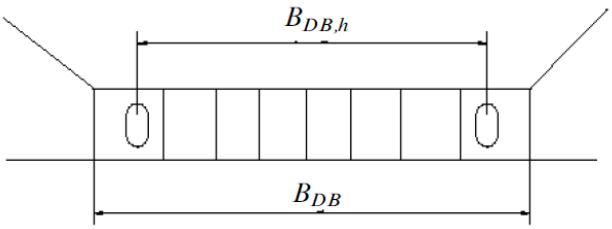

Fig. 5.10.4
Sketch of the floor in way of cargo hold

5.11 EVALUATION OF EMERGENCY STABILITY WITH CARGO HOLD NO. 1 FLOODED (IACS UR S23)

5.11.1 Application and implementation timetable.

5.11.1.1 The requirements to the bulkhead scantlings between cargo holds Nos. 1 and 2 stated in 5.9, as well as the requirements to the allowable hold loading of hold No. 1 given in 5.10, shall be applied in conjunction with the damage stability requirements set forth in 5.11.2. Bulk carriers shall be surveyed for compliance with the above mentioned requirements in terms mentioned below depending on their age as on 1 July 1998:

.1 for ships of 20 years of age and over, by the due date of the first intermediate, or the due date of the first special survey to be held after 1 July 1998, whichever comes first;

.2 for ships of 15 years of age and over but less than 20 years of age, by the due date of the first special survey to be held after 1 July 1998, but not later than 1 July 2002;

.3 for ships of 10 years of age and over, but less than 15 years of age, by the due date of the first intermediate or the due date of the first special survey to be held after the date, on which the ship reaches 15 years of age, but not later than the date, on which the ship reaches 17 years of age;

.4 for ships of 5 years of age and over, but less than 10 years of age, by the due date, after 1 July 2003, of the first intermediate or the first special survey after the date, on which the ship reaches 10 years of age, whichever comes first;

.5 for ships less than 5 years of age, by the date, on which the ship reaches 10 years of age.

5.11.1.2 Completion prior to 1 July 2003 of an intermediate or special survey with a due date after 1 July 2003 cannot be used to postpone compliance. However, prior to 1 July 2003 of an intermediate survey, the window for which straddles 1 July 2003 can be accepted.

5.11.2 Damage stability.

5.11.2.1 Ships, which are subject to compliance with the requirements of 5.9 and 5.10, when loaded to the summer load line, shall be able to withstand flooding of the foremost cargo hold in all loading conditions and remain afloat in a satisfactory condition of equilibrium, as specified in 5.2, Part V "Subdivision" of the Rules for the Classification and Construction of Sea-Going Ships.

5.11.2.2 A ship having been built with an insufficient number of transverse watertight bulkheads to satisfy this requirement may be exempted from the application of provisions 5.11.2.1, as well as 5.9 and 5.10, provided the ship fulfills the requirements of 5.2.3, Part V "Subdivision" of the Rules for the Classification and Construction of Sea-Going Ships.

5.12 EVALUATION OF THE CONDITION OF FRAMES AND FRAME BRACKETS OF CARGO HOLDS (IACS UR S31)

5.12.1 Application and definitions.

5.12.1.1 These requirements shall apply to side shell frames and brackets of cargo holds on board the bulk carriers constructed with single deck, topside tanks and hopper tanks in cargo spaces, which were contracted for construction prior to 1 July 1998 and built in non-compliance with the requirements in Part II "Hull" of the Rules for the Classification and Construction of Sea-Going Ships in force after 1 July 1998.

5.12.1.2 In addition, these requirements also apply to side shell frames and brackets of cargo holds on board the oil/bulk/ore (**OBO**) carriers of single side skin construction.

5.12.1.3 Where one or more cargo holds on a ship are in non-compliance with the above-mentioned definitions, these requirements do not apply to these specific holds.

5.12.1.4 For the purposes of this Chapter, the term "ship" means bulk carriers and **OBO** carriers, unless otherwise specified.

5.12.1.5 Bulk carriers subject to these requirements shall be assessed for compliance with these requirements, and renewal, reinforcement or coating of the side shell frames and brackets, in accordance with these requirements, shall be carried out in accordance with the following schedule depending on their age as on 1 January 2004:

.1 for bulk carriers of 15 years of age and over, by the due date of the first intermediate or special survey after 1 January 2004;

.2 for bulk carriers of 10 years of age and over, but less than 15 years of age, by the due date of the first special survey after 1 January 2004;

.3 for bulk carriers less than 10 years of age, by the date, on which the ship reaches 10 years of age.

Completion prior to 1 January 2004 of an intermediate or special survey with a due date after 1 January 2004, cannot be used to postpone compliance. However, completion prior to 1 January 2004 of an intermediate survey, the window for which straddles 1 January 2004, can be accepted.

5.12.1.6 **OBO** carriers subject to these requirements shall be assessed for compliance with these requirements and renewal, reinforcement or coating side shell frames and brackets, where required in accordance with these requirements, shall be carried out in accordance with the following schedule depending upon their age as on 1 July 2005:

.1 for **OBO** carriers of 15 years of age and over, by the due date of the first intermediate or special survey after 1 July 2005;

.2 for **OBO** carriers of 10 years of age and over but less than 15 years of age, by the due date specified of the first special survey after 1 July 2005;

.3 for **OBO** carriers less than 10 years of age, by the date, on which the ship reaches 10 years of age.

Completion prior to 1 July 2005 of an intermediate or special survey with a due date after 1 July 2005 cannot be used to postpone compliance. However, completion prior to 1 July 2005 of an intermediate survey, the window for which straddles 1 July 2005, can be accepted.

5.12.1.7 These requirements define renewal criteria or other measures to be taken for the webs and flanges of frames and end brackets as per 5.12.2.

5.12.1.8 Reinforcing measures of side shell frames are defined in 5.12.2.3.

5.12.1.9 Finite element or other numerical analysis or direct calculation procedures cannot be used as an alternative to compliance with these requirements, except in cases of unusual side structure arrangements or framing to which these requirements cannot be directly applied. In such cases, the analysis criteria and the strength check criteria shall be in accordance with the Rules for Construction.

5.12.1.10 Additional thickness measurements of side shell frames and brackets of cargo holds shall be carried out in compliance with the Guidelines given in Appendix 5.12.

5.12.2 Ice strengthened ships.

5.12.2.1 Where ship is reinforced to comply with an ice class notation, the intermediate frames shall not be included when considering compliance with these requirements.

5.12.2.2 Allowable residual thickness of additional structures required to meet the ice strengthening notation shall be determined in compliance with Annex 2 to the Rules.

5.12.2.3 If the ice class notation is requested to be withdrawn, the additional ice strengthening structure shall not be considered to contribute to compliance with these requirements.

5.12.3 Renewal, repair or other measures.

5.12.3.1 Criteria for renewal, repairs or other measures.

5.12.3.1.1 Symbols used in 5.12.3.1:

t_M = thickness as measured, in mm;

t_{REN} = thickness, at which renewal is required (refer to 5.12.3.1.2);

$t_{REN,\ d/t}$ = thickness criteria based on d/t ratio (refer to 5.12.3.1.2.1);

$t_{REN,\ S}$ = thickness criteria based on strength (refer to 5.12.3.1.2.1);

t_{COAT} = thickness to be taken equal to 0,75 t_{s12};

t_{s12} = thickness, in mm, of frame webs as required by 3.3.4.4.1, Part II "Hull" of the Rules for the Classification and Construction of Sea-Going Ships, and thickness of the lower bracket webs as required by 3.3.4.4.2, the same Part of the Rules;

t_{AB} = as-built thickness, in mm;

t_C = thickness given in Table 5.12.3.1.1.

Table 5.12.3.1.1

Thickness t_C, in mm

Ship length *L*, in m	All holds except hold No.1		Hold No.1	
	Frame span and upper brackets	Lower brackets	Frame span and upper brackets	Lower brackets
≤ 100	2,0	2,5	2,0	3,0
150	2,0	3,0	3,0	3,5
≥ 200	2,0	3,0	3,0	4,0
Note. Value t_C for the intermediate length of the ship shall be defined by linear interpolation of values given in the Table.				

5.12.3.1.2 Criteria of evaluation for side shell frames and brackets.

5.12.3.1.2.1 The webs of side shell frames and brackets (brackets or knees, hereinafter referred to as "brackets") shall be renewed when the measured thickness t_M is equal to or less than the thickness t_{REN}, which is the greatest of the following values:

$t_{COAT} - t_C$;

0,75 t_{AB};

$t_{REN,\ d/t}$ = applicable to areas *(A)* and *(B)* only (refer to Fig. 5.2.3.2-2);

$t_{REN,\ S}$ = where required by 5.12.3.1.2.1.2:

5.12.3.1.2.1.1 The thickness $t_{REN,\ d/t}$ based on *d/t* ratio.

The thickness $t_{REN,\ d/t}$ shall be determined by the following formula with due regard to the requirements of 5.12.3.1.2.1.1.1.2 and 5.12.3.1.2.1.1.1.3:

$t_{REN,\ d/t}$ = (web depth, in mm)/*R*

where for frames: $R = 0{,}65k^{0.5}$ — for symmetrically flanged frames;

$R = 0{,}55k^{0,5}$ — for asymmetrically flanged frames;

for lower brackets with due regard to the requirements of 5.12.3.1.2.1.1:

$R = 0{,}87\ k^{0,5}$ — for symmetrically flanged frames;

R	=	0,73 $k^{0,5}$ — for asymmetrically flanged frames;
k	=	1,0 — for steel with yield point 235 MPa;
k	=	0,78 — for steels with yield point 315 MPa;
k	=	0,72 — for steels with yield point 355 MPa.

In no instance shall $t_{REN,\ d/t}$ for lower integral brackets to be taken as less than $t_{REN,\ d/t}$ for the frames they support.

5.12.3.1.2.1.1.1 Lower brackets.

The lower brackets shall be flanged or face plate shall be fitted.

The web depth of the lower brackets shall be determined as follows:

the web depth of the lower bracket may be measured from the intersection of the sloped bulkhead of the hopper tank and the side shell plate, perpendicularly to the face plate of the lower bracket (refer to Fig. 5.12.3.1.2-1);

where stiffeners are fitted on the lower bracket plate, the web depth may be taken as the distance between the side shell and the stiffener, between the stiffeners or between the outermost stiffener and the face plate of the brackets, whichever is the greatest.

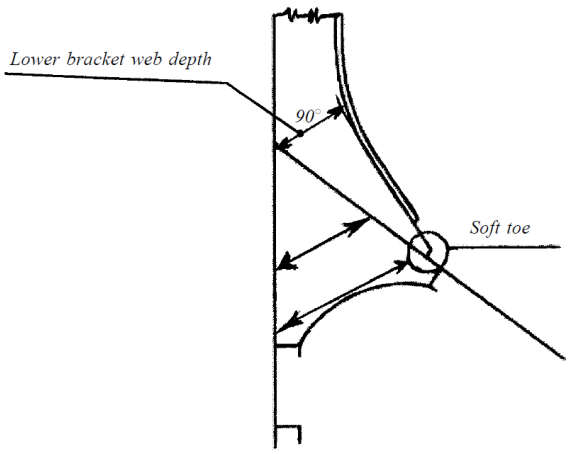

Fig. 5.12.3.1.2-1
Lower bracket web depth for determining $t_{REN,\ d/t}$

5.12.3.1.2.1.1.2 Tripping brackets alternative.

When t_M is less than $t_{REN,\ d/t}$ at section *b* of the frames (refer to Fig. 5.12.3.1.2-2), tripping brackets in accordance with 5.12.3.3 may be fitted as an alternative to the requirements for the web depth to thickness ratio of frames, in which case $t_{REN,\ d/t}$ may be disregarded in the determination of t_{REN} in accordance with 5.12.3.1.2.

Value of t_M shall be based on zone *B* in accordance with Fig. 5.2.3.2-2.

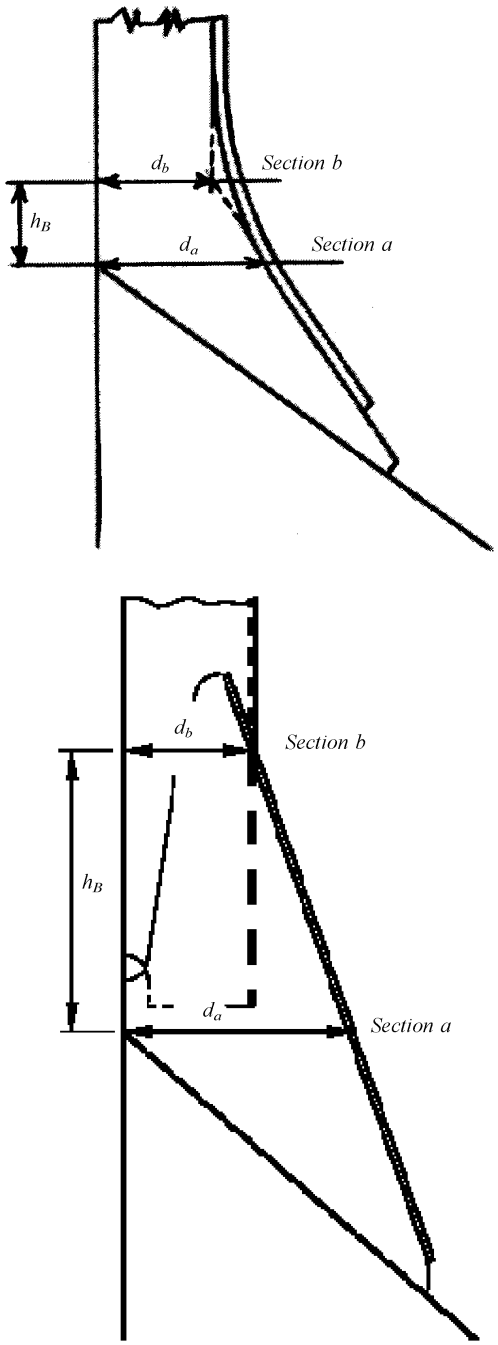

Fig. 5.12.3.1.2-2
Sections a and b d_a — lower bracket web depth;
d_b — frame web depth; h_B — lower bracket length

5.12.3.1.2.1.1.3 Immediately abaft collision bulkhead.

When the web as-built thickness t_{AB}, including lower end brackets, is greater than 1,65$t_{REN,\,S}$, the thickness $t_{REN,\,d/t}$ may be taken as the value $t'_{REN,\,d/t}$, determined by the formula

$$t'_{REN,d/t} = \sqrt[3]{t^2_{REN,d/t}\, t_{REN,S}}$$

where $t_{REN,\,S}$ = thickness to be determined according to 5.12.4.3.

5.12.3.1.2.1.2 Thickness $t_{REN,\,S}$ based on shear strength check.

Where web thickness t_M in the lower part of side shell frames, as defined in Fig. 5.12.3.1.2-2, is equal to or less than t_{COAT}, $t_{REN,S}$ shall be determined in accordance with 5.12.4.3.

5.12.3.1.2.1.3 Thickness of renewed webs of frames and lower brackets.

Where renewal is required, the renewed webs shall be of a thickness not less than t_{AB} or 1,2t_{COAT}, or 1,2t_{REN}, whichever is greater.

5.12.3.1.2.1.4 Criteria for other measures.

When $t_{REN} < t_M \leq t_{COAT}$, measures shall be taken, consisting of all the following:

.1 sand blasting, or equivalent, and coating (refer to 5.12.3.2);

.2 fitting tripping brackets (refer to 5.12.3.3), when condition 5.12.3.1.2.1.4.1 occurs for any of the side frame zones *A*, *B*, *C* and *D*, shown in Fig. 5.2.3.2-2. Tripping brackets not connected to flanges shall have soft toe, and the distance between the bracket toe and the frame flange shall not be greater than about 50 mm, refer to Fig. 5.12.3.3.1);

.3 maintaining the coating in "as-new" condition (i.e. without breakdown or rusting) at special and intermediate surveys.

The above measures may be waived if the structural members show no thickness diminution with respect to the as built thicknesses and coating is in "as-new" condition (i.e. without breakdown or rusting).

When the measured frame webs thickness t_M is such that $t_{REN} < t_M \leq t_{COAT}$ and the coating is in GOOD condition, sand blasting and coating as required in 5.12.3.1.2.1.4.1 above may be waived even if not found in "as-new" condition, as defined above, provided that tripping brackets are fitted and the coating damaged in way of the tripping bracket welding is repaired.

5.12.3.1.3 Criteria for frames and brackets (bending check).

When lower end brackets were not fitted with flanges at the design stage, flanges shall be fitted so as to meet the bending strength requirements in 5.12.4.4. The full width of the bracket flange shall extend up beyond the point at which the frame flange reaches full width. Adequate back-up structure in the hopper shall be ensured, and the bracket shall be aligned with the back-up structure.

Where the length or depth of the lower bracket does not meet the requirements in 3.3.2.5.3, Part II "Hull", of the Rules for the Classification and Construction of Sea-Going Ships, a bending strength check in accordance with 5.12.4.4 shall be carriedoutand renewals or reinforcements of frames and/or brackets effected as required therein.

The bending check needs not to be carried out in the case the bracket geometry is modified so as to comply with the requirements of 3.3.2.5.3, Part II "Hull" of the Rules for the Classification and Construction of Sea-Going Ships.

5.12.3.2 Thickness measurements, renewal, sand blasting and coating.

5.12.3.2.1 For the purpose of renewal, sand blasting and coating, four areas *A*, *B*, *C* and *D* are defined (refer to Fig. 5.2.3.2-2). When renewal shall be carried out, surface preparation and coating are required for the renewed structures as given in 3.3.5.1, Part II

"Hull" of the Rules for the Classification and Construction of Sea-Going Ships for cargo holds of new buildings.

5.12.3.2.2 Thickness measurements shall be taken for each area and shall be assessed against the criteria in 5.12.3.1.

5.12.3.2.3 When zone *B* is made up of different plate thicknesses, the lesser thickness shall be used for the application of the requirements of this Section.

5.12.3.2.4 In case of integral brackets, when the criteria in 5.12.3.1 are not satisfied for areas *A* or *B*, renewal, sand blasting and coating, as applicable, shall be done for both areas *A* and *B*.

5.12.3.2.5 In case of separate brackets, when the criteria in 5.12.3.1 are not satisfied for area *A* or *B*, renewal, sand blasting and coating shall be done for each one of these zones, as applicable.

5.12.3.2.6 When renewal is required for area *C* according to 5.12.3.1, it shall be done for both areas *B* and *C.* When sand blasting and coating is required for area *C* according to 5.12.3.1, it shall be done for areas *B*, *C* and *D*.

5.12.3.2.7 When renewal is required for area *D* according to 5.12.3.1, it needs only to be done for this area. When sand blasting and coating is required for area *D* according to 5.12.3.1, it shall be done for both areas *C* and *D*.

5.12.3.2.8 Special consideration may be given to areas previously renewed or re-coated, if found in "as-new" condition (i.e., without breakdown or rusting).

5.12.3.2.9 When adopted, on the basis of the renewal thickness criteria in 5.1.2.3.1, in general, coating shall be applied in compliance with the requirements of 3.3.5.1, Part "Hull" of the Rules for the Classification and Construction of Sea-Going Ships, as applicable.

5.12.3.2.10 Where, according to the requirements in 5.12.3.1, a limited number of side shell frames and brackets are shown to require coating over part of their length, the following criteria apply:

.1 the part to be coated includes:

.1.1 the web and the face plate of the side shell frames and brackets;

.1.2 the hold surface of side shell, hopper tank and topside tank plating, as applicable, over a width not less than 100 mm from the web of the frame;

.2 epoxy coating or equivalent shall be applied.

In all cases, all the surfaces to be coated shall be sand blasted prior to coating application.

When flanges of frames or brackets shall be renewed according to these Rules, the outstanding breadth to thickness ratio shall comply with the requirements of Part "Hull" of the Rules for the Classification and Construction of Sea-Going Ships.

5.12.3.3 Reinforcing measures.

5.12.3.3.1 Reinforcing measures are constituted by tripping brackets, located at the lower part and at midspan of side shell frames (refer to Fig. 5.12.3.3.1). These brackets may be located at every two frames, but lower and midspan brackets shall be fitted in line between alternate pairs of frames.

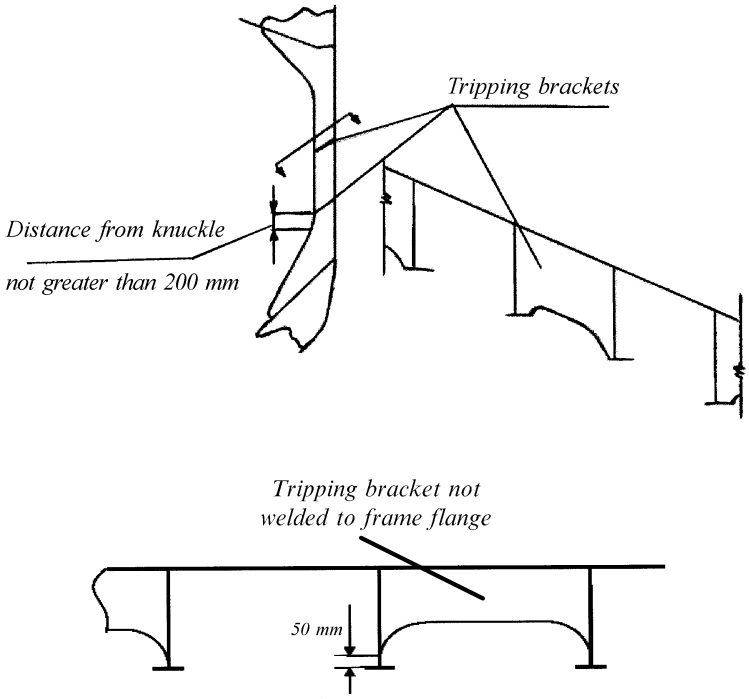

Fig. 5.12.3.3.1
Tripping brackets

5.12.3.3.2 The thickness of the tripping brackets shall not be less than the as-built thickness of the side shell frame webs, to which they are connected.

5.12.3.3.3 Double continuous welding shall be adopted for the connections of tripping brackets to the side shell frames and shell plating.

5.12.3.3.4 Where side frames and side shell are made of higher strength steel, normal strength steel tripping brackets may be accepted, provided the electrodes used for welding are those required for the particular higher strength steel grade, and the thickness of the tripping brackets is equal to the frame web thickness, regardless of the frame web material.

5.12.3.4 Weld throat thickness.

In case of renewal the welded connections shall comply with the requirements of 3.3.2.5.9, Part "Hull" of the Rules for the Classification and Construction of Sea-Going Ships.

5.12.3.5 Pitting and grooving.

5.12.3.5.1 If pitting intensity is higher than 15 % in area (refer to Fig. 5.12.3.5.1), thickness measurements shall be taken to check pitting corrosion.

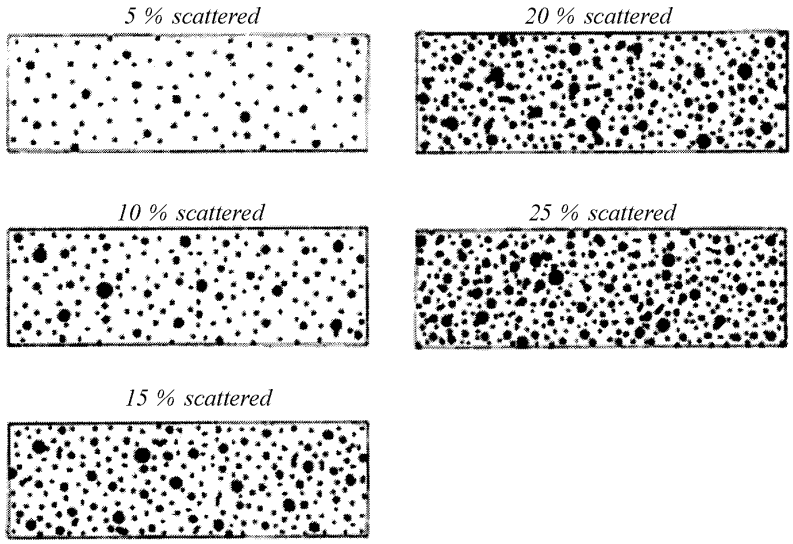

Fig. 5.12.3.5.1
Pitting intensity diagrams (5 — 25 % intensity)

5.12.3.5.2 The minimum acceptable remaining thickness in pits or grooves is equal to:

.1 75 % of the as-built thickness, for pitting or grooving in the frame and brackets webs and flanges;

.2 70 % of the as-built thickness, for pitting or grooving in the side shell, hopper tank and topside tank plating attached to the side shell frame, over a width up to 30 mm from each side of it.

5.12.3.6 Renewal of all frames in one or more cargo holds.

5.12.3.6.1 When all frames in one or more holds are required to be renewed, the compliance with the requirements of Part "Hull" of the Rules for the Classification and Construction of Sea-Going Ships may be accepted in lieu of the compliance with these requirements, provided that:

.1 it is applied at least to all the frames of the hold(s);

.2 the coating requirements for side shell frames of "new ships" according to 3.3.5.1, Part "Hull" of the Rules for the Classification and Construction of Sea-Going Ships are complied with;

.3 the section modulus of side shell frames is calculated according to Part "Hull" of the Rules for the Classification and Construction of Sea-Going Ships.

5.12.3.7 Renewal of damaged frames.

5.12.3.7.1 In case of renewal of a damaged frame already complying with the requirements of this Chapter, the following requirements apply:

.1 the conditions accepted in compliance with this Chapter shall be restored as a minimum;

.2 for localized damages, the extension of the renewal shall be carried out according to the internal normative documents on repair intended for the use of RS surveyors.

5.12.4 Strength check criteria.

In general, strength checks shall be carried out for the aft, middle and forward frames of each hold. The scantlings required for frames in intermediate positions shall be obtained by linear interpolation between the results obtained for the above frames.

When scantlings of side shell frames vary within a hold, the required scantlings shall be also calculated for the mid frame of each group of frames having the same scantlings. The

scantlings required for frames in intermediate positions shall be obtained by linear interpolation between the results obtained for the calculated frames.

5.12.4.1 Design diagram.

5.12.4.1.1 Load model.

The following loading conditions shall be considered:

.1 homogeneous heavy cargo (density greater than 1,78 t/m^3);

.2 homogeneous light cargo (density less than 1,78 t/m^3);

.3 non-homogeneous heavy cargo, if allowed.

Multi port loading/unloading conditions need not be considered.

5.12.4.1.2 Forces.

The forces $P_{fr,\,a}$ and $P_{fr,\,b}$, in kN, to be considered for the strength checks at sections *a* and *b* of side shell frames (refer to Fig. 5.12.3.1.2-2) shall be determined by the following formulae (in the case of separate lower brackets, section b is at the top of the lower bracket):

$$P_{fr,a} = P_s + max(P_1, P_2); \qquad (5.12.4.1.2\text{-}1)$$

$$P_{fr,b} = P_{fr,a}\frac{h-2h_B}{h} \qquad (5.12.4.1.2\text{-}2)$$

where P_S = still water force, in kN, to be determined by the formulae:

$P_s = sh\left(\frac{p_{S,U}+p_{S,L}}{2}\right)$ — when the upper end of the side shell frame span *h* (refer to Fig. 5.2.3.2-2) is below the load waterline;

$P_s = sh'\left(\frac{p_{S,L}}{2}\right)$ — when the upper end of the side shell frame span *h* (refer to Fig. 5.2.3.2-2) is at or above the load waterline;

$P_1 = sh\left(\frac{p_{1,U}+p_{1,L}}{2}\right)$ — wave force, in kN, in head sea;

$P_2 = sh\left(\frac{p_{2,U}+p_{2,L}}{2}\right)$ — wave force, in kN, in beam sea;

h, h_B = side shell frame span and lower bracket length, in m, respectively (refer to Fig. 5.12.3.1.2-2);

h' = distance, in m, between the lower end of side shell frame span *h* and the load waterline;

s = frame spacing, in m;

$p_{S,U}$ and $p_{S,L}$ = still water pressure, in kN/mm^2, at the upper and lower end of the side shell frame span *h*, respectively (refer to Fig. 5.2.3.2-2);

$p_{1,U}$ *and* $p_{1,\,L}$ = wave pressure, in kN/mm^2, below for the upper and lower end of side shell frame span *h*, respectively, to be determined in 5.12.4.1.3.1;

$p_{2,U}$ and $p_{2,\,L}$ = wave pressure, in kN/mm^2, below for the upper and lower end of side shell frame span h, respectively, to be determined in 5.12.4.1.3.2.

5.12.4.1.3 Wave pressure.

5.12.4.1.3.1 Wave pressure p_1, in kN/mm^2, shall be determined by the formulae:

at and below the waterline

$$p_1 = 1{,}50\left[p_{11} + 135\,\frac{B}{2(B+75)} - 1{,}2(T-z)\right] \qquad (5.12.4.1.3.1\text{-}1)$$

where p_{11}=$3k_sC + k_f$;

above the waterline

$$p_1 = p_1w_l - 7{,}50(z-T) \qquad (5.12.4.1.3.1\text{-}2)$$

where p_1w_l = wave pressure p_1 at the waterline.

5.12.4.1.3.2 Wave pressure p_2, in kN/mm^2, shall be determined by the formulae:

at and below the waterline

$$p_2 = 13{,}0\left[0{,}5B\frac{50C_r}{2(B+75)} + C_B\frac{0{,}5B+k_f}{14}\left(0{,}7+\frac{2z}{T}\right)\right] \quad (5.12.4.1.3.2\text{-}1)$$

above the waterline

$$p_2 = p_2 w_l - 5{,}0(z-T) \quad (5.12.4.1.3.2\text{-}2)$$

where $p_2 w_l$ = wave pressure p_2 at the waterline;
L = ship's length, in m;
B = greatest moulded breadth, in m;
C_B = block coefficient, as defined in the Rules for the Classification and Construction of Sea-Going Ships, but not less than 0,6;
T = maximum design draft, in m;
C = coefficient to be determined by the formulae:

$$\mathrm{C} = 10{,}75 - \left(\frac{300-L}{100}\right)^{1{,}5} \; for\ 90 \le \mathrm{L} \le 300\ \mathrm{m}$$

$$\mathrm{C} = 10{,}75 - for\ \mathrm{L} > 300\ m$$

$$\mathrm{C_r} = \left(1{,}25 - 0{,}025\frac{2\mathrm{k_r}}{\sqrt{\mathrm{GM}}}\right)\mathrm{k}$$

where *k* = 1,2 — for ships without bilge keel;
k = 1,0 — for ships with bilge keel;
k_r = roll radius of gyration. If the actual value k_r is not available, its value may be taken equal to the following:
k_r = 0,39*B* — for ships with even distribution of mass in transverse section (e.g., alternate heavy cargo loading or homogeneous light cargo loading);
k_r = 0,25*B* — for ships with uneven distribution of mass (e.g., even homogeneous heavy cargo distribution);
GM = 0,12*B* if the actual value *GM* is not available;
z = vertical distance, in m, from the baseline to the load point;

$k_s = C_B + \frac{0{,}83}{\sqrt{C_B}}$ — at aft end of *L;*

$k_s = C_B$ — between *0,2L* and *0,6L* from aft end of *L*;

$k_s = C_B + \frac{1{,}33}{C_B}$ — at forward end end of *L.*

Between the above specified points, k_s shall be interpolated linearly;

$k_f = 0{,}8C$.

5.12.4.2 Allowable stresses.

The allowable normal and shear stresses σ_a and τ_a, in N/mm^{2,} in side shell frames and brackets, shall be determined by the formulae:

$$\sigma_a = 0{,}90\sigma_F \quad (5.12.4.2\text{-}1)$$

$$a\tau_a = 0{,}40\ \sigma_F \quad (5.12.4.2\text{-}2)$$

where σ_F = the minimum upper yield stress, in N/mm^{2,} of steel.

5.12.4.3 Shear strength check.

Where t_M in the lower part of side shell frames, as defined in Fig. 5.2.3.2-2, is equal to or less than t_{COAT}, shear strength check shall be carried out in accordance with the following.

The thickness $t_{REN,S,}$ in mm, is the greater of the thicknesses $t_{REN,Sa}$ and $t_{REN,Sb}$, obtained from the shear strength check at sections *a* and *b* (refer to Fig. 5.12.3.1.2-2 and 5.12.4.1.1) given by the following, but need not be taken in excess of $0{,}75t_{S12}$:

at section *a*

$$t_{REN,Sa} = \frac{1000 k_s P_{fr,a}}{d_b \sin\phi \tau_a} \qquad (5.12.4.3\text{-}1)$$

at section *b*

$$t_{REN,Sb} = \frac{1000 k_s P_{fr,b}}{d_b \sin\phi \tau_a} \qquad (5.12.4.3\text{-}2)$$

where k_S = shear force distribution factor to be taken equal to 0,6;
$P_{fr,a}$, $P_{fr,b}$ = pressure forces determined in 5.12.4.1.1;
d_a, d_b = bracket and frame web depth, in mm, at sections *a* and *b*, respectively (refer to Fig. 5.12.3.1.2-2); in case of separate (non-integral) brackets, d_b shall be taken as the minimum web depth deducing possible scallops;
ϕ = angle between frame web and the shell plate;
τ_a = allowable shear stress, in N/mm^2, defined in 5.12.4.2.

5.12.4.4 Bending strength check.

Where the lower bracket length or depth does not meet the requirements of 3.3.2.5.3, Part "Hull" of the Rules for the Classification and Construction of Sea-Going Ships, the actual section modulus, in cm^3, of the brackets and side shell frames at sections a and b shall not be less than:

at section *a*

$$Z_a = \frac{1000 P_{fr,a} h}{m_a \sigma_a} \qquad (5.12.4.4\text{-}1)$$

at section *b*

$$Z_b = \frac{1000 P_{fr,a} h}{m_b \sigma_a} \qquad (5.12.4.4\text{-}2)$$

where $P_{fr,a}$ = pressure force defined in 5.12.4.1.1;
h = side shell frame span, in m (refer to Fig. 5.2.3.2-2);
σ_a = allowable normal stress, in N/mm^2, defined in 5.12.4.2;
m_a and m_b = bending moment coefficients defined in Table 5.12.4.4.

Table 5.12.4.4

Bending moment coefficients m_a and m_b

	m_a	m_b		
		$h_B \le 0{,}08h$	$h_B = 0{,}1h$	$h_B \ge 0{,}125h$
Empty holds of ships approved to operate in non-homogeneous loading conditions	10	17	19	22
Other cases	12	20	22	26
Notes: 1. Non-homogeneous loading condition means a loading condition, in which the ratio between the highest and the lowest filling ratio, evaluated for each hold, exceeds 1,20 corrected for different cargo densities. 2. For intermediate values of the bracket length h_B, the coefficient m_b is obtained by linear interpolation between the Table values.				

The actual section modulus of the side shell frames and brackets shall be calculated about an axis parallel to the attached plate, based on the measured thicknesses. For precalculations, alternative thickness values may be used, provided they are not less than:

.1 t_{REN}, for the web thickness;

.2 the minimum thicknesses allowed by the current RS Rules for flange and attached plating.

The attached plate breadth is equal to the frame spacing, measured along the shell at midspan of *h*.

If the actual section moduli at sections *a* and *b* are less than the values Z_a and Z_b, the side shell frames and brackets shall be renewed or reinforced in order to obtain actual section moduli not less than $1{,}2Z_a$ and $1{,}2Z_b$, respectively.

In such a case, renewal or reinforcements of the flange shall be extended over the lower part of side shell frames (refer to Fig. 5.2.3.2-2).

Appendix 5.12

GUIDELINES FOR GAUGING OF SIDE SHELL FRAMES AND BRACKETS IN SINGLE SIDE SKIN BULK CARRIERS

1 GENERAL

Gauging is necessary to determine the general condition of the structure and to define the extent of possible steel renewals or other measures for the webs and flanges side shell plating and end brackets for the verification of the compliance with the requirements of this Chapter.

2 ZONES OF SIDE SHELL FRAMES AND BRACKETS

For the purpose of steel renewal, sand blasting and coating, four areas *A, B*, *C* and *D* are defined, as shown in Fig. 5.2.3.2-2.

Areas *A* and *B* are considered to be the most critical areas.

3 PITTING AND GROOVING CORROSION

Pits can grow in a variety of shapes, some of which would need to be grounded before assessment. Pitting corrosion may be found under coating blisters, which shall be removed before inspection.

The normal ultrasonic transducer (generally 10 mm diameter) will be inadequate for thickness measurements in locations of pitting or grooving corrosion. A miniature transducer (3 — 5 mm diameter) shall be used. Alternatively the thickness measurement firm shall use a pit gauge for measuring a pit and groove depth with the follow-up calculation of the remaining thickness.

3.1 Corrosion assessment based upon area.

The method is defined in 5.12.3.5 and based upon the corrosion intensity determined in accordance with Fig. 5.12.3.5.1.

If pitting intensity is higher than 15 % in an area (refer to Fig. 5.12.3.5.1), then thickness measurements shall be taken to check the extent of pitting corrosion. The 15 % intensity is based upon pitting or grooving on only one side of the plate.

In cases where pitting is evident, as defined above (exceeding 15 %), then an area of 300 mm diameter or more (or, where this is impracticable on the frame flange or the side shell, hopper tank plating or topside tank plating attached to the side frame, equivalent rectangular area), at the most pitted part, shall be cleaned to bare metal, and the thickness measured in way of the five deepest pits within the cleaned area. The least thickness measured in way of any of these pits shall be taken as the thickness to be recorded.

The minimum acceptable remaining thickness in any pit and groove shall be assumed to be equal to:

.1 75 % of as-built thickness, for pitting or grooving in the cargo hold side frame webs and flanges and frame brackets;

.2 70 % of as-built thickness, for pitting or grooving in the side shell, hopper tank and topside tank plating attached to the cargo hold side frame, over a width up to 30 mm from each of it.

4 GAUGING METHODOLOGY

4.1 Numbers of side frames to be measured are equivalent to those of special survey or intermediate survey corresponding to the ship's age. Representative thickness measurements shall be taken for each area, as specified below.

If the structural members show no thickness diminution with respect to the as-built thickness and the coating is found in "as-new" condition (i.e., without breakdown or rusting), special consideration to the extent of the thickness measurements may be given.

Where gauging readings close to the criteria, as specified in 3.1, are found, the number of hold frames to be measured shall be increased.

If renewal or other measures according to 5.12 shall be applied on individual frames in a hold, then all frames in that hold shall be gauged.

There is a variety of a construction methods used for side shell frames in bulk carriers. Some of the frames have face plates (T-sections) on the side shell frames, some have flanged plates and some have bulb plates. The use of face plates and flanged sections is considered similar for gauging purposes in that both the web and face plate or web and flange plate shall be gauged. If bulb plate has been used, then web of the bulb plate shall be gauged in the normal manner and the sectional modulus shall be specially considered if required.

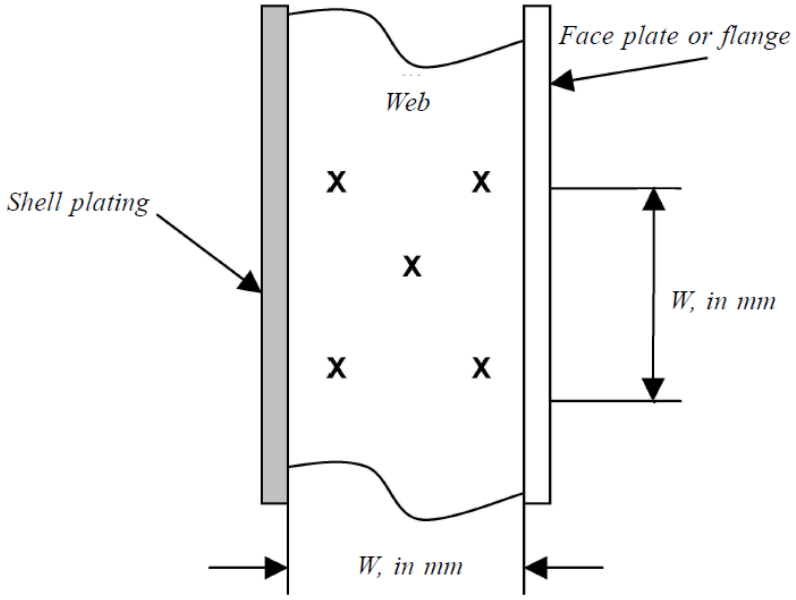

Fig.
Typical five point pattern on the web plate

4.2 Gauging for areas *A*, *B* and *D* (frame and bracket webs).

The gauging pattern for areas *A*, *B* and *D* shall be five point pattern (refer to Figure of the present Guidelines). This 5 point pattern shall be over the depth of the web and the same area vertically. The gauging report shall reflect the average reading.

4.3 Gauging for area *C* (frame webs).

Depending upon the condition of the web in way of area *C,* the web may be measured by taking 3 readings over the length of area *C* and averaging them. The average reading shall be compared with the five point pattern as noted above.

4.4 Gauging for sections a and b (flanges and side plating).

Where the lower bracket length or depth does not meet the requirements of Part II "Hull" of the current Rules for the Classification and Construction of Sea-Going Ships, gauging shall be taken at sections *a* and *b* to calculate the actual section modulus required in 5.12.4.4 (refer to Fig. 5.12.3.1.2-2). At least 2 readings on the flange/face plate shall be taken in way of each section. At least one reading of the attached shell plating shall be taken on each side of the frame (i.e. fore and aft) in way section *a* and section *b*.

5 REPORT ON THICKNESS MEASUREMENT OF CARGO HOLD FRAMES

Report for recording the thickness measurements of cargo hold frames shall be prepared in the tabular form given below.

Отчет по замерам толщин шпангоутов грузовых трюмов
Report on Thickness Measurement of Cargo Hold Side Frames

Название судна
Ship's Name _____ РС № *RS No.* _____

							Грузовой трюм № ***Cargo Hold No.***						**Борт:** ***Side:***						**(ПБ/ЛБ)** ***(Port/Stbd.)***					
Шп. № *Frame No.*	Зона "A" *Zone "A"*						Зона "B" *Zone "B"*						Зона "C" *Zone "C"*						Зона "D" *Zone "D"*					
	Постр. толщина г *Original thickness*	t_{REN}	t_{COAT}	t_M	Уменьшение *Diminution*		Постр. толщина г *Original thickness*	t_{REN}	t_{COAT}	t_M	Уменьшение *Diminution*		Постр. толщина г *Original thickness*	t_{REN}	t_{COAT}	t_M	Уменьшение *Diminution*		Постр. толщина г *Original thickness*	t_{REN}	t_{COAT}	t_M	Уменьшение *Diminution*	
	mm	mm	mm	mm	mm	%	mm	mm	mm	mm	mm	%	mm	mm	mm	mm	mm	%	mm	mm	mm	mm	mm	%

Подпись оператора
Operator's Signature _____

5.13 EVALUATION OF CARGO HATCH COVER SECURING ARRANGEMENTS (IACS UR S30)

5.13.1 Application.

5.13.1.1 These requirements apply for steel hatch cover securing devices and stoppers for cargo hold hatchways No. 1 and No. 2, which are wholly or partially within 0,25*L* of the fore perpendicular in all bulk carriers having a single deck, topside and hopper tanks in the cargo area (except pontoon type hatch covers) contracted for the construction prior to 1 January 2004, and which were not built in compliance with the requirements of Part II "Hull" of the Rules for the Classification and Construction of Sea-Going Ships effective after 1 January 2004.

5.13.1.2 Bulk carriers subject to these requirements shall comply with these requirements in accordance with the following schedule, depending on their age as on 1 January 2004:

.1 for bulk carriers of 15 years of age and over, by the due date of the first intermediate or special survey after 1 January 2004;

.2 for bulk carriers of 10 years of age and over, but less than 15 years, by the due date of the first special survey after 1 January 2004;

.3 for bulk carriers less than 10 years of age, by the date, on which the ship reaches 10 years of age.

5.13.1.3 Completion prior to 1 January 2004 of an intermediate or special survey with a due date after 1 January 2004 cannot be used to postpone compliance. However, completion prior to 1 January 2004 of an intermediate survey, the window for which straddles 1 January 2004, can be accepted.

5.13.2 Securing devices.

5.13.2.1 The strength of securing devices shall comply with the following requirements:

.1 panel hatch covers shall be secured and closed by appropriate devices (bolts, wedges or similar) suitably spaced alongside the coamings and between cover elements.

Arrangement and spacing shall be determined with due attention to the effectiveness for weathertightness, depending upon the type and the size of the hatch cover edges between the securing devices;

.2 the net sectional area A, in cm^2, of each securing device shall not be less than determined by the formula

$$\mathrm{A} = 1{,}4\mathrm{a}/\mathrm{f}$$

where a = spacing between securing devices shall not be taken less than 2 m; at that $\mathrm{f} = (\sigma_Y/235)^{\mathrm{e}}$;

σ_Y = specified minimum upper /mm^2, of the steel used for fabrication, not to be taken greater than 70 % of the ultimate tensile strength;

e = 0,75 for $\sigma_Y > 235$;

e = 1,0 for $\sigma_Y \leq 235$.

Rods or bolts (not taking into account corrosion and wear) shall have a net diameter not less than 19 mm for hatchways exceeding 5 m^2 in area;

.3 between cover and coamings and at cross-joints, a packing line pressure sufficient to obtain weather tightness shall be maintained by the securing devices.

For packing line pressures exceeding 5 N/mm, the cross section area shall be increased in direct proportion. The packing line pressure shall be specified;

.4 the cover edge stiffness shall be sufficient to maintain adequate sealing pressure between securing devices. The moment of inertia I, in cm^4, of edge elements shall not be less than

$$I = 6pa^4$$

where p = packing line pressure, in N/mm, minimum 5 N/mm;
a = spacing, in m, of securing devices;

.5 securing devices shall be of reliable construction and securely attached to the hatchway coamings, decks or covers. Individual securing devices on each cover shall have approximately the same stiffness characteristics;

.6 where rod cleats are fitted, resilient washers or cushions shall be incorporated;

.7 where hydraulic cleating is adopted, a positive means shall be provided to ensure that it remains mechanically locked in the closed position in the event of failure of the hydraulic system.

5.13.3 Stoppers.

5.13.3.1 Nos. 1 and 2 hatch covers shall be effectively secured, by means of stoppers, against the transverse forces arising from a pressure of 175 kN/m^2.

5.13.3.2 No. 2 hatch covers shall be effectively secured, by means of stoppers, against the longitudinal forces acting on the forward end arising from a pressure of 175 kN/m^2.

5.13.3.3 No. 1 hatch covers shall be effectively secured, by means of stoppers, against the longitudinal forces acting on the forward end arising from a pressure of 230 kN/m^2. This pressure may be reduced to 175 kN/m^2 if a forecastle is fitted.

5.13.3.4 The stresses in stoppers and their supporting structures, as well as calculated in the throat of the stopper welds shall not exceed the allowable value of $0{,}8\sigma_Y$.

5.13.4 Materials and welding.

5.13.4.1 Where stoppers or securing devices are fitted to comply with the requirements of this Chapter, they shall be manufactured of materials, including welding electrodes, meeting relevant requirements of Part XIII "Materials" and Part XIV "Welding" of the Rules for the Classification and Construction of Sea-Going Ships.

6 SURVEYS OF DOUBLE SKIN BULK CARRIERS

6.1 GENERAL

6.1.1 Application.

6.1.1.1 These requirements apply to all self-propelled double skin bulk carriers, as defined in 1.1.

6.1.1.2 For bulk carriers with hybrid cargo hold arrangements, e.g. with some cargo holds of single side skin and others of double side skin, the requirements of Section 5 shall apply to cargo holds of single side skin.

6.1.1.3 The requirements apply to surveys of hull structures and piping systems in way of cargo holds, cofferdams, pipe tunnels, void spaces and fuel oil tanks within the cargo length area and all ballast tanks. The requirements are additional to the classification requirements stated in Part II "Survey Schedule and Scope".

6.1.1.4 The requirements contain the minimum extent of examination, thickness measurements and tank testing. The survey shall be extended, when substantial corrosion and/or structural defects are found, and shall include additional close-up survey when necessary.

6.1.1.5 Stoppers and securing devices of hatch covers for cargo holds Nos. 1 and 2 of bulk carriers, as defined in 5.13.1.1, shall comply with the requirements of 5.13 (IACS UR S30) by the dates specified in 5.13.1.2.

6.1.1.6 If a ship is a combination carrier (ore/oil carrier, oil/bulk/ore carrier — refer to 2.2, Part I "General Provisions"), in addition to the requirements of this Section, the requirements of Sections 2 and/or 3 (as applicable) shall be met.

6.1.1.7 For non-**CSR** bulk carriers of 150 m in length and upwards, contracted for construction on or after 1 July 2006, intending to carry solid bulk cargoes having a density of 1,0 t/m^3 or above, with vertically corrugated watertight bulkheads and with double side skin construction in which any part of longitudinal bulkhead is located within *B/5* or 11,5 m, whichever is less, inboard from the ship's side at right angle to the centreline at the assigned summer load line, the technical condition of vertically corrugated bulkheads shall be evaluated according to the criteria specified in Appendix 3 to Part II "Hull" of the Rules for the Classification and Construction of Sea-Going Ships (IACS UR S18 starting from Rev. 7 and later). Therewith: steel renewal is required where the gauged thickness is less than t_{net} + 0,5 mm. Where the gauged thickness is within the range t_{net} + 0,5 mm and t_{net} + 1 mm, coating (applied in accordance with the coating manufacturer's requirements) or annual gauging may be adopted as an alternative to steel renewal.

6.1.1.8 Non-**CSR** bulk carriers of 150 m in length and upwards, contracted for construction on or after 1 July 2006, intending to carry solid bulk cargoes having a density of 1,0 t/m^3 or above, with double side skin construction in which any part of longitudinal bulkhead is located within *B*/5 or 11,5 m, whichever is less, inboard from the ship's side at right angle to the centreline at the assigned summer load line, shall comply with the requirements of Appendix 4 to Part II "Hull" of the Rules for the Classification and Construction of Sea-Going Ships (IACS UR S20 starting from Rev. 4 and later).

6.1.2 Definitions.

The definitions related to this Chapter are given in 1.1.

6.1.3 Repairs.

The provisions related to repairs of hull structures are given in 1.2.

6.1.4 Thickness measurements and close-up surveys.

In any kind of survey, i.e. special, intermediate, annual or other surveys having the scope of the foregoing ones, thickness measurements, when required by Table 6.2.4.1, of structures in areas where close-up surveys are required, shall be carried out simultaneously with close-up surveys.

6.2 SPECIAL SURVEY

6.2.1 Schedule.

6.2.1.1 The procedure for assigning period of class during special surveys shall comply with the applicable requirements listed in 2.4, Part II "Survey Schedule and Scope" of these Rules.

6.2.2 Scope.

6.2.2.1 General.

6.2.2.1.1 The special survey shall include, in addition to the requirements of the annual survey, examination, tests and checks of sufficient extent to ensure that the hull and related piping as required in 6.2.2.1.3, are in satisfactory condition and meet the intended purpose for the new period of class of 5 years to be assigned, subject to proper maintenance and operation and to periodical surveys being carried out at the due dates.

6.2.2.1.2 All cargo holds, ballast tanks, including double bottom tanks and double side tanks, pipe tunnels, cofferdams and void spaces bounding cargo holds, decks and outer hull shall be examined, and this examination shall be supplemented by thickness measurements and testing required in 6.2.4 and 6.2.5, to ensure that the structural integrity remains effective. The aim of the examination is to discover substantial corrosion, significant deformation, fractures, damages or other deterioration, that may be present.

6.2.2.1.3 All piping systems within the above spaces shall be examined and operationally tested under working pressure to attending surveyor's satisfaction to ensure that tightness and condition remain satisfactory.

6.2.2.1.4 The survey scope for ballast tanks converted to void spaces shall be specially considered in relation to the requirements for ballast tanks.

6.2.2.2 Dry dock survey.

6.2.2.2.1 A survey in dry dock is a part of the special survey. The overall and close-up surveys and thickness measurements, as applicable, of the lower portions of the cargo holds and ballast tanks shall be carried out in accordance with the applicable requirements for special surveys, if not already performed. The scope of the dry dock survey is specified in 2.5 of Part II "Survey Schedule and Scope".

N o t e . Lower portions of the cargo holds and ballast tanks are considered to be the parts below light ballast waterline.

6.2.2.3 Tank corrosion protection system.

6.2.2.3.1 The RS surveyor shall examine the condition of the corrosion prevention system of ballast tanks.

For ballast tanks, excluding double bottom tanks, where a hard protective coating is found in a POOR condition, and it is not renewed, where a soft or semihard coating has been applied, or where a hard protective coating has not been applied from the time of construction, the tanks in question shall be examined at subsequent annual intervals. Thickness measurements shall be carried out as deemed necessary by the RS surveyor. For double bottom ballast tanks, where a hard protective coating is found in POOR condition and it is not renewed, where a soft or semihard coating has been applied, or where a hard protective coating was not applied from the time of construction, the tanks in question may be examined at subsequent annual intervals. When considered necessary by the RS surveyor, or extensive corrosion exists, thickness measurements shall be carried out.

6.2.2.3.2 Where a hard protective coating is provided in cargo holds and is found in a GOOD condition, the extent of close-up surveys and thickness measurements may be specially considered.

6.2.2.3.3 Based on survey results the RS surveyor makes a record on the necessity of ballast tanks to be examined at annual intervals into the relevant RS reporting documents, the List of Ship's Status taking into account the requirements of 6.2.2.3.1.

6.2.2.4 Hatch covers and coamings.

The hatch covers and coamings shall be surveyed as follows:

.1 a thorough inspection of the items listed in 6.3.2.3 shall be carried out, in addition to all hatch covers and coamings;

.2 checking of the satisfactory operation of all mechanically operated hatch covers shall be made, including:

.2.1 stowage and securing in open condition;

.2.2 proper fit and efficiency of sealing in closed condition;

.2.3 operational testing of hydraulic and power components, wires, chains, and link drives;

.3 checking of the effectiveness of sealing arrangements of all hatch covers by hose testing or equivalent;

.4 close-up survey and thickness measurement[1] of hatch cover and coaming plating and stiffeners shall be carried out as given in Tables 6.2.3.2-1, 6.2.3.2-2 and 6.2.4.1.

.5 criteria for assessment of the condition of hatch covers and hatch coamings of cargo holds of bulk carriers, ore carriers and combination carriers contracted for construction on or after 1 January 2004 except for CSR bulk carriers are given in Appendix 5.2-1.

6.2.3 Scope of overall and close-up surveys.

6.2.3.1 An overall survey of all tanks and spaces shall be carried out at each special survey. Fuel oil tanks in the cargo length area shall be surveyed in accordance with Table 6.2.3.1.

Table 6.2.3.1

Overall survey of fuel oil tanks in the cargo length area at special surveys of double skin bulk carriers

Special survey No. 1 age ≤ 5	Special survey No. 2 5 < age ≤ 10	Special survey No. 3 10 < age ≤ 15	Special survey No. 4 and subsequent age > 15
None	One	Two	Half, minimum two
N o t e s :1.These requirements apply to tanks of integral (structural) type. 2. If a selection of tanks is accepted to be examined, then different tanks shall be examined at each special survey, on a rotational basis. 3. Peak tanks (all uses) shall be subject to internal examination at each special survey. 4. At special survey No. 3 and subsequent surveys, one deep tank for fuel oil in the cargo area shall be included, if fitted.			

6.2.3.2 The minimum requirements for close-up surveys at special survey are given in Table 6.2.3.2-1 for double skin bulk carriers and in Table 6.2.3.2-2 for ore carriers, respectively.

Table 6.2.3.2-1

Minimum requirements for close-up survey at special survey of double skin bulk carriers

Special survey No. 1 age ≤ 5	Special survey No. 2 5 < age ≤ 10	Special survey No. 3 10 < age ≤ 15	Special survey No. 4 and subsequent age > 15
(A) One transverse web with associated plating and longitudinals in two representative water ballast	*(A)* One transverse web with associated plating and longitudinals as applicable in each water ballast tank	*(A)* All transverse webs with associated plating and longitudinals as applicable in each water ballast tank	*(A)* All transverse webs with associated plating and longitudinals as applicable in each water ballast tank

[1] Subject to cargo hold hatch covers of approved design which structurally have no access to the internals, close-up survey/ thickness measurement shall be done of accessible parts of hatch covers structures.

Special survey No. 1 age ≤ 5	Special survey No. 2 5 < age ≤ 10	Special survey No. 3 10 < age ≤ 15	Special survey No. 4 and subsequent age > 15
tanks of each type (this shall include the foremost topsideand double side water ballast tanks on either side) *(C)* Two selected cargo hold transverse bulkheads, including internal structure of upper and lower stools, where fitted *(D)* All cargo hold hatch covers and coamings (platings and stiffeners)	*(A)* Forward and aft transverse bulkheads including stiffening system in a transverse section including topside, hopper and double side ballast tanks on one side of the ship (i.e. port or starboard) *(B)* 25 % of ordinary transverse frames for transverse framing system or 25 % of longitudinals for longitudinal framing system on side shell and inner side plating at forward, middle and aft parts, in the foremost double side tanks *(C)* One transverse bulkhead in each cargo hold, including internal structure of upper and lower stools, where fitted *(D)* All cargo hold hatch covers and coamings (platings and stiffeners) *(E)* All deck plating and underdeck structure inside line of hatch openings between all cargo hold hatches	*(A)* All transverse bulkheads including stiffening system in each water ballast tank *(B)*25 % of ordinary transverse frames for transverse framing system or 25 % of longitudinals for longitudinal framing system on side shell and inner side plating at forward, middle and aft parts, in all double side tanks *(C)* One transverse bulkhead in each cargo hold, including internal structure of upper and lower stools, where fitted *(D)* All cargo hold hatch covers and coamings (platings and stiffeners) *(E)* All deck plating and underdeck structure inside line of hatch openings between all cargo hold hatches	*(A)* All transverse bulkheads including stiffening system in each water ballast tank *(B)* All ordinary transverse frames for transverse framing system or all of longitudinals for longitudinal framing system on side shell and inner side plating at forward, middle and aft parts, in all double side tanks *Areas (C)*, *(D)* and *(E)* as for special survey No. 3

Notes: 1. *A* — *E* — areas to be subjected to close-up surveys and thickness measurements, including:
A — transverse web frame or watertight transverse bulkhead in topside, hopper side and double side ballast tanks. In fore and aft peak tanks, transverse web frame means a complete transverse web frame ring including adjacent structural members;
B — ordinary transverse frame in double side tanks, including the associated plating; longitudinals in double side tanks for longitudinal framing system, including the associated plating;
C — cargo hold transverse bulkheads plating, stiffeners and girders;
D — cargo hold hatch covers and coamings (plating and stiffeners). Subject to cargo hold hatch covers of approved design which structurally have no access to the internals, close-up survey/thickness measurement shall be done of accessible parts of hatch covers structures;
E — deck plating and underdeck structure inside the line of hatch openings between cargo hold hatches.
2. Areas *(A)* — *(E)* for close-up surveys and thickness measurements of bulk carriers and combined carriers are shown in Figs. 6.2.3.2-1 — 6.2.3.2-3.
3. The criteria for assessment of cargo hold hatch covers and coamings condition (for ships constructed on or after 1 January 2004) are given in Appendix 5.2-1.
4. Close-up survey of transverse bulkheads shall be carried out at four levels shown in Figs. 6.2.3.2-4 and 6.2.3.2-5:
level *a* — immediately above the inner bottom and immediately above the line of gussets (if fitted) and shedders for ships without lower stool;
level *b* — immediately above and below the lower stool shelf plate (for those ships fitted with lower stools), and immediately above the line of shedder plates;
level *c* — about mid-height of the bulkhead;
level *d* — immediately below the upper deck plating and immediately adjacent to the top side tank, and immediately below the upper stool shelf plate (for those ships fitted with upper stools), or immediately below the topside tanks.

Table 6.2.3.2-2

Minimum requirements for close-up survey at special hull survey of ore carriers

Special survey No. 1 age ≤ 5	Special survey No. 2 5 < age ≤ 10	Special survey No. 3 10 < age ≤ 15	Special survey No. 4 and subsequent age > 15
(A) One web frame ring complete, including adjacent structural members in a ballast wing tank *(A)* One transverse bulkhead lower part, including girder system and adjacent structural members — in a ballast tank *(C)* Two selected cargo hold transverse bulkheads, including internal structure of upper and lower stools, where fitted *(D)* All cargo hold hatch covers and coamings (plating and stiffeners)	*(A)* All web frame rings complete, including adjacent structural members in a ballast wing tank *(A)* One deck transverse including adjacent deck structural members in each remaining ballast tank *(A)* Forward and aft transverse bulkheads complete, including girder system and adjacent structural members — in a ballast wing tank *(A)* One transverse bulkhead lower part, including girder system and adjacent structural members — in each remaining ballast tank *(C)* One transverse bulkhead in each cargo hold, including internal structure of upper and lower stools, where fitted *(D)* All cargo hold hatch covers and coamings (plating and stiffeners) *(E)* All deck plating and underdeck structure inside line of hatch openings between all cargo hold hatches	*(A)* All web frame rings complete, including adjacent structural members in each ballast tank *(A)* All transverse bulkheads complete, including girder system and adjacent structural members — in each ballast tank. *(A)* One web frame ring complete, including adjacent structural members in each wing void space *(A)* Additional web frame rings in void spaces as deemed necessary by the surveyor *(C)* All cargo hold transverse bulkheads, including internal structure of upper and lower stools, where fitted *(D)* All cargo hold hatch covers and coamings (plating and stiffeners) *(E)* All deck plating and underdeck structure inside line of hatch openings between all cargo hold hatches	*(A)* areas as for special survey No. 3 *(C)*, *(D)*, *(E)* areas as for special survey No. 3

Notes: 1. *(A)*, *(C)*, *(D)* and *(E)* are areas to be subjected to close-up surveys and thickness measurements, including:
(A) — transverse web frame or watertight transverse bulkhead in ballast wing tanks and void spaces. In fore and aft peak tanks transverse web frame means a complete transverse web frame ring including adjacent structural members;
(C) — cargo hold transverse bulkheads plating, stiffeners and girders;
(D) — cargo hold hatch covers and coamings. Subject to cargo hold hatch covers of approved design which structurally have no access to the internals, close-up survey/thickness measurement shall be done of accessible parts of hatch covers structures;
(E) — deck plating and underdeck structure inside line of hatch openings between cargo hold hatches.
2. Close-up survey of transverse bulkheads to be carried out at four levels (refer to Figs. 6.2.3.2-4 and 6.2.3.2-5):
level *a* — immediately above the inner bottom and immediately above the line of gussets (if fitted) and shedders for ships without lower stool;
level *b* — immediately above and below the lower stool shelf plate (for those ships fitted with lower stools), and immediately above the line of the shedder plates;
level *c* — about mid-height of the bulkhead;
level *d* — immediately below the upper deck plating and immediately adjacent to the upper wing tank, and immediately below the upper stool shelf plate for those ships fitted with upper stools, or immediately below the topside tanks.

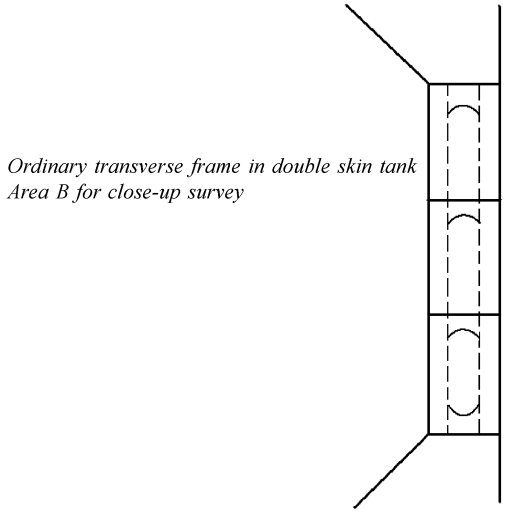

Fig. 6.2.3.2-1
Area *B* for close-up survey of bulk carriers

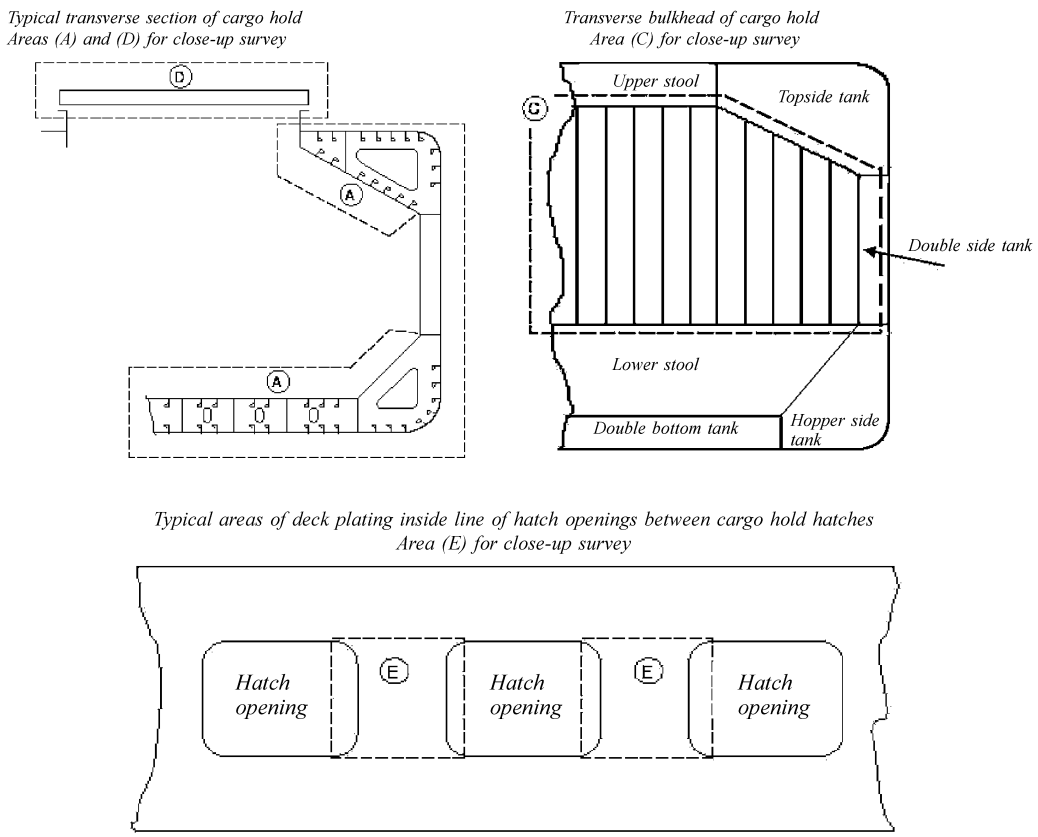

Fig. 6.2.3.2-2
Areas *(A)*, *(C)*, *(D)* and *(E)* for close-up surveys of bulk carriers

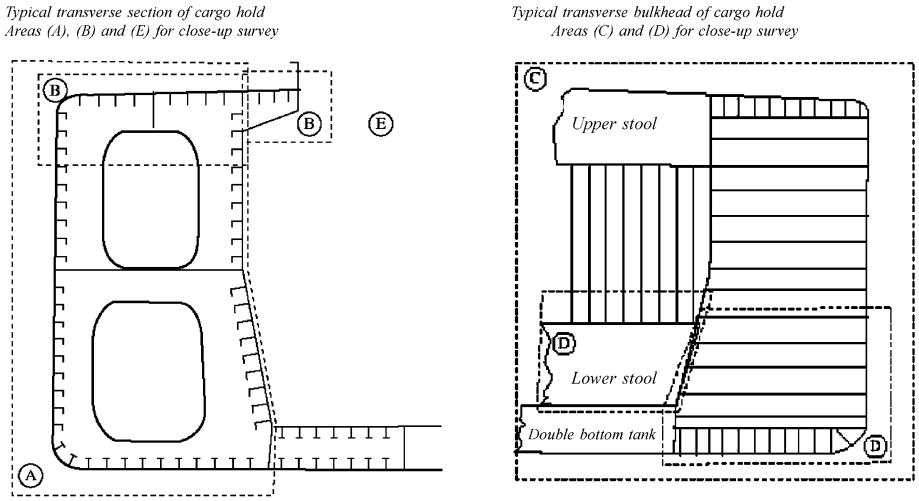

Fig. 6.2.3.2-3
Areas *(A)*, *(C)*, *(D)* and *(E)* for close-up surveys of ore carriers and combination carriers

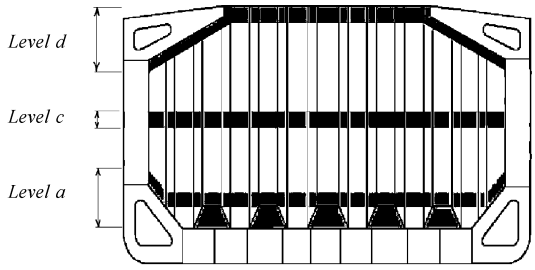

Fig. 6.2.3.2-4
Levels *a*, *c* and *d* for close-up surveys of transverse bulkheads without upper and lower stools in cargo holds of bulk carriers

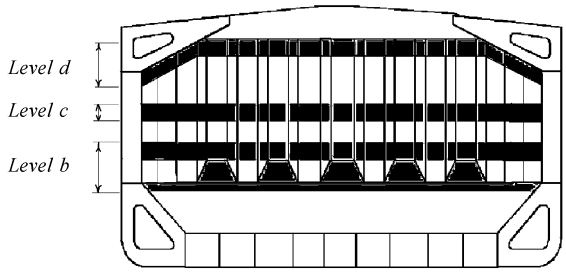

Fig. 6.2.3.2-5
Levels *b*, *c* and *d* for close-up surveys of transverse bulkheads with upper and lower stools in cargo holds of bulk carriers

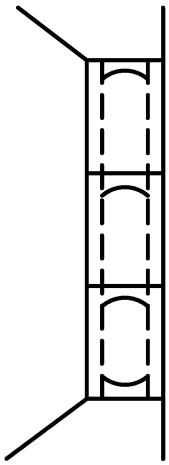

Fig. 6.2.3.2-6
Area *(B)* for close-up survey and thickness measurement of ordinary transverse frame in double skin tank

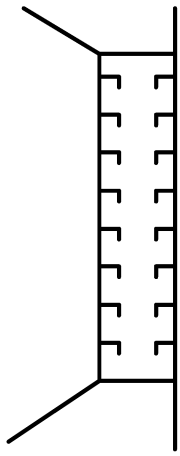

Fig. 6.2.3.2-7
Area *(B)* for close-up survey and thickness measurement of ordinary longitudinal structure in double skin tank

6.2.3.4 For areas in spaces where hard protective coatings are found to be in a GOOD condition, the scope of close-up surveys according to Table 6.2.3.2-1 or Table 6.2.3.2-2 may be specially considered (refer also to 6.2.2.3.2).

6.2.4 Extent of thickness measurements.

6.2.4.1 The minimum requirements for thickness measurements at special surveys are given in Table 6.2.4.1.

Table 6.2.4.1

Minimum requirements for thickness measurements at special surveys of double skin bulk carriers

Special survey No. 1 age ≤ 5	Special survey No. 2 5 < age ≤ 10	Special survey No. 3 10 < age ≤ 15	Special survey No. 4 and subsequent age > 15
1. Suspect areas	**1.** Suspect areas **2.** Within the cargo length: **.1** two transverse sections of deck plating outside line of cargo hatch openings **3.** Wind and water strakes in way of the two transverse sections considered above **4.** Selected wind and water strakes **5.** Measurements, for general assessment and recording of corrosion pattern, of those structural members subject to close-up survey according to Table 6.2.3.2-1 or 6.2.3.2-2, as applicable	**1.** Suspect areas **2.** Within the cargo length: **.1** each deck plate outside line of cargo hatch openings **.2** two transverse sections outside the line of cargo hatch openings, of which one is in the midship area **.3** all wind and water strakes **3.** Selected wind and water strakes outside the cargo length area **4.** Measurements, for general assessment and recording of corrosion pattern, of those structural members subject to closeup survey according to Table 6.2.3.2-1 or 6.2.3.2-2, as applicable	**1.** Suspect areas **2.** Within the cargo length: **.1** each deck plate outside a line of cargo hatch openings **.2** three transverse sections outside the line of cargo hatch openings, of which one is in the midship area **.3** each bottom plate **3.** All wind and water strakes, full length **4.** Measurements, for general assessment and recording of corrosion pattern, of those structural members subject to close-up survey according to Table 6.2.3.2-1 or 6.2.3.2-2, as applicable

6.2.4.2 Requirements for extended thickness measurements for areas with substantial corrosion are given in Table 6.2.4.2, and may be additionally specified in the Survey Programme as required by 1.3.1. These extended thickness measurements shall be carried out before the survey is credited as completed. Suspect areas identified during survey including at previous surveys shall be examined. Areas of substantial corrosion identified during current survey or at previous surveys shall have thickness measurements taken. For **CSR** ships, the identified substantial corrosion areas may be:

protected by coating applied in accordance with the coating manufacturer's requirements and examined at annual intervals to confirm the coating in way is still in good condition; or alternatively;

required to be measured at annual intervals.

Table 6.2.4.2

Requirements for extent of thickness measurements at those areas of substantial corrosion within the cargo length area at special surveys of double skin bulk carriers

Structural member	Extent of measurements	Pattern of measurements
	1. Bottom, inner bottom and hopper structure	
1.1 Bottom, inner bottom and hopper structure plating	*a)* Minimum of three bays across double bottom tank, including aft bay;	*a)* 5 point pattern for each panel between longitudinals and floors

Structural member	Extent of measurements	Pattern of measurements
	b) measurements around and under all suction bell mouths	
1.2 Bottom, inner bottom and hopper structure longitudinals	Minimum of three longitudinals in each bay where bottom plating measured	Three measurements in line across the flange and three measurements on the vertical web
1.3 Vertical keel and bottom girders, including the watertight ones	At fore and aft watertight floors and in centre of tanks	Vertical line of single measurements on keel and girder plating with one measurement between each panel stiffener, or a minimum of three measurements
1.4 Bottom floors, including the watertight ones	Three floors in the bays where bottom plating measured, with measurements at both ends and middle	5 point pattern over 2 m^2 area
1.5 Hopper structure web frame ring	Three floors in bays where bottom plating measured	5 point pattern over 1 m^2 of plating Single measurements on flange
1.6 Hopper structure transverse watertight bulkhead and swash bulkhead	*a)* lower 1/3 of bulkhead;	*a)* 5 point pattern over 1 m^2 of plating;
	b) upper 2/3 of bulkhead;	*b)* 5 point pattern over 2 m^2 of plating;
	c) stiffeners (minimum of three)	*c)* for web, 5 point pattern over span (two measurements across web at each end and one at centre of span) or flange, single measurements at each end and centre of span
1.7 Panel stiffening	Where applicable	Single measurements
2. Deck structures, including cross strips, main cargo hatchways, hatch covers, coamings and topside tanks		
2.1 Cross deck strip plating	*a)* Suspect cross deck strip plating	*a)* 5 point pattern between underdeck stiffeners over 1 m length
2.2 Underdeck stiffeners	*a)* Transverse members	*a)* 5 point pattern at each end and mid span
	b) longitudinal members	*b)* 5 point pattern on both web and flange
2.3 Hatch covers	*a)* Side and end skirts, each three locations	*a)* 5 point pattern at each end and mid span
	b) three longitudinal bands, two outboard strakes and one centerline strake	*b)* 5 point measurement each band
2.4 Hatch coamings	Each side and end of coaming, one band lower 1/3, one band upper 2/3 of coaming	5 point measurement each band, i.e. end or side coaming
2.5 Topside ballast tanks	*a)* Watertight transverse bulkheads:	
	lower 1/3 of bulkhead	5 point pattern over 1 m^2 of plating
	upper 2/3 of bulkhead	5 point pattern over 1 m^2 of plating
	stiffeners;	5 point pattern over 1 m length
	b) two representative swash transverse bulkheads:	
	lower 1/3 of bulkhead	5 point pattern over 1 m^2 of plating
	upper 2/3 of bulkhead	5 point pattern over 1 m^2 of plating
	stiffeners;	5 point pattern over 1 m length
	c) three representative bays of slope plating:	
	lower 1/3 of tank	5 point pattern over 1 m^2 of plating
	upper 2/3 of tank	5 point pattern over 1 m^2 of plating
	d) longitudinals, suspect and adjacent	*d)* 5 point pattern on both web and flange over 1 m length
2.6 Main deck plating	Suspect plates and four adjacent	5 point pattern over 1 m^2 of plating
2.7 Main deck longitudinals	Suspect plates	5 point pattern on both web and flange over 1 m length.
2.8 Web frames/transverses	Suspect plates	5 point pattern over 1 m^2 of plating
3. Structures in double side spaces of double skin bulk carriers including wing spaces of ore carriers		
3.1 Side shell and inner plating:		
.1 upper strake and strakes in way of horizontal girders (side stringers, platforms, etc.)	Plating between each pair of transverse frames/ longitudinals in a minimum of three bays (along the tank)	Single measurements

Structural member	Extent of measurements	Pattern of measurements
.2 all other strakes	Plating between every third pair of longitudinals in same three bays	Single measurements
3.2 Side shell and inner side transverse frames/longitudinals on:		
.1 upper strake	Each transverse frame/longitudinal in same three bays	Three measurements across web and one measurement on flange
.2 all other strakes	Every third transverse frame/longitudinal in same three bays	Three measurements across web and one measurement on flange
3.3 End brackets of transverse frames/ longitudinals	Minimum of three at top, middle and bottom of tank in same three bays	5 point pattern over area of bracket
3.4 Vertical web and transverse bulkheads:		
.1 strakes in way of horizontal girders	Minimum of two webs and both transverse bulkheads	5 point pattern over approx. 2 m^2 area
.2 other strakes	Minimum of two webs and both transverse bulkheads	Two measurements between each pair of vertical stiffeners.
3.5 Horizontal girders	Plating on each girder in a minimum of three bays	Two measurements between each pair of longitudinal girder stiffeners
3.6 Panel stiffening	Where applicable	Single measurements
4. Transverse bulkheads in cargo holds		
4.1 Lower stool, where fitted	*a)* Transverse band within 25 mm of welded connection to inner bottom	*a)* 5 point pattern between stiffeners over 1 m length
	b) transverse band within 25 mm of welded connection to shelf plate	*b)* 5 point pattern between stiffeners over 1 m length
4.2 Transverse bulkheads	*a)* Transverse band at approx. mid height;	*a)* 5 point pattern over 1 m^2 of plating
	b) transverse band at part of bulkhead adjacent to upper deck or below upper stool shelf plate (for those ships fitted with upper stools)	*b)* 5 point pattern over 1 m^2 of plating

6.2.4.3 The surveyor may further extend the thickness measurements as deemed necessary.

6.2.4.4 For areas in tanks where a hard protective coating is found to be in a GOOD condition, the extent of thickness measurements according to Table 6.2.4.1 may be specially considered (refer also to 6.2.2.3.2).

6.2.4.5 Transverse sections shall be chosen where the largest reductions are suspected to occur or are revealed from deck plating measurements, one of which shall be in the amidships area.

6.2.4.6 Representative (control) thickness measurements to determine both general and local levels of corrosion in transverse web frames and their end connections in all water ballast tanks shall be carried out. Thickness measurements shall be also carried out to determine the corrosion levels on the transverse bulkhead plating. The extent of thickness measurements may be specially considered, provided the surveyor is satisfied by the close-up survey, that there is no structural diminution, and the hard protective coating where applied remains efficient.

6.2.5 Extent of tank testing.

6.2.5.1 All boundaries of water ballast tanks, deep tanks and cargo holds used for water ballast within the cargo length area, and representative fuel oil tanks shall be pressure tested.

6.2.5.2 The surveyor may extend the tank testing as deemed necessary.

6.2.5.3 Boundaries of ballast tanks shall be tested with a head of liquid to the top of air pipes.

6.2.5.4 Boundaries of cargo holds used for water ballast shall be tested with ahead of liquid to near to the top of hatches.

6.2.5.5 Boundaries of fuel oil tanks shall be tested with a head of liquid to the highest point that liquid will rise under service conditions. Tank testing of fuel oil tanks may be

specially considered based on a satisfactory external examination of the tank boundaries, and a confirmation from the master stating that the pressure testing has been carried out according to the requirements with satisfactory results.

6.2.5.6 The testing of double bottom tanks and other spaces not designed for the carriage of liquid may be omitted, provided a satisfactory internal examination together with an examination of the tanktop is carried out.

6.2.6 Additional special survey requirements after determining compliance with SOLAS XII/12 and XII/13.

6.2.6.1 For ships complying with the requirements of SOLAS XII/12 for hold, ballast and dry space water level detectors, the special survey shall include an examination and a test of the water ingress detection systems and of their alarms.

6.2.6.2 For ships complying with the requirements of SOLAS XII/13 for the availability of pumping system, the special survey shall include an examination and a test of the means for draining and pumping ballast tanks forward of the collision bulkhead and bilges of dry spaces, any part of which extends forward of the foremost cargo hold, and of their controls.

6.2.6.3 The timing for bulk carriers compliance with the SOLAS XII/12 and XII/13 requirements are given in Appendix 5.2-2.

6.3 ANNUAL SURVEY

6.3.1 Schedule.

6.3.1.1 Annual surveys shall be held within 3 months before or after the anniversary date from the date of the initial survey or of the date credited for the previous special survey.

6.3.2 Scope.

6.3.2.1 General.

6.3.2.1.1 The survey shall consist of an examination for the purpose of ensuring, as far as practicable, that the hull, weather decks, hatch covers, coamings and piping are maintained in a satisfactory condition and should take into account the service history, condition and extent of the corrosion prevention system of ballast tanks and areas identified in the RS reporting documents based on results of previous surveys.

6.3.2.2 Survey of the hull.

6.3.2.2.1 Survey of the hull plating and its closing appliances, as far as can be seen, shall be carried out.

6.3.2.2.2 Survey of watertight penetrations, as far as practicable, shall be carried out.

6.3.2.3 Survey of weather decks, hatch covers and coamings.

6.3.2.3.1 Confirmation shall be obtained that no unapproved changes have been made to the hatch covers, hatch coamings and their securing and sealing devices since the last survey.

6.3.2.3.2 A thorough survey of cargo hatch covers and coamings is only possible by examination in the open as well as closed positions and shall include verification of proper opening and closing operation. As a result, the hatch cover sets within the forward 25 % of the ship's length and at least one additional set, such that all sets on the ship are assessed at least once in every 5-year period, shall be surveyed open, closed and in operation to the full extent on each direction at each annual survey, including:

.1 stowage and securing in open condition;

.2 proper fit and efficiency of sealing in closed condition; and

.3 operational testing of hydraulic and power components, wires, chains and link drives.

The closing of the covers shall include the fastening of all peripheral, and cross joint cleats or other securing devices. Particular attention shall be paid to the condition of the hatch covers in the forward 25 % of the ship's length, where sea loads are normally greatest.

6.3.2.3.3 If there are indications of difficulty in operating and securing hatch covers, additional sets at the discretion of the surveyor shall be tested in operation (refer to 6.3.2.3.2).

6.3.2.3.4 Where the cargo hatch securing system does not function properly, repairs shall be carried out under the supervision of the Register. Where hatch covers and/or coamings undergo significant repairs, the strength of securing devices shall be upgraded to comply with S21.5 of IACS UR S21 (refer to 7.13, Part III "Equipment, Arrangements and Outfit" of the Rules for the Classification and Construction of Sea-Going Ships).

6.3.2.3.5 For each cargo hatch cover set, at each annual survey, the following items shall be surveyed:

.1 cover panels, including side plates, and stiffener attachments that may be accessible in the open position by close-up survey (for corrosion, cracks, deformation);

.2 sealing arrangements of perimeter and cross joints (gaskets for condition and permanent deformation, flexible seals on combination carriers, gasket lips compression bars, drainage channels and non return valves);

.3 clamping devices, retaining bars, cleating (for wastage, adjustment, and condition of rubber components);

.4 closed cover locating devices (for distortion and attachment);

.5 chain or rope pulleys;

.6 guides;

.7 guide rails and track wheels;
.8 stoppers;
.9 wires, chains, tensioners and gypsies;
.10 hydraulic system, electrical safety devices and interlocks; and
.11 end and interpanel hinges, pins and stools where fitted.

6.3.2.3.6 At each hatchway, at each annual survey, the coamings, with plating, stiffeners and brackets shall be checked for corrosion, cracks and deformation, especially of the coaming tops, including close-up survey.

6.3.2.3.7 Where considered necessary, the effectiveness of sealing arrangements may be proved by hose or chalk testing supplemented by dimensional measurements of seal compressing components.

6.3.2.3.8 Where portable covers, wooden or steel pontoons are fitted, checking the satisfactory condition, where applicable, of the following:

.1 wooden covers and portable beams, carriers or sockets for the portable beam, and their securing devices;
.2 steel pontoons, including close-up survey of hatch cover plating;
.3 tarpaulins;
.4 cleats, battens and wedges;
.5 hatch securing bars and their securing devices;
.6 loading pads/bars and the side plate edge;
.7 guide plates and chocks;
.8 compression bars, drainage channels and drain pipes.

6.3.2.3.9 Survey of flame screens on vents to all bunker tanks shall be carried out.

6.3.2.3.10 Survey of bunker and vent piping systems, including ventilators, shall be carried out.

6.3.2.3.11 On ships constructed on or after 1 January 2004, which cargo hold coamings, hatch cover plating and structures were coated according to the results of condition assessment (refer to Appendix 5.2-1), an examination shall be carried out to confirm a GOOD condition of the protective coating applied. Where annual thickness measurements instead of coating are specified, these shall be made before survey is credited as complete.

6.3.2.4 Survey of cargo holds.

6.3.2.4.1 The following shall apply to double skin bulk carriers 10 — 15 years of age:

.1 overall survey of two selected cargo holds;

.2 when considered necessary by the surveyor, or where extensive corrosion exists, thickness measurements shall be carried out. If the results of these thickness measurements indicate that substantial corrosion is found, the extent of thickness measurements shall be increased in accordance with Table 6.2.4.2. These extended thickness measurements shall be carried out before the annual survey is credited as complete. Suspect areas identified at previous surveys shall be examined. Areas of substantial corrosion identified at previous surveys shall have thickness measurements taken. For ships built under the IACS Common Structural Rules the annual thickness measurements may be omitted where a protective coating has been applied in accordance with the coating manufacturer's requirements and is maintained in good condition;

.3 all piping and penetrations in cargo holds, including overboard piping, shall be examined.

6.3.2.4.2 The following shall apply to double skin bulk carriers over 15 years of age:

.1 overall survey of all cargo holds;

.2 when considered necessary by the surveyor, or where extensive corrosion exists, thickness measurements shall be carried out. If the results of these thickness measurements indicate that substantial corrosion is found, the extent of thickness measurements shall be increased in accordance with Table 6.2.4.2. These extended thickness measurements shall be carried out before the annual survey is credited as complete. Suspect areas identified at

previous surveys shall be examined. Areas of substantial corrosion identified at previous surveys shall have thickness measurements taken. For **CSR** ships, the annual thickness measurements may be omitted where a protective coating has been applied in accordance with the coating manufacturer's requirements and is maintained in good condition;

.3 all piping and penetrations in all cargo holds, including overboard piping, shall be examined.

6.3.2.5 Survey of ballast tanks.

6.3.2.5.1 Survey of ballast tanks when required as a consequence of the results of the special survey (refer to 6.2.2.3) or intermediate survey (refer to 6.4.2) shall be carried out. When considered necessary by the RS surveyor, or where extensive corrosion exists, thickness measurements shall be carried out. If the results of these thickness measurements indicate that substantial corrosion is found, the extent of thickness measurements shall be increased in accordance with Table 6.2.4.2. These extended thickness measurements shall be carried out before the annual survey is credited as complete. Suspect areas identified at previous surveys shall be examined. Areas of substantial corrosion identified at previous surveys shall have thickness measurements taken. For **CSR** ships, the annual thickness measurements may be omitted where a protective coating has been applied in accordance with the coating manufacturer's requirements and is maintained in good condition.

6.3.3 Additional annual survey requirements after determining compliance with SOLAS XII/12 and XII/13.

6.3.3.1 For ships meeting the requirements of SOLAS XII/12 for hold, ballast and dry space water level detectors, the annual survey shall include an examination and a test, at random, of the water ingress detection systems and of their alarms.

6.3.3.2 For ships meeting the requirements of SOLAS XII/13 for the availability of pumping system, the annual survey shall include an examination and a test of the means for draining and pumping ballast tanks forward of the collision bulkhead and bilges of dry spaces, any part of which extends forward of the foremost cargo hold, and of their controls.

6.3.3.3 The timing for bulk carriers compliance with SOLAS XII/12 and XII/13 requirements are given in Appendix 5.2-2.

6.3.4 Verification of fulfillment of additional requirements of the RS rules.

6.3.4.1 Loading instrument and Loading Manual.

6.3.4.1.1 The presence of the loading instrument of approved type onboard bulk carriers of 150 m and over in length shall be checked. The loading instrument shall meet:

.1 the requirements of 1.4.9.4, Part II "Hull" of the Rules for the Classification and Construction of Sea-Going Ships for ships contracted for construction before 1 July 1998;

.2 the requirements of 3.3.6, Part II "Hull" of the Rules for the Classification and Construction of Sea-Going Ships for ships contracted for construction on or after 1 July 1998.

6.3.4.1.2 The presence of an approved Loading Manual onboard bulk carriers of 150 m and over in length shall be checked.

6.4 INTERMEDIATE SURVEY

6.4.1 Schedule.

6.4.1.1 The intermediate survey shall be held at or between either the second or third annual survey.

6.4.1.2 The items of technical supervision to be surveyed additionally to the scope of the annual survey, may be surveyed either at or between the second or third annual survey.

6.4.1.3 Concurrent crediting to both intermediate survey and special survey for surveys and thickness measurements of spaces are not acceptable.

6.4.2 Scope.

6.4.2.1 General.

6.4.2.1.1 In addition to the scope of the annual survey specified in 6.3, the scope of the intermediate survey shall include, depending on the ship's age, the requirements of 6.4.2.2 — 6.4.2.4 given in Table 6.4.2.1.1 as well.

Table 6.4.2.1.1

Minimum requirements for overall and close-up surveys and thickness measurements at intermediate survey of double skin bulk carriers

Age of ship at time of intermediate survey due date		
5 < age ≤ 10	10 < age ≤ 15	age > 15
Overall survey of representative ballast tanks selected by the attending surveyor. The selection shall include fore and aft peak tanks and a number of other tanks, taking into account the total number and type of ballast tanks Overall and close-up survey of suspect areas identified at previous surveys Overall survey of all cargo holds Thickness measurements to an extent sufficient to determine both general and local corrosion levels at areas subject to close-up survey at suspect areas identified at previous surveys	The requirements of the previous special survey (refer to 6.4.2.3)	The requirements of the previous special survey (refer to 6.4.2.4)

6.4.2.2 Survey of double skin bulk carriers 5 — 10 years of age.

For double skin bulk carriers 5 — 10 years of age, the following shall apply:

.1 for ballast tanks:

.1.1 for tanks used for water ballast, an overall survey of representative tanks selected by the surveyor shall be carried out. The selection shall include fore and aft peak tanks and a number of other tanks, taking into account the total number and type of ballast tanks. If such overall survey reveals no visible structural defects, the examination may be limited to verification that the corrosion prevention system remains efficient;

.1.2 where a POOR coating condition, corrosion or other defects are found in water ballast tanks, or where a hard or semihard coating has been applied, or a hard protective coating was not applied from the time of construction, the examination shall be extended to other ballast tanks of the same type;

.1.3 in ballast tanks other than double bottom tanks, where a hard protective coating is found in POOR condition, and it is not renewed, or where a soft or semihard coating has been applied, or where a hard protective coating was not applied from the time of construction, the tanks in question shall be examined and thickness measurements shall be carried out as considered necessary at subsequent annual intervals. Where a hard protective coating is found in POOR condition in ballast double bottom tanks, and it is not renewed, or where the soft or semihard coating has been applied, or where a hard protective coating has not been applied, the tanks in question may be examined at subsequent annual intervals. When considered necessary by the RS surveyor, or where extensive corrosion exists, thickness measurements shall be carried out;

.1.4 in addition to the requirements above, suspect areas identified at previous surveys shall be subjected to overall and close-up survey;

.1.5 based on survey results the RS surveyor makes a record on the necessity of ballast tanks to be examined at annual intervals into the relevant RS reporting documents, the List of Ship's Status taking into account the requirements of 6.4.2.2.1.3;

.2 for cargo holds:

.2.1 an overall survey of all cargo holds shall be carried out;

.2.2 where considered necessary by the surveyor as a result of the overall survey, the survey shall be extended to include a close-up survey of those areas of structure in the cargo holds selected by the surveyor;

.3 for extent of thickness measurements:

.3.1 thickness measurements shall be carried out to an extent sufficient to determine both general and local corrosion levels at areas subject to a close-up survey, where required as per 6.4.2.2.2.2, and as provided in 6.4.2.2.1.3;

.3.2 the extent of thickness measurements may be specially considered, provided the surveyor is satisfied by the close-up survey that there is no structural diminution and the hard protective coatings are found to be in a GOOD condition;

.3.3 where substantial corrosion is found, the extent of thickness measurements shall be increased in accordance with Table 6.2.4.2. These extended thickness measurements shall be carried out before the survey is credited as completed. Suspect areas identified at previous surveys shall be examined. Areas of substantial corrosion identified at previous surveys shall have thickness measurements taken. For **CSR** ships, the identified substantial corrosion areas may be:

protected by coating applied in accordance with the coating manufacturer's requirements and examined at annual intervals to confirm the coating in way is still in good condition; or alternatively;

required to be measured at annual intervals;

.3.4 where the hard protective coating in cargo holds is found to be in GOOD condition, the scope of close-up surveys and thickness measurements may be specially considered.

N o t e . For existing bulk carriers, where shipowners may elect to coat or recoat cargo holds as noted above, consideration may be given to the scope of the close-up and thickness measurement surveys. Prior to the coating of cargo holds of existing ships, scantlings shall be ascertained in the presence of a surveyor.

6.4.2.3 Survey of double skin bulk carriers 10 — 15 years of age.

For double skin bulk carriers 10 — 15 years of age, the following shall apply:

.1 the requirements of the intermediate survey shall be to the same extent as the previous special survey as required in 1.3.1 and 6.2. However, internal examination of fuel oil tanks and pressure testing of all tanks are not required unless deemed necessary by the attending surveyor;

.2 the above mentioned intermediate survey may be commenced at the second annual survey and be progressed during the succeeding year with a view to completion at the third annual survey;

.3 in-water survey may be considered in lieu of the requirement in 6.2.2.2.

6.4.2.4 Survey of bulk carriers over 15 years of age.

For double skin bulk carriers over 15 years of age, the following shall apply:

.1 the requirements of the intermediate survey shall be to the same extent as the previous special survey as required in 1.3.1 and 6.2. However, internal examination of fuel oil tanks and pressure testing of all tanks are not required unless deemed necessary by the attending surveyor;

.2 the above mentioned intermediate survey may be commenced at the second annual survey and be progressed during the succeeding year with a view to completion at the third annual survey;

.3 a survey in dry dock shall be part of the intermediate survey.

The overall and close-up surveys and thickness measurements, as applicable, of the lower portions of cargo holds and ballast tanks shall be carried out in accordance with the applicable requirements for intermediate surveys, if not already performed. The scope of the dry dock survey is given in 2.5, Part II "Survey Schedule and Scope".

N o t e . Lower portions of the cargo holds and ballast tanks are considered to be the parts below light ballast waterline.

6.5 PREPARATIONS FOR SURVEY

6.5.1 The provisions related to preparations for survey are given in 1.3.

6.6 DOCUMENTATION ON BOARD

6.6.1 The provisions related to availability and verification of documentation on board are given in 1.4.

6.7 PROCEDURES FOR THICKNESS MEASUREMENTS

6.7.1 The provisions related to procedures for thickness measurements of hull structures are given in 1.5.

6.8 REPORTING ON HULL SURVEY AND EVALUATION OF SURVEY

6.8.1 The provisions related to drawing up the RS reporting documents and evaluation of survey results are given in 1.9.

7 HULL SURVEYS OF CERTAIN TYPES OF GENERAL DRY CARGO SHIPS

7.1 GENERAL

7.1.1 Application.

7.1.1.1 These requirements apply to all self-propelled general dry cargo ships, as defined in 1.1, of 500 gross tonnage and above other than[1]:

.1 ships subject to the requirements of Sections 5 or 6 (single skin and double skin bulk carriers);

.2 container ships;

.3 ro-ro cargo ships;

.4 refrigerated cargo ships;

.5 wood chip carriers;

.6 cement carriers;

.7 cattle ships;

.8 cargo ships designed for carriage of upper deck cargoes and having no underdeck cargo spaces;

.9 general dry cargo ships of double bottom/double side (double skin) construction, with double bottom extending for the entire length of the ship's cargo area, and double sides extending for the length of the ship's cargo area, and for the height of the cargo hold to the upper deck[2].

7.1.1.2 These requirements apply to surveys of hull structures and piping systems in way of cargo holds, cofferdams, pipe tunnels, void spaces and fuel oil tanks within the cargo area and all ballast tanks. The requirements are additional to the classification requirements stated in Part II "Survey Schedule and Scope".

7.1.1.3 The requirements contain the minimum extent of examination, thickness measurements and tank testing. The survey shall be extended, when substantial corrosion and/or structural defects are found, and shall include an additional close-up survey when necessary.

7.1.1.4 The survey of items of technical supervision missing in this Section shall be carried out in accordance with the applicable requirements of Part II "Survey Schedule and Scope".

7.1.1.5 For general dry cargo ships with hybrid cargo hold arrangements, e.g. with some cargo holds of single side skin and others of double side skin, the requirements of this Section shall be applied only to structure in way of the single side skin cargo hold region.

7.1.2 Definitions.

The definitions used in this Section are given in 1.1.

7.1.3 Repairs.

The provisions related to repairs of hull structures are given in 1.2.

7.1.4 Thickness measurements and close-up surveys.

In any kind of survey, i.e. special, intermediate, annual or other surveys having the scope of the foregoing ones, thickness measurements, when required by Table 7.2.4.1, of structures in areas where close-up surveys are required shall be carried out simultaneously with close-up surveys.

---

[1] Requirements of 7.2.6 and 7.3.3 are also applicable to the cargo ships, which in spite of belonging to the excluded ship types indicated in 7.1.1.1, have one cargo hold.

[2] This exception is also applied to ships that are of double skin construction but with single side-skin in way of several frame spaces, e.g. in way of a cargo hold entrance or in way of forebody hull form at the forward end of the foremost cargo hold.

7.2 SPECIAL SURVEY

7.2.1 Schedule.

7.2.1.1 The procedure for assigning period of class during special surveys shall comply with the applicable requirements listed in 2.4, Part II "Survey Schedule and Scope".

7.2.2 Scope.

7.2.2.1 General.

7.2.2.1.1 The special survey shall include, in addition to the requirements of the annual survey, examination, tests and checks of sufficient extent to ensure that the hull and related piping, as required in 7.2.2.1.3, are in satisfactory condition and meet the intended purpose for the new period of class of five years to be assigned, subject to proper maintenance and operation and to periodical surveys being carried out at the due dates.

7.2.2.1.2 All cargo holds, ballast tanks, including double bottom tanks, pipe tunnels, cofferdams and void spaces bounding cargo holds, decks and outer hull shall be examined. This examination shall be supplemented by thickness measurements and testing required in 7.2.4 and 7.2.5, to ensure that the structural integrity remains effective.

The aim of the examination is to discover substantial corrosion, significant deformation, fractures, damages or other deterioration, that may be present.

7.2.2.1.3 All piping systems within the above spaces shall be examined and operationally tested under working pressure to attending surveyor's satisfaction to ensure that tightness and condition remain satisfactory.

7.2.2.1.4 The survey scope of ballast tanks converted to void spaces shall be specially considered in relation to the requirements for ballast tanks.

N o t e . The survey of automatic air pipe heads shall be carried out in accordance with Part II "Survey Schedule and Scope".

7.2.2.2 Dry dock survey.

7.2.2.2.1 A survey in dry dock is a part of the special survey. The overall and close-up surveys and thickness measurements, as applicable, of the lower portions of the cargo holds and ballast tanks shall be carried out in accordance with the applicable requirements for special survey, if not already performed. The scope of the dry dock survey is specified in 2.5, Part II "Survey Schedule and Scope".

N o t e . Lower portions of the cargo holds and ballast tanks are considered to be the parts below light ballast waterline.

7.2.2.3 Tank corrosion prevention system.

7.2.2.3.1 The RS surveyor shall examine the condition of the corrosion prevention system of ballast tanks. For ballast tanks, excluding double bottom tanks, where a hard protective coating is found in POOR condition, and it is not renewed, where a soft or semihard coating has been applied, or where a hard protective coating has not been applied from the time of construction, the tanks in question shall be examined at subsequent annual intervals. Thickness measurements shall be carried out as deemed necessary by the RS surveyor. For double bottom ballast tanks, where a hard protective coating is found in POOR condition and it is not renewed, where a soft or semihard coating has been applied, or where a hard protective coating was not applied from the time of construction, the tanks in question may be examined at subsequent annual intervals. When considered necessary by the RS surveyor, or extensive corrosion exists, thickness measurements shall be carried out.

7.2.2.3.2 Where a hard protective coating in tanks is found in GOOD condition, the scope of close-up surveys and extent of thickness measurements may be specially considered.

7.2.2.3.3 Based on survey results the RS surveyor makes a record on the necessity of ballast tanks to be examined at annual intervals into the relevant RS reporting documents, the List of Ship's Status taking into account the requirements of 7.2.2.3.1.

7.2.2.4 Hatch covers and coamings.

The hatch covers and coamings shall be surveyed as follows:

.1 a thorough inspection of the items listed in 7.3.2.3 shall be carried out;

.2 checking of the satisfactory operation of all mechanically operated hatch covers shall be made, including:

stowage and securing in open condition;

proper fit and efficiency of sealing in closed condition;

operational testing of hydraulic and power components, wires, chains and link drives;

.3 checking of the effectiveness of sealing arrangements of all hatch covers by hose testing or equivalent shall be carried out;

.4 close-up survey and thickness measurement of the hatch cover and coaming plating and stiffeners shall be carried out as given in Tables 7.2.3.2 and 7.2.4.1. Subject to cargo hold hatch covers of approved design which structurally have no access to the internals, close-up survey/thickness measurement shall be done of accessible parts of hatch covers structures.

7.2.3 Scope of overall and close-up surveys.

7.2.3.1 An overall survey of all tanks and spaces, excluding fuel oil, lubricating oil and fresh water tanks, shall be carried out at each special survey. The survey of fuel oil, lubricating oil and fresh water tanks shall be carried out in accordance with Part II "Survey Schedule and Scope".

7.2.3.2 The minimum requirements for close-up surveys at special survey are given in Table 7.2.3.2.

Table 7.2.3.2

Minimum requirements for close-up survey at special hull surveys of general dry cargo ships

Special survey No. 1 age ≤ 5	Special survey No. 2 5 < age ≤ 10	Special survey No. 3 10 < age ≤ 15	Special survey No. 4 and subsequent age > 15
(A) Selected shell frames in one forward and one aft cargo hold and associated 'tweendeck spaces *(B)* One selected cargo hold transverse bulkhead *(D)* All cargo hold hatch covers and coamings (plating and stiffeners)	*(A)* Selected shell frames in all cargo holds and 'tweendeck spaces *(B)* One transverse bulkhead in each cargo hold *(B)* Forward and aft transverse bulkheads in one side ballast tank, including stiffening system *(C)* One transverse web with associated plating and framing in two representative ballast tanks of each type (i.e. topside, hopper side, side tank or double bottom tank) *(D)* All cargo hold hatch covers and coamings (plating and stiffeners) *(E)* Selected areas of all deck plating and underdeck structure inside line of hatch openings between cargo hold hatches *(F)* Selected areas of inner bottom plating	*(A)* All shell frames in the forward lower cargo hold and 25 % of frames in each of the remaining cargo holds and 'tweendeck spaces, including upper and lower end attachments and adjacent shell plating *(B)* All cargo hold transverse bulkheads *(B)* All transverse bulkheads in ballast tanks, including stiffening system *(C)* All transverse webs with associated plating and framing in each ballast tank *(D)* All cargo hold hatch covers and coamings (plating and stiffeners) *(E)* All deck plating and underdeck structure inside line of hatch openings between cargo hold hatches *(F)* All areas of inner bottom plating	(*A)* All shell frames in all cargo holds and 'tweendeck spaces, including upper and lower end attachments and adjacent shell plating Areas *(B)* — (F) as for special survey No. 3

Special survey No. 1 age ≤ 5	Special survey No. 2 5 < age ≤ 10	Special survey No. 3 10 < age ≤ 15	Special survey No. 4 and subsequent age > 15
Notes: 1. *(A)* — *(F)* are areas of close-up survey, which include: *(A)* — cargo hold transverse frames; *(B)* — cargo hold transverse plating, stiffeners and girders; *(C)* — transverse web frame or watertight transverse bulkhead in ballast tanks; *(D)* — cargo hold hatch covers and coamings. Subject to cargo hold hatch covers of approved design which structurally have no access to the internals, close-up survey/thickness measurement shall be done of accessible parts of hatch covers structures; *(E)* — deck plating and underdeck structure inside line of hatch openings between cargo hold hatches; *(F)* — inner bottom plating. 2. Areas *(A)* — *(E)* for close-up surveys of general dry cargo ships are shown in Figs. 7.2.3.2-1 and 7.2.3.2-2. 3. Close-up survey of cargo hold transverse bulkheads shall be carried out at the following levels shown in Figs. 7.2.3.2-3 and 7.2.3.2-4: level *a* — immediately above the inner bottom and immediately above the 'tweendecks, as applicable. level *b* — mid-height of the bulkheads for holds without 'tweendecks. level *c* — immediately below the main deck plating and 'tweendeck plating.			

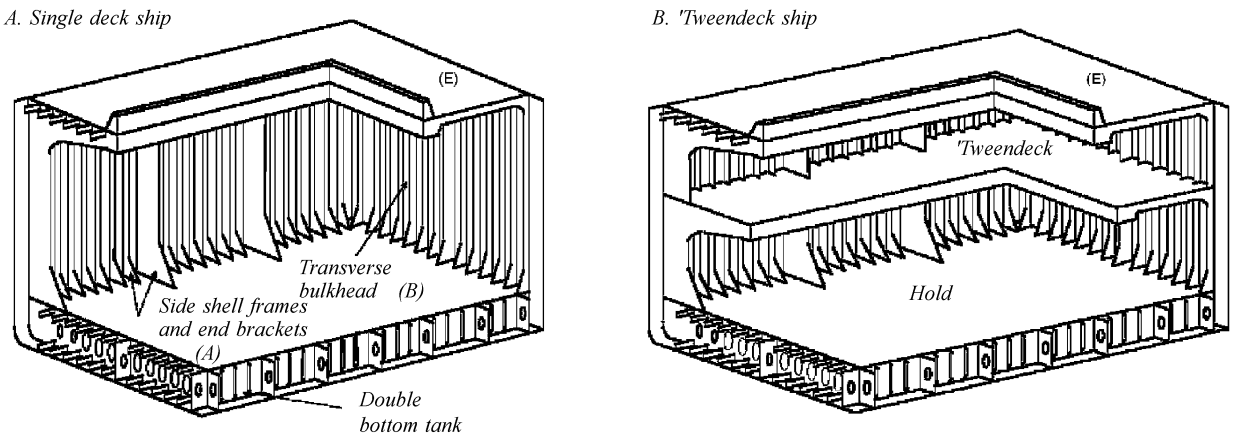

Fig. 7.2.3.2-1
Areas *(A)*, *(B)* and *(E)* for close-up surveys of general dry cargo ships

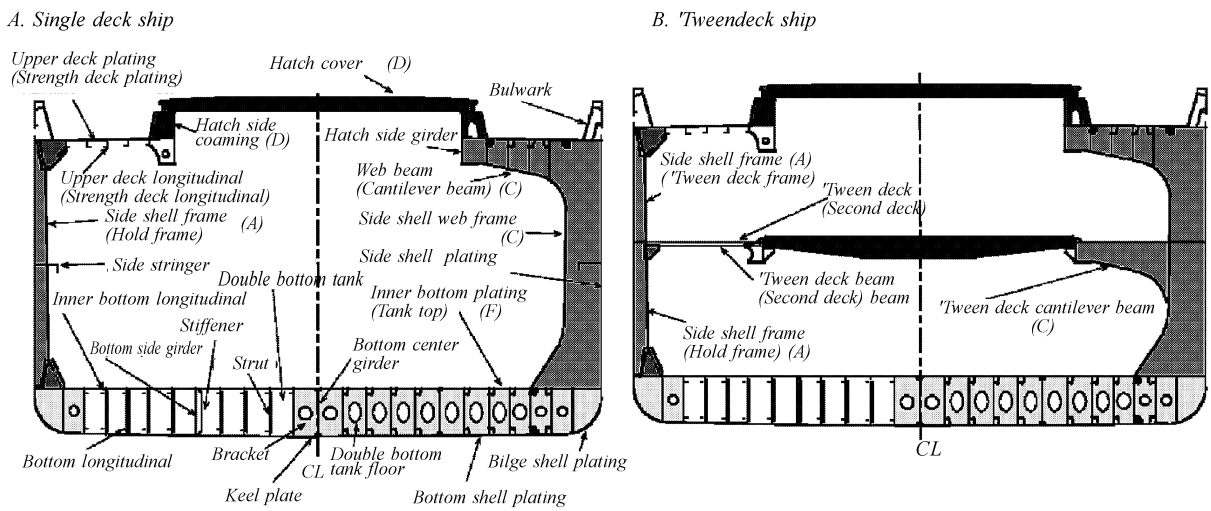

Fig. 7.2.3.2-2
Areas *A*, *C*, *D* and *F* for close-up survey of general dry cargo ships

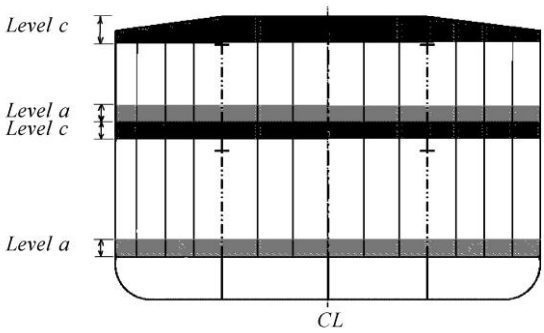

Fig. 7.2.3.2-3
Levels *a* and *c* for close-up survey of the transverse bulkhead of a cargo hold, having a 'tweendeck, for general dry cargo ships

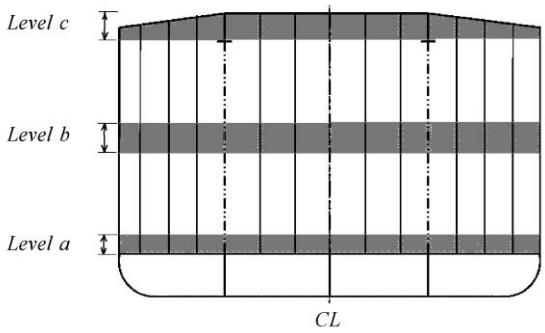

Fig. 7.2.3.2-4
Levels *a*, *b* and *c* for close-up survey of the transverse bulkhead of a 'tweendeck-free cargo hold for general dry cargo ships

7.2.3.3 The surveyor may extend the close-up survey as deemed necessary taking into account the maintenance of the spaces under survey, the condition of the corrosion prevention system and where spaces have structural arrangements or details, which have suffered defects in similar spaces or on similar ships according to available information.

7.2.3.4 For areas in spaces where hard protective coatings are found in GOOD condition, the scope of close-up surveys according to Table 7.2.3.2 may be specially considered.

7.2.3.5 The survey of automatic air pipe heads shall be carried out in accordance with Part II "Survey Schedule and Scope".

7.2.4 Extent of thickness measurements.

7.2.4.1 The minimum requirements for thickness measurements at special survey are given in Table 7.2.4.1.

Table 7.2.4.1

Minimum requirements for thickness measurements at special hull surveys of general dry cargo ships

Special survey No. 1 age ≤ 5	Special survey No. 2 5 < age ≤ 10	Special survey No. 3 10 < age ≤ 15	Special survey No. 4 and subsequent age > 15
1. Suspect areas	**1.** Suspect areas **2.** One transverse section of deck plating in way of a cargo space within the amidships 0,5*L* **3.** Measurement, for general assessment and recording of corrosion pattern, of those structural members subject to close-up survey according to Table 7.2.3.2	**1.** Suspect areas **2.** Two transverse sections within the amidships 0,5*L* in way of two different cargo spaces **3.** Measurement, for general assessment and recording of corrosion pattern, of those structural members subject to close-up survey according to Table 7.2.3.2 **4.** Within the cargo length area, each deck plate outside line of cargo hatch openings **5.** All wind and water strakes within the cargo length area **6.** Selected wind and water strakes outside the cargo length area	**1.** Suspect areas **2.** Within the cargo length area: **.1** a minimum of three transverse sections within the amidships 0,5*L* **.2** each deck plate outside line of cargo hatch openings **.3** each bottom plate, including lower turn of bilge **.4** duct keel or pipe tunnel plating and internals **3.** Measurement, for general assessment and recording of corrosion pattern, of those structural members subject to close-up survey according to Table 7.2.3.2 **4.** All wind and water strakes full length
N o t e s : 1. Thickness measurement locations shall be selected to provide the best representative sampling of areas likely to be most exposed to corrosion, considering cargo and ballast history, and arrangement and condition of protective coatings. 2. For ships less than 100 m in length, the number of transverse sections required at special survey No. 3 may be reduced to one, and the number of transverse sections at special survey No. 4 and subsequent surveys may be reduced to two.			

7.2.4.2 The surveyor may extend the thickness measurements as deemed necessary. When thickness measurements indicate substantial corrosion, the extent of thickness measurements shall be increased to determine the extent of areas of substantial corrosion. Table 7.2.4.3 may be used as guidance for these additional thickness measurements.

7.2.4.3 For areas in spaces where hard protective coatings are found in GOOD condition, the extent of thickness measurement according to Table 7.2.4.1 may be specially considered.

Table 7.2.4.3

Guidance for additional thickness measurements in way of substantial corrosion

Structural member	Extent of measurement	Pattern of measurement
Plating	Suspect area and adjacent plates	5 point pattern over 1 m^2 area
Stiffeners	Suspect area	3 measurements each in line across web and flange

7.2.4.4 Transverse sections shall be chosen where the largest reductions are suspected to occur or are revealed from deck plating measurements.

7.2.5 Extent of tank testing.

7.2.5.1 All boundaries of ballast tanks and deep tanks used for water ballast within the cargo area, and representative fuel oil tanks shall be pressure tested.

7.2.5.2 The surveyor may extend the tank testing as deemed necessary.

7.2.5.3 Fuel oil tanks shall be tested with a head of liquid to the highest point that liquid will rise under service conditions. Tank testing of fuel oil tanks may be specially considered based on a satisfactory external examination of the tank boundaries, and a confirmation from the master stating that the pressure testing has been carried out according to the requirements with satisfactory results.

7.2.6 Additional requirements for one hold cargo ships (refer to Note to 7.1.1.1) after determining compliance with SOLAS II-2/25 as amended.

7.2.6.1 For ships complying with the requirements of SOLAS II-2/25 as amended for water level detectors, the special survey shall include an examination and a test of the water ingress detection systems and of their alarms.

7.3 ANNUAL SURVEY

7.3.1 Schedule.

7.3.1.1 Annual surveys shall be held within 3 months before or after the anniversary date (i.e. anniversary date ± 3 months) from the date of the initial survey or of the date credited for the previous special survey.

7.3.2 Scope.

7.3.2.1 General.

7.3.2.1.1 The survey shall consist of an examination for the purpose of ensuring, as far as practicable, that the hull, hatch covers, coamings and piping are maintained in a satisfactory condition.

7.3.2.2 Survey of the hull shall include:

.1 examination of the hull plating and its closing appliances as far as can be seen;

.2 examination of watertight penetrations as far as practicable.

7.3.2.3 Survey of weather decks, hatch covers and coamings.

7.3.2.3.1 Confirmation shall be obtained that no unapproved changes have been made to the hatch coamings, hatch covers and their securing and sealing devices since the last survey.

7.3.2.3.2 Where mechanically operated steel covers are fitted, checking the satisfactory condition of:

.1 hatch covers, including close-up survey of hatch cover plating;

.2 tightness devices of longitudinal, transverse and intermediate cross junctions (gaskets, gasket lips, compression bars, drainage channels);

.3 clamping devices, retaining bars, cleating;

.4 chain or rope pulleys;

.5 guides;

.6 guide rails and track wheels;

.7 stoppers, etc;

.8 wires, chains, gypsies, tensioning devices;

.9 hydraulic system essential to closing and securing;

.10 safety locks and retaining devices.

7.3.2.3.3 Where portable covers, wooden or steel pontoons are fitted, checking the satisfactory condition, where applicable, of:

.1 wooden covers and portable beams, carriers or sockets for the portable beam, and their securing devices;

.2 steel pontoons;

.3 tarpaulins;

.4 cleats, battens and wedges;

.5 hatch securing bars and their securing devices;

.6 guide plates and chocks;

.7 compression bars, drainage channels and drain pipes.

7.3.2.3.4 Checking the satisfactory condition of hatch coaming plating and their stiffeners, including a close-up survey.

7.3.2.3.5 Random checking of the satisfactory operation of mechanically operated hatch covers shall be made, including:

.1 stowage and securing in open position;

.2 proper fit and efficiency of sealing in closed position;

.3 operational testing of hydraulic and power components, wires, chains and link drives.

N o t e . The survey of air pipes, flame screens on vents and ventilators shall be carried out in accordance with Part II "Survey Schedule and Scope".

7.3.2.4 Survey of suspect areas.

Suspect areas identified during survey including at previous surveys shall be examined. Areas of substantial corrosion identified during current survey or at previous surveys shall have thickness measurements taken. The extent of thickness measurements shall be increased to determine the extent of areas of substantial corrosion. Table 7.2.4.3 may be used as guidance for these additional thickness measurements. These extended thickness measurements shall be carried out before the annual survey is credited as completed.

7.3.2.5 Survey of cargo holds.

7.3.2.5.1 For ships 10 — 15 years of age, the following shall apply:

.1 overall survey of one forward and one after cargo hold and their associated 'tweendeck spaces;

.2 when considered necessary by the surveyor, or where extensive corrosion exists, thickness measurements shall be carried out. If the results of these thickness measurements indicate that substantial corrosion is found, then the extent of thickness measurements shall be increased to determine the extent of areas of substantial corrosion. Table 7.2.4.3 may be used as guidance for these additional measurements. These extended thickness measurements shall be carried out before the annual survey is credited as completed.

7.3.2.5.2 For ships over 15 years of age, the following shall apply:

.1 overall survey of all cargo holds and 'tweendeck spaces;

.2 close-up examination of sufficient extent, minimum 25 % of frames, to establish the condition of a lower region of shell frames, including approximately the lower one third length of side frames at side shell and side frame end attachments and the adjacent shell plating in a forward lower cargo hold and one other selected lower cargo hold. Where this level of survey reveals a need for remedial measures, the survey shall be extended to include a close-up survey of all shell frames and adjacent shell plating of those cargo holds and associated 'tweendeck spaces (as applicable), as well as a close-up survey of sufficient extent of all remaining cargo holds and tweendeck spaces (as applicable);

.3 when considered necessary by the surveyor, or where extensive corrosion exists, thickness measurement shall be carried out. If the results of these thickness measurements indicate that substantial corrosion is found, then the extent of thickness measurements shall be increased to determine the extent of areas of substantial corrosion. Table 7.2.4.3 may be used as guidance for these additional measurements. These extended thickness measurements shall be carried out before the annual survey is credited as completed;

.4 where a protective coating in cargo holds, as applicable, is found to be in a GOOD condition, the scope of close-up survey may be specially considered.

.5 all piping, including overboard piping, and penetrations in watertight structures shall be examined.

7.3.2.6 Survey of ballast tanks.

7.3.2.6.1 Survey of ballast tanks when required as a consequence of the results of a special survey (refer to 7.2.2.3) and an intermediate survey (refer to 7.4.2) shall be carried out. When considered necessary by the RS surveyor, or where extensive corrosion exists, thickness measurements shall be carried out. If the results of these thickness measurements indicate that substantial corrosion is found, then the extent of thickness measurements shall be increased to determine the extent of areas of substantial corrosion. Table 7.2.4.3 may be used as guidance for these additional measurements. These extended thickness measurements shall be carried out before the annual survey is credited as completed.

7.3.3 Additional requirements for single hold cargo ships (refer to the Note to 7.1.1.1) after determining compliance with SOLAS II-2/25 as amended.

7.3.3.1 For ships complying with the requirements of SOLAS II-2/25 as amended, for water level detectors, the special survey shall include an examination and a test, at random, of the water ingress detection systems and of their alarms.

7.4 INTERMEDIATE SURVEY

7.4.1 Schedule.

7.4.1.1 The intermediate survey shall be held at or between either the 2nd or 3rd annual survey.

7.4.1.2 Those items of technical supervision, which are additional to the requirements of annual survey, may be surveyed either at or between the 2nd and 3rd annual survey.

7.4.1.3 A survey planning meeting shall be held prior to the commencement of the survey.

7.4.1.4 Concurrent crediting to both intermediate survey and special survey for surveys and thickness measurements of spaces are not acceptable.

7.4.2 Scope.

7.4.2.1 General.

7.4.2.1.1 In addition to the scope of the annual survey specified in 7.3, the scope of the intermediate survey shall include, depending on the ship's age, the requirements in 7.4.2.2 — 7.4.2.4.

7.4.2.2 Survey of ships 5 — 10 years of age.

For ships 5 — 10 years of age, the following shall apply:

.1 for ballast tanks:

.1.1 for ballast tanks, an overall survey of representative tanks selected by the RS surveyor shall be carried out. If such overall survey reveals no visible structural defects, the examination may be limited to a verification that the corrosion prevention system remains efficient;

.1.2 where a POOR coating condition, corrosion or other defects are found in water ballast tanks or where a soft or semihard coating has been applied, or a hard protective coating was not applied from the time of construction, the examination shall be extended to other ballast tanks of the same type;

.1.3 in ballast tanks other than double bottom tanks, where a hard protective coating is found in POOR condition, and it is not renewed, or where a soft or semihard coating has been applied, or where a hard protective coating was not applied from the time of construction, the tanks in question shall be examined and thickness measurements shall be carried out as considered necessary at subsequent annual intervals.

Where a hard protective coating is found in POOR condition in ballast double bottom tanks, and it is not renewed, or where the soft or semihard coating has been applied, or where the hard protective coating has not been applied from the time of construction, the tanks in question may be examined at subsequent annual intervals. When considered necessary by the RS surveyor, or where extensive corrosion exists, thickness measurements shall be carried out;

.1.4 in addition to the requirements above, suspect areas identified at previous surveys shall be surveyed in accordance with the provisions of 7.3.2.4;

.1.5 based on survey results the RS surveyor makes a record on the necessity of ballast tanks to be examined at annual intervals into the relevant RS reporting documents, the List of Ship's Status taking into account the requirements of 7.4.2.2.1.3;

.2 for cargo holds:

.2.1 an overall survey of one forward and one after cargo hold and their associated 'tweendeck spaces shall be carried out;

.2.2 suspect areas identified at previous surveys shall be surveyed in acordance with the provisions of 7.3.2.4.

7.4.2.3 Survey of ships 10 — 15 years of age.

For ships 10 — 15 years of age, the following shall apply:

.1 for ballast tanks:

.1.1 an overall survey of all ballast tanks shall be carried out. If such overall survey reveals no visible structural defects, the examination may be limited to a verification that the corrosion prevention system remains efficient;

.1.2 in ballast tanks other than double bottom tanks, where a hard protective coating is found in POOR condition, and it is not renewed, or where a soft or semihard coating has been applied, or where a hard protective coating was not applied from the time of construction, the tanks in question shall be examined and thickness measurements carried out as considered necessary at subsequent annual intervals.

Where a hard protective coating is found in POOR condition in ballast double bottom tanks, and it is not renewed, or where the soft or semihard coating has been applied, or where the hard protective coating has not been applied from the time of construction, the tanks in question may be examined at subsequent annual intervals. When considered necessary by the RS surveyor, or where extensive corrosion exists, thickness measurements shall be carried out;

.1.3 in addition to the requirements above, suspect areas identified at previous surveys shall be surveyed in acordance with the provisions of 7.3.2.4;

.1.4 based on survey results the RS surveyor makes a record on the necessity of ballast tanks to be examined at annual intervals into the relevant RS reporting documents, the List of Ship's Status taking into account the requirements of 7.4.2.3.1.2;

.2 for cargo holds:

.2.1 an overall survey of all cargo holds and 'tweendeck spaces shall be carried out;

.2.2 suspect areas identified at previous surveys shall be surveyed in acordance with the provisions of 7.3.2.4;

.2.3 when considered necessary by the surveyor, or where extensive corrosion exists, thickness measurements shall be carried out. If the results of these thickness measurements indicate that substantial corrosion is found, then the extent of thickness measurements shall be increased to determine the extent of areas of substantial corrosion. Table 7.2.4.3 may be used as guidance for these additional measurements. These extended thickness measurements shall be carried out before the survey is credited as completed.

7.4.2.4 Survey of ships over 15 years of age.

For ships over 15 years of age, the following shall apply:

.1 the requirements of the intermediate survey shall be to the same extent as the previous special survey as required in 7.2, except for thickness measurements of each bottom plate, including the lower turn of bilge as required in 2.3 of Table 7.2.4.1. However, tank testing specified in 7.2.5, the survey of automatic air pipe heads (refer to the Notes to 7.2.2.1.4 and 7.2.3.4) and internal examination of fuel oil, lubricating oil and fresh water tanks (refer to 7.2.3.1) are not required unless deemed necessary by the RS attending surveyor;

.2 the intermediate survey may be commenced at the second annual survey and be progressed during the succeeding year with a view to completion at the third annual survey;

.3 in lieu of the requirements in 7.2.2.2, the in-water survey may be performed with the use of underwater television taking into account applicable provisions of 2.5, Part II "Survey Schedule and Scope".

7.5 PREPARATIONS FOR SURVEY

7.5.1 The provisions related to preparations for survey are given in 1.3.

7.6 PROCEDURES FOR THICKNESS MEASUREMENTS

7.6.1 The provisions related to procedures for thickness measurements of hull structures are given in 1.5.

8 SURVEYS OF GAS CARRIERS

8.1 GENERAL

8.1.1 Application.

8.1.1.1 These provisions apply to all gas carriers including ships of gross tonnage below 500 intended for carriage of liquefied gases in bulk. Such ships shall comply with the requirements of the present Section, in addition to the applicable requirements of 2.2 — 2.4, Part II "Survey Schedule and Scope" and Sections 2 and 4 of this Part.

8.1.1.2 The provisions apply to surveys of hull structure and piping systems in way of pump rooms, compressor rooms, cofferdams, pipe tunnels, void spaces and fuel oil tanks within the cargo area and all ballast tanks. The requirements are additional to the classification requirements given in Part II "Survey Schedule and Scope".

8.1.1.3 The provisions contain the minimum extent of examination, thickness measurements and tank testing. The survey shall be extended when substantial corrosion and/or structural defects are found and include additional close-up survey, when necessary.

8.1.1.4 The requirements for items of technical supervision are given in the Rules for the Classification and Construction of Ships Carrying Laquefied Gases in Bulk and Rules for the Classification and Construction of Ships Carrying Compressed Natural Gas.

8.1.1.5 When various chemicals in bulk are carried on gas carriers, the requirements of Section 4 of this Part shall be met.

8.1.2 Definitions.

The definitions applied to this Section are given in 1.1 of this Part of the Rules and in the Rules for the Classification and Construction of Ships Carrying Laquefied Gases in Bulk and Rules for the Classification and Construction of Ships Carrying Compressed Natural Gas.

8.1.3 Repairs.

The provisions concerning repairs of hull structures are set forth in 1.2.

8.1.4 Thickness measurements and close-up surveys.

In any kind of survey, i.e. special, intermediate, annual or other surveys having the scope of the foregoing ones, thickness measurements, when required by Table 8.4.2.6.1, of structures in areas where close-up surveys are required shall be carried out simultaneously with close-up surveys.

8.1.5 International conventions and codes.

Additional technical and general supervision requirements concerning gas carriers regulated by the applicable international conventions and codes are listed in the Guidelines.

8.1.6 Scope of surveys.

8.1.6.1 Subject to surveys are all installations, equipment and outfit related to the carriage and control of cargo handling operations with liquefied gases. These surveys also include surveys required by the IGC Code.

The requirements for fire-fighting and safety equipment required by the International Code for Protection of Personnel, as well as the requirements for other equipment and outfit, which are not required by the Rules for the Classification and Construction of Ships Carrying Laquefied Gases in Bulk and Rules for the Classification and Construction of Ships Carrying Compressed Natural Gas are not included in these Rules.

8.1.6.2 The scope of surveys referred to in the IGC Code and in 8.2 — 8.4 of this Part of the Rules is the minimum mandatory set of requirements for general items of technical supervision and general scope of survey applicable to particular ship and item structure based on the results of the previous surveys and the survey in question as also on the review of the survey report file. The surveyor specifies the required extent of examinations, measurements and testing of the items and applies, where necessary, modified or additional

requirements proceeding from the final purpose of the survey — verification that applicable requirements for the ship, items of technical supervision and their proper technical conditions have been complied with.

For ships and items of unusual design the scope and procedure of survey shall be established by the Register in each particular case.

8.1.6.3 When gas carriers are surveyed, the bow and stern emergency towing arrangements shall be surveyed (for ships with deadweight exceeding 20000 t).

8.2 ANNUAL SURVEY

8.2.1 Schedule.

8.2.1.1 Annual surveys shall be held within 3 months before or after anniversary date from the date of the initial classification survey or of the date credited for the last special survey.

8.2.2 Scope.

8.2.2.1 General.

8.2.2.1.1 In addition to the surveys required by Section 3 of Part II "Survey Schedule and Scope", components, equipment and outfit shall be surveyed to verify that they comply with the RS requirements.

8.2.2.1.2 At annual survey the required operational documentation (instruction and information material) shall be verified as being on board, including:

approved information on the ship loading (based on survivability conditions) depending on the ship type, containing Information on Damaged Trim and Stability;

approved information on safe carriage of cargoes, including cargo plan;

approved date on maximum permissible filling of tanks.

8.2.2.1.3 Ship records and accompanying documents, including ship log books shall be checked with regard to proper functioning of the cargo containment, cargo handling systems and other equipment, technical condition of items, repairs and replacements, and confirmation of the fact that the emergency shutdown system, as specified in 8.2.2.5.2 has been tested. The hours per day of reliquefaction plans or the boil-off rate and the inert gas consumption shall be considered during the survey. Availability of a copy of the IGC Code or the rules containing the provisions of the Code (for ships surveyed by the Register, Rules for the Classification and Construction of Ships Carrying Laquefied Gases in Bulk and Rules for the Classification and Construction of Ships Carrying Compressed Natural Gas) on board shall be confirmed.

8.2.2.1.4 The relevant instructions and information material, such as cargo plans, filling limit information for cargo tanks, cooling down procedures, etc. shall be available on board.

8.2.2.1.5 The survey shall be preferably carried out during a loading or discharging operation.

Access to cargo tanks or inerted cargo hold spaces necessitating gas freeing is not normally necessary unless required by the surveyor in particular cases.

8.2.2.1.6 Spaces and zones used in cargo handling operations (e.g. cargo control rooms, cargo pump and compressor rooms, cargo handling machinery motor rooms, air-locks) shall be examined with respect to general condition and maintenance.

8.2.2.2 Examination of the hull.

8.2.2.2.1 The survey shall consist of an examination for the purpose of ensuring, as far as practicable, that the hull and piping are maintained in a satisfactory condition.

8.2.2.2.2 Hull survey shall include:

.1 examination of the hull plating and its closing appliances, as far as can be seen;

.2 examination of watertight penetrations, as far as practicable.

8.2.2.2.3 Examination of weather decks:

.1 examination of flame screens on vents to all hopper side tanks;

.2 examination of bunker and vent piping systems;

.3 examination of all cargo pump room and compressor room bulkheads for signs of leakage or fractures and, in particular, the sealing arrangements of all penetrations of pump room and compressor room bulkheads;

.4 examination of the condition of all piping systems, except those covered by 8.2.2.3, 8.2.2.4, 8.2.2.7, 8.2.2.8.

N o t e . For survey of air pipes, flame screens on vents and ventilators refer to 2.2.3.7.6 — 2.2.3.7.8 of Part II "Survey Schedule and Scope".

8.2.2.2.4 Survey of suspect areas.

Suspect areas detected during surveys including at previous surveys, shall be examined. Areas of substantial corrosion identified during current or at previous surveys shall have thickness measurements taken. The extent of thickness measurements shall be increased to determine the areas of substantial corrosion. Table 8.2.2.2.4 may be used as guidance for these additional thickness measurements. These extended thickness measurements shall be carried out before the annual survey is credited as completed.

T a b l e 8.2.2.2.4

Guidance for additional thickness measurements in areas of substantial corrosion

Structural member	Extent of measurement	Pattern of measurement
Plating	Suspect area and adjacent plates	5 point pattern over 1 m^2 area
Stiffeners	Suspect areas	3 measurements each in line across web and flange

8.2.2.2.5 Survey of ballast tanks.

Survey of ballast tanks when required as a consequence of the results of a special survey (refer to 8.4) and an intermediate survey (refer to 8.3) shall be carried out. When considered necessary by the RS surveyor, or where extensive corrosion exists, thickness measurements shall be carried out. If the results of these thickness measurements indicate that substantial corrosion is found, then the extent of thickness measurements shall be increased to determine the extent of areas of substantial corrosion. Table 8.2.2.2.4 may be used as guidance for these additional measurements. These extended thickness measurements shall be carried out before the annual survey is credited as completed.

8.2.2.3 Survey of cargo-handling systems.

8.2.2.3.1 The cargo pipes and machinery involved in cargo handling, including cargo and process piping systems, compensators, cargo heat exchangers, vapourizers, pumps and cargo hoses, in general, shall be visually examined and, as far as possible, in operation.

8.2.2.3.2 It shall be verified during the survey that emergency shut-down valves at shore connections and cargo tanks, and operation of these valves with automatic stopping of cargo pumps and compressors in case of fire are in satisfactory condition. Emergency valves shall be tested without cargo flow in the pipe lines.

8.2.2.3.3 It shall be verified during the survey that spool pieces or other approved equipment used for segregation of cargo are available and maintained in a satisfactory condition.

8.2.2.3.4 The required distance pieces for piping separation shall be verified as being on board.

8.2.2.4 Survey of venting system.

8.2.2.4.1 Venting systems for cargo tanks, interbarrier spaces (for tanks of type A) shall be externally examined. It shall be verified that the cargo tank relief valves are sealed and the Register certificates for them are on board. Additional valves with interlocking and actuating devices, if any, vacuum safety valves or pressure relays with an alarm to stop pumping from the tanks or refrigeration system, as well as relief valves for relieving the interbarrier spaces and cargo tanks, shall be checked.

8.2.2.4.2 Protection and frame screens shall be examined to ensure that they are clean.

8.2.2.5 Survey of instrumentation and safety systems.

8.2.2.5.1 Measuring and control instrumentation with regard to pressure, temperature and liquid level shall be surveyed to ensure that the instruments are in good working order by one or more of the following methods:

external examination;

comparing of readings from different indicators;

consideration of readings with regard to the actual cargo loaded;

verification of maintenance records and/or brands to confirm mandatory testing;

verification of maintenance records in accordance with guidelines for maintenance of instrumentation and safety systems.

8.2.2.5.2 Emergency shut-down valves at shore connections and cargo tanks shall be surveyed without cargo flow in the pipe lines. It shall be verified that operation of the emergency shut-down system will cause the cargo pumps and compressors to stop.

8.2.2.5.3 The fixed and portable gas detection equipment including indicators and alarms shall be operationally tested.

8.2.2.6 Survey of electrical installations.

Electrical equipment and cables together with their supports in gas-dangerous spaces and zones shall be examined to check for defective equipment of a certified safe type.

8.2.2.7 Survey of ventilation systems.

Ventilation systems for all spaces in the cargo area, including pump rooms, cargo compressor rooms, electrical motor rooms, cargo operation control rooms, and other spaces used in cargo handling shall be surveyed to verify their compliance with the RS requirements.

8.2.2.8 Survey of inert gas/dry air systems.

Inert gas/dry air systems including means for prevention of back-flow of cargo vapour to gas-free spaces shall be surveyed to verify their compliance with the RS requirements.

For membrane containment systems normal functioning of nitrogen control system for insulation and interbarrrier spaces shall be confirmed to the surveyor by the master of the ship.

8.2.2.9 Survey of fire protection.

Fire-fighting systems and equipment shall be surveyed to verify that all fire-fighting systems, including the drenching and dry powder systems comply with the RS requirements.

8.2.2.10 Survey of reliquefaction unit for cargo vapours.

Reliquefaction unit for cargo vapours shall be surveyed to the extent necessary to confirm good working order of machinery and equipment of the unit with its service systems. During the survey it shall be confirmed that the overall performance of the unit is duly maintained and it is operated in compliance with the requirements specified by the manufacturer.

8.2.2.11 Survey of regasification unit.

Regasification unit shall be surveyed together with the cargo system to the extent necessary to confirm good working order of the unit with operational testing of temperature, heating medium and sea water control systems serving the unit. During the survey it shall be confirmed that the overall performance of the unit is duly maintained.

8.2.2.12 Survey of gas combustion unit.

Gas combustion unit shall be surveyed to the extent necessary to confirm good working order of the unit with operational testing of fans serving the unit and exhaust gas temperature and loss of flame control system according to 4.3.13, Part VI "Systems and Piping" of the Rules for the Classification and Construction of Ships Carrying Liquefied Gases in Bulk.

8.2.2.13 Miscellaneous.

The following items shall be surveyed to verify their condition and correct functioning:

the means for ensuring the gas-tightness of the wheelhouse windows and doors, side scuttles in the end bulkheads of the superstructure and deckhouse facing the cargo area or stern loading/unloading arrangements and closing devices of all air intakes and openings into accommodation, service and control spaces;

all side scuttles of fixed type in way of cargo area and stern loading/unloading arrangements shall be tested for gas tightness;

the sealing arrangements for tanks or tank domes penetrating the decks or tankovers;

drip trays or insulation for deck protection against cargo leakage;

the arrangements for heating hull structural elements, if provided;

electrical bonding of cargo piping systems;

arrangements for burning gas boil-off, including alarms and safety systems.

8.2.2.14 Upon satisfactory results of annual survey of all parts of the ship, as required by 2.2 of Part II "Survey Schedule and Scope" and by 8.2.2.1 — 8.2.2.13 of this Part, validity of all ship's documents and the International Certificate of Fitness for the Carriage of Liquefied Gases in Bulk is endorsed.

8.3 INTERMEDIATE SURVEY

8.3.1 Schedule.

8.3.1.1 The intermediate survey shall be held at or between either the second or third annual survey.

8.3.1.2 Those items of technical supervision, which are additional to the requirements of the annual surveys, may be surveyed either at or between the second and third annual survey.

8.3.1.3 A survey planning meeting shall be held prior to the commencement of the survey.

8.3.1.4 Concurrent crediting to both intermediate survey and special survey for surveys and thickness measurements of spaces are not acceptable.

8.3.2 Scope.

8.3.2.1 General.

8.3.2.1.1 In addition to surveys and tests required by 8.2, the items specified in 8.3.2.3 — 8.3.2.7 shall be surveyed at the second or third annual survey, irrespective of the ship age, unless expressly provided otherwise.

Intermediate survey supplements the previous annual survey by operational testing of the cargo handling controls, automatic control devices, alarms and safety systems to verify their correct functioning.

8.3.2.1.2 Surveys and tests at intermediate survey shall be carried out with the ship in a gas-free condition.

8.3.2.2 Hull survey.

8.3.2.2.1 The scope of the second or third annual survey shall be extended to include the following:

ballast tanks:

.1 for ships between 5 and 10 years of age, an overall survey of representative ballast tanks shall be carried out. If there is no hard protective coating, soft or semihard coating or POOR coating condition, the examination shall be extended to other ballast tanks of the same type;

.2 for ships over 10 years of age, an overall survey of all ballast tanks shall be carried out;

.3 if such examinations reveal no visible structural defects, the examination may be limited to verification that the corrosion prevention system remains efficient;

.4 for ballast tanks, excluding double bottom tanks, if there is no hard protective coating, soft or semihard coating, or POOR coating condition and it is not renewed, the tanks in question shall be internally examined at subsequent annual intervals;

.5 double bottom ballast tanks where there is no hard protective coating, soft or semihard coating, or POOR coating condition and it is not renewed, the tanks in question may be internally examined at subsequent annual intervals;

.6 based on survey results the RS surveyor makes a record on the necessity of ballast tanks to be examined at annual intervals into the relevant RS reporting documents, the List of Ship's Status taking into account the requirements of 8.3.2.2.1.4 and 8.3.2.2.1.5.

8.3.2.2.2 The minimum requirements for close-up surveys at intermediate survey are given in Table 8.3.2.2.2.

Table 8.3.2.2.2

Table of the minimum requirements for close-up survey at hull intermediate surveys of liquefied gas carriers

Survey of ships 10 < age ≤ 15	Survey of ships age >15
Close-up survey of: all web frames and both transverse bulkheads in a representative ballast tank[1,2] the upper part of one web frame in another representative ballast tank one transverse bulkhead in another representative ballast tank[2]	Close-up survey of: all web frames and both transverse bulkheads in two representative ballast tanks[1,2]
[1] Complete transverse web frame, including adjacent structural members. [2] Transverse bulkhead complete, including girder system and adjacent members, and adjacent longitudinal bulkhead structure. Notes: 1. Ballast tanks include topside, double hull side, double bottom, hopper side, or any combined arrangement of the aforementioned, and peak tanks where fitted. 2. For areas in tanks where protective coating is found to be in GOOD condition, the scope of close-up survey may be specially considered by the Register. 3. For ships having independent tanks of type C, with a midship section similar to that of a general cargo ship, the scope of close-up surveys may be specially considered by the Register. Typical midship sections of liquefied gas carriers are shown in Fig. 8.4.2.5.2. 4. The scope of close-up surveys may be extended by the surveyor as deemed necessary, taking into account the maintenance of the tanks under survey, the condition of the corrosion prevention system and also in the following cases: in particular, in tanks having structural arrangements or details, which have suffered defects in similar tanks, or on similar ships according to available information; in tanks having structures approved with reduced scantlings.	

8.3.2.3 Survey of cargo handling systems and tanks.

8.3.2.3.1 The piping and machinery, used in cargo handling, including cargo and process piping systems, compensators, cargo heat exchangers, pumps and compressors shall be visually examined.

8.3.2.3.2 It shall be verified that ship cargo hoses and flexible joints are of an approved type and comply with the RS requirements. Hoses shall be pressure tested and tested for electric conductivity at the second or third annual survey.

8.3.2.3.3 The piping onthe open deck used in operation of the ship (for cargo, oil fuel and water ballast transfer) shall be surveyed to verify their compliance with the RS requirements.

8.3.2.3.4 For gas carriers over 10 years of age, which carry cargoes different from those indicated in the International Certificate of Fitness for the Carriage of Liquefied Gases in Bulk, two cargo tanks shall be internally surveyed as deemed necessary by the surveyor for the tanks, which form part of the ship structure, as well as double bottom and ballast tanks, if any, as deemed necessary by the surveyor.

8.3.2.3.5 The piping in the cargo tanks shall be surveyed to verify its satisfactory condition.

8.3.2.4 Survey of the venting system.

8.3.2.4.1 If cargo tanks are equipped with relief valves with non-metallic membranes in the main or pilot valves, such non-metallic membranes shall be replaced with new ones and the valves shall be adjusted, operationally tested and sealed. This item need not to be carried out simultaneously with intermediate surveys, provided the non-metallic membranes are renewed at intervals not exceeding 3 years.

8.3.2.4.2 Means for drainage of the venting piping, where provided, shall be surveyed to verify that protection screens and flame screens are in a satisfactory condition.

8.3.2.5 Survey of instrumentation and safety systems.

8.3.2.5.1 The safety, control and alarm systems of the cargo installation shall be visually examined and tested with a changing pressure; temperature and level sensors shall be

checked by comparing their indications with those of test instruments. Simulated tests may be accepted for sensors, which are not accessible, or for sensors located within cargo tanks or inerted cargo hold spaces. The survey shall include testing of alarm and safety functions.

8.3.2.5.2 The piping of the gas detection system shall be visually inspected for corrosion and damage as far as practicable. The integrity of the suction pipes between suction points and analyzing units shall be verified as far as possible.

8.3.2.5.3 Gas detection equipment, including indication and alarms, shall be verified for correct functioning. Gas detectors shall be calibrated or verified with sample gases. The piping of the gas detection system shall be visually inspected for corrosion and damage. The integrity of the suction pipes between suction points and analyzing units shall be verified as far as possible.

8.3.2.6 Survey of electrical equipment.

Overall survey of electrical equipment and cables in gas-dangerous spaces and zones, such as cargo pump rooms and zones adjacent to cargo tanks, shall be carried out to detect defective electrical equipment of a certified safe type, improperly installed wiring, non-approved lighting and fixtures, and dead-end wiring; insulation resistance of circuits shall be tested.

Particular attention shall be given to the following:

protective earthing (random checking shall be carried out);

integrity of safety enclosures;

damage of outer sheath of cables;

functional testing of pressurized equipment and of associated alarms;

testing of systems for de-energizing non-certified safe electrical equipment located in spaces protected by air-locks, such as electrical motor rooms, cargo control rooms, etc.;

measurements of insulation resistance. Such measurements shall be made only when the ship is in the gas-free or inerted condition. (Where proper records of measurements are maintained consideration may be given to accepting recent insulation resistance readings by the ship's crew).

When the ship is in a gas-free condition, it shall be verified that cargo tanks are electrically bonded with the hull.

N o t e . Refer also to 2.2.7.9, 2.3.4 and 2.4.7.10, Part II "Survey Schedule and Scope".

8.3.2.7 Survey of inert gas system.

The inert gas system shall be tested in compliance with the procedure approved by the Register.

8.3.2.8 Completion of survey.

If the requirements of the International Code for the Construction and Equipment of Ships Carrying Liquefied Gases in Bulk are met and upon satisfactory completion of the survey, the Cargo Ship Safety Construction Certificate and the Cargo Ship Safety Equipment Certificate issued to the ship are endorsed.

Upon satisfactory results of intermediate survey the International Certificate of Fitness for the Carriage of Liquefied Gases in Bulk and International Certificate of Fitness for the Carriage of Dangerous Chemicals in Bulk are endorsed.

8.3.2.9 Miscellaneous.

Instrumentation and safety systems for burning cargo as fuel shall be examined according to the requirements of 8.3.2.5.1.

8.4 SPECIAL SURVEY

8.4.1 Schedule.

8.4.1.1 The procedure for assigning period of class during special surveys shall comply with the applicable requirements listed in 2.4, Part II "Survey Schedule and Scope".

8.4.2 Scope.

8.4.2.1 General.

In addition to surveys made in compliance with the requirements of 2.4, Part II "Survey Schedule and Scope" and 8.3 of this Part, the surveys specified in 8.4.2.2 — 8.4.2.15 shall be carried out.

8.4.2.2 Hull survey.

8.4.2.2.1 The special survey shall include, in addition to the requirements of the annual surveys, examination, tests and checks of sufficient extent to ensure that the hull and related piping, as required in 8.4.2.2.3, are in satisfactory condition and meet the intended purpose for the new period of class of 5 years to be assigned, subject to proper maintenance and operation and to periodical surveys being carried out at the due dates.

8.4.2.2.2 Ballast tanks, including double bottom tanks, pump rooms, compressor rooms, pipe tunnels, cofferdams and void spaces bounding cargo tanks, decks and outer hull shall be examined, and this examination shall be supplemented by thickness measurements and testing as required in 8.4.2.6 and 8.4.2.7, to ensure that the structural integrity remains effective.

The aim of the examination is to discover substantial corrosion, significant deformation, fractures, damages or other structural deterioration, that may be present.

8.4.2.2.3 All piping systems within the above spaces shall be examined and operationally tested to working pressure to attending surveyor's satisfaction to ensure that tightness and condition remain satisfactory.

8.4.2.2.4 The survey scope of ballast tanks converted to void spaces shall be specially considered in relation to the requirements for ballast tanks.

N o t e . Survey of automatic air pipe heads shall be carried out in compliance with the requirements of Part II "Survey Schedule and Scope".

8.4.2.3 Dry dock survey.

8.4.2.3.1 A survey in dry dock shall be a part of the special survey. The overall and close-up surveys and thickness measurements, as applicable, of the lower portions of the ballast tanks shall be carried out in accordance with the applicable requirements for special survey, if not already performed. The scope of surveys in dry dock is described in 2.5, Part II "Survey Schedule and Scope".

N o t e . Lower portions of the ballast tanks are considered to be the parts below light ballast water line.

8.4.2.4 Tank corrosion prevention system.

8.4.2.4.1 The RS surveyor shall examine the condition of corrosion prevention system of ballast tanks.

For tanks used for water ballast, excluding double bottom tanks, where a hard protective coating is found in POOR condition and it is not renewed, where soft or semihard coating has been applied, or where a hard protective coating was not applied from time of construction, the tanks in question shall be examined at subsequent annual intervals. Thickness measurements shall be carried out as deemed necessary by the RS surveyor.

Where a hard protective coating is found in POOR condition in water ballast double bottom tanks and it is not renewed, where a soft or semihard coating has been applied, or

where a hard protective coating was not applied from the time of construction, the tanks in question may be examined at subsequent annual intervals. When considered necessary by the RS surveyor, or where extensive corrosion exists, thickness measurements shall be carried out.

8.4.2.4.2 Where the hard protective coating in ballast tanks is found to be in a GOOD condition, the scope of close-up survey and thickness measurements may be specially considered.

8.4.2.4.3 Based on survey results the RS surveyor makes a record on the necessity of ballast tanks to be examined at annual intervals into the relevant RS reporting documents, the List of Ship's Status taking into account the requirements of 8.4.2.4.1.

8.4.2.5 Scope of overall and close-up surveys.

8.4.2.5.1 An overall survey of all tanks and spaces, excluding fuel oil, lube oil and fresh water tanks, shall be carried out at each special survey.

Note. An overall survey of fuel oil, lube oil and fresh water tanks, shall be carried out in accordance with 2.4.2.2.3, Part II "Survey Schedule and Scope".

8.4.2.5.2 The minimum requirements for close-up surveys at special survey are given in Table 8.4.2.5.2.

Table 8.4.2.5.2

Minimum requirements for close-up survey at hull special surveys of liquefied gas carriers

Special survey No.1 (age ≤ 5)	Special survey No.2 (5 < age ≤ 10)	Special survey No.3 and subsequent (age > 10)
One web frame in a representative ballast tank of the topside, hopper side and double hull side type[1] One transverse bulkhead in a ballast tank[3]	All web frames in a ballast tank, which shall be a double hull side tank or a topside tank. If such tanks are not fitted, another ballast tank shall be selected[1] One web frame in each remaining ballast tank[1] One transverse bulkhead in each ballast tank[2]	All web frames in all ballast tanks[1] All transverse bulkheads in all ballast tanks[2]

[1] Complete transverse web frame, including adjacent structural members.
[2] Transverse bulkhead complete, including girder system and adjacent members, and adjacent longitudinal bulkhead structure.
[3] Transverse bulkhead lower part, including girder system and adjacent structural members.

Notes: 1. Ballast tanks including topside, double hull side, double bottom, hopper side, or any combined arrangement of the aforementioned, and peak tanks, where fitted.
2. For areas in tanks where coatings are found to be in GOOD condition, the scope of close-up surveys may be specially considered by the Register.
3. For ships having independent tanks of type C, with a midship section similar to that of a general cargo ship, the scope of close-up surveys may be specially considered by the Register. Typical midship sections of gas carriers are shown in Fig. 8.4.2.5.2.
4. The surveyor may extend the close-up survey as deemed necessary, taking into account the maintenance of the tank under survey, the condition of the corrosion prevention system and also in the following cases:
in particular, in tanks having structural arrangements or details which have suffered defects in similar tanks, or on similar ships according to available information;
in tanks having structures approved with reduced scantlings.

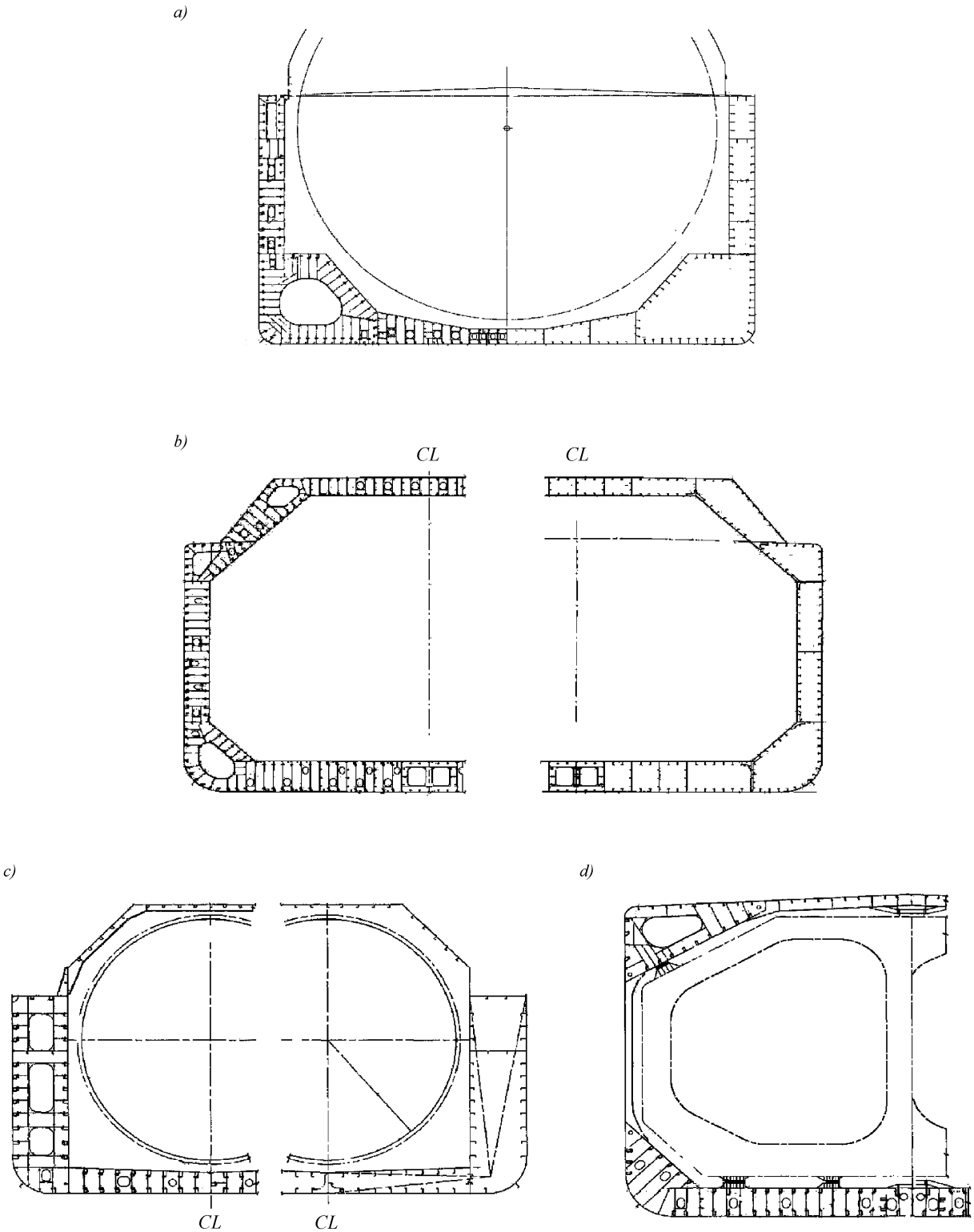

Fig. 8.4.2.5.2
Typical midship sections of liquefied gas carriers:
a, *b* — LNG carrier; *c*, *d* — LPG carrier

8.4.2.5.3 The surveyor may extend the close-up survey as deemed necessary taking into account the maintenance of the tanks under survey, the condition of the corrosion prevention system and where tanks have structural arrangements or details which have suffered defects in similar spaces or on similar ships according to available information.

8.4.2.5.4 For areas in tanks where hard protective coatings are found to be in a GOOD condition, the scope of close-up surveys according to Table 8.4.2.5.2 may be specially considered.

N o t e . Examination of automatic air pipe heads shall be carried out in accordance with the requirements of Table 2.4.2.7.1, Part II "Survey Schedule and Scope".

8.4.2.6 Extent of thickness measurements.

8.4.2.6.1 The minimum requirements for thickness measurements at special survey are given in Table 8.4.2.6.1.

T a b l e 8.4.2.6.1

Minimum requirements for the thickness measurement at hull special survey of liquefied gas carriers

Special survey No. 1 age ≤ 5	Special survey No. 2 5 < age ≤ 10	Special survey No. 3 10 < age ≤ 15	Special survey No. 4 and subsequent age > 15
One section of deck plating for the full beam of the ship within 0,5*L* amidships in way of a ballast tank, if any Measurements, for general assessment and recording of corrosion pattern, of those structural members subject to close-up survey according to Table 8.4.2.5.2 Suspect areas	Within the cargo area: each deck plate one transverse section within 0,5*L* amidships in way of ballast tank, if any Selected wind and water strakes outside the cargo area Measurements, for general assessment and recording of corrosion pattern, of those structural members subject to close-up survey according to Table 8.4.2.5.2 Suspect areas	Within the cargo area: each deck plate two transverse sections[1] all wind and water strakes Selected wind and water strakes outside the cargo area Measurements, for general assessment and recording of corrosion pattern, of those structural members subject to close-up survey according to Table 8.4.2.5.2 Suspect areas	Within the cargo area: each deck plate three transverse sections[1] each bottom plate duct keel plating All wind and water strakes, full length Measurements, for general assessment and recording of corrosion pattern, of those structural members subject to close-up survey according to Table 8.4.2.5.2 Suspect areas

[1] At least one section shall include a ballast tank within 0,5*L* amidships, if any.

N o t e s : 1. For ships having independent tanks of type C, with a midship section similar to that of a general cargo ship, the extent of thickness measurements may be increased to include the tank top plating at the discretion of the surveyor.

2. For areas in spaces where coatings are found to be in GOOD condition, as defined in 1.1, the extent of thickness measurements may be specially considered by the Register.

3. The surveyor may extend the thickness measurements, as deemed necessary. Where substantial corrosion, as defined in 1.1, is found, the extent of thickness measurements shall be increased to the satisfaction of the surveyor.

8.4.2.6.2 The RS surveyor may extend the thickness measurements as deemed necessary. When thickness measurements indicate substantial corrosion, the extent of thickness measurements shall be increased to determine the extent of areas of substantial corrosion. Table 8.2.2.2.4 may be used as guidance for these additional thickness measurements.

8.4.2.6.3 For areas in tanks where hard protective coatings are found to be in a GOOD condition, the extent of thickness measurement according to Table 8.4.2.6.1 may be specially considered.

8.4.2.6.4 Transverse sections shall be chosen where the largest reductions are suspected to occur or are revealed from deck plating measurements.

8.4.2.6.5 Measurements of residual hull member scantlings shall be carried out, if found necessary by the surveyor, on the basis of the results of their examination.

8.4.2.6.6 Non-destructive testing of the main structural members, tank shell and highly stressed parts, including welded connections, shall be carried out, as deemed necessary by the surveyor to supplement cargo tank survey. However, for tanks type C, this does not mean that non-destructive testing can be dispensed with totally.

The following items are considered as highly stressed parts:

cargo tank supports and anti-rolling/anti-pitching devices;

Y-connections between tank shell and longitudinal bulkheads;

web frames or stiffening rings;

dome and sump connections to tank shell;

swash bulkhead boundaries and attachments;

foundations for the pumps, towers, ladders, etc.;

pipe connections.

8.4.2.6.7 For independent tanks of type B the extent of non-destructive testing shall be given in a programme specially prepared for the tank design.

8.4.2.7 Extent of tank testing.

8.4.2.7.1 All boundaries of water ballast tanks and deep tanks used for water ballast within the cargo area shall be pressure tested. For fuel oil tanks, the representative tanks shall be pressure tested.

8.4.2.7.2 The surveyor may extend the tank testing, as deemed necessary.

8.4.2.7.3 Tank testing of fuel oil tanks shall be carried out with a head of liquid to the highest point that liquid will rise under service conditions. Tank testing of fuel oil tanks may be specially considered based on a satisfactory external examination of the tank boundaries, and a confirmation from the master stating that the pressure testing has been carried out according to the requirements with satisfactory results.

8.4.2.7.4 The tightness of all cargo tanks shall be checked by a procedure approved by the Register. Provided that the effectiveness of the ship's gas detection equipment has been confirmed, it is acceptable to utilize this equipment for the tightness test of independent tanks below deck.

For independent tanks of type C the test pressure in the upper part of the tank shall not be less than 1,25 times the maximum allowable relief valve setting (MARVS).

8.4.2.7.5 At the 2nd, 4th, 6th, etc. special surveys all independent tanks of type C shall be hydraulically or hydro-pneumatically tested to 1,25 times the MARVS at the upper edge of the tank and thereafter non-destructively tested in accordance with 8.4.2.6.6 and 8.4.2.6.7 or they shall be subjected to a thorough, planned non-destructive testing. This testing shall be carried out in accordance with the programme specially prepared for the tank design.

If a special programme of non-destructive testing does not exist, the following applies:

the tests shall be aimed at identifying surface cracks in welded connections of the highly stressed parts referred to in 8.4.2.6.6 and 8.4.2.6.7;

at least 10 % of the length of the welded connections in each of the above mentioned areas shall be tested. This testing shall be carried out internally or externally, as applicable.

Insulation shall be removed as necessary for the required non-destructive testing.

8.4.2.7.6 As far as practicable, all hold spaces and hull insulation (if provided), secondary barriers and tank supporting structures shall be visually examined. Secondary barriers of all tanks shall be checked for their effectiveness by means of a pressure/vacuum test, visual examination or another acceptable method.

8.4.2.7.7 For membrane and semi-membrane tank systems, inspections and testing shall be carried out in accordance with the programmes specially prepared according to an approved method for the actual tank system.

8.4.2.7.8 For membrane containment systems a tightness test of the primary and secondary barriers shall be carried out during construction in accordance with the system

designers' procedures and acceptance criteria as approved by the Register. Low differential pressures tests may be used for monitoring the cargo containment system performance, but are not considered an acceptable test for the tightness of the secondary barrier.

8.4.2.7.9 During construction, membrane containment systems with glued secondary barriers shall be checked for their effectiveness by means of a pressure test, having regard to the following:

tightness test shall be carried out before and after initial cool down;

if the designer's threshold values are exceeded, an investigation shall be carried out and additional testing such as thermographic or acoustic emissions testing shall be carried out;

the values recorded shall be used as reference for future assessment of secondary barrier tightness.

For containment systems with welded metallic secondary barriers, a tightness test after initial cool down is not required.

8.4.2.8 Survey of relief valves.

8.4.2.8.1 The pressure relief valves for the cargo tanks shall be opened up for survey, adjusted, operationally tested and sealed. Non-metallic membranes are replaced in accordance with 8.3.2.4.1. The following tolerances apply to MARVS of the relief valves:

MARVS, in bar	tolerance, in %
0 — 1,5	±10
1,5 — 3,0	±6
more than 3,0	±3

8.4.2.8.2 Pressure/vacuum relief valves, rupture discs and other pressure relief devices for interbarrier spaces and hold spaces shall be surveyed, if necessary opened up and tested depending on their design.

8.4.2.9 Survey of electrical bonding.

At hull and cargo tank survey it shall be verified that cargo tanks are electrically bonded to the hull.

8.4.2.10 Survey of piping systems.

8.4.2.10.1 The cargo, liquid nitrogen and process piping systems, including valves, actuators, compensators, etc. shall be opened up for survey. Insulation shall be removed, as deemed necessary, to ascertain the condition of the pipes.

Welded seams at branch connections and bends shall be tested by methods of non-destructive testing for detection of cracks.

If the visual examination raises doubt as to the integrity of the pipelines, a pressure test at 1,25 times the MARVS for the pipeline shall be carried out. After assembly the complete piping systems shall be tested for leaks.

8.4.2.10.2 Cargo pumps, compressors, process pressure vessels, liquid nitrogen tanks, heat exchangers, fans of gas combustion units and other components, including prime movers, used in cargo handling, regasification and methane boil-off burning shall be surveyed in accordance with 2.4.5 of Part II "Survey Schedule and Scope".

8.4.2.10.3 Pressure relief valves shall be operationally tested. A random selection of valves shall be opened up for examination and adjusted.

8.4.2.10.4 Emergency shutdown valves (ESD valves) shall be internally surveyed and pressure tested. Pressure testing at the same pressure as working pressure shall be conducted every 5 years.

8.4.2.11 Survey of the reliquefaction plants.

8.4.2.11.1 The parts of compressor subject to wastage, e.g. cylinders, pistons, connecting rods, glands, bearings, machinery components, such as shafts, rotors, membranes of centrifugal pumps and other components shall be examined.

8.4.2.11.2 Prime movers of all compressors, including components required for prime mover operation, shall be checked.

8.4.2.11.3 All heat exchanger covers and inspection plates shall be removed to examine inner surfaces, tube sheets and tubes. After replacement of tubes or tube sheets the heat exchanges shall be pressure tested or tested for tightness. If only several tubes have been replaced tightness test only is sufficient.

8.4.2.11.4 Equipment ensuring safety (pressure relief valves, rupture discs) shall be checked.

8.4.2.12 Survey of process pressure vessels.

At the survey for renewal of the documents referred to in 11.3 all process pressure vessels shall be pneumatically tested to a pressure 1,1 times the working pressure, unless the survey results require a hydraulic pressure to 1,5 times the working pressure.

8.4.2.13 Survey of equipment for liquid natural gas boil-off burning.

8.4.2.13.1 The gas-conditioning system shall be externally examined.

8.4.2.13.2 A pipe or duct including gas fuel piping shall be leak tested. Ventilation system in the pipe or duct, as well as the equipment for inerting double-walled piping systems, shall be functionally tested.

Heat exchangers shall be internally examined.

8.4.2.14 For the survey requirements for instrumentation and safely systems, refer to 8.3.2.5. In addition to survey of electrical equipment described in 8.3.2.6, safely devices of electrical motors shall be tested.

For ships whose keels are laid, or which are at a similar stage of construction on or after 1 July 2016, at the first occasion of full loading after delivery and after each dry-docking, testing of high-level alarms shall be conducted by raising the cargo liquid level in the cargo tank to the alarm point.

The expression "each dry docking" is considered to be each survey of the outside of the cargo ship's bottom, which is required for renewal of the Cargo Ship Safety Construction Certificate and/or Cargo Ship Safety Certificate.

8.4.2.15 Survey of electrical equipment.

In addition to visual examination and testing described in 8.3.2.6, electrical protection devices of electrical motors shall be tested.

8.4.2.16 Miscellaneous.

8.4.2.16.1 Systems for removal of water or cargo from interbarrier spaces and cargo holds shall be examined and tested, as deemed necessary.

8.4.2.16.2 All gas-tight bulkheads shall be inspected. The effectiveness of gas-tight shaft sealing shall be checked.

8.4.2.16.3 The relevant spare parts shall be checked on board.

8.4.2.16.4 All installations for heating of hull structures shall be checked for proper functioning.

8.4.2.17 Upon satisfactory results of the survey of all parts of the ship in accordance with the requirements of the present Section and 2.4, Part II "Survey Schedule and Scope", the Classification Certificate, International Certificate of Fitness for the Carriage of Liquefied Gases in Bulk, as well as other documents prescribed by the Rules for the Classification and Construction of Sea-Going Ships and international conventions, are issued to the ship.

8.5 PREPARATIONS FOR SURVEY

8.5.1 The provisions regarding preparation to survey are given in 1.3.

8.6 PROCEDURES FOR THICKNESS MEASUREMENTS

8.6.1 The provisions regarding the procedure for thickness measurements of hull structures are described in 1.5.

8.7 SURVEYS BEFORE AND AFTER THE FIRST LOADED VOYAGE

8.7.1 Application.

This paragraph applies to all the ships carrying liquefied natural gases (LNG) in bulk, which have satisfactorily completed gas trials.

8.7.2 Certification.

The following initial certificated shall be "conditionally" issued at delivery subject to satisfactory completion of the first cargo loading and unloading survey requirements below in the presence of a surveyor:

.1 Classification Certificate;

.2 International Certificate of Fitness for the Carriage of Liquefied Gases in Bulk.

N o t e . The Classification Certificate shall be issued for a period of 60 months. In the List of Survey's Status (form 6.3.51-1), Section "Conditions ", the following entry shall be made: "Not later than DD.MM.YYYY, the overall performance of the cargo containment system shall be verified for compliance with the design parameters during the first full loading and discharging of the cargo, in accordance with the survey procedure, the IGC Code requirements concerning the conduct of survey and the MA requirements. Records of the performance of the components and equipment essential to verify the design parameters, shall be maintained and be available to the attending surveyor".

The period of time for fulfilling the requirements shall be sufficient to make the first loaded voyage, but shall not exceed 5 months.

The International Certificate of Fitness for the Carriage of Liquefied Gases in Bulk (hereinafter referred to as "the International Certificate") shall be issued for a period of time sufficient to make the first loaded voyage, but shall not exceed 5 months. Under the title of the International Certificate, the following entry shall be made: "CONDITIONAL"/"SHORT-TERM", the conditions shall be stated in the International Certificate or the reference to the Ship's Survey Statement (form 6.1.03, supplemented by the Survey checklist as per form 6.1.01) shall be made therein specifying the following conditions:

the overall performance of the cargo containment system shall be verified for compliance with the design parameters during the first full loading and discharging of the cargo in accordance with the survey procedure, the IGC Code requirements concerning the conduct of survey, and the MA requirements. Records of the performance of the components and equipment essential to verify the design parameters shall be maintained and be available to the attending surveyor;

the cargo containment system shall be inspected for cold spots during, or immediately following, the first loaded voyage. Inspection of the integrity of thermal insulation surfaces that cannot be visually checked shall be carried out in accordance with recognized standards. The written statement shall be obtained from the master that the cold spot examination of the hull and external insulation of the cargo containment system was carried out by the crew during the first loaded voyage and found satisfactory. Report of findings shall be available to the attending surveyor.

8.7.3 Survey requirements.

8.7.3.1 First loading (considered to be full loading):

.1 priority to be given to latter stages of loading (approximately last 6 h);

.2 review cargo logs and alarm reports;

.3 witness satisfactory operation of the following:

gas detection system;

cargo control and monitoring systems such as level gauging equipment, temperature sensors, pressure gauges, cargo pumps and compressors, proper control of cargo heat exchangers, if operating, etc;

nitrogen generating plant or inert gas generator, if operating;

nitrogen pressure control system for insulation, interbarrier, and annular spaces, if operating;

cofferdam heating system, if operating;

reliquefaction plant, if fitted;

equipment fitted for the burning of cargo vapors such as boilers, engines, gas combustion units, etc., if operating;

.4 examination of on-deck cargo piping systems including expansion and supporting arrangements;

.5 witness topping off process for cargo tanks including high level alarms activated during normal loading;

.6 advise master to carry out cold spot examination of the hull and external insulation during transit voyage to unloading port;

.7 witness emergency shutdown system testing prior to commencement of unloading.

8.7.3.2 First unloading:

.1 priority to be given to the commencement of unloading (approximately first 4 — 6 h);

.2 witness emergency shutdown system testing prior to commencement of unloading;

.3 review cargo logs and alarm reports;

.4 witness satisfactory operation of the following:

gas detection system;

cargo control and monitoring systems such as level gauging equipment, temperature sensors, pressure gauges, cargo pumps and compressors, proper control of cargo heat exchangers, if operating, etc;

nitrogen generating plant or inert gas generator, if operating;

nitrogen pressure control system for insulation, interbarrier, and annular spaces, as applicable;

on membrane vessels, verify that the readings of the cofferdam and inner hull temperature sensors are not below the allowable temperature for the selected grade of steel. Review previous readings;

cofferdam heating system, if operating;

reliquefaction plant and review of records from previous voyage;

equipment fitted for the burning of cargo vapors such as boilers, engines, gas combustion units, etc., if operating;

.5 examination of on-deck cargo piping systems including expansion and supporting arrangements;

.6 obtain written statement from the master that the cold spot examination was carried out during the transit voyage and found satisfactory. Where possible, the surveyor shall examine selected spaces.

9 SURVEYS OF PASSENGER SHIPS

9.1 GENERAL

9.1.1 When passenger ships are surveyed the applicable requirements of Part I "General Provisions", Part II "Survey Schedule and Scope" and of this Section shall be met.

9.1.2 Passenger ships are subject to annual, intermediate and special surveys the integral part of which is a survey of the underwater hull, keels, sea chests with gratings, active stabilizers (if provided), rudders and propellers.

During survey special attention shall be given to the following items (refer to IACS Recommendation No. 111):

longitudinal bulkheads (in particular, defects such as cracks/fractures/ruptures may be observed in way of discontinuities/openings, particularly at the upper and lower zones of the bulkheads;

examples of discontinuities include fire-screen door openings, cable and pipe penetrations, elevator access arrangements and ventilation duct openings, etc.);

downflooding ducts fitted to improve stability in the damaged condition;

ventilation ducts and air pipes (in particular, presence of wear);

grey and black water tanks (sanitary/domestic waste water and sewage holding tanks), including biological treatment system tanks (in particular, presence of wear);

stabiliser housings (in particular, presence of wear);

structures adjacent to refrigerated rooms (in particular, presence of wear);

permanent ballast or fixed ballast (solid (non-liquid), liquid, corrosive or non-corrosive type).

9.1.3 At intervals not exceeding 5 years, all passenger ships shall be verified for fulfillment of the requirements for periodical light-weight checks and inclining tests to be performed in accordance with regulation II-1/22.3 of the 1988 amendments to SOLAS 74/78 or regulation II-1/5.5 of the 2006 amendments to SOLAS 74/78, and for ships not subject to SOLAS 74/78, as amended, in accordance with 1.5.1 of Part IV "Stability" of the Rules for the Classification and Construction of Sea-Going Ships.

9.2 GENERAL REQUIREMENTS FOR SURVEY

9.2.1 Prior to survey of a passenger ship the following ship records shall be verified by the surveyor for being on board:

drawings of structural fire protection;
plan of emergency escape routes;
fire-fighting system diagrams;
Stability Booklet for the master;
damage stability calculations;
ship loading manual.

9.2.2 At surveys of passenger ships the provisions specified in 9.1.2, 9.3 — 9.5 shall be complied with in addition to the applicable provisions of Part II "Survey Schedule and Scope".

9.3 ANNUAL SURVEY

9.3.1 At annual survey particular attention shall be given to the condition of watertight closures in ship subdivision bulkheads, their drives, alarms at ship control stations, closing appliances of openings in shell plating, securing devices, door drives, watertight door arrangement plans for being in the wheelhouse.

9.3.2 On passenger ro-ro ships, in addition to the requirements of 2.2.3.5 of Part II "Survey Schedule and Scope" and to confirm compliance of closings appliances for openings in hull with the RS requirements the surveys specified in Section 17 of this Part shall be carried out.

Any defects identified in the condition of closings appliances and deviating from permissible parameters determined by the RS rules shall be eliminated prior to the commencing of the ship's operation.

Motor vehicle securing appliances shall be checked in accordance with 2.2.3.6 of Part II "Survey Schedule and Scope".

9.3.3 The condition of fire doors in the fire bulkheads bounding main vertical zones, their closing and securing appliances, door position indicators at the ship control station, fire door arrangement plans for being at the ship control station shall be checked.

9.3.4 Availability of fire-fighting means, portable fire extinguishers, fireman's outfit sets, etc. shall be checked.

9.3.5 Correspondance shall be checked between the number of passengers allowed for carriage and actual number carried.

9.3.6 Indication of passenger escape routes by marking or low illumination shall be visually inspected.

9.4 SPECIAL SURVEY

9.4.1 At special survey, in addition to the requirements specified in 2.4 of Part II "Survey Schedule and Scope" and 9.3 of this Part, watertight doors in watertight bulkheads shall be operationally tested and, where necessary, shall be tested for tightness;

closing appliances of doors in the outer contour of the ship shall be checked and tested for tightness;

devices to secure lifting sections to the hull and closing-down appliances with drives shall be submitted in a disassembled condition, if required by the surveyor.

9.4.2 All signalling systems of closing the doors in the hull outer contour, in watertight and fire bulkheads with examination of boards and cables shall be checked.

9.4.3 In addition to the requirements of 2.4.3.2, Part II "Survey Schedule and Scope" and to confirm compliance of closings appliances for openings in hull with the RS requirements the surveys specified in Section 17 of this Part shall be carried out.

Door shall be tested for tightness in accordance with the requirements of 2.4.3.2.5, Part II "Survey Schedule and Scope" and Section 17 of this Part.

Motor vehicle securing appliances shall be checked in accordance with 2.4.3.10 of Part II "Survey Schedule and Scope".

Any defects identified in the condition of bow, side and stern doors shall be eliminated prior to the commencing of the ship's operation.

9.5 DRAWING UP SURVEY RESULTS

9.5.1 Upon satisfactory completion of the surveys, the documents in accordance with Section 6, Part I "General Provisions" of the Guidelines shall be drawn up/issued to passenger ships.

10 SURVEYS OF SPECIAL PURPOSE SHIPS

10.1 GENERAL

10.1.1 Special purpose ships shall comply with the requirements of the Rules for the Classification and Construction of Sea-Going Ships because they have been developed with regard to requirements of the Code of Safety for Special Purpose Ships (SPS Code), as amended (refer to 2.1.6 of Part III "Survey of Ships in Compliance with International Conventions, Codes, Resolutions and Rules for the Equipment of Sea-Going Ships" of the Guidelines.

10.2 SURVEY

10.2.1 At survey of special purpose ships the requirements set forth in Part I "General Provisions", as well as applicable requirements of Part II "Survey Schedule and Scope" and Part III "Additional Surveys of Ships Depending on their Purpose and Hull Material" of these Rules shall be fully complied with. Instructions on survey of special purpose ships for compliance with the provisions of the SPS Code are specified in 2.1.6 of Part III "Survey of Ships in Compliance with International Conventions, Codes, Resolutions and Rules for the Equipment of Sea-Going Ships" of the Guidelines.

11 SURVEYS OF SHIPS CARRYING DANGEROUS GOODS IN PACKAGED FORM

11.1 GENERAL

11.1.1 To recognize that the ship is complying with the requirements for the carriage of dangerous goods in packaged form the ship shall be surveyed by the Register according to 2.1.5, Part III "Survey of Ships in Compliance with International Conventions, Codes, Resolutions and Rules for the Equipment of Sea-Going Ships" of the Guidelines.

11.1.2 For assignment/retainment of distinguishing mark **DG (pack)** in the class notation, the ship shall be surveyed by the Register for compliance with the requirements of Section 7, Part VI "Fire Protection" of the Rules for the Classification and Construction of Sea-Going Ships and of 2.1.5, Part III "Survey of Ships in Compliance with International Conventions, Codes, Resolutions and Rules for the Equipment of Sea-Going Ships" of the Guidelines.

11.1.3 Surveyors are advised to be guided by the provisions of Annex 25 to the Guidelines as reference material during the survey.

11.2 SURVEY

11.2.1 Survey of ships for determination of their capability to carry dangerous goods shall be based on an official application of the shipowner or his representative.

11.2.2 At survey the surveyor shall verify that the ship design, including fire insulation of the engine room bulkheads, fire-fighting system, fire detection and prevention, ventilation and bilge systems, electrical equipment on deck and in holds, air sampling and temperature measuring devices, fire-fighting equipment and fireman's outfit comply with the requirements specified in 2.1.5, Part III "Survey of Ships in Compliance with International Conventions, Codes, Resolutions and Rules for the Equipment of SeaGoing Ships" of the Guidelines.

11.2.3 Prior to survey the following shall be submitted to the surveyor:

drawings of structural fire protection;

diagrams of fire-fighting systems;

diagrams of fire detection and prevention;

diagrams of cargo space ventilation system;

diagrams of cargo hold bilge systems;

schemes of electric cable penetration through hold and design enclosure of electrical equipment in holds and in the area of holds on deck where cargo can be carried.

11.3 REGISTER DOCUMENTS

11.3.1 Upon satisfactory results of the survey, when requested by the shipowner, the Register draws up and issues the documents in accordance with 2.1.5, Part III "Survey of Ships in Compliance with International Conventions, Codes, Resolutions and Rules for the Equipment of Sea-Going Ships" of the Guidelines for ships engaged on international voyages, or the documents referred to in 11.3.2 for ships not engaged on international voyages.

11.3.2 For ships not engaged on international voyages, upon results of the survey the Register issues:

Report on Survey of the Ship (form 6.3.10) for compliance of the ship construction and equipment with the requirements of Section 7, Part VI "Fire Protection" of the Rules for the Classification and Construction of Sea-Going Ships for the carriage of dangerous goods of classes 1 — 5, 6.1, 8 and 9, and additionally, for ships flying the RF flag — with the requirements of the national Dangerous Goods Rules (DG Rules — national rules for safe carriage of dangerous goods) for the carriage of dangerous goods of classes 6.2 and 7.

11.3.1.3 For ships whose keel was laid down or who were at a similar stage of construction before 1 September 1984, not complying with the requirements of regulation 54, Chapter II-2 of the 1981 amendments to SOLAS 74/78, as well as 2.8, Part VI "Fire Protection" of the Rules for the Classification and Construction of Sea-Going Ships, the Certificate as per form 2.1.22 may be issued for classes 7 and 9, as well as the Report on Survey of the Ship (form 6.3.10) for issue of the Certificate as per form 2.1.22 — for classes 1 to 9.

12 SURVEYS OF SHIPS INTENDED FOR CARRIAGE OR CARRYING SOLID BULK CARGOES POSSESSING CHEMICAL HAZARDS AND/OR MATERIALS HAZARDOUS ONLY IN BULK (MHB)

12.1 GENERAL

12.1.1 To recognize that the ship is complying with the requirements for the carriage solid bulk cargoes possessing chemical hazards and/or materials hazardous only in bulk (MHB) the ship shall be surveyed by the Register according to 2.1.5 and 2.1.12, Part III "Survey of Ships in Compliance with International Conventions, Codes, Resolutions and Rules for the Equipment of Sea-Going Ships" of the Guidelines.

12.1.2 For assignment/retainment of distinguishing mark **DG (bulk)** in the class notation, the ship shall be surveyed by the Register for compliance with the requirements of Section 7, Part VI "Fire Protection" of the Rules for the Classification and Construction of Sea-Going Ships and of 2.1.5 and 2.1.12, Part III "Survey of Ships in Compliance with International Conventions, Codes, Resolutions and Rules for the Equipment of Sea-Going Ships" of the Guidelines.

12.1.3 Surveyors are advised to be guided by the provisions of Annex 25 to the Guidelines as reference material during the survey.

12.2 REGISTER DOCUMENTS

12.2.1 In case of satisfactory results of the survey, the Register, as requested by the shipowner, draws up and issues the documents specified in 2.1.5 and 2.1.12, Part III "Survey of Ships in Compliance with International Conventions, Codes, Resolutions and Rules for the Equipment of Sea-Going Ships" of the Guidelines for ships engaged on international voyages, or the documents referred to in 12.2.2 for ships not engaged on international voyages.

12.2.2 For ships not engaged on international voyages, upon results of the survey the Register issues:

Report on Survey of the Ship (form 6.3.10) for compliance of the ship construction and equipment with the requirements of Section 7, Part VI "Fire Protection" of the Rules for the Classification and Construction of Sea-Going Ships for the carriage of dangerous goods in solid form in bulk of class and UN No. or "MHB", and additionally, for ships flying the RF flag — with the requirements of the national Bulk Cargoes Rules (BC Rules — national rules for safe carriage of cargoes in bulk).

13 SURVEYS OF FLOATING DOCKS, BERTH-CONNECTED SHIPS AND BARGES

13.1 GENERAL

13.1.1 At surveys of floating docks and berth-connected ships the requirements of Part I "General Provisions" and of 2.2 and 2.4 of Part II "Survey Schedule and Scope" shall be met.

13.1.2 At surveys of barges the requirements of Part I "General Provisions" and of 2.2 — 2.4 of Part II "Survey Schedule and Scope" shall be met.

13.2 SURVEY OF FLOATING DOCK HULLS

13.2.1 At survey of metal floating dock hulls shall be taken into account that the following structures are primarily subject to intensive corrosion:

bottom areas of wing walls between pontoons;

bottom areas of wing walls in way of openings in the compartments flooded with water;

lower parts of struts and braces, and brackets used for their attachment to the pontoons;

structural members in the area of temperature changes (in way of boiler rooms and southern part of wing walls);

pontoon deck plating and underdeck members;

pontoon and wing wall sides in way of their abutting on flange connections.

Where substantial corrosion of structural members in the supposed suspect areas is found, measurements of residual scantlings shall be made as deemed necessary by the surveyor. For floating docks survey of the outside of the ship's bottom shall be carried out not later than within 15 years after construction and then after 10 years. In such case, the data of underwater television, diver's examinations, flaw detection from inside, as well as the calculations of competent organizations carried out in accordance with the procedures specified in the Rules for Construction may be used.

13.2.2 During survey of reinforced concrete hulls of floating docks, berth-connected ships and barges, the technical supervision of the hull structures shall be carried out in compliance with the requirements of Section 14.

13.3 Technical supervision of cargo handling gear shall be carried out in compliance with the requirements of the Rules for the Cargo Handling Gear of Sea-Going Ships.

13.4 When berth-connected ships are surveyed particular attention shall be given to securing of the ship to shore facilities and anchor arrangement, which shall ensure an adequate anchorage. The hull shall be surveyed in dock within the time specified in 13.2.

14 HULL SURVEYS OF CONCRETE SHIPS

14.1 GENERAL

14.1.1 During survey of the hulls of reinforced concrete ships, the general requirements of Part I "General Provisions", 2.2 and 2.4 of Part II "Survey Schedule and Scope" shall be met taking into account the provisions of this Section.

14.2 SURVEY

14.2.1 During any survey, the examination of previously installed, as temporary repair, cement boxes or reinforced cement covering located in the underwater part shall be carried out, as well as at the discretion of the RS surveyor, the protective plating and linings of internal spaces at sides, aft bulkheads and decks shall be opened up in case of detection of holes, cracks in slabs of plating, water and fuel penetration through reinforced concrete structures are revealed. The areas which in the course of operation are likely to be subject to impacts (sides, aft bulkheads, etc.), areas structurally intended for mooring of ships/offshore installations or working with them in the course of operation, as well as areas affected by heating and media harmful to concrete and reinforcing rods (alkalis, brines, petroleum products) shall be subject to close-up survey.

As applied to reinforced concrete hull structures, symbol "M" showing the nature of survey in Table 2.1.1-1 of Part II "Survey Schedule and Scope" means the measurements of crack width, crack depth, corrosive wear of reinforcing rods in case of its exposure or after concrete coating opening-up, identification of concrete blowout and cavity areas.

14.2.2 Survey of the outside of the bottom of reinforced concrete hulls of floating docks (bottom survey) shall be carried out at intervals established in accordance with 2.5.5.5 of Part II "Survey Schedule and Scope". In such case, the data of underwater television, diver's examinations, flaw detection from inside, as well as the calculations of organizations carried out in accordance with the procedures specified in the Rules for the Construction of Hulls of Sea-Going Ships and Floating Facilities Using Reinforced Concrete may be used.

14.2.3 Repair.

Provisions related to the repair of hulls and structures of reinforced concrete, steel concrete in complex or composite versions are specified in Section 5, Part I "General Provisions" and 14.3 of this Section.

14.3 TECHNICAL ASSESSMENT OF CONDITION OF REINFORCED CONCRETE HULL STRUCTURES

14.3.1 Assessment of technical condition of reinforced concrete hull structures of floating docks, berth-connected ships and barges shall be carried out in compliance with the requirements given below.

These requirements are fully applicable for assessment of the hull technical condition during annual, intermediate, special, initial and other types of surveys.

Thickness measurements of hull steel elements, piping, ship devices and other steel structures shall be carried out in accordance with the requirements of Annex 2 of these Rules.

The hull shall be prepared for flaw detection by the shipowner: loose or peeling concrete shall be removed, corrosion products shall be removed, scaffolding and other means of access to structures shall be prepared, tanks shall be gas free and clean-free from sediments (refer also to 4.11 of Part I "General Provisions" and 1.3.2 — 1.3.6 of Part III "Additional Surveys of Ships Depending on their Purpose and Hull Material").

14.3.2 Steel structures.

Steel plates, framing and their welds if used in hull structures of steel concrete hulls in complex and composite versions shall meet the applicable requirements of Annex 2 to these Rules.

14.3.3 Technical condition of concrete, reinforced concrete structures shall be determined on the basis of results of visual examination, concrete defects measurements, reinforcing rods wear, tightness tests. Main defects of hull reinforced concrete structures to be revealed during survey are:

holes in slabs of plating;

flaking, indents and chipping of the concrete protective layer;

cracks in slabs of plating and framing;

corrosive wear of reinforcing rods;

water and fuel penetration through the plating.

14.3.4 Reference information on the assessment of technical condition of concrete, reinforced concrete hull elements and their reinforcement is given in the internal normative documents intended for the use of RS surveyors.

14.3.5 Damages to the hull structures which affect or, in the opinion of the RS surveyor, may affect the ship structural integrity, structural strength, watertight and/or weathertight integrity, shall be promptly and thoroughly repaired.

Where the damage found in areas specified in 14.2.1 is of local or isolated nature which does not affect the ship's structural integrity, the RS surveyor may agree upon the performance of temporary repair to restore watertight or weather integrity of hull and impose the condition of class to carry out thorough repair within established time limit in accordance with Annex 17 to the Guidelines.

For a port of submission where adequate repair facilities are not available, at the shipowner's written request consideration may be given by the Register for a ship to proceed directly to port, where the required repair facilities are available. If necessary, this may require temporary repairs for the intended voyage.

When choosing the repair methods and design, the provisions of internal normative documents on repair intended for the use of RS surveyors are recommended to be met.

15 HULL SURVEYS OF GLASS-REINFORCED PLASTIC SHIPS

15.1 GENERAL

15.1.1 During hull surveys of glass-reinforced plastic ships, the requirements of Part I "General Provisions" and Part II "Survey Schedule and Scope" in respect of examinations of structures depending on the type of survey shall be met. The assessment of technical condition of a glass-reinforced plastic hull shall be carried out on the basis of results of thorough visual examination to reveal the following:

plating lamellar tear and leaks in joints;

matting-in connections detachment from the plating and frame members;

cracks on plating and framing. The revealed defects which affect the strength characteristics and tightness of the hull shall be completely and promptly eliminated. The possibility to retain the ship's class for a ship with such defects as structural delamination (lamellar tear), surface cracks, scuffing, scratches, notching, elusion and leaching of plastic binder or other local defects not affecting structural integrity shall in each case be reviewed by the Register. The shipowner shall submit necessary mathematical substantiation.

15.1.2 In case of transfer of a ship into the RS class as a non-classed ship or from ACS — non-IACS member, the hull structures shall be checked for compliance with the requirements of Part XVI "Structure and Strength of Fiber-Reinforced Plastic Ships" of the Rules for the Classification and Construction of Sea-Going Ships, before the survey.

16 SURVEYS OF SHIPS CARRYING PACKAGED IRRADIATED NUCLEAR FUEL, PLUTONIUM AND HIGH-LEVEL RADIOACTIVE WASTES

16.1 GENERAL

16.1.1 This Section sets the requirements for additional items of technical supervision, which are specific to the carriage of packaged irradiated nuclear fuel, plutonium and high level radioactive wastes (INF cargoes).

16.1.2 The requirements of the Rules apply to all ships irrespective of the date of construction and ship's dimensions, including cargo ships below 500 gross tonnage, carrying INF cargoes.

16.1.3 The specified requirements are applied in addition to the requirements of classification surveys, which are applicable to other items of technical supervision on board the ship.

16.1.4 In addition to the present requirements, the ship shall comply with the provisions of the National Regulations for Marine Carriage of Dangerous Cargoes and of the Rules for the Classification and Construction of Sea-Going Ships.

16.1.5 Ships engaged in international voyages shall also meet the requirements of the International Code for the Safe Carriage of Packaged Irradiated Nuclear Fuel, Plutonium and High-Level Radioactive Wastes on Board Ships (INF Code) and the IMDG Code.

16.2 SURVEY

16.2.1 The initial survey of a ship for determination of her capability to carry INF cargoes, shall be carried out at the official request of the shipowner. It includes the survey of ship's structure, equipment and outfit, materials, structural fire protection and fire extinguishing equipment and systems, temperature control system in cargo spaces, electrical equipment, radiological protection, means of cargo stowage to determine the ship compliance with the requirements of these Rules.

Prior to the survey, the following shall be submitted to the surveyor:

approved ship's emergency plan;

Damage Stability Booklet approved by the Register;

drawings of structural fire protection;

fire extinguishing plans;

diagrams of cargo space ventilation;

cargo hold drainage plans.

16.2.2 Annual surveys shall be carried out to confirm the ship compliance with the requirements of 16.2.1.

16.3 REGISTER DOCUMENTS

16.3.1 Upon satisfactory results of the survey, the Register issues the documents specified in 11.3.

16.3.2 For ships engaged in international voyages the International Certificate of Fitness of the Ship for the Carriage of INF Cargoes (form 2.1.5) shall be issued in addition to the documents specified in 16.3.1. The validity of this Certificate shall not exceed 5 years.

17 SURVEY REQUIREMENTS TO BOW, SIDE, STERN DOORS, RAMPS AND INNER DOORS OF RO-RO SHIPS

17.1 GENERAL

17.1.1 These provisions are given in addition to the requirements of class surveys of the ship's hull, machinery and arrangements as prescribed by Part II "Survey Schedule and Scope", and apply to all ro-ro ships and ro-ro passenger ships, which definitions are given in 1.1.

17.1.2 Additional information regarding survey of bow, side, stern doors, ramps and inner doors of ro- ro ships is given in Annex 34 to the Guidelines.

17.2 SPECIAL SURVEY

17.2.1 The special survey shall include, in addition to the requirements of the annual survey as required in 17.3, examination, tests and checks of sufficient extent to verify that the bow, side, stern doors, ramps and inner doors are in satisfactory condition and considered able to remain in compliance with applicable requirements, subject to proper maintenance and operation in accordance with the Manual on Operation and Repair of Doors in Shell Plating or manufacturer's recommendations and the periodical surveys being carried out at the due dates for the five year period until the next special survey.

17.2.2 The examinations of the doors shall be supplemented by thickness measurements and testing to verify compliance with applicable requirements so that the structural and weathertight integrity remain effective. The aim of the examination is to identify corrosion, significant deformation, fractures, damages or other structural deterioration, that may be present.

17.2.3 Scope of survey of bow, side, stern doors, ramps and inner doors.

17.2.3.1 Overall and close-up surveys of the items as indicated in 17.3.4.1.

17.2.3.2 Non-destructive testing and thickness measurements shall be carried out on securing, supporting and locking devices, including welding, to the extent considered necessary by the surveyor. Whenever a crack is found, an examination with NDT shall be carried out in the surrounding area and for similar items as considered necessary by the surveyor.

17.2.3.3 The maximum permissible thickness diminution of hinging arms, securing, supporting and locking devices shall be determined in accordance with Annex 2 to these Rules as for primary ships structures. Actual wear shall not to be more than 15 % of the as-built thickness or the maximum corrosion allowance, determined in accordance with the Rules, whichever is less. Certain designs may be subject to individual surveyor's special consideration.

17.2.3.4 Checking the effectiveness of sealing arrangements by hose testing or equivalent shall be carried out.

17.2.3.5 Clearances of hinges, bearings and thrust bearings, securing, supporting and locking devices shall be taken. Unless otherwise specified in the Manual on Operation and Repair of Doors in Shell Plating or by manufacturer's recommendation, the measurement of clearances on ro-ro cargo ships may, at the RS surveyor's discretion, be omitted or limited to representative bearings where dismantling is needed in order to measure the clearances.

If dismantling is carried out, a visual examination of hinge pins and bearings together with NDT of the hinge pin shall be carried out.

17.2.3.6 The non-return valves of the drainage system shall be dismantled and examined.

17.3 ANNUAL SURVEY

17.3.1 The survey shall consist of an examination to verify, as far as is practicable, that the bow, side, stern doors, ramps and inner doors are maintained in a satisfactory condition.

17.3.2 Confirmation shall be obtained that no unapproved changes have been made to the bow, side, stern doors, ramps and inner doors since the last survey.

17.3.3 It shall be verified that the following documents are available on board the ship:

.1 approved copy of the Manual on Operation and Repair of Doors in Shell Plating and any possible modifications of closing and securing devices included;

.2 documented operating procedures for closing and securing doors posted at appropriate places;

.3 registration book of maintenance and repairs of doors in shell plating. At that it shall be confirmed that inspections in the book are registered properly by the crew.

17.3.4 The scope of survey.

17.3.4.1 Overall examination.

17.3.4.1.1 The overall examination shall be performed of the following:

structural arrangement of doors including plating, secondary stiffeners, primary structure, hinging arms and welding;

shell structure surrounding the opening of the doors and the securing, supporting and locking devices including shell plating, secondary stiffeners, primary structure, and welding;

hinges and bearings, thrust bearings;

hull and door side supports for securing, supporting and locking devices.

17.3.4.2 Close-up survey.

17.3.4.2.1 As minimum the following items of securing, supporting and locking devices shall be subject to close-up survey:

cylinder securing pins, supporting brackets, back-up brackets (where fitted) and their welded connections;

hinge pins, supporting brackets, back-up brackets (where fitted) and their welded connections;

locking hooks, securing pins, supporting brackets, back-up brackets (where fitted) and their welded connections;

locking pins, supporting brackets, back-up brackets (where fitted) and their welded connections;

locating and stopper devices and their welded connections.

Whenever a crack is found, an examination with NDT shall be carried out in the surrounding area and for similar items as considered necessary by the surveyor.

17.3.4.3 Measurement of clearances.

17.3.4.3.1 Clearances of hinges, bearings and thrust bearings shall be taken, where no dismantling is required. Where the function test is not satisfactory, dismantling may be required to measure the clearances. If dismantling is carried out, a visual examination of hinge pins and bearings together with NDT of the hinge pin shall be carried out. Clearances of securing, supporting and locking devices shall be measured, where indicated in the Manual on Operation and Repair of Doors in Shell Plating.

17.3.4.4 Sealing arrangement.

17.3.4.4.1 An examination of packing material/rubber gaskets and retaining bars or channels, including welding shall be carried out.

17.3.4.5 Drainage arrangement.

17.3.4.5.1 An examination of drainage arrangement, including bilge wells and drain pipes shall be carried out.

17.3.4.5.2 A test of the bilge system between the inner and outer doors shall be carried out.

17.3.4.6 Function test of doors.

17.3.4.6.1 Checking of the satisfactory operation of the bow, inner, side shell and stern doors during a complete opening and closing operation shall be made, as applicable, including:

proper working of the hinging arms and hinges;

proper engagement of the thrust bearings;

device for locking the door in the open position;

securing, supporting and locking devices;

proper sequence of the interlock system for the opening/closing system and the securing and locking devices;

mechanical lock of the securing devices;

proper locking of hydraulic securing devices in the event of a loss of the hydraulic fluid,

according to the procedure provided by the Manual on Operation and Repair of Doors in Shell Plating;

correct indication of open/closed position of doors and securing/locking devices at navigation bridge and other control stations;

examination of electrical equipment for opening, closing and securing the doors.

17.3.4.6.2 The following shall be checked including:

isolation of the hydraulic securing/locking devices from other hydraulic systems;

confirmation that operating panels are inaccessible to unauthorized persons;

verification that a notice plate giving instructions to the effect that all securing devices are to be closed and locked before leaving harbor is placed at each operating panel and supplemented by warning indicator lights.

17.3.4.7 Function test of the indicator system (if any).

17.3.4.7.1 Checking of the satisfactory operation of the indication and audible alarm on the navigation bridge panel, according to the selected function "harbor/sea voyage" and on the operating panel, shall be carried out, including:

good working order of sensors and protection from water, ice formation and mechanical damage;

lamp test function on both panels.

17.3.4.7.2 The following shall be checked including:

verification that it is not possible to turn off the indicator light on both panels;

verification of fail safe performance is provided according to the procedure provided by the Manual on Operation and Repair of Doors in Shell Plating;

confirmation that power supply for indicator system is supplied by the emergency source or other secure power supply and independent of the power supply for operating the doors.

17.3.4.8 Test of water leakage detection system.

17.3.4.8.1 The water leakage detection system shall be tested including proper audible alarm on the navigation bridge panel and on the engine control room panel, according to the procedure provided by the Manual on Operation and Repair of Doors in Shell Plating.

17.3.4.9 Test of television surveillance system.

17.3.4.9.1 The television surveillance system shall be tested including proper indication on the navigation bridge monitor and on the engine control room monitor.

17.3.4.10 Tightness test.

17.3.4.10.1 A hose test or equivalent shall be carried out. If the visual examination and function test have shown satisfactory results, the tightness test of shell doors on ro-ro cargo ships need not be carried out unless considered necessary by the attending surveyor.

17.3.4.11 NDT and thickness measurements.

17.3.4.11.1 When considered necessary by the surveyor, NDT and thickness measurements may be required after visual examination and function test.

17.4 REPORTING

17.4.1 Upon the results of the survey the relevant items of Survey checklist (form 6.1.01) shall be filled-in.

18 SURVEYS OF FISHING VESSELS

18.1.1 At surveys of fishing vessels the requirements of 2.2, 2.3 and 2.4 of Part II "Survey Schedule and Scope" and of this Section shall be met.

18.1.2 For fishing vessels over 30 m length it is necessary to verify compliance with the requirements for light-weight checks or inclining tests during the past 10 years, as well as fulfillment of requirements for inclining tests on fishing vessels of 30 m in length and less during the last 15 years. Where such data are not available one shall require the inclining test or light-weight check of the ship to be performed in accordance with 1.5 of Part IV "Stability" of the Rules for the Classification and Construction of Sea-Going Ships. In accordance with 1.5.5 of Part IV "Stability" of the Rules for the Classification and Construction of Sea-Going Ships, light-weight check of fishing vessels over 30 m length shall be carried out after 10 years in service from the date of build or last inclining test.

If upon results of the light-weight check, the deviations from the lightship displacement and longitudinal centre of gravity do not exceed the values specified in 1.5.5 of Part IV "Stability" of the Rules for the Classification and Construction of Sea-Going Ships, then the fishing vessel shall not be inclined. Next light-weight check shall be performed at intervals not exceeding five years.

19 HULL, EQUIPMENT AND MACHINERY SURVEYS OF MODU AND FOP

19.1 GENERAL

19.1.1 Application.

19.1.1.1 The requirements of this Section are applied by RS during technical supervision of all RS-classed MODU and FOP in service, which are designed for drilling operations and for the exploration and/or extraction of natural resources under the seabed, during MODU/FOP classification in operation. During the initial classification of MODU and FOP under construction, the requirements of Section 3, Part I "Classification" of the MODU/FOP Rules shall be complied with.

19.1.1.2 For drilling ships (surface type units), the requirements of this Section replace classification requirements of Part II "Survey Schedule and Scope" of these Rules, unless expressly provided otherwise.

19.1.1.3 The RS technical supervision on fulfillment of the requirements ensuring technical safety of MODU operation, safety of life at sea and prevention of marine environment pollution by organizations and persons carrying out the operation, repair or conversion of MODU is based on the requirements of the MODU/FOP Rules and these Rules.

19.1.1.4 Drilling equipment is not subject to the Register technical supervision (the list of items under supervision of competent bodies is given in Table 19.1.1.4), unless otherwise stated in the relevant sections of these Rules. However, where their technical characteristics connected with ensuring general safety of MODU/FOP and safety of life at sea are altered, the MODU/FOP owner shall inform the Register about that and submit the appropriate conclusions of the competent bodies thereto.

In accordance with 1.1.3, Part I "Classification" of the MODU/FOP Rules, the Register may carry out technical supervision of drilling and process equipment in service if, upon the customer's request, the requirements of the Rules for the Oil-and-Gas Equipment of Floating Offshore Oil-and-Gas Production Units, Mobile Offshore Drilling Units and Fixed Offshore Platforms (OGE Rules) are applied to drilling and process equipment, and the relevant descriptive notations are added to the character of classification in accordance with 6.3.1, Part I "General Regulations for Technical Supervision" of the OGE Rules. In this case, the oil-and-gas equipment installed on FPU, MODU, or FOP specified in Table 7.1, Part I "General Regulations for Technical Supervision" of the OGE Rules shall be included in the items subject to technical supervision by the Register, to which the requirements of the OGE Rules apply.

Table 19.1.1.4

List of MODU/FOP items under supervision of competent bodies

Item to be supervised	Body performing supervision	Document certifying compliance with requirements	
		after repair or conversion	in service
Drilling derrick	Executive body performing the supervision of drilling equipment in compliance with the drilling ship, MODU, FOP flag State legislation	Report on Commissioning of Drilling Derrick	Report on Inspection of Drilling Derrick
Drilling winch	Ditto	Ditto	Report on Inspection of Drilling Winch
Block and tackle system of drilling derrick	Ditto	Ditto	Report on Inspection of Block and Tackle System, Test Record of Travelling Block Limit Switch

Item to be supervised	Body performing supervision	Document certifying compliance with requirements	
Blowout preventer equipment	Ditto	Ditto	Report on Permission of Drilling Operations[1]
[1] Report shall be submitted after installation, inspection and testing of the blowout preventer equipment during drilling of each well.			

19.1.2 Definitions and explanations.

19.1.2.1 Definitions and explanations which are common to ships, MODU and FOP are given in Section 2, Part I "General Provisions" and in 1.1, Part III "Additional Surveys of Ships Depending on their Purpose and Hull Material" of these Rules as well as in the Guidelines. Terms and definitions specific to MODU and FOP are given in Part I "Classification" of the MODU/FOP Rules.

19.1.2.2 Additional definitions and explanations.

Preload tank is a tank within the hull of a self-elevating unit. These tanks are periodically filled with salt water ballast and used to preload the footings of the unit prior to commencing drilling operations. Preload tanks are considered equivalent to ballast tanks.

Transverse section (girth belt) includes the following:

for drilling ships (surface-type units): all continuous longitudinal members such as bottom and side shell plating, deck plating, longitudinal bulkhead plating and internal longitudinal framing;

for self-elevating units: deck plating, shell plating, internal framing of preload tanks and leg well structure;

for column-stabilized units: column and bracing plating and internals, if necessary. Deck plating, side and bottom plating of lower hulls between columns including internal stiffeners, if necessary.

Wind and water strakes are 2 strakes or equivalent area located in the vicinity of the load waterline, operating draft or operating water depth of the unit. For self-elevating units this is the area of the leg components in the vicinity of the operating water depth. For column-stabilized units this shall include portions of columns and bracing members in the vicinity of the operating draft of the unit.

Splash zone is the external surfaces of a self-elevating or column-stabilized unit that are periodically in and out of the water when the unit is at its operating depth.

Cantilever is a retractable scaffold bracket bearing the drilling facilities of an offshore drilling unit.

Sponson is a special component of the MODU structure designed to reduce the heave.

Structural elements of a submersible and semi-submersible unit:

special:

shell plating in way of stability column connections to decks and lower hulls;

deck plating, stiffened web girders and bulkheads of upper hull or platforms forming box or T-shaped bearing structures in areas subjected to considerable concentrated loads;

main bracings intersections;

semibulkheads, bulkhead and platform sections, as well as framing taking up considerable concentrated loads at intersections of bearing structure elements;

structural elements fitted for load transmission at intersections or connections of main bearing structures;

primary:

shell plating of stability columns, upper and lower hulls, and bracings;

deck plating, bulkheads and stiffened web girders of upper hull which form box or T-shaped bearing structures not subjected to considerable concentrated loads.

secondary:

internal structures including the bulkheads and recesses of stability columns and lower hulls, leg and bracings framing;

upper platform or upper hull decks except areas where these elements are primary or special ones;

large-diameter stability columns with small length-to-diameter ratios except the connections of a column or intersections.

Structural elements of a self-elevating MODU:

special:

vertical legs in way of their connections to footings;

intersections of truss-type leg elements with welded components including steel castings;

primary:

shell plating of tubular legs;

shell plating of all elements of truss-type legs;

bulkheads, decks, side and bottom plating of the topside which form box or T-shaped bearing structures;

jack house structures of legs and footings, which take up the loads from legs;

pontoon (floating foundation) structure;

secondary:

inner framing including bulkheads and web framing members of tubular legs;

inner bulkheads and recesses, as well as framing members of the top side;

inner bulkheads of leg footings except areas where the elements are principal or special ones;

deck plating, side and bottom shell plating of the topside except areas where the elements are primary or special ones;

Structural elements of FOP:

special:

structural elements of "skirt" and elements fitted in areas where the skirt is mated to the FOP bottom;

structural elements of ice strake where the platform is an oil reservoir;

structural elements in way of hull structural connections by which the overall strength is ensured, and in areas where the cross section varies abruptly;

structural areas subjected to considerable concentrated loads;

primary:

shell plating of hull structures;

watertight bulkhead plating, watertight platform plating by which the overall strength is ensured;

web girders of hull structures;

main framing of shell plating, bulkhead plating, deck plating by which the overall hull strength is ensured;

secondary:

inner structures not contributing to the overall hull strength;

auxiliary framing of shell plating and plating.

Conversion of substantial nature (major conversion) — subject to MODU and FOP, is such a conversion involving substantial alterations to:

the structure and material of structural elements defined as "special" or "primary" in accordance with the MODU/FOP Rules (a cantilever extension is not considered to be a major conversion);

leg jacking system of self-elevating units;

marine piping system (ballast systems, bilge system, propulsion system, etc.) with all of its components (cabling, electric motors/pumps, etc.);

marine electrical system (such as the main power distribution, emergency power distribution, electric propulsion system, etc.);

layout and material used in the passive fire protection system such as more than 10 % of deck area alteration or modification to the footprint of the accommodation deckhouse/superstructure or its material used for fire protection (adding another deck on top of an existing accommodation deckhouse is not considered to be a major conversion of the entire deckhouse);

fire extinguishing systems (fixed fire extinguishing systems, fire detection and fire alarm systems, including smoke detection systems, etc.) with all of its components (piping, pumps, hoses, panels, alarms, detectors, etc.).

19.1.3 Abbreviations.

Abbreviations other than those listed in 2.3, Part I "General Provisions" of these Rules are given in the MODU/FOP Rules.

19.1.4 Assessment of MODU/FOP technical condition.

19.1.4.1 When assessing MODU/FOP technical condition, the requirements of Section 5, Part I "General Provisions" of these Rules fully apply.

19.1.4.2 Where during assessment of technical condition no defects were found, or the revealed defects are within the permissible standards, the MODU/FOP technical condition is recognized as compliant with the relevant requirements of these Rules. Otherwise, MODU/FOP shall be found as non-compliant with these Rules.

19.1.4.3 Faulty condition of the items installed on MODU/FOP in addition to mandatory items required by these Rules shall not prevent recognition of MODU/FOP as compliant with the RS requirements;

however, where their use affects MODU/FOP operation or human life safety then operation of these items shall be prohibited until they are in satisfactory condition.

19.1.4.4 Faulty condition of items being under technical supervision of the competent bodies and the use of which may affect MODU/FOP operation or human life safety is a reason for the class suspension of MODU/FOP. List of MODU/FOP items under supervision of competent bodies is given in Table 19.1.1.4.

19.2 SURVEYS

19.2.1 General provisions.

19.2.1.1 The following types of survey are prescribed for MODU/FOP:

initial surveys during MODU/FOP construction and for the purpose of their acceptance under the Register technical supervision (requirements for initial survey scope under construction are given in Section 3, Part I "Classification" of the MODU/FOP Rules);

periodical surveys (special, annual, intermediate surveys, bottom surveys of MODU/FOP, surveys under continuous survey system);

special surveys;

occasional surveys (in cases mentioned in Section 3, Part I "General Provisions" of these Rules and to eliminate the consequences of an oil blowout or drilling equipment sticking).

This Section contains requirements for carrying out the above types of surveys and for execution of marine operations (MODU transit) as well as for technical supervision of MODU/FOP during repair and conversion.

19.2.1.2 Preparations for surveys and safe execution thereof.

19.2.1.2.1 All provisions and requirements specified in Section 4, Part I "General Provisions" and 1.3.2, Part III "Additional Surveys of Ships Depending on their Purpose and Hull Material" of these Rules fully apply to MODU and FOP.

19.2.1.2.2 All provisions and requirements specified in Sections 3 and 4, Part I "General Provisions" of the Guidelines fully apply to MODU/FOP surveys and are mandatory for all organizations and persons engaged in operation, repair and/or conversion of MODU/FOP.

19.2.1.2.3 In the intervals between periodical surveys and at the periods of observance of the Register requirements apply to MODU/FOP in service, verification for compliance with the provisions of the Register supervision of the organizations and persons engaged in the operation shall be carried out by the supervisory body of the MODU/FOP owner.

19.2.1.2.4 To ensure proper Register supervision of MODU/FOP during the periods specified in 19.2.1.2.3 the supervisory body shall check:

availability on MODU valid documents entitled to operation issued by the Register;

adherence to conditions ensuring safety of operation (permanent and/or temporary restrictions on the operating area, hydrometeorological conditions, etc.) specified in MODU/FOP documents issued by the Register;

observance of dates specified in MODU/FOP documents issued by the Register for submission of MODU/FOP to periodical and occasional surveys, if any;

observance of the provisions specified in the Register Certificates, concerning prohibition of MODU operation and submission thereof to the Register for survey in connection with the invalidation of these certificates.

19.2.1.2.5 When the organizations and persons carrying out MODU/FOP operation fail to observe the provisions specified in 19.2.1.2.4 and in cases that affect MODU/FOP and human life safety, the supervising body shall prohibit MODU/FOP operation until all defects are fully eliminated.

19.2.1.2.6 Verification of compliance with the Register provisions and requirements, as well as application of sanctions concerning prohibition of MODU/FOP operation by the supervisory body shall be done regardless of MODU/FOP location and operational condition.

19.2.1.2.7 Verification of compliance with the Register requirements for survey of MODU/FOP under repair carried out in service by riding crew shall be performed by MODU/FOP administration.

19.2.1.2.8 Where for a full scope survey of any MODU/FOP item at periodical surveys thereof appears the necessity condition of MODU/FOP, and/or the surveyed item under this operational condition does not affect MODU/FOP and human life safety the survey based on

sound reasons may be completed at other dates after MODU/FOP is brought into the proper operational condition.

In this case, an appropriate entry stating the due date of such submission shall be made in the relevant sections of the RS surveyor's report and in the renewed (confirmed) certificates.

19.2.1.2.9 The scope of periodical surveys and intervals between them are given in Table 19.2.1 which contains the summarized list of items of technical supervision related to classification. In case the disputes regarding the determination of scope and schedule of surveys arise, the final decision shall be made on the basis of the requirements set forth in the relevant Sections of the Rules. References to paras in Table 19.2.1 relate to the text of the present Part unless expressly provided otherwise. As regard the items of technical supervision not given in Table 19.2.1 the provision of Table 2.1.1-1 of Part II "Survey Schedule and Scope" shall be met. The extent of particular examinations, measurements, testing, etc. is set forth as minimal and may be changed by the RS surveyor based on the valid instructions and specific conditions.

19.2.1.2.10 The scope of periodical survey for MODU and FOP shall be not less than that given in Table 19.2.1.

The scope of periodical survey for ships listed in 1.1.1 and 1.1.2 of Part I "General" of the Rules for the Equipment of Sea-Going Ships shall be not less than that given in Table 2.1.1-2 of Part II "Survey Schedule and Scope" of these Rules. Instructions on survey of life-saving appliances and arrangements, signal means, radio equipment and navigational equipment are also given in 4.1.1 — 4.1.4 of Part III "Survey of Ships in Compliance with International Conventions, Codes, Resolutions and Rules for the Equipment of Sea-Going Ships" of the Guidelines.

The RS surveyor may extend the scope of surveys as deemed necessary.

19.2.1.2.11 Requirements for the scope and schedule of surveys of the ship refrigerating plant are given in Part IV "Surveys of Refrigerating Plants".

19.2.1.2.12 The extent of particular examinations, measurements, testing, etc. specified in 19.2.1.2.9 — 19.2.1.2.11 is set forth as minimal and may be changed by the RS surveyor based on the valid instructions and specific conditions.

Table 19.2.1

SCOPE OF MODU/FOP PERIODICAL SURVEYS

Symbols:

O — examination with access, opening-up or dismantling being provided where necessary;
C — external examination;
M — measurements of wears, clearances, insulation resistance, etc., actual actuation parameters of all types of protection after their check and regulation for compliance with the specified values;
H — pressure tests (hydrostatic, hydraulic, pneumatic, hydropneumatic), tightness tests (penetration, hose tests and others allowed by RS), proof/working load tests, proof/working pressure tests, whatever is applicable;
P — operational testing of machinery, equipment and arrangements, external examination included;
E — control of the availability of necessary documentation as well as valid documents and/or stamps testifying to the instrumentation being calibrated, if subject thereto.

Nos.	Item to be surveyed	Survey*														
		1 st annual	2 nd annual	3 rd annual	4 th annual	1 st special	1 st annual	2 nd annual	3 rd annual	4 th annual	2 nd special	1 st annual	2 nd annual	3 rd annual	4 th annual	3 rd special
	1 Hull[1]															
1.1	Underwater structural members (elements) of MODU, submersible MODU and FOP[2] (external examination):															
.1	legs[3]			C		O			C		O			C		O
.2	stability columns with bracings			C		O			C		O			C		O
.3	footings and tanks of legs			C		O			C		O			C		O
.4	columns of submersible sea water pumps	C	C	C	C	O	C	C	C	C	O	C	C	C	C	O
.5	underwater structures of submersible MODU and FOP[2] area of alternating waterlines and ice loads			C		O			C	C	O			C	C	O
.6	structures of submersible MODU and FOP[2]			C		O			C	C	O			C	C	O
1.2	Above-water structural members (elements) of MODU, submersible MODU and FOP[2] (external examination):															
.1	legs			C		O			C	C	O	C	C	C	C	O
.2	stability columns with bracings			C		O			C	C	O	C	C	C	C	O

Nos.	Item to be surveyed	Survey*														
.3	structure of submersible MODU, FOP[2] in the area of mooring operations supply vessels	C	C	C	C	O	C	C	C	C	O	C	C	C	C	O
.4	columns of submersible sea water pumps	C	C	C	C	O	C	C	C	C	O	C	C	C	C	O
.5	drill floors of submersible and semi-submersible MODU, FOP[2] (plating and framing)	C	C	C	C	O	C	C	C	C	O	C	C	C	C	O
.6	jack houses	C	C	C	C	O	C	C	C	C	O	C	C	C	C	O
.7	holes for legs					O					O					O
.8	stiffeners and plating of blow-out preventer area (spider deck) and its attachment to hull of MODU, FOP[2]	C	C	C	C	O	C	C	C	C	O	C	C	C	C	O
.9	skids for moving substructure for drilling derrick					O					O					O
.10	helideck and its attachment to MODU hull	C	C	C	C	O	C	C	C	C	O	C	C	C	C	O
.11	foundations of drilling equipment and winches of tensioners for lines and raiser	C	C	C	C	O	C	C	C	C	O	C	C	C	C	O
.12	foundations of equipment for underwater engineering works	C	C	C	C	O	C	C	C	C	O	C	C	C	C	O
.13	foundations of mechanisms for lifting and lowering of columns of submersible sea water pumps	C	C	C	C	O	C	C	C	C	O	C	C	C	C	O
1.3	Underwater and above-water structural members (elements) of MODU and FOP (internal examination of separate members (elements) or MODU hull):															
.1	legs					O					O					O
.2	tanks of legs					O					O					O
.3	stability columns, compartments and tanks of stability columns			C		O			C		O			C		O
.4	holes for legs, columns of submersible sea water pumps and drilling tools with associated reinforcements			C		O			C		O			C		O
.5	reinforcements of foundation of drilling equipment and winches of tensioners for lines and raiser			C		O			C		O			C		O

Nos.	Item to be surveyed	Survey*														
.6	reinforcements of foundation of equipment for underwater engineering works			C		O			C		O			C		O
.7	reinforcements of foundations of mechanisms for lifting and lowering of columns of submersible sea water pumps			C		O			C		O			C		O
.8	tanks (compartments) for drilling mud			C		OH			C		OH			C		OH
.9	chemical agent tanks for drilling mud and cement grout			C	C	OH			C		OH			C		OH
.10	tanks for oil collection at well trials	C	C	C		OH	C	C	C	C	OH	C	C	C	C	OH
.11	tanks for oil collecting				C	OH					OH					OH
.12	spaces for drilling and cement pumps	C	C	C	C	O	C	C	C	C	O	C	C	C	C	O
.13	room for drilling mud cleaning system	C	C	C	C	O	C	C	C	C	O	C	C	C	C	OH
.14	compressor room	C	C	C		O	C	C	C	C	O	C	C	C	C	OH
2 Equipment, arrangements and outfit																
2.1	Closing appliances of openings:															
.1	for tanks of legs					OH					OH					OM[5]H
.2	for ballast tanks of submersible and semi-submersible MODU, selfelevating MODU, FOP					OH					OH					OM[5]H
.3	for well cementing				C	OH					OH					OM[5]H
.4	for passage of cathodic protection cables				C	OH				C	OH				C	OH
.5	for inspection of submersible sea water pumps				C	OH				C	OH				C	OH
.6	for extra sea water discharge from sea water tank				C	C				C	C				C	C
.7	for lowering diving bell with the drive to operate closing appliance					OP				C	OP				C	OP
2.2	Anchor arrangement6															
.1	Anchor holding brackets	C	C	C	C	O	C	C	C	C	O	C	C	C	C	O
.2	Fairleads, rollers and other guide devices	C	C	C	C	O	C	C	C	C	O	C	C	C	C	O
2.3	Systems used to maintain MODU/FOP at drilling/positioning site															
.1	Anchor holding brackets	C	C	C	C	O	C	C	C	C	O	C	C	C	C	O
.2	Chain cables, ropes and design of chain/rope connections	C	C	C	C	O	C	C	C	C	OM	C	C	C	C	OM
.3	Tensioning devices	C	C	C	C	OP	C	C	C	C	OP	C	C	C	C	OP

Nos.	Item to be surveyed	Survey*														
.4	Anchor line releasing devices	C	C	C	C	O	C	C	C	C	O	C	C	C	C	O
.5	Fairleads, rollers and other guide devices	C	C	C	C	O	C	C	C	C	O	C	C	C	C	O
2.4	Mooring and boarding arrangements															
.1	Fixed mooring and boarding arrangements	C	C	C	C	O	C	C	C	C	O	C	C	C	C	O
.2	Hinged (sliding) mooring and boarding arrangements	C	C	C	C	OP	C	C	C	C	O	C	C	C	C	O
.3	Drives of hinged arrangements					OP					OP					OP
2.5	Towing arrangement															
.1	Arrangement for passing and taking in of the tow line	P	P	P	P	OP	P	P	P	P	OP	P	P	P	P	OP
2.6	Jacking system of self-elevating MODU	C	C	C	C	OP	C	C	C	C	OP	C	C	C	C	OP
2.7	Fixing arrangements of self-elevating MODU	C	C	C	C	OP	C	C	C	C	OP	C	C	C	C	OP
2.8	Arrangements for lifting and lowering of submersible sea water pumps	C	C	C	C	OP	C	C	C	C	OP	C	C	C	C	OP
3 Fire protection																
3.1	Enclosed spaces maintained in overpressure and closing appliances therein	C	C	C	C	OPH	C	C	C	C	OPH	C	C	C	C	OPH
3.2	System of water intake from sea water supply system of MODU/FOP	P	P	P	P	OP	P	P	P	P	OP	P	P	P	P	OP
3.3	Gas detection and alarm system	P	P	P	P	OP	P	P	P	P	OPH	P	P	P	P	OP
3.4	Helicopter facilities	C	C	C	C	O	C	C	C	C	O	C	C	C	C	O
3.5	Drawings and diagrams	C	C	C	C	C	C	C	C	C	C	C	C	C	C	C
3.6	System of working space flooding	C	C	C	C	C	C	C	C	C	C	C	C	C	C	C
4 Machinery installation																
4.1	Submersible sea water pumps	P	P	P	P	OP	P	P	P	P	OP	P	P	P	P	OPH
4.2	Jacking mechanisms of self-elevating MOOU	P[2]	P[2]	P[2]	P[2]	OP	P[2]	P[2]	P[2]	P[2]	OP	P[2]	P[2]	P[2]	P[2]	OP
4.3	Mechanisms for lifting and lowering of columns of submersible sea water pumps	P	P	P	P	OP	P	P	P	P	OP	P	P	P	P	OP
5 **5.1**	**Pressure vessels** Pressure vessels for raisers and heave compensation systems and their fittings	P	P	P	P	OP[3]	P	P	P	P	OP	P	P	P	P	OP[3]
5.2	Safety valves	P	P	P	P	OPH	P	P	P	P	OPH	P	P	P	P	OPH

Nos.	Item to be surveyed	Survey*														
6 Automation																
6.1	Automated and remote control, monitoring (including MODU hull) and alarm systems of the following essential machinery:															
.1	Machinery for jacking system for the hull of self-elevating MODU as well as their hydraulic systems and devices	P	P	P	P	OMP	P	P	P	P	OMP	P	P	P	P	OMP
.2	Ballast pumps, valves of submersion and immersion system and ballast tank sounding system of semi-submersible MODU	P	P	P	P	OMP	P	P	P	P	OMP	P	P	P	P	OMP
.3	Anchoring systems used for MODU position keeping	P	P	P	P	OMP	P	P	P	P	OMP	P	P	P	P	OMP
.4	Dynamic positioning systems of MODU	P	P	P	P	OMP	P	P	P	P	OMP	P	P	P	P	OMP
.5	Submersible sea water pumps and their machinery for lifting and lowering on self-elevating MODU	P	P	P	P	OMP	P	P	P	P	OMP	P	P	P	P	OMP
.6	Machinery for lifting and lowering columns of sea water supply pipes on self-elevating MODU	P	P	P	P	OMP	P	P	P	P	OMP	P	P	P	P	OMP
.7	Alarm system of fans of the spaces and electric machines with pressurized enclosures	P	P	P	P	OMP	P	P	P	P	OMP	P	P	P	P	OMP
7 Systems and piping																
7.1	Hydraulic drive system of jacking mechanisms of self-elevating MODU	P	P	P	P	OP	P	P	P	P	OP	P	P	P	P	OP
7.2	Hydraulic drive system of arrangements for lifting and lowering of columns of submersible sea water pumps	P	P	P	P	OP	P	P	P	P	OP	P	P	P	P	OP
7.3	Sea water system of self-elevating MODU	P	P	P	P	OP	P	P	P	P	OP	P	P	P	P	OP
7.4	Ventilation system of enclosed spaces maintained in overpressure	P	P	P	P	OP	P	P	P	P	OP	P	P	P	P	OP
7.5	Drilling mud emergency discharge system	O	O	O	O	OP	O	O	O	O	OP	O	O	O	O	OP
7.6	Ballast pumping system for the pontoons of submersible and semisubmersible MOOU	P	P	P	P	OP	P	P	P	P	OP	P	P	P	P	OP

Nos.	Item to be surveyed	Survey*														
	8 Electrical equipment															
8.1	Electric propulsion plants	P	P	P	P	OEMP	P	P	P	P	OEMP	P	P	P	P	OEMP
8.2	Electric drives of essential arrangements and machinery, as well as their control, protective, starting and monitoring devices of:															
.1	jacking mechanisms of self-elevating MODU	P[2]	P[2]	P[2]	P[2]	OMP	P[2]	P[2]	P[2]	P[2]	OMP	P[2]	P[2]	P[2]	P[2]	OMP
.2	mechanisms for lifting and lowering of sea water pipe and columns of submersible sea water pumps	P	P	P	P	OMP	P	P	P	P	OMP	P	P	P	P	OMP
.3	submersible sea water pumps	P	P	P	P	OMP	P	P	P	P	OMP	P	P	P	P	OMP
.4	ballast pumps and valves of submersion and immersion system semisubmersible MODU	P	P	P	P	OMP	P	P	P	P	OMP	P	P	P	P	OMP
.5	emergency selective shutdown facilities for disconnection of consumers	C	C	C	C	OC	C	C	C	C	OC	C	C	C	C	OC
.6	anchoring systems for MODU position keeping	P	P	P	P	OMP	P	P	P	P	OMP	P	P	P	P	OMP
.7	dynamic positioning systems of MODU	P	P	P	P	OMP	P	P	P	P	OMP	P	P	P	P	OMP
.8	fans of spaces and pressurized enclosures	P	P	P	P	OMP	P	P	P	P	OMP	P	P	P	P	OMP
8.3	Cabling**															
	Protection of cables (additional) by watertight and fire-fighting bulkheads and decks	C	C	C	C	O	C	C	C	C	O	C	C	C	C	O
8.4	Signaling devices of:															
.1	gas detection and alarm9	P	P	P	P	OMP	P	P	P	P	OMP	P	P	P	P	OMP
.2	control of limiting parameters of jacking system of self-elevating MODU	P	P	P	P	OMP	P	P	P	P	OMP	P	P	P	P	OMP
.3	location of remote-controlled valves of ballast and bilge systems	P	P	P	P	OMP	P	P	P	P	OMP	P	P	P	P	OMP
.4	level of liquid in tanks, bilges, etc.	P	P	P	P	OMP	P	P	P	P	OMP	P	P	P	P	OMP
.5	control of air pressure of ventilation systems of enclosed spaces and equipment maintained in overpressure	P	P	P	P	OMP	P	P	P	P	OMP	P	P	P	P	OMP
.6	dangerous gas concentration strengthening	P	P	P	P	OPE	P	P	P	P	OPE	P	P	P	P	OPE

Nos.	Item to be surveyed	Survey*														
.7	malfunction of ventilation systems intended for overpressure in monitored spaces and pressurized type electrical equipment	P	P	P	P	OP	P	P	P	P	OP	P	P	P	P	OP
.8	malfunction of the systems of perimeter lights and navigation lights for aeronautic warnings when a helicopter lands or takes off	P	P	P	P	OP	P	P	P	P	OP	P	P	P	P	OP
8.5	Heating cable systems	C	C	C	C	O	C	C	C	C	O	C	C	C	C	O

[1] Only integral tanks are subject to the Register technical supervision. The scope of thickness measurement of hull structures and tank tests is shown in the relevant chapters of this Section.

[2] Readiness for operation, running order of safety, protection and interlocking devices, remote (automatic) control and alarm systems are checked during the annual survey. Check of the MODU jacking system is not required.

[3] H — only for vessels which are not accessible to full internal examination.

[4] Verification of availability of the document issued by a competent body confirming the specified characteristics of gas detectors during special survey.

[5] Residual thickness measurements starting from the third special survey shall be carried out during every special survey of a unit in the scope determined by the RS surveyor depending on the technical condition.

[6] After 5 years of service, anchor chains, lines and chain-to-line splices shall be examined (C) in way of fairlead penetrations and other guides including semi-submersible MODU when prepared to the move to a new drilling site. Tensioners are subject to close-up examination (O) and operation test (P).

* After 3rd special survey, the scope of subsequent annual, special surveys shall be repeated as for 3-rd cycle.

** During annual surveys measurements of insulation resistance of cabling and essential electric machinery and devices, cabling and electrical equipment in hazardous spaces and areas shall be carried out. During special surveys measurements of the insulation resistance of all cabling and all stationary electric machinery and devices shall be carried out.

19.2.1.3 Ship's documentation.

19.2.1.3.1 The requirements of Section 6, Part I "General Provisions" apply in full to MODU/FOP except for the ship's documentation record. The list of technical documentation of MODU/FOP is given in Annex 1.2 to these Rules.

19.2.1.4 Thickness measurement procedures.

19.2.1.4.1 The requirements specified in 1.5 of the present Part apply in full to thickness measurement of hull structures.

19.2.2 Special survey.

19.2.2.1 General provisions.

19.2.2.1.1 As regards general provisions for MODU/FOP special survey, the requirements of 2.4.1, Part II "Survey Schedule and Scope" fully apply. Where necessary, the interval between special surveys may be reduced following a decision made by RHO.

19.2.2.1.2 At special survey of the drilling unit, its hull, arrangements, equipment and outfit, machinery installation, electrical equipment shall be checked whether they meet the requirements of these Rules, regulating standards and technical characteristics, as well as requirements for its configuration, structure, arrangement and installation of items of technical supervision and their technical condition.

19.2.2.1.3 The scope of the special survey of items of technical supervision specific to drilling units is determined by the Register on the basis of Table 19.2.1 for the relevant special survey depending on the age of the unit and giving due note to its technical condition. For special surveys of MODU and FOP of unconventional designs which are laid up or in an extraordinary circumstances, specific requirements shall be established for each particular case.

19.2.2.1.4 Prior to commencement of special survey, a meeting on survey planning and scope shall be held so as to ensure the safe and efficient execution of the survey. A survey planning meeting shall be held between the RS attending surveyor, the shipowner or duly authorized representative of the shipowner, the master of the ship or duly authorized representative of the master as well as, at the shipowner's discretion, the representatives of other interested organizations, and the Minutes of Meeting on Planning and Arrangement of Ship's Survey (form 6.6.2) shall be drawn up. Prior to commencement of the survey the RS surveyor shall verify that the shipowner has prepared the ship for survey and provided all necessary conditions for quality and safe execution of the survey and testing of items (refer to Section 4, Part I "General Provisions").

19.2.2.1.5 In advance of each special survey prescribed, the MODU/FOP owner shall, in co-operation with the Register, work out a specific survey programme or the Programme under Continuous Survey System (hereafter, the Programme) for every MODU/FOP type in service provided the MODU/FOP is covered by the above system. The survey shall not start before the Programme has been agreed with the Register. The Programme shall consider all the amendments applicable to the survey requirements which have come into force after the date of the latest special survey. The Programme shall be submitted to the RS Branch Office for in-service supervision or to the RS Branch Office which will perform the MODU/FOP survey, not later than 1 month before the prescribed special survey date. Where it is planned to submit the MODU/FOP before the due date, the Programme shall be submitted 1 month before the planned survey date.

The Programme shall be in a written format and contain at least the following information:

.1 basic information about MODU/FOP and its main parameters;

.2 MODU/FOP survey schedule and scope including provisions for its bottom survey. With regard to the Continuous Survey Programme, the survey scope and schedule shall be assigned for the forthcoming 5-year period whereby considering that the survey schedule and scope shall be equivalent to the special (renewal), intermediate survey and survey of the outside of the MODU/FOP bottom and related items;

.3 list of tanks (ballast, cargo, fuel, etc.) and enclosed dangerous zones with indication of their purpose and location;

.4 data on the condition of the corrosion protection system (if any) in ballast tanks;

.5 survey conditions (for instance, information on tank cleaning, etc., their degassing, ventilation, lighting, etc.);

.6 survey equipment;

.7 access to structures and access methods;

.8 MODU/FOP close-up survey scope and residual thickness measurement of structures;

.9 specifying tanks for testing where necessary;

.10 provisions for structural element tests with the use of non-destructive testing (NDT) where required by these Rules; NDT areas;

.11 main structural drawings including information on using higher strength steels; survey item plans;

.12 description of items to be surveyed with subdivision of the MODU/FOP structural elements into special, primary, secondary with reference to relevant Parts of these Rules;

.13 data on permissible residual scantlings of the MODU/FOP hull structures with their subdivision into special, primary and secondary structural elements;

.14 permissible performance parameters for machinery and electrical equipment;

.15 modernization scope (where applicable); information on modernization project approval by RS;

.16 information on the service supplier (name, Recognition Certificate No. and validity) engaged in residual thickness measurements;

.17 damage data;

.18 critical structural areas and suspect areas, if any.

Depending on the country where the special survey is carried out, the ship repair yard, working language of the crew, the Programme may be submitted either in Russian or English.

It is recommended, the Programme to be drawn up in electronic format as a checklist, e.g. with cells to confirm that the survey is carried out by items which shall be complied with for a particular type of survey.

Register-agreed Programme shall be submitted to the RS surveyor on board the MODU/FOP prior to the commencement of relevant survey and shall be readily available. Priorto the special survey itis recommended to submit the MODU/FOP for a pre-repair survey by the Register in order to specify the repair scope.

19.2.2.1.6 In addition to annual survey requirements in accordance with 19.2.3, the special surveys shall include the following examinations, tests, and checks of sufficient extent to ensure that the hull, structure, equipment, and machinery are in satisfactory condition and that MODU/FOP complies with the applicable requirements of these Rules for the new 5-year period of class to be assigned subject to proper maintenance and operation and the periodical surveys carried out at the due dates.

19.2.2.1.7 Special survey shall include examination of underwater part in compliance with the requirements of 19.2.5.

19.2.2.1 Special provisions.

19.2.2.2.1 At all special surveys, self-elevating MODU jacking system, submersible sea water pump lifting/lowering arrangements, self-elevating MODU fixing arrangements are subject to thorough examination and testing in operation for the intended purpose.

19.2.2.2.2 At each special survey, the spaces maintained in overpressure and closing appliances therein shall be examined and tested for ability to ensure required excessive pressure.

19.2.2.2.3 At each special survey, the system of water intake from the MODU sea water supply system shall be tested in operation and examined. Gas detection and alarm system shall be examined, tested in operation and tested by test pressure.

19.2.2.2.4 At each special survey, the fire-fighting equipment and helideck shall be thoroughly examined.

19.2.2.2.5 At each special survey, the following items shall be examined and tested in operation:

submersible sea water pumps;

self-elevating MODU jacking mechanisms;

lifting/lowering mechanisms for submersible sea water pumps.

19.2.2.2.6 At each special survey, the pressure vessels for raisers and heave compensator systems and their fittings shall be surveyed internally and externally, as well as shall pass hydraulic tests each 10 years, areas which are not available to full internal survey — each 5 years together with safety valves.

19.2.2.2.7 Self-elevating MODU hull position control system; automatic and remote control of selfelevating MODU jacking system; automated control of valves and ballast system arrangements together with the alarm system and protection shall be subjected to close-up survey and test in operation at each special survey.

19.2.2.2.8 At each special survey the following items shall be subjected to thorough examination and test in operation: hydraulic drives of self-elevating MODU jacking mechanisms and hydraulic drives of mechanisms for lifting/lowering of columns of submersible sea water pumps; self-elevating MODU sea water supply system; blowing and flooding system for leg tanks; ventilation of spaces maintained in overpressure; emergency drilling mud discharge system.

19.2.2.2.9 At each special survey, the following items are subject to the thorough examination, testing in operation and insulation measurement:

electrical equipment of self-elevating MODU jacking mechanisms and of lifting/lowering mechanisms for submer-sible sea water pumps and of pumps themselves, as well as selective (discriminative) emergency load switch-off devices.

19.2.2.2.10 At each special survey, the following items are subject to the thorough examination and test in operation and measurement of insulation of signalling devices: gas detection and alarm, control of limiting values of self-elevating MODU jacking system and mechanisms, position of remotely operated valves of the ballast and bilge systems, control of the liquid level in compartments and bilge wells, control of air pressure in the ventilation system of the spaces maintained in overpressure, failures of the ventilation system of hazardous spaces; control of water level in the sea water tank; MODU hull position control.

19.2.2.3 Hull.

19.2.2.3.1 MODU/FOP of all types.

19.2.2.3.1.1 At special survey of the MODU and FOP hulls, the compliance with the requirements of the MODU/FOP Rules and these Rules for hull structures shall be verified, and their technical condition in respect of wear extent, damages and watertight/weathertight integrity shall be assessed.

19.2.2.3.1.2 The survey of the hull shall be supplemented by thickness measurements and testing as required, to verify the structural integrity. The aim of the survey shall discover excessive diminution, substantial corrosion, significant deformation, fractures, damages or other structural deterioration that may be present.

19.2.2.3.1.3 Thickness measurements shall be carried out in accordance with Tables 19.2.2.3.1-1 — 19.2.2.3.1-4 depending on the type of the drilling unit. The RS surveyor may extend the thickness measurements as deemed necessary. When thickness measurements indicate substantial corrosion, the extent of thickness measurements shall be increased to determine areas of substantial corrosion. Provisions for such additional thickness measurements are given in Table 19.2.2.3.1-5. Thickness measurements of areas with substantial corrosion shall be carried out at each annual survey. Residual thickness measurements shall be carried out by service suppliers having Recognition Certificates issued by the Register or by ACS — IACS member.

General provisions for control of thickness measurements from the Register and approval of service suppliers are specified in Section 3 of Annex 2 to these Rules.

Table 19.2.2.3.1-1

Minimum requirements for thickness measurements for drilling ships and barges (surface-type units) at special survey

Special survey No. 1 age ≤ 5	Special survey No. 2 5 < age ≤ 10	Special survey No. 3 10 < age ≤ 15	Special survey No. 4 and subsequent 15 < age
1. Suspect areas	**1.** Suspect areas **2.** One transverse section of deck plating abreast the moon pool opening within the amidships 0,6*L* together with internals. Where unit is configured with side ballast tanks, the plating and internals of the tanks are also to be gauged in way of the section chosen **3.** Moon pool boundary bulkhead plating	**1.** Suspect areas **2.** Two transverse sections (girth belts) of deck, bottom and side plating abreast the moon pool and one hatch opening within the amidships 0,6*L* together with internals in way. Where unit is configured with side ballast tanks, the plating and internals of the tanks to be gauged in way of the required belts. Remaining internals in ballast tanks to be gauged **3.** Moon pool boundary bulkhead plating **4.** Internals in forepeak tank and aft peak tank	**1.** Suspect areas **2.** A minimum of three transverse sections (girth belts) of deck, bottom, side, and longitudinal bulkhead plating in way of the moon pool and other areas within the amidships 0,6*L* together with internals in way (including in perimeter ballast tanks, where fitted in way of belts) **3.** Moon pool boundary bulkhead plating **4.** Internals in forepeak and after peak tanks **5.** Lowest strake of all transverse bulkheads in hold spaces. Remaining bulkhead plating to be gauged as deemed necessary by the RS surveyor **6.** All plates in wind and water strakes (approximately 2 strakes of plating), port and starboard, full length **7.** All exposed main deck plating full length and all exposed first-tier superstructure deck plating (poop, bridge and forecastle decks) **8.** All keel plates full length plus additional bottom plating as deemed necessary by the RS surveyor, particularly in way of cofferdams and machinery spaces **9.** Duct keel or pipe tunnel plating or pipe tunnel plating and internals **10.** Plating of sea chests. Shell plating in way of overboard discharges as considered necessary by the attending surveyor

Notes: 1. Thickness measurement locations shall be selected to provide the best representative sampling of areas likely to be most exposed to corrosion, considering ballast history and arrangement and condition of protective coatings.
2. Thickness measurements of internals may be specially considered by the RS surveyor if the hard protective coating is in GOOD condition.

Special survey No. 1 age ≤ 5	Special survey No. 2 5 < age ≤ 10	Special survey No. 3 10 < age ≤ 15	Special survey No. 4 and subsequent 15 < age
3. At the RS surveyor's discretion, the thickness measurement extent may be increased based on results of thickness measurement at random. 4. For units less than 100 m in length, the number of transverse sections required at special survey No. 3 may be reduced to one (1), and the number of transverse sections required at subsequent special surveys may be reduced to two (2). 5. For units more than 100 m in length, at special survey No. 3 thickness measurements of exposed deck plating within amidship 0,5*L* may be required.			

Table 19.2.2.3.1-2

Minimum requirements for thickness measurements for self-elevating units at special survey

Special survey No. 1 age ≤ 5	Special survey No. 2 5 < age ≤ 10	Special survey No. 3 10 < age ≤ 15	Special survey No. 4 and subsequent 15 < age
1. Suspect areas[1]	**1.** Suspect areas[1] **2.** Legs in way of splash zone **3.** Representative gaugings of primary structural elements where wastage, at the RS surveyor's discretion, is evident **4.** Representative gaugings of upper hull deck and bottom plating and internals of one preload (ballast) tank	**1.** Suspect areas[1] **2.** Legs in way of splash zone **3.** Representative gaugings, throughout, of special and primary structural elements **4.** Leg well structure **5.** Representative gaugings of deck, bottom, and side shell plating of hull and mat **6.** Representative gaugings of upper hull deck and bottom plating and internals of at least two preload (ballast) tanks	**1.** Suspect areas[1] **2.** Legs in way of splash zone **3.** All special and primary structural elements **4.** Leg well structure **5.** Representative gaugings of deck, bottom, and side shell plating of hull and mat **6.** Substructure of derrick as deemed necessary by the RS surveyor **7.** Representative gaugings of internals of all preload (ballast) tanks
[1] It is necessary to pay attention to platforms supports in a splash zone. N o t e s : 1. At the RS surveyor's discretion, the thickness measurement extent may be increased based on results of thickness measurement at random. 2. Thickness measurement locations shall be selected in such a way as to enable identification of the areas with intensive corrosion with due regard to the previous ballasting, position and condition of protective coating. 3. The extent of internal hull-structural thickness measurements may be specially considered by the RS surveyor if the hard protective coating is in good condition.			

Table 19.2.2.3.1-3

Minimum requirements for thickness measurements for column-stabilized units at special survey

Special survey No. 1 age ≤ 5	Special survey No. 2 5 < age ≤ 10	Special survey No. 3 10 < age ≤ 15	Special survey No. 4 and subsequent 15 < age
1. Suspect areas **2.** Columns and bracings where, at the RS surveyor's discretion, wastage is evident in splash zone	**1.** Suspect areas **2.** Representative gaugings of columns and bracings in splash zone together with internals in way **3.** Special and primary structural elements where, at the RS surveyor's discretion, wastage is evident	**1.** Suspect areas **2.** Representative gaugings, throughout, of special and primary structural elements **3.** One transverse section (girth belt) of each of 2 columns and 2 bracings in splash zone together with internals in way **4.** Lower hulls in way of mooring lines where, at the RS surveyor's	**1.** Suspect areas **2.** All special and primary structural elements **3.** One transverse section (girth belt) of each of one-half of the columns and bracings in splash zone and internals in way 2 (i.e. gauge half of the unit's columns and bracings in splash zone) **4.** Lower hulls in way of mooring lines where, at the RS surveyor's

Special survey No. 1 age ≤ 5	Special survey No. 2 5 < age ≤ 10	Special survey No. 3 10 < age ≤ 15	Special survey No. 4 and subsequent 15 < age
		discretion, wastage is evident **5.** One transverse section (girth belt) of each lower hull between one set of columns	discretion, wastage is evident **5.** One transverse section (girth belt) of each lower hull between one set of columns **6.** Representative gaugings of substructure of drilling derrick
Note: 1. At the RS surveyor's discretion, the thickness measurement extent may be increased based on results of thickness measurement at random. 2. Thickness measurement locations shall be selected in such a way as to enable identification of areas with intensive corrosion with due regard to the previous ballasting, position and condition of protective coating. 3. The extent of internal hull structural thickness measurement may be specially considered by the RS surveyor if the hard protective coating is in good condition.			

Table 19.2.2.3.1-4

Minimum requirements for thickness measurement for FOP at special survey

Special survey No. 1 age ≤ 5	Special survey No. 2 5 < age ≤ 10	Special survey No. 3 10 < age ≤ 15	Special survey No. 4 and subsequent 15 < age
1. Suspect areas **2.** Representative gaugings of special structural elements	**1.** Suspect areas **2.** Representative gaugings of special and primary structural elements	**1.** Suspect areas **2.** All special and primary structural elements **3.** All secondary structural elements	**1.** Refer to column 3

Table 19.2.2.3.1-5

Guidance for additional thickness measurements in way of substantial corrosion

Hull structural element	Extent of measurement	Pattern of measurement
Plating	Suspect area and adjacent plates	5 point pattern over 1 m^2
Stiffeners	Suspect area	3 measurements each in line across web and flange

Table 19.2.2.3.1-6

MODU/FOP hull tightness test at special survey

Nos.	Item to be tested	Test procedures and standards
1	Ballast compartments of stability columns and lower hulls (pontoons)	Flooding up to the air pipe top
2	Chemical reagent tanks for drilling mud and cement grout	Ditto
3	Tanks for oil collection when testing a well	Ditto
4	Leg tanks	Flooding to the head equal to the pressure in the tank blowing-off system

19.2.2.3.1.4 Special attention shall be given to the intensive corrosion areas, splash zones on structure, legs or related structure, and in ballast tanks, pre-load tanks, free-flooding spaces, spud cans and mats.

19.2.2.3.1.5 The following structures shall be examined at least:

the hull or platform structure including tanks, watertight bulkheads and deck, cofferdams, void spaces, sponsons, chain lockers, duct keels, helicopter deck and its supporting structure, machinery spaces, peak spaces, steering gear spaces, and all other internal spaces shall be examined externally and internally for damage, fractures, or excessive diminution. Thickness gauging (measurements) of plating and framing may be required by the RS surveyor where wastage is evident or suspected;

suspect areas and critical structural areas shall be examined, and the RS surveyor may require the testing for tightness, non-destructive testing or thickness measurements to be carried out;

structures such as derrick substructure and supporting structure, jack-houses, deck houses, superstructures, helicopter landing areas, raw water (sea water intake) towers and their respective attachments to the deck or hull;

machinery foundations;

foundations and supporting headers, brackets, and stiffeners for drilling related apparatus, where attached to hull, deck, superstructure or deck house.

19.2.2.3.1.6 All special and primary structural elements and identified critical structural areas shall be subjected to close-up survey.

19.2.2.3.1.7 All tanks, compartments as well as free-flooding spaces throughout the drilling unit shall be examined externally and internally for excess wastage or damage.

19.2.2.3.1.8 At all special surveys, the following items are subject to thorough examination and hydraulic testing:

drilling mud tanks,

chemical agent for drilling mud and cement grout, oil collection at a well trials;

parts of stability columns and legs.

19.2.2.3.1.9 At all special surveys, the closing appliances for: leg tanks; ballasting of pontoons, cementing of wells; for passage of cathodic protection cables, for examination of sea water submersible pumps — are subject to thorough examination and hydraulic tests, and the closing appliances for surplus sea water discharge from sea water tank — beginning from the third special survey.

19.2.2.3.1.10 Requirements for tank and compartment testing are given in Table 19.2.2.3.1-6. Internal examination and testing of void spaces, compartments filled with foam or corrosion inhibitors, and tanks used only for lube oil, light fuel oil, diesel oil, fresh water, drinking water or other non-corrosive products may be waived provided that upon an overall survey the RS surveyor considers their condition to be satisfactory. External thickness gauging may be required to confirm corrosion control.

19.2.2.3.1.11 The RS surveyor shall examine the condition of corrosion prevention system of ballast tanks. Where a hard protective coating is found in POOR condition and it is not renewed, where soft or semihard coating has been applied, or where a hard protective coating was not applied from time of construction, the tanks in question shall be subsequently examined annually. In justified cases, as reasonably practicable, annual examinations may be carried out at a frequency determined by the RS surveyor. Thickness measurements shall be carried out as deemed necessary by the RS surveyor. Based on survey results, the RS surveyor makes a record on the necessity of ballast tanks to be examined at annual intervals (or at other intervals) into the relevant RS reporting documents, the List of Ship's Status.

19.2.2.3.1.12 For assessment of technical condition of structures of MODU and FOP the class notations of which contain descriptive notations specified in 2.5.1, Part I "Classification" of the Rules for the Classification, Construction and Equipment of MODU/FOP, the requirements of Section 5, Part I "General Provisions" of these Rules and the following requirements shall be considered:

.1 when the thickness of any MODU/FOP special or primary structural element is reduced anywhere throughout the entire cross section by more than 10 % as compared with the initial (as-built) thickness, the structure fitness for further operation is subject to special consideration by the Register in each particular case. In this case, the MODU/FOP owner shall submit all necessary technical calculations;

.2 for MODU/FOP secondary structural elements, the standards for hull with the defects given in Annex 2 to these Rules shall be applied;

.3 damage to special structural elements shall be eliminated in all cases;

.4 damage to primary and secondary structural elements shall not exceed the allowable standards and shall be repaired in accordance with the provisions of Section 5 in Annex 2 to these Rules.

19.2.2.3.1.13 Where necessary, the assessment of the technical condition of hull structural elements in respect of wear extent, damages and watertight/weathertight integrity shall be supplemented by a calculation of wear and damage impact on the overall and local strength.

19.2.2.3.2 Drilling ships and barges (surface-type units).

In addition to the requirements of 19.2.2.3.1 the following items shall be surveyed: structural appendages and ducts for positioning units.

19.2.2.3.3 Self-elevating units.

In addition to the requirements of 19.2.2.3.1 the following items shall be surveyed:

all legs, including chords, diagonal and horizontal braces, gussets, racks, joints, together with leg guides. Tubular or similar type legs shall be examined externally and internally, together with internal stiffeners and pinholes as applicable;

structure in, around and under jack-house and leg wells. Non-destructive testing of these areas may be required;

leg jacking or other elevating systems externally;

leg connections to bottom mats or spud cans, including non-destructive testing of leg connections to mats or spud cans;

jetting piping systems or other external piping, particularly where penetrating mats or spud can;

spud cans or mats. Where the spud cans or mat are partly or entirely obscured below the mud line where the special survey is otherwise being completed, consideration may be given to postponement of the examinations until the next MODU move.

19.2.2.3.4 Column-stabilized units.

In addition to the requirements of 19.2.2.3.1 the following items shall be surveyed:

connections of columns and diagonals to upper hull, structure or platform and lower hull, structure or pontoons. Joints of supporting structure including diagonals, braces and horizontals, together with gussets and brackets. Internal continuation or back-up structure for the above. Non-destructive examination may be required of these areas.

19.2.2.3.5 Fixed offshore platforms.

In addition to 19.2.2.3.1, the following items shall be surveyed:

structural elements of "skirt" and elements fitted in areas where the skirt is mated to the bottom;

structural elements of ice strake;

structural elements in way of hull structural connections by which the overall strength is ensured, and in areas where the cross section varies abruptly;

structural areas subjected to considerable concentrated loads.

19.2.2.4 Arrangements, equipment and outfit.

19.2.2.4.1 General provisions for ship's arrangements survey are given in 2.4.3.1 of Part II "Survey Schedule and Scope".

19.2.2.4.2 Openings in hull, superstructures and deckhouses and their closing appliances.

19.2.2.4.2.1 At survey of closing appliances of openings in hull, superstructures and deckhouses, the requirements of 2.4.3.2, Part II "Survey Schedule and Scope" shall be met.

19.2.2.4.2.2 The summarized scope of surveys of specific for MODU/FOP closing appliances at periodical surveys is given in Table 19.2.1.

19.2.2.4.2.3 Closing appliances for extra sea water discharge from sea water tanks shall be externally examined. The remaining closing appliances shall be subjected to thorough examination and tightness test.

19.2.2.4.2.4 The drive to operate the closing appliance for lowering diving bell shall be tested in operation.

19.2.2.4.2.5 Tightness test of the manholes of leg tanks and in subdivision bulkheads shall be carried out together with the testing of these tanks and compartments for tightness.

19.2.2.4.2.6 Closing appliances for ballasting of pontoons of submersible and sem-submersible MODU shall be tested together with compartments by flooding up to the air pipe top of the compartment.

Closing appliances for well cementing, for passage of cathodic protection cables and closing appliances of manholes for inspection of submersible sea water pumps shall be tested for tightness by water jet (hose testing) under a pressure not less than 200 kPa.

19.2.2.4.2.7 For assessment of technical condition of metallic closing appliances given in Table 19.2.1 of this Part, the wear and defect standards specified in Annex 2 to these Rules shall be met.

19.2.2.4.3 Rudder and steering gear.

19.2.2.4.3.1 At steering gear survey, the requirements of 2.4.3.3, Part II, "Survey Schedule and Scope" shall be met.

19.2.2.4.3.2 Testing in operation of the rudder and steering gear at special survey may be only carried out when MODU moves to a new drilling location provided the schedule of periodical surveys is observed.

19.2.2.4.4 Anchor arrangement.

19.2.2.4.4.1 At anchor arrangement survey, the requirements of 2.4.3.4, Part II "Survey Schedule and Scope" shall be met.

19.2.2.4.4.2 The summarized scope of surveys of anchor holding brackets, and chain cable guide device forming part of the anchor arrangement at periodical MODU surveys is given in Table 19.2.1.

19.2.2.4.4.3 Testing in operation of the anchor arrangement at special survey may be carried out when MODU moves to a new drilling location provided the schedule of periodical surveys is observed as well as the depth of the basin.

19.2.2.4.5 Systems used to maintain MODU/FOP at drilling/positioning site.

19.2.2.4.5.1 The summarized scope of positioning systems surveys at initial and periodical MODU/ FOP surveys is given in Table 19.2.1.

19.2.2.4.5.2 Survey of anchor machinery (winches), systems and electrical equipment forming part of the positioning system shall be carried out in accordance with the requirements of 2.4.3, Part II "Survey Schedule and Scope" of these Rules and provisions of Annex 53 to the Guidelines.

19.2.2.4.5.3 For assessment of technical condition of the anchor lines, the wear and defect standards specified in 2.4.3.4.6 of Part II "Survey Schedule and Scope" shall be considered.

19.2.2.4.5.4 Certificates for anchor, chain cables and ropes shall be available on board the MODU/FOP.

19.2.2.4.6 Mooring and boarding arrangements.

19.2.2.4.6.1 The summarized scope of mooring and boarding arrangements surveys at periodical MODU/FOP surveys is given in Table 19.2.1.

19.2.2.4.6.2 Survey of machinery, systems and electrical equipment forming part of the mechanical drives of hinged (sliding) mooring and boarding arrangements shall be carried out in accordance with the requirements of 2.2.5 and 2.2.7, Part II "Survey Schedule and Scope".

19.2.2.4.6.3 At mooring and boarding arrangements survey the following shall be verified:

condition of support and load-carrying components (presence of deformations, cracks, condition of welds);

condition of carrying ropes and their guide blocks for the assessment of whose technical condition the wear standards given in 10.6.2, 10.6.3 of the Rules for the Cargo Handling Gear of Sea-Going Ships shall be considered;

fitting of the hinged (sliding) mooring arches, platforms and embarkation ladders to support structures in working condition;

actuation of limit switches in extreme positions of the hinged (sliding) mooring and boarding arrangements, as well as actuation of stoppers fixing the hinged (sliding) mooring arches, platforms and embarkation ladders in working position and in "stowed for sea" position.

19.2.2.4.7 Mooring arrangement.

19.2.2.4.7.1 At mooring arrangement survey, the requirements of 2.4.3.5, Part II "Survey Schedule and Scope" shall be met.

19.2.2.4.8 Towing arrangement.

19.2.2.4.8.1 At towing arrangement survey, the requirements of 2.4.3.6, Part II "Survey Schedule and Scope" shall be met.

19.2.2.4.8.2 The summarized scope of surveys of arrangements for passing and taking in of the tow line forming part of the MODU towing arrangement at periodical surveys is given in Table 19.2.1.

19.2.2.4.8.3 The components of the arrangement for passing and taking in of the tow line shall not have any excessive wear, scores, deformations, cracks and other defects.

19.2.2.4.9 Jacking system for the hull of self-elevating MODU.

19.2.2.4.9.1 The summarized scope of surveys of the jacking system for the hull of self-elevating MODU at periodical surveys is given in Table 19.2.1.

19.2.2.4.9.2 Survey of machinery, systems and electrical equipment forming part of the jacking system for the hull of self-elevating MODU shall be carried out in accordance with the requirements of 19.2.2.6 and 19.2.2.8.

19.2.2.4.9.3 The following items shall be subjected to thorough examination:

structural components of jacks:

operated hydraulically — sliders, catches, traverses, guides, locks, supports, plates, fastenings (bolts, pins, nuts);

operated mechanically by means of rack-and-pinion arrangement — rack-and-pinion shafts, pinions, gear wheels, shafts, jack frames, fastenings (bolts, pins, nuts);

structural components of stop, jack relieving devices — support screws with nuts, supporting plates, fastenings (bolts, pins, nuts);

structural components of fixing devices — screws with nuts, plates, fastenings (bolts, pins, nuts).

At this survey, the jacking system shall be tested in operation under the maximum operational load of the unit at a depth of basin in the range of basin depths specified in the Operating Manual of the selfelevating MODU.

During testing in operation, the following shall be performed:

lowering of legs on seabed;

pressing of legs into seabed;

elevating of the hull on legs to a height equal to the clearance specified in the Operating Manual of the self-elevating MODU;

holding of the hull in this position, being supported with hydraulic cylinders or rack-and-pinion arrangement within not less than two hours, with securing the hull by fixing devices, followed by keeping the hull on the jack relieving device;

launching of the hull on water;

pulling-out of legs from seabed and lifting them to "stowed for sea" position.

19.2.2.4.9.4 During operation of the jacking system the following shall be verified:

for jacks — smoothness and synchronism of movement, absence of knocking, seizing, sticking and warping of moving and rotating parts, as well as absence of spontaneous shifting of the hull or legs, actuation of limit switches;

for fixing devices — unobstructed movement of the rods along the guides and sliders along the grooves of the wedge boxes, tight fit of the wedge box plates to the leg teeth, and during returning — to the wedge boxes, free movement of nuts along the screws;

for supporting device — free passage of moving parts through the jack house structural elements, absence of warping.

19.2.2.4.9.5 Testing in operation of the jacking system at special survey may be carried out when the self-elevating MODU moves to a new drilling site provided the schedule of periodical surveys is observed.

19.2.2.4.9.6 For assessment of technical condition of the jacking system, the following shall be considered:

when the thickness of any one structural element of the jacking system is reduced anywhere throughout the entire cross section by more than 10 % as compared with the initial (as-built) thickness, further system operation shall be reviewed by the Register, at that, the owner of self-elevating MODU shall submit all necessary technical calculations to the Register;

the ultimate permissible gaps, deviation of roundness (ovality), straightness, cylindricity (conicity) and misalignment shall not exceed the limits specified in the relevant operating manuals and the manufacturer's files;

the value of active surface of gearing shall not be less than 90 % along the gear face and 60 % along the tooth depth;

no cracks, spalling and deformation shall be permitted.

19.2.2.4.10 Arrangements for lifting and lowering columns of submersible sea water pumps.

19.2.2.4.10.1 The summarized scope of surveys of the arrangement for lifting and lowering columns of submersible sea water pumps at periodical MODU surveys is given in Table 19.2.1.

All independent arrangements intended for lifting and lowering columns of submersible sea water pumps available on MODU shall be surveyed.

19.2.2.4.10.2 Survey of machinery, systems and electrical equipment being part of the arrangement for lifting and lowering columns of submersible sea water pumps shall be carried out in accordance with the requirements of 19.2.2.6 and 19.2.2.8.

19.2.2.4.10.3 At special survey, the columns with guides, stoppers, fastenings (bolts, pins, nuts) and ropes shall be subjected to thorough examination.

At this survey, the arrangement shall be tested in operation by means of lifting and lowering the column with pump to extreme down and top positions with the column being stopped and fixed in not less than two intermediate positions.

19.2.2.4.10.4 During operation of the arrangement for lifting and lowering columns of submersible sea water pumps the following shall be verified:

smoothness of operation, absence of seizing, sticking, warping and spontaneous rotation of the column around its own axis when moving in the well;

setting of the column into the extreme down position;

operation of stoppers, actuation of limit switches, time necessary to lower the column (without stopping in intermediate positions) from the extreme top to extreme down positions;

with final installation in the down position and with the pump being started.

19.2.2.4.10.5 For assessment of technical condition of the arrangement, the following shall be met:

parts worn to 10 % in thickness or diameter, as well as parts with cracks, fractures or residual deformation shall not be allowed for operation;

wire rope shall not be used if in any area along its length equal to eight diameters, number of breaks of wires is 10 % and more of the total number of the latter, as well as if there is a broken strand, considerable reduction in the diameter of wires or excessive deformation of the rope. Reduction in the diameter of the rope wires due to wear or corrosion is permitted by not more than 30 %;

fibre ropes shall be replaced if there are broken yarns, rotten stains, considerable wear or deformation.

19.2.2.4.11 Signal masts.

19.2.2.4.11.1 At signal masts survey, the requirements of 2.4.3.9, Part II "Survey Schedule and Scope" shall be met.

19.2.2.4.12 Emergency outfit.

19.2.2.4.12.1 At emergency outfit survey, the requirements of 2.4.3.9, Part II "Survey Schedule and Scope" shall be met.

19.2.2.5 Fire protection.

19.2.2.5.1 At survey of fire protection items, the requirements of 2.4.4, Part II "Survey Schedule and Scope" shall be met.

19.2.2.5.2 The summarized scope of fire protection items surveys is given in Table 19.2.1.

19.2.2.5.3 The survey of machinery and electrical equipment forming part of the items specified in Table 19.2.1 shall be carried out in accordance with the requirements of 19.2.2.6 and 19.2.2.8.

19.2.2.5.4 The closing appliances shall be thoroughly examined and the spaces with closing appliances therein shall be tested for tightness by air pressure test exceeding the overpressure in the spaces by 10 %.

19.2.2.5.5 The system of water intake from the submersible sea water pumps shall be tested in operation at annual survey. At special and initial MODU/FOP surveys, the system shall be thoroughly examined with opening-up or dismantling, where necessary, and also tested in operation.

19.2.2.5.6 At survey of the system of water intake from submersible sea water pumps, the following shall be verified:

absence of damages to the piping and fittings;

condition of detachable joints, absence of water leakages;

availability and condition of devices for water protection and mechanical damages;

absence of fouling on the sea suctions of submersible pumps and inside the sea water storage tanks, condition of the filters fitted on the fire main.

19.2.2.5.7 Gas detection and alarm system shall be thoroughly examined and tested in operation.

19.2.2.5.8 During thorough examination of the gas detection and alarm system the following shall be verified:

compliance of the structure of detectors and devices installed in hazardous spaces and areas with the requirements of 2.11, Part X "Electrical Equipment" of the MODU/FOP Rules;

absence of damages to detectors and other components of the system.

When the system is tested in operation the following shall be verified:

actuation of visual and audible alarm at the appropriate control stations of MODU/FOP when the concentration of oil gases and vapour is in the range (20±10) % from the lower flammable limit and that of hydrogen sulphide is 3 mg/m3;

automatic change-over of fans in spaces monitored by the system to full capacity (not less than 20 air changes per hour) when the concentration of gas in air atmosphere reaches the limiting value;

automatic shutdown of the sampling devices or oil gas or vapour detectors operating on thermochemical principle when hydrogen sulphide concentration reaches 10 mg/m^3 with a signal being given to the engine control room;

operation of alarm to indicate failure in the gas detection and alarm system. Such test shall be effected through creation of the most realistic conditions for simulating actuation of the master devices.

19.2.2.5.9 For assessment of technical condition of the components of closing appliances in spaces maintained at an overpressure and the system of water intake from submersible sea water pumps, the provisions of Annex 2 to these Rules shall be met.

19.2.2.6 Machinery installation.

19.2.2.6.1 General provisions.

19.2.2.6.1.1 At special survey of MODU/FOP machinery installation, the requirements specified in the relevant Parts of these Rules and the Guidelines shall apply. The present Section includes additional requirements for survey of the MODU/FOP machinery installation components.

19.2.2.6.1.2 For non-self-propelled MODU/FOP, the applicable items of technical supervision, including auxiliary machinery, piping, heat exchangers and pressure vessels, etc. shall be surveyed in compliance with the requirements of this Section.

19.2.2.6.2 Internal combustion engines.

19.2.2.6.2.1 At special survey, the main engines shall be verified in accordance with 2.4.5, Part II "Survey Schedule and Scope".

In justified cases, main engines may be tested in operation without removal of MODU from the drilling site where it is possible to put the engines on loading and other modes by means of special loading devices (drilling equipment may be also used for this purpose).

Provision shall be made for effective means of protection against possible overloading. In cases when during mooring trials, the loading of main engines corresponding to running modes may be ensured (relieving propeller nozzles, electric propulsion, drilling equipment, etc.), testing of engines during sea trials may be omitted.

19.2.2.6.3 Shafting and propeller.

19.2.2.6.3.1 Survey of shafting and propellers shall be carried out at special survey in compliance with the requirements of 2.11, Part II "Survey Schedule and Scope", including when the shafting and propeller are used for dynamic positioning of MODU at a drilling site.

19.2.2.6.3.2 Notwithstanding the provisions of 2.11.6.4, Part II "Survey Schedule and Scope", in case when the main engines are tested by means of special loads (refer to 19.2.2.6.2.1), the shafting and propeller may be tested in operation when MODU moves to a new drilling site. At that, the requirements of these Rules concerning the dates of periodical surveys shall be complied with.

19.2.2.6.4 Auxiliary machinery.

19.2.2.6.4.1 The auxiliary machinery includes (refer also to 2.4.5.5, Part II "Survey Schedule and Scope"):

submersible sea water pumps;

MODU jacking system;

arrangements for lifting and lowering columns of sea water supply pipes and submersible sea water pumps;

fans of enclosed spaces maintained at an overpressure.

19.2.2.6.4.2 At survey of submersible sea water pumps and fans of enclosed spaces maintained at an overpressure, the requirements of 2.4.5.5.6, Part II "Survey Schedule and Scope" shall be met.

19.2.2.6.4.3 At MODU jacking system survey, the following items shall be examined:

pistons, rams, cylinders, shafts, bearings, pinions, overload protective device of pumps of variable capacity;

power cylinders, their pistons and rods, safety valves;

hydraulic cylinders, their pistons and rods for movement of catches;

limit switches.

19.2.2.6.4.4 At survey of the machinery forlifting and lowering columns of sea water supply pipes and submersible sea water pumps, the following items shall be examined:

shafts, bearings, pinions and gear wheels of winches, brakes, pistons and rams, cylinders, safety devices, limit switches.

19.2.2.6.4.5 All submersible pumps shall be tested in operation for their intended purpose.

19.2.2.6.4.6 The machinery for lifting and lowering columns, sea water supply pipes and submersible sea water pumps shall be tested in operation together with arrangements served by them. Simultaneously the time of the submersible pump starting in the system and operation of the column ultimate position alarm and protection system shall be verified.

19.2.2.6.4.7 MODU jacking systems shall be tested in operation simultaneously with the jacking arrangement (refer to 19.2.2.4.9.3) and hydraulic system (refer to 19.2.2.6.7).

19.2.2.6.5 Automated control and monitoring system.

19.2.2.6.5.1 At survey of automated control and monitoring systems of the MODU/FOP machinery installation, general provisions and basic recommendations on survey of ship's automation systems specified in 2.4.8, Part II "Survey Schedule and Scope" shall apply.

19.2.2.6.5.2 The summarized scope of periodical surveys of the automated control and monitoring systems is given in Table 19.2.1.

19.2.2.6.5.3 In addition to the scope of annual surveys, at each special survey, the following automation equipment shall be examined and tested in operation:

control actuators: all mechanical, hydraulic and pneumatic control actuators and their power sources shall be examined, tested including testing in operation, where necessary;

electrical equipment: the insulation resistance of the windings of the electric motors and coils of driving electromagnets (if any) shall be measured (having regard to different working voltages);

unattended installations: all remote automated control systems shall be subjected to mooring trials at reduced power on the propulsion machinery to verify proper performance of all automatic functions, alarms and protection systems.

19.2.2.6.6 Boilers, heat exchangers and pressure vessels.

19.2.2.6.6.1 At survey of boilers, heat exchangers and pressure vessels installed on MODU and FOP, the requirements of 2.4.5.6 and 2.4.5.7, Part II "Survey Schedule and Scope" shall be fully applied.

19.2.2.6.7 Systems and piping.

19.2.2.6.7.1 The present requirements apply to the following piping systems:

general purpose piping systems: bilge system, ballast system, ventilation and air conditioning system of accommodation and service spaces, air and overflow piping;

machinery systems: fuel oil system, lubricating oil system, cooling water system, compressed air system, exhaust gas system, feed water system, condensate system, steam and blow-off system, thermal oil system;

special systems: ventilation system of hazardous spaces, hydraulic MODU jacking system and hydraulic system for lifting and lowering columns of submersible sea water pumps, fuel system for helicopters.

19.2.2.6.7.2 Where there is an agreement on technical supervision of industrial piping, the survey procedure and schedule shall be determined in accordance with the requirements of a competent body.

19.2.2.6.7.3 At survey of MODU/FOP systems and piping listed in 19.2.2.6.7.1 and 19.2.2.6.7.2, the applicable requirements of 2.4.5.8, Part II "Survey Schedule and Scope" shall be met.

19.2.2.6.7.4 At survey of ventilation system of hazardous spaces, hydraulic MODU jacking system and hydraulic system for lifting and lowering columns of submersible sea water pumps, fuel system for helicopters the provisions of Table 19.2.1 shall be met.

19.2.2.6.7.4.1 At survey of hydraulic drives of MODU jacking system and system for lifting and lowering columns of submersible sea water pumps, safety valves, filters and hydraulic accumulators shall be examined. When the hydraulic drives of MODU jacking system are tested in operation, their operability shall be verified with one pump stopped.

19.2.2.6.7.4.2 At survey of sea water supply system of self-elevating MODU, the following items shall be examined: sea valves, filters, sea water storage tanks, pipes, fittings, devices to protect the inlet piping against environmental effects and mechanical damages, condition of heating system.

When testing the system in operation, the following shall be verified: operation of each pump, automatic starting of pumps when the water level in tanks drops and stopping thereof when the tanks are fully filled, as well as operation of the warning alarm system.

19.2.2.6.7.4.3 When the bilge system is tested in operation, the following shall be verified:

draining the compartments by each pump;

control of the pump drives and valves from local control station and from machinery control room;

operation of alarm to indicate position of valves and liquid level in bilge wells.

19.2.2.6.7.4.4 When the ballast system is tested in operation, the following shall be verified:

possibility of filling and draining the ballast tanks by each pump;

control of the pump drives and valves from local control station and from machinery control room;

operation of alarm to indicate position of valves and liquid level in bilge wells.

19.2.2.6.7.4.5 When the ventilation system of hazardous spaces is thoroughly examined, condition of ventilation ducts, fittings, fans, means of remote control and signalling, as well as gas analyzers shall be verified.

Operation of the fans shall be checked both in main and emergency modes.

19.2.2.7 Refrigerating plants.

19.2.2.7.1 At survey of MODU/FOP refrigerating plants, the requirements of Part IV "Surveys of Refrigerating Plants" shall be fully applied.

19.2.2.8 Electrical equipment.

19.2.2.8.1 In addition to the annual survey scope, the provisions of this Section shall be met at special survey.

19.2.2.8.2 The summarized scope of surveys of MODU/FOP electrical equipment is given in 2.4.7 of Table 2.1.1-1 of Part II "Survey Schedule and Scope" and in 19.2.1 of this Part.

19.2.2.8.3 Drilling electrical equipment is not subject to the Register technical supervision except for: certified safe-type (explosion-proof) electrical equipment located in hazardous spaces and areas. Large "dc" and "ac" electric motors for technological purpose shall be verified together with their circulating ventilation (cooling) systems. Subject to verification are also to be tripping devices for automatic shutdown of the motors in the event of failure of their ventilation systems (pressurized type); cables; protective devices, insulation monitoring and earthing devices.

However, where at survey it has been found that the operation or technical condition of that equipment may have an adverse effect on normal MODU/FOP operation or result in failure of the essential electrical equipment, as well as where the equipment endangers the human life or may cause fire or explosion, the RS surveyor shall set forward appropriate requirements.

19.2.2.8.4 The scope of opening-up (dismantlings) for examination and assessment of technical condition of the generators of the main source of electrical power, electrical equipment of electric propulsion plant, MODU jacking system, anchor machinery of MODU stabilizing system, ballast pumps of semi-submersible MODU, otheressential machinery may

be reduced in well-grounded cases, depending on the running time and attendance to that equipment.

The electric propulsion plant and/or electrical equipment of the dynamic positioning system shall be tested in operation during normal operation thereof, without forcing the system in special modes which differ from those necessary during the period concerned of MODU/FOP operation.

19.2.2.8.5 The generators forming part of the main source of electric power, emergency sources of electric power as well as other essential auxiliary equipment and machinery shall be tested in operation during normal operation thereof, without forcing them in special modes capable cause overloading and deenergization of MODU/FOP.

19.2.2.8.6 In addition to annual survey, particular attention shall be given to the following:

equipment and contact connections of the main switchboard, switchboards and distributing panels shall be verified, at that, particular attention shall be paid to the absence of overloading of individual circuits and feeders;

cable routing shall be verified with respect to their integrity and reliability of fastening;

during verification of the generators under load, their circuit breakers shall be also verified;

the whole electrical equipment and cables shall be verified for stability of their parameters (ageing etc.);

during measuring the insulation resistance of the electrical equipment and cables the results of actual and previous measurements shall be compared;

essential auxiliary electrical equipment, generators and motors shall be examined, the prime movers of the generators shall be opened up (accessible) for examination;

insulation resistance of each generator and motor shall be measured;

windings of main generators and motors of the propulsion plant shall be thoroughly examined to ensure that they are in dry and clean condition (after cleaning, where necessary). Particular attention shall be paid to the verification of the condition of all windings' leads of the electric machine stators and rotors.

19.2.2.8.7 During survey of cable transit seal systems of MODU and FOP contracted for construction on or after 1 July 2021, the requirements of 2.4.7.6.2 of Part II "Survey Schedule and Scope" shall be met.

19.2.3 Annual survey.

19.2.3.1 General provisions.

19.2.3.1.1 General provisions for annual survey are given in 2.2.1, Part II "Survey Schedule and Scope".

19.2.3.2 Hull.

19.2.3.2.1 General requirements for all types of units.

19.2.3.2.1.1 Scope of examinations at annual surveys is given in Table 19.2.1.

19.2.3.2.1.2 At each annual survey, at least the exposed parts of the hull, deck, deck house, structures attached to the deck, derrick substructure, including supporting structure, accessible internal spaces shall be generally examined and, if necessary, verified that they are in satisfactory condition.

19.2.3.2.1.3 Suspect Areas identified at previous surveys shall be examined. Thickness measurements shall be taken of the areas of substantial corrosion and the extent of thickness measurements shall be increased to determine areas of substantial corrosion. Provisions for the scope of thickness measurements of substantial corrosion areas are given in Table 19.2.2.3.1-6. These extended thickness measurements shall be carried out before the annual survey is credited as completed.

19.2.3.2.1.4 The following items shall be examined at least:

accessible hatchways, manholes and other openings;

coamings of companion hatches, companionways, ventilators and air pipes;

machinery and boiler casings and covers, companionways, and deckhouses openings;

skylights and scuttles together with dead covers, shell doors and similar openings in hull sides, ends, or in enclosed superstructures;

ventilators, tank ventilator pipes together with flame screens, and overboard discharges from enclosed spaces;

watertight bulkheads and end bulkheads of enclosed superstructures;

closing appliances for all the above, including hatch covers, doors, together with their respective securing devices, dogs, sill, coamings and supports;

freeing ports together with bars, shutters and hinges;

protective means for the crew: gangways and underdeck passages, guard rails on open decks and yards, bulwarks, as well as ship spaces: control stations, accommodation and service spaces, spaces for mud pumps and cement pumps, corridors, passages, doors and stairways;

closing appliances for passage of cathodic protection cables, closing appliances of manholes for inspection of submersible sea water pumps, closing appliances of openings for extra sea water discharge from sea water tank, as well as closing appliances of openings for lowering diving bell.

19.2.3.2.1.5 Ballast tanks shall be surveyed if it is required based on the results of special (refer to 19.2.2.3.1.11) or intermediate (refer to 19.2.4.2.1.6) surveys.

19.2.3.2.1.6 A verification for availability of MODU/FOP Operating Manual and for absence of alterations in structures which may result in reducing the MODU/FOP stability on seabed in working position shall be carried out.

19.2.3.2.2 Special requirements.

19.2.3.2.2.1 Drilling ships and barges (surface-type units).

In addition to the requirements of 19.2.3.2.1, the following items shall be examined:

hull and deck structure around the drilling well (moon-pool) and in vicinity of any other structural changes in section, slots, steps, or openings in the deck or hull and the back-up structure in way of structural elements or sponsons connecting to the hull.

19.2.3.2.2.2 Self-elevating units.

In addition to the requirements of 19.2.3.2.2, the following items shall be examined:

jack-house structures and attachments to upper hull or platform. Jacking or other elevating systems and leg guides, externally. Legs as accessible above the waterline. Plating and supporting structure in way of leg wells.

19.2.3.2.2.3 Column-stabilized units.

In addition to the requirements of 19.2.3.2.2, the following items shall be examined:

columns, diagonal and horizontal braces together with any other parts of the upper hull supporting structure as accessible above the waterline.

N o t e : At the 1st annual survey after construction, column-stabilized and self-elevating units are subject to examination of primary structural elements including, as deemed necessary by the RS surveyor, non-destructive testing. If the RS surveyor deems such survey to be necessary, the extent shall be agreed between the Register and the owner (operator) prior to commencement of the survey.

19.2.3.3 Equipment, arrangements and outfit.

19.2.3.3.1 At survey of closing appliances of openings in hull, superstructures and deckhouses, the requirements of 2.4.3.2 of Part II "Survey Schedule and Scope" and Table 19.2.1 of this Part shall be met.

19.2.3.3.2 The rudder and steering gear of drilling ships and barges (surface-type units) and selfpropelled units is subject to an annual survey to the extent prescribed by Table 2.1.1-1 and by 2.2.3.1 of Part II "Survey Schedule and Scope".

19.2.3.3.3 The anchor arrangement of MODU, FOP and surface-type units is subject to annual survey to the extent prescribed by Table 2.1.1-1, by 2.2.3.2 of Part II "Survey

Schedule and Scope" and by Table 19.2.1 of this Part. Anchor holding brackets, and chain cable guide device, fairleads, rollers and other guide devices are subject to external examination.

19.2.3.3.4 The summarized scope of positioning systems surveys at initial MODU/FOP surveys is given in Table 19.2.1.

19.2.3.3.5 At annual survey, the MODU/FOP mooring and boarding arrangements are subject to external examination.

19.2.3.3.6 Mooring arrangements of MODU/FOP and surface type units are subject to annual survey to the extent stipulated in Table 2.1.1-1 and in 2.2.3.3 of Part II "Survey Schedule and Scope".

19.2.3.3.7 The towing arrangement of MODU and surface-type units is subject to annual survey to the extent stipulated in Table 2.1.1-1 and in 2.2.3.4 of Part II "Survey Schedule and Scope", in Table 19.2.1 of this Part. The scope of surveys of arrangements for passing and taking in of the tow line forming part of the MODU towing arrangement at annual surveys is given in Table 19.2.1.

19.2.3.3.8 The summarized scope of survey of the jacking system for the hull of self-elevating MODU at the annual survey is given in Table 19.2.1. At annual survey of self-elevating MODU, the jacking system for the hull shall be examined in assembly. Examination may be carried out when self-elevating MODU moves to a new drilling site and when the unit is maintained at a drilling site.

19.2.3.3.9 The summarized scope of surveys of the arrangement for lifting and lowering columns of submersible sea water pumps at annual MODU surveys is given in Table 19.2.1. The arrangement for lifting and lowering columns of submersible sea water pumps shall be examined in assembly. Simultaneously, one of the independent arrangements shall be submitted for examination in the extreme top position.

19.2.3.4 Fire protection.

19.2.3.4.1 The survey scope and schedule of fire protection items at annual survey of MODU/FOP and surface-type units shall be determined in accordance with Section 3, Table 2.1.1-1 of Part II "Survey Schedule and Scope".

19.2.3.4.2 The survey scope of MODU/FOP specific fire protection items is given in Table 19.2.1. The fire protection items specific for MODU are as follows:

enclosed spaces maintained in overpressure and closing appliances therein — they are subject to annual survey by means of external examination;

the system of water intake from water submersible sea water pumps shall be tested in operation at annual survey;

gas detection and alarm system shall be tested in operation at annual survey;

helicopter facilities shall be checked by means of external examination.

19.2.3.5 Machinery installation.

19.2.3.5.1 The summarized scope of surveys of machinery installation items, at each annual survey of self-propelled MODU, surface-type units and FOP is given in Table 2.1.1-1 of Part II "Survey Schedule and Scope" and in Table 19.2.1 of this Part.

19.2.3.5.2 When the main engines are tested in operation at annual survey of MODU and drilling ships, the engine serviceability, operability of manoeuvring and starting devices, remote control devices, attached and driving mechanisms shall be verified. In such case, putting of the main engines into operating mode (speed, load and other parameters) may be omitted.

19.2.3.5.3 The scope of shafting and propeller surveys at annual survey is given in Table 2.1.1-1 of Part II "Survey Schedule and Scope"

19.2.3.5.4 For non-self-propelled MODU/FOP, the applicable items of technical supervision, including auxiliary machinery, piping, heat exchangers and pressure vessels, etc. shall be surveyed in accordance with the provisions of this Section.

19.2.3.5.5 Auxiliary machinery.

19.2.3.5.5.1 The auxiliary machinery of MODU, surface-type units and FOP also include submersible sea water pumps, MODU jacking system, arrangements for lifting and lowering columns of sea water supply pipes and submersible sea water pumps, fans of enclosed spaces maintained at an overpressure. The annual survey scope for above auxiliary machinery is given in Table 19.2.1.

19.2.3.5.5.2 At annual survey of the MODU jacking system, pumps of variable capacity shall be tested in operation for zero capacity, as well as, operability of the limit switches shall be tested manually.

Serviceability and operability of safety, protective and interlocking devices, remote (automated) control and alarm systems shall be verified as well.

19.2.3.5.5.3 At annual survey of the arrangement for lifting and lowering columns of sea water supply pipes and submersible sea water pumps, they may be tested in operation without load, i.e. without lifting and lowering columns. Operability of limit switches shall be tested manually.

19.2.3.5.6 Automated control and monitoring systems.

19.2.3.5.6.1 At annual survey of the automation equipment, in addition to verifications referred to in 2.2.8, Part II "Survey Schedule and Scope", all remote (automated) control systems shall be verified, including (refer to Table 19.2.1):

remote (automated) control system for the MODU jacking system by means of simulation which is carried out in accordance with the operating manual for the jacking arrangement. Meanwhile, respective signalling and indication on the main control panel of MODU shall be verified;

equipment for remote (automated) control of pumps and valves of the ballast and bilge system by means of several starts from the MODU main control panel. Simultaneously, respective signalling and indication shall be verified;

protection and alarm systems (monitoring of the MODU hull position, gas detection and alarm and ventilation of enclosed spaces maintained at an overpressure) by means of simulation of conditions for actuation of master instruments;

fire detection system in the unattended machinery spaces (the system shall be tested in operation) as well as the alarm system "Water in machinery space".

19.2.3.5.6.2 On all MODU, regardless of the automation mark in the class notation, the following items shall be verified in accordance with 19.2.3.5.5.1:

remote control systems for the MODU jacking system;

remote control systems for pumps and valves of the ballast and bilge system (except self-elevating MODU);

protection and alarm systems (monitoring of hull working position, gas detection and alarm and ventilation of enclosed spaces maintained at an overpressure);

remote control systems of valves fitted in strong watertight ventilation ducts of semi-submersible MODU pontoons.

19.2.3.5.6.3 Dynamic positioning systems and their automation equipment shall be verified under a separate programme agreed with the Register.

19.2.3.5.7 Boilers, heat exchangers and pressure vessels.

19.2.3.5.7.1 The summarized scope of annual surveys for boilers, heat exchangers and pressure vessels is given in Table 2.1.1-1 of Part II "Survey Schedule and Scope" and in 19.2.1 of this Part.

19.2.3.5.8 Systems and piping.

19.2.3.5.8.1 The summarized scope of systems and piping at annual survey of MODU, surface-type units and FOP is given in Table 2.1.1-1 and in 2.2.6 of Part II "Survey Schedule and Scope" as well as in Table 19.2.1 of this Part.

At annual survey of systems and piping, testing in operation shall be concurrent with similar testing of their service pumps, ventilators, hydromotors, heat exchangers and pressure vessels.

19.2.3.6 Refrigerating plants.

19.2.3.6.1 At survey of MODU/FOP refrigerating plants, the requirements and recommendations set out in Part IV "Surveys of Refrigerating Plants" shall be fully applied.

The survey scope and schedule for MODU/FOP refrigerating plants shall be the same as for the unclassed refrigerating plants.

19.2.3.7 Electrical equipment.

19.2.3.7.1 The summarized scope of annual survey of electrical equipment of MODU, surface-type units and FOP is given in Table 2.1.1-1 and in 2.2.7 of Part II "Survey Schedule and Scope" as well as in Table 19.2.1 of this Part.

19.2.3.7.2 Drilling electrical equipment is not subject to the Register technical supervision except for:

safe-type (explosion-proof) electrical equipment located in hazardous spaces and areas;

cables;

protective devices, insulation monitoring and earthing devices.

This electrical equipment is subject to annual survey. Where at survey it has been found that the operation or technical condition of that equipment endangers the human life or may cause fire or explosion, the equipment shall be recognized as not complying with the RS requirements until the defects are eliminated.

The following shall be checked at annual survey of the said equipment:

electrical equipment in all hazardous zones (only explosion-proof electrical equipment shall be installed in hazardous spaces and areas);

condition of all cable routing laid through hazardous spaces and areas;

condition of cable routing on the MODU movable parts (portals, towers, cranes, etc.) and their protective arrangements;

condition of means of protection and earthing devices of electrical equipment of drilling unit including the drilling derrick and its substructure;

availability and condition of earthing of drilling mud and cement grout manifold, as well as piping of pneumatic transport for powder materials and circulation system.

19.2.3.7.3 At annual survey of electric propulsion plant, it may be tested in operation without mooring and sea trials. However, the following shall be verified in all cases: possibility of electrical equipment control from all specified control stations; starting and reversing of electrical propulsion motors at a minimum rotational speed; operation of electrical equipment in all specified modes; operation of interlocking and alarm devices specified by the equipment.

19.2.3.7.4 MODU jacking system electrical machinery when MODU stands at a drilling site, may be tested in operation by means of verification of the electric motors under idle running and testing all programs of the electric drives by manual operation of limit switches.

At annual survey of electrical drives of the MODU jacking system, machinery and hydraulic jack electromagnet control system, the condition of electric motors, electromagnetic coils, control gear (switches, buttons, relays, etc.), sensors (limit switches), alarm and other devices shall be verified.

At annual survey, the electrical equipment, emergency sources of electric power, control gear and switchgear, as well as other electrical equipment shall be subjected to overall verification, including testing in operation.

The emergency source of electric power shall be tested in operation together with the equipment of automatic starting and monitoring of the emergency diesel-generator.

19.2.3.7.5 At annual survey of electric drives of the submersible pumps, the following shall be verified:

condition of bearing bushings in the upper and lower end brackets;

condition of steel bushings on the electric motor shaft;

condition of rubbing parts;

spacing between bearing bushings in end brackets and respective bushings on the shaft.

19.2.3.7.6 Examination of electrical equipment.

19.2.3.7.6.1 During examination of electrical equipment, the following shall be verified in addition to those specified in 2.2.7, Part II "Survey Schedule and Scope":

design and condition of all electrical equipment installed in hazardous spaces and areas. The RS surveyor shall be sure that the said spaces and areas contain no equipment of non-safe type, and that the safe-type electrical equipment and lighting and alarm fixtures shall comply with the safe type and are in running order;

condition of all cable routing laid through hazardous spaces and areas;

condition of cable routing on the MODU movable parts (portals, derricks, cranes, etc.) and their protective arrangements;

condition of protective devices and earthing devices of electrical equipment of drilling unit, including the drilling derrick and its substructure;

availability and condition of earthing of drilling mud and cement grout manifolds as well as piping of pneumatic transport for powdery materials and circulation system.

19.2.3.7.6.2 During examination of electrical drives of the MODU jacking system machinery and hydraulic jack electromagnet control system, the condition of electric motors, electromagnetic coils, control gear (switches, buttons, relays, etc.), sensors (limit switches), alarm and other devices shall be verified.

During examination, attention shall be paid to revealing damaged windings of coils, connecting conductors of the internal wiring, burnt and worn contacts, corrosion of current-carrying parts, etc.

19.2.3.7.6.3 During examination of electric drives of the submersible pumps, the following shall be verified:

condition of bearing bushings in the upper and lower end brackets;

condition of steel bushings on the electric motor shaft;

condition of rubbing parts;

spacing between bearing bushings in end brackets and respective bushings on the shaft. Such spacing shall not exceed the limits set by the operating manuals on these electric motors.

19.2.3.7.6.4 During examination of the alarm systems (strengthening of dangerous gas concentration, malfunctioning of the MODU jacking system, ventilation system of hazardous spaces, liquid level monitoring in tanks, bilges, etc., monitoring of air pressure in the blown-through electrical equipment), the following shall be verified: condition of alarm commutators, sensors, audible and visual alarm devices, all components comprising the alarm systems.

19.2.3.7.6.5 Cable transits through watertight and fire-resisting bulkheads and decks shall be examined.

For MODU and FOP contracted for construction on or after 1 July 2021, the RS surveyor shall review the Cable Transit Seal Systems Register in order to confirm that it has been properly maintained by the shipowner (responsible personnel of the crew).

Where there are records entered since the last annual survey of any repair, opening out/closing or alterations to the existing (installed) cable transits or installation of new cable transits, the satisfactory condition of their seal systems shall be confirmed by satisfactory results of review of these records and, if deemed necessary, examination of appropriate transits. The results of survey shall be recorded in the Cable Transit Seal Systems Register for each such cable transit.

19.2.3.7.7 Testing electrical equipment in operation.

19.2.3.7.7.1 When the electrical drives of MODU jacking system machinery are tested in operation, the following shall be verified:

starting and stopping of electric motors from the MODU main control station and local control stations;

operation of hydraulic jack electromagnet control system in all modes specified;

operation of the electrical drives under the load when the MODU jacking system is tested in operation;

operation of the alarm system to indicate running of the electrical drives and in case of failure of power supply;

position of the catches and functioning of the limit switches in the hydraulic jack control system.

19.2.3.7.7.2 When the electrical drives of machinery for lifting and lowering columns of sea water supply pipes and submersible sea water pumps are tested in operation, the following shall be verified:

operation of the electric motor of cargo winch at all speeds specified for lifting and lowering modes;

operation of the electric pusher in braking mode when the handle of the master controller is shifted from working to zero position;

operation of the limit switches;

operation of the alarm when limiting lifting and lowering positions are reached.

19.2.3.7.7.3 When the electrical drives of the submersible sea water pumps are tested in operation, the following shall be verified:

manual starting and stopping of the electric motors from the engine control room and local control stations;

automatic starting of the electric motors when the water level in the sea water storage tank drops and their stopping when the tank is fully filled;

operation of alarm when pressure drops in the pumps.

19.2.3.7.7.4 When the electric drives of fans for the enclosed spaces maintained at an overpressure are tested in operation, the following shall be verified:

automatic starting of standby electric fans when overpressure in the spaces drops;

operation of alarm of overpressure lacking in the monitored spaces.

19.2.3.7.7.5 When the emergency selective switch-off device for switching-off consumers is tested in operation, subject to verification shall be sequence of switching-off the following consumers:

electric motors of the fuel transfer pumps together with remotely controlled valves of the fuel oil system and electric motors of spaces fans;

electrical drives of non-essential consumers of non-safe type;

electrical drives of essential consumers of non-safe type;

all electrical drives of electric and electronic consumers of safe type;

switching-off of the main and emergency sources of electric power, except for the alarm system and battery supplied internal communication devices, as well as the emergency lighting of vital areas such as means of escape and evacuation routes of the platform.

The specific list of such equipment shall be defined by the MODU/FOP design.

Such verification shall be carried out from all control stations: from the engine control room, main control station and from the drilling foreman's position.

19.2.3.7.7.6 When alarm systems are tested in operation, the following shall be verified:

audibility of the sound sources (bells, howlers, sirens, etc.) from each sound source of the alarm system, actuation of a light (visual) signal at the main control station, engine control room and drilling foreman's position;

actuation of alarm at the main control station, engine control room and drilling foreman's position to indicate malfunctions of the ventilation system of hazardous spaces;

actuation of alarm at the main control station to indicate malfunctions of the MODU jacking system;

actuation of alarm at the engine control room and main control station to indicate rise of the sea water level in tanks, bilges, etc. and air pressure drop in the blown through electrical equipment;

actuation of alarm at the engine control room, main control station and drilling foreman's position to indicate increase of explosive gas concentration, as well as automatic switching-on of the ventilation of hazardous spaces to full capacity.

19.2.4 Intermediate survey.

19.2.4.1 Schedule.

19.2.4.1.1 The intermediate survey of MODU/FOP shall be carried out either at or between the second or third annual surveys. Those items, which are additional to the requirements of the annual survey, may be surveyed either at or between the second or third annual surveys.

19.2.4.2 Scope.

19.2.4.2.1 General provisions.

19.2.4.2.1.1 In addition to the scope of the annual survey, the scope of the intermediate survey shall include the requirements of 19.2.4.2.1.2 — 19.2.4.2.1.7.

19.2.4.2.1.2 Where applicable, intermediate survey shall include bottom survey in accordance with 19.2.5.

19.2.4.2.1.3 All tanks (compartments) for storage of drilling agent and holes for legs, columns of submersible sea water pump and drilling instrument with strengthenings shall be subject to examination.

19.2.4.2.1.4 External examination of self-elevating MODU legs and stability columns with bracings of semi-submersible and submersible MODU shall be carried out. During this survey, strips and welds between strips and legs shall be thoroughly examined, as well as welds of bracings in their junction with stability columns.

19.2.4.2.1.5 Drilling and cement pump rooms, chemical agent tanks for drilling and cement grout, tanks for oil collection at well trials, rooms for drilling agent cleaning systems and compressor station are subject to the survey from inside.

19.2.4.2.1.6 For MODU older than 5 years, all the ballast spaces mentioned in 19.2.4.2.1.6.1 — 19.2.4.2.1.6.3 as well as those selected by the RS surveyor shall be subjected to overall survey. If such survey reveals no visible structural defects, the survey may be limited to a verification that the corrosion prevention arrangements remain effective (in good condition).

19.2.4.2.1.6.1 Surface-type units: one forepeak or aft peak tank and at least two other representative ballast tanks between the peak bulkheads used primarily for water ballast.

19.2.4.2.1.6.2 Self-elevating units: representative ballast tanks or free-flooding compartments in mat or spud cans, if accessible, and at least two representative hull pre-load tanks.

19.2.4.2.1.6.3 Column stabilized units: representative ballast tanks in footings, lower hulls, or free-flooding compartments as accessible, and at least two ballast tanks in columns or upper hull, if applicable.

19.2.4.2.1.6.4 The RS surveyor shall examine the condition of the corrosion prevention system of ballast tanks. For ballast tanks where a hard protective coating is found in POOR condition and it is not renewed, where a soft or semihard coating has been applied, or where a hard protective coating has not been applied from the time of construction, the tanks in question shall be examined at annual intervals. In justified cases, as reasonably practicable, annual examinations may be carried out at a frequency determined by the RS surveyor. Thickness measurements shall be carried out as deemed necessary by the RS surveyor. Based on survey results, the RS surveyor makes a record on the necessity of ballast tanks to

be examined at annual intervals (or at other intervals) into the relevant RS reporting documents, the List of Ship's Status.

19.2.4.2.1.7 At the RS surveyor's discretion or in view of intensive corrosion, thickness measurements shall be carried out. If the measurements reveal substantial corrosion, the thickness measurement extent shall be increased in accordance with Table 19.2.2.3.1-5.

19.2.5 Survey of the outside of MODU/FOP bottom and related items.

19.2.5.1 General provisions.

19.2.5.1.1 At bottom survey of MODU and drilling ships the provisions of 2.5.3, Part II "Survey Schedule and Scope" shall be met. Intervals between the surveys may be reduced with due regard to the requirements of the operational documentation, the shipyard conclusion.

19.2.5.1.2 For MODU operating in salt water for less than six (6) months each year, as well as operating in fresh water or confined port waters, the survey interval may be extended for longer period, upon agreement with RHO, taking into account the provisions of 2.5.5.2, Part II "Survey Schedule and Scope", unless otherwise stated in the operational documentation and by the shipyard.

19.2.5.1.3 In addition to 19.2.5.1.2, the bottom survey of different types of MODU/FOP shall be carried out, as a rule, in a dry dock, on a shipway, on a slipway or by means of caissons. The bottom survey of self-elevating MODU shall be carried out with the unit hull elevated on the legs above water (provided the structures above water can be safely accessed); at that it is essential to take into account that at special survey an access shall be provided for thorough examination of external surfaces of well walls for legs. Bottom survey of legs of self-elevating MODU shall be carried out in a dry dock, on a shipway, on a slipway or by means of caissons.

19.2.5.1.4 The bottom survey of particular MODU, FOP types which operation assumes long-term or continuous positioning on the seabed, shall be carried out in accordance with the requirements of 2.5.5.3, Part II "Survey Schedule and Scope" with due regard to the requirements of 19.2.5.2.3.

19.2.5.1.5 Plans and procedures for bottom survey shall be worked out by the owner and submitted to RS for review. These shall include the following at least:

drawings or schemes or tables with identifying the areas to be surveyed;

survey conditions (cleaning scope of structures, spaces to be surveyed, ventilation, degassing, means of access, lighting, etc.);

non-destructive testing locations (including NDT methods) where necessary.

19.2.5.1.6 Notwithstanding the provisions of 19.2.5.1.3, upon the owner's written request, the in-water survey according to 19.2.5.2.3 may be accepted upon the RHO decision as an alternative to a bottom survey in dry dock. The decision shall be made based on the requirements of 2.5.1.8, Part II "Survey Schedule and Scope" and 19.2.5.1.7 of this Part.

19.2.5.1.7 Additional requirements for in-water survey of units.

19.2.5.1.7.1 For self-propelled units, means shall be provided for ascertaining that the seal assembly on oil lubricated bearings is intact and for verifying that the clearance or wear-down of the stern bearing is not excessive. For use of the wear-down gauges, up-to-date records of the base depths shall be maintained on board. Whenever the stainless-steel seal sleeve is renewed or machined, the base readings for the weardown gauge shall be re-established and noted in the RS records (Survey checklist as per form 6.1.01).

19.2.5.1.7.2 For self-propelled units with rudders, means and access shall be provided for determining the condition and clearance of the rudder bearings, and forverifying that all parts of the pintle and gudgeon assemblies are intact secure. This may require bolted access plates and a measuring arrangement.

19.2.5.1.7.3 Means shall be provided to enable the diver to confirm that the sea suction openings are clear. Hinged sea suction grids would facilitate this operation.

19.2.5.1.7.4 Means shall be provided to examine any sea valve.

19.2.5.2 Survey scope.

19.2.5.2.1 General provisions.

19.2.5.2.1.1 For bottom survey of units in a dry dock, applicable requirements of 2.5.7, Part II "Survey Schedule and Scope" shall be met.

19.2.5.2.2 Special provisions depending on unit type.

19.2.5.2.2.1 Self-elevating units.

19.2.5.2.2.1.1 In addition to 19.2.5.2.1.1, external surfaces of the upper hull or platform, footings, pontoons or lower hulls, underwater areas of columns, bracing and their connections, shall be examined.

19.2.5.2.2.1.2 At each prescribed bottom survey after special survey No. 2, the RS surveyor shall be satisfied with the condition of the internal structure of the mat or spud cans. Leg connections to mat and spud cans shall be examined. Non-destructive testing may be required of areas considered to be critical or found to be suspect by the RS surveyor.

19.2.5.2.2.2 Column-stabilized units.

19.2.5.2.2.2.1 In addition to 19.2.5.2.1.1, external surfaces of the upper hull or platform, footings, pontoons or lower hulls, underwater areas of columns, bracing and their connections, sea chests, and propulsion units as applicable, shall be examined. Non-destructive testing may be required of areas found to be suspect by the RS surveyor.

19.2.5.2.3 Requirements for in-water survey.

19.2.5.2.3.1 In accordance with 19.2.5.1.6, the in-water survey shall be carried out on the basis of applicable requirements of 2.5.8, Part II "Survey Schedule and Scope" of these Rules as well as provisions of Section 9, Part II "Carrying Out Classification Surveys of Ships" of the Guidelines and Annex 1 thereto.

19.2.5.2.3.2 The underwater areas of legs of self-elevating MODU, of structures of semi-submersible/submersible MODU and of FOP shall be surveyed by the RS surveyor with involvement of a service supplier carrying out in-water surveys, having Recognition Certificate issued by the Register and using modern techniques: underwater television, underwater photography, special equipment and instruments, remotely operated underwater vehicles (ROV) (refer to 4.14, Part I "General Provisions"). The possibility of obtaining permission for service suppliers recognized by ACS is specified in Section 7, Part I "General Provisions".

19.2.5.2.3.3 If during in-water survey the defects and damages which affect or, in the opinion of the surveyor, may affect the structural integrity and structural strength, watertight and/or weathertight integrity and safety of the unit in general, the unit shall be dry docked in order to perform necessary repair.

19.2.5.2.3.4 For thickness measurements, detection of fractures or other defects during in-water survey, special means for underwater non-destructive testing shall be applied.

19.2.5.2.3.5 Programme for the in-water survey shall be submitted for review in advance. Requirements for drawing up the programmes and terms of their submittal to the Register are specified in Section 9, Part II "Carrying Out Classification Surveys of Ships" of the Guidelines. The programme shall include at least the following:

scope of survey;

areas of underwater part to be cleaned (overall/spot);

non-destructive testing locations (including NDT methods);

methods to determine diver's/ROV location;

diver's/ROV location may be ensured by means of a permanent marking.

19.2.5.2.3.6 Conditions for survey.

19.2.5.2.3.6.1 To ensure an efficient examination, the visibility under water shall be clear enough and the hull below the waterline clean enough to enable a stable assessment of the shell, protruding parts and weld condition by the RS surveyor, diver and/or ROV operator.

19.2.5.2.3.6.2 Damaged areas shall be photographed and/or identified on video tape. Means shall be provided for location, orienting and identifying underwater surfaces in photographs or on video tapes.

Examination from inside, parameter measurements, marking and thickness measurements of such locations may be required as deemed necessary by the attending surveyor.

19.2.6 Technical supervision of MODU/FOP during repair and conversion.

19.2.6.1 During control of the scope and method of repair of items of the RS technical supervision, the RS surveyor shall follow the requirements of appropriate Parts of these Rules.

19.2.6.2 At surveys in connection with repair or conversion, a verification for availability of MODU/ FOP Operating Manual and for absence of alterations in structures which may result in reducing the MODU/FOP stability on seabed in working position shall be carried out.

19.2.6.3 Welding or other fabrication performed on steels of special characteristics or repairs or renewals of such steel or in areas adjacent to such steel shall be carried out in accordance with the procedures approved by the Register considering the special materials involved. Substitution of steels differing from those originally installed shall not be made without the RS approval. When considering suitable replacement materials by the Register, it is necessary to follow the Rules for Construction. In some cases, with RHO consent, it is allowed to apply provisions of IACS Recommendation No. 11 "Materials Selection Guideline for Mobile Offshore Drilling Units" when considering suitable replacement materials.

19.2.7 Specific surveys.

19.2.7.1 Survey during marine operations shall be referred to specific surveys of MODU/FOP. The reason for this is that MODU/FOP may be fully or partially (assembly modules) constructed thousands of miles away from further area of operation. The process of transportation of MODU/FOP or their elements to the site, transit or move to a new operational location, determination of safe conditions for these operations with justification of permissible risk is set forth in the Rules for Planning and Execution of Marine Operations. For marine operations, special programmes of survey reflecting the following issues shall be worked out and agreed by designer, constructor, owner with the Register:

assembly of the drilling unit afloat at the shipyard;

preparation of the site;

shipping of separate elements or drilling unit bodily to the site (operational location);

installation (positioning) of unit at site;

removal from site;

field move (or transit) to a new operational location (within or beyond assigned area of operation).

19.2.8 Marine operations (MODU transit).

Marine operation (MODU transit) shall be carried out in accordance with the approved Marine Operations Manual and the applicable requirements of Section 8, Part II "Carrying Out Classification Surveys of Ships" of the Guidelines.

19.2.9 MODU/FOP continuous survey system.

19.2.9.1 Requirements of 2.6, Part II "Survey Schedule and Scope" of these Rules fully apply to MODU/FOP.

19.2.10 Initial survey of MODU/FOP in service for classification purposes.

19.2.10.1 Initial survey of MODU/FOP in service is carried out within the scope established in the conditions of class transfer in accordance with Section 5 of Part II "Carrying Out Classification Surveys of Ships" of the Guidelines.

19.2.10.2 During the survey, provisions of this Chapter shall be met as well as the following requirements:

.1 during hull survey the wear of structural elements, damages, quality of welds and impermeability shall be checked. Assessment of technical condition of MODU/FOP hull

structures shall be carried out in accordance with permissible scantlings, the decision on the use of which shall be stated in the authorization for initial survey granted by RHO;

.2 composition of ship arrangements, equipment and outfit, their completeness of set, construction, arrangement and installation, as well as regulated characteristics (power, effectiveness, speed etc.) shall be verified for compliance with the requirements of the MODU/FOP Rules;

.3 arrangements, equipment and outfit of the drilling ships shall fully comply with the requirements of Part III "Equipment, Arrangements and Outfit" of the Rules for the Classification and Construction of Sea-Going Ships and special requirements of the MODU/FOP Rules.

19.2.10.3 Compliance with the requirements of the Rules for Construction and of these Rules, as well as due technical condition of closing appliances, steering gear, anchor, mooring and towing arrangement, jacking system of self-elevating MODU, arrangements for lifting and lowering of columns of submersible sea-water pump, crew protective means, MODU/FOP spaces and emergency outfit shall be verified during initial survey. Compliance with the requirements in respect of construction of masts and standing rigging and their strength shall be verified.

19.2.10.4 For MODU/FOP fire protection, the compliance with the requirements of the MODU/FOP Rules in respect of intended purpose of the objects shall be verified during initial survey giving due note of their structure and dimensions in respect of:

arrangement and equipment of spaces, fire extinguishing station and fire control station;

ensuring safe evacuation of people from accommodation and service spaces;

subdivision of accommodation spaces (accommodation modules) into main fire vertical zones and protection of spaces within fire zones;

application of relative fire-resistant and fire-retarding structures and closing appliances therein;

installation of self-closing fire doors, their remote control and automation systems;

spaces maintained in overpressure and closing appliances therein;

closing appliances for doors, shafts, air ducts, funnel annuluses, skylights and other openings in engine and pump rooms and their drives, as well as panelling and lining of ceilings;

mandatory provision for fire extinguishing systems;

technical characteristics and layout of machinery of systems, materials and structure of pipelines, their joints and fittings, pipe laying and securing;

for MODU/FOP operating at subzero temperatures, insulation or other means assuring non-freezing of fire mains on open decks;

drives of remote operation of system valves and machinery;

water intake from submersible pumps of sea water;

complete set of fire-fighting outfit, spares and tools;

fire detection and fire alarm systems and fire warning alarms;

instrumentation;

availability of general arrangement plans clearly showing location of control stations, arrangement of fire-resisting and fire-retarding divisions, fire extinguishing systems and fire detection and/alarm systems, means of access to compartments with indication of escape routes exhibited at the main fire control station, wheelhouse and in conspicuous positions in corridors and lobbies;

availability of the RS certificates (taking into account 4.5, Part I "General Provisions") and/or results of analysis of the used fire extinguishing media (foam generators and other media) and their quantity as per design calculations.

19.2.10.5 At initial survey of machinery installations and machinery, as well as of boilers, heat exchangers and pressure vessels, the following requirements shall be complied with: heat exchangers for drilling equipment are subject to the RS technical supervision.

Supervising system adopted by the competent bodies which is defined by the owner may be used for the periodical surveys of these apparatuses. Air collectors, air receivers constituting a part of the drilling equipment shall be submitted to the Register survey also after major repair or replacement.

19.2.10.6 The following items shall be checked on all MODU without regard whether an automation distinguishing mark is available:

MODU position mooring and dynamic positioning systems;

MODU hull remote jacking system;

remote control system for ballast pumps and valves of the draining system (except for self-elevating MODU);

protection and alarm system (control of the MODU position, gas detection and alarm, and ventilation of enclosed spaces maintained in overpressure).

19.2.10.7 At initial survey of MODU/FOP, the compliance of the composition of systems and pipelines as well as systems and pipelines of the machinery installation with fittings and instrumentation, their structure, arrangement and installation with the requirements of the MODU/FOP Rules shall be verified. Technical condition of systems and pipelines shall be checked during this survey.

The present requirements apply also to:

hydraulic drives of MODU hull jacking mechanisms;

hydraulic drives of mechanisms for lifting and lowering of columns of the sea water submersible pumps;

self-elevating MODU sea water supply system;

mud manifold, cement grout manifold and pneumatic transport system for the powdered materials;

ventilation system of enclosed spaces maintained in overpressure.

19.2.10.8 Compliance of the MODU/FOP electrical equipment, its structure, arrangement, installation, technical characteristics with the requirements of the MODU/FOP Rules shall be verified during initial survey and technical condition of the equipment shall be assessed.

19.2.10.9 Electrical drilling equipment is not subject to the Register technical supervision except for:

explosion-proof electrical equipment located in hazardous spaces and areas;

connected cables;

safety, insulation and earthing devices.

However, where at survey it has been found that the operation or technical condition of that electrical equipment may have an adverse effect on normal operation or result in failure of standard electrical equipment, as well as where the equipment endangers the human life or may cause fire or explosion, the Register shall set forward appropriate requirements.

19.2.11 RS documents.

19.2.11.1 During technical supervision of MODU and FOP in service and their classification, fulfillment of requirements of these Rules and required technical condition of MODU and FOP are stated in the RS documents issued in compliance with the requirements of Section 10, Part II "Carrying Out Classification Surveys of Ships" of the Guidelines.

20 SURVEY OF SHIPS OTHER THAN LIQUEFIED GAS CARRIERS UTILIZING GAS OR OTHER LOW FLASH POINT FUELS

20.1 GENERAL

20.1.1 These requirements apply to ships, other than liquefied gas carriers, which utilize gas or other low flash point fuels as a fuel for propulsion prime mover/auxiliary power generation arrangements and associated systems.

These survey requirements do not cover fire protection, fire-fighting installation, and personnel protection equipment and are supplementary to the survey extent of machinery and systems specified in Part II "Survey Schedule and Scope".

20.1.2 At survey of ships other than liquefied gas carriers utilizing gas or other low flash point fuels, the RS surveyor shall also be guided by below mentioned provisions considering IACS UI GF1 (Jan 2017):

the position of the sensors in the liquefied gas fuel tank shall be capable of being verified before commissioning;

at the first occasion of full loading after delivery and after each dry-docking, testing of high level alarms shall be conducted by raising the fuel liquid level in the liquefied gas fuel tank to the alarm point (refer to 15.4.2.3 of the IGF Code).

N o t e . The expression "each dry-docking" refers to:

the survey of the outside of the cargo ship's bottom required for the renewal of the Cargo Ship Safety Construction Certificate or the Cargo Ship Safety Certificate;

the survey of the outside of the passenger ship's bottom to be carried out every 60 months according to 2.5.4.1.3 of Part II "Survey Schedule and Scope" (e.g. refer to 5.10.1 and 5.10.2 of IMO resolution A.1140(31)).

20.2 ANNUAL SURVEY

20.2.1 At annual survey (in addition to the scope specified in 2.2, Part II "Survey Schedule and Scope"), the RS surveyor shall perform the following:

.1 examine the logbooks and operating records with regard to correct functioning of the gas detection systems, fuel supply/gas systems, etc. The hours per day of the gas reliquefaction plant, gas combustion unit (GCU), as applicable, the boil-off rate and nitrogen consumption (for membrane containment systems) shall be considered together with gas detection records;

.2 confirm the availability of the manufacturer instructions and manuals covering the operations, safety and maintenance requirements and occupational health safety relevant to fuel storage, fuel bunkering, and fuel supply and associated systems for the use of the fuel;

.3 confirm the satisfactory operating condition of gas detection and other leakage detection equipment in compartments containing fuel storage, fuel bunkering, and fuel supply equipment or components or associated systems, including indicators and alarms as well as verify that recalibration of the gas detection systems is performed in accordance with the manufacturers' recommendations;

.4 verify the satisfactory operation of of the control, monitoring and automatic shutdown systems as far as practicable of the fuel supply and bunkering systems;

.5 carry out operational testing, as far as practicable, of the shutdown of ESD (emergency shutdown) protected machinery spaces;

.6 examine piping, hoses, emergency shutdown valves, remote operating valves, relief valves, machinery and equipment for fuel storage, fuel bunkering, and fuel supply (including venting, compressing, refrigerating, liquefying, heating, cooling or otherwise handling the fuel), as far as practicable; examine means for inerting; confirm, as far as practicable, stopping of pumps and compressors upon emergency shutdown of the system;

.7 examine the ventilation system, including portable ventilating equipment, where fitted, for spaces containing fuel storage, fuel bunkering, and fuel supply units or components or associated systems, including air locks, pump rooms, compressor rooms, fuel preparation rooms, fuel valve rooms, control rooms and spaces containing gas burning installations. Where alarms, such as differential pressure and loss of pressure alarms, are fitted, these shall be operationally tested as far as practicable;

.8 examine portable and fixed drip trays and insulation for the protection of the ship's structure in the event of leakage;

.9 examine electrical equipment and bulkhead/deck penetrations including access openings in hazardous areas for continued suitability for their intended service and installation areas;

.10 examine electrical bonding in hazardous areas, including bonding straps where fitted;

.11 as regards the fuel storage, bunkering and supply systems the following shall be examined, so far as applicable, (insulation need not be removed, but any deterioration or evidence of dampness shall be investigated) namely, the fuel storage:

external examination of the storage tanks including secondary barrier if fitted and accessible;

general examination of the fuel storage hold place;

internal xamination of tank connection space;

external examination of tank and relief valves;

verification of satisfactory operation of tank monitoring system;

examination and testing of installed bilge alarms and means of drainage of the compartment;

testing of the remote and local closing of the installed main tank valve;

.12 as regards the fuel bunkering system, the following shall be performed: examination of bunkering stations and the fuel bunkering system;

verification of satisfactory operation of the fuel bunkering control, monitoring and shutdown systems;

.13 as regards the fuel supply system the following shall be performed (examination of the fuel supply system during working condition as far as practicable):

verification of satisfactory operation of the fuel supply system control, monitoring and shutdown systems;

testing of the remote and local closing of the master fuel valve for each engine compartment.

20.3 INTERMEDIATE SURVEY

20.3.1 At intermediate survey (in addition to the scope specified in 2.3, Part II "Survey Schedule and Scope"), the RS surveyor shall perform the following:

.1 the survey in the scope of annual survey specified in 20.2 of this Part;

.2 testing at random to confirm satisfactory operating condition of gas detectors, temperature sensors, pressure sensors, level indicators, and other equipment providing input to the fuel safety system;

.3 verification of proper response of the fuel safety system upon fault conditions.

20.4 SPECIAL SURVEY

20.4.1 The purpose of examinations, tests and checks carried out during special surveys shall be of sufficient extent to ensure that the fuel installations are in a satisfactory condition and are fit for their intended purpose for the new period of class of 5 years to be assigned, subject to proper maintenance and operation and to satisfactory results of periodical surveys being carried out at the due dates.

At special survey (in addition to the scope specified in 2.4, Part II "Survey Schedule and Scope"), the RS surveyor shall perform the following:

.1 the survey in the scope of annual survey specified in 20.2 of this Part;

.2 examination of all piping for fuel storage, fuel bunkering, and fuel supply such as venting, compressing, refrigerating, liquefying, heating storing, burning or otherwise handling the fuel and liquid nitrogen installations. Removal of insulation from the piping and opening for examination may be required by the RS surveyor, as well as, where deemed suspect, a hydraulic tests to 1,25 times the maximum allowable relief valve setting (MARVS) for the pipeline. After reassembly, the complete piping shall be tested for leaks. Where water cannot be tolerated and the piping cannot be dried prior to putting the system into service, the RS surveyor may accept alternative testing fluids or alternative means of testing;

.3 examination and operational testing of all emergency shut-down valves, check valves, block and bleed valves, master gas valves, remote operating valves, isolating valves for pressure relief valves in the fuel storage, fuel bunkering, and fuel supply piping systems. At the discretion of the RS surveyor, a random selection of valves shall be submitted in dismantled condition for examination;

.4 examination in opened condition, checking of adjustment and function testing of the pressure relief valves for the fuel storage tanks. If the tanks are equipped with relief valves with non-metallic membranes in the main or pilot valves, such non-metallic membranes shall be replaced;

.5 examination in opened condition, checking of adjustment and function testing of the pressure relief valves for the fuel supply and bunkering piping. Where a proper record of continuous overhaul and retesting of individually identifiable relief valves is maintained, consideration will be given by the RS surveyor to acceptance on the basis of opening, internal examination, and testing of a representative sampling of valves, including each size and type of liquefied gas or vapour relief valve in use, provided there is logbook evidence that the remaining valves have been overhauled and tested since crediting of the previous special survey;

.6 examination (in opened condition as necessary), testing and checking of adjustment of the pressure relief valves and/or vacuum relief valves, rupture disc and other pressure relief devices for interbarrier spaces and hold spaces (depending on the design);

.7 examination of fuel pumps, compressors, process pressure vessels, inert gas generators, heat exchangers and other components used in connection with fuel handling as required by 2.4, Part II "Survey Schedule and Scope";

.8 examination of electrical equipment to include the physical condition of electrical cables and supports intrinsically safe, explosion proof, or increased safety features of electrical equipment;

.9 functional testing of pressurized equipment and associated alarms;

.10 testing of systems for de-energizing electrical equipment which is not certified for use in hazardous areas;

.11 testing of electrical insulation resistance test of the circuits terminating in, or passing through, the hazardous zones and spaces;

.12 testing for confirmation of satisfactory operating condition of gas detectors, temperature sensors, pressure sensors, level indicators, and other equipment providing input to the fuel safety system; verification of proper response of the fuel safety system upon fault

conditions; calibration of pressure, temperature and level indicating equipment in accordance with the manufacturer's requirements;

.13 fuel storage tanks shall be examined in accordance with an approved survey plan.

Liquefied gas fuel storage tanks shall be examined based upon the following provisions of IACS Recommendation No. 148:

an inspection/survey plan for the liquefied gas fuel containment system shall be developed and approved by MA or RS upon its authorization, if any;

the inspection/survey plan shall identify aspects to be examined or validated during surveys throughout the liquefied gas fuel containment system's life and, in particular, any necessary in-service survey, maintenance and testing that was assumed when selecting liquefied gas fuel containment system design parameters;

the inspection/survey plan may include specific critical locations.

In developing the inspection/survey plan, the requirements for the survey of liquefied gas fuel containment systems shall comply with the requirements for surveys of gas carriers specified in Section 8, Part III "Additional Surveys of Ships Depending on their Purpose and Hull Material" of these Rules except as noted below:

.13.1 the tank insulation and tank support arrangements shall be visually examined. Non-destructive testing may be required by the RS surveyor if conditions raise doubt to the structural integrity;

.13.2 vacuum insulated independent fuel storage tanks of type C without access openings need not be examined internally. Where fitted, the vacuum monitoring system shall be examined and appropriate records shall be reviewed.

21 SURVEY OF SUPPLY VESSELS, STANDBY VESSELS, ANCHOR HANDLING VESSELS

21.1 Vessels with descriptive notation **Supply vessel (OS)** in the class notation shall meet the requirements of 13.1, Part XVII "Distinguishing Marks and Descriptive Notations in the Class Notation Specifying Structural and Operational Particulars of Ships" of the Rules for the Classification and Construction of Sea-Going Ships.

For retainment of the said descriptive notation the vessel shall be surveyed for compliance with the requirements of Part II "Survey Schedule and Scope" of these Rules and with the applicable requirements of 13.1, Part XVII "Distinguishing Marks and Descriptive Notations in the Class Notation Specifying Structural and Operational Particulars of Ships" of the Rules for the Classification and Construction of Sea-Going Ships.

21.2 Vessels with descriptive notation **Standby vessel** in the class notation shall meet the requirements of 13.2, Part XVII "Distinguishing Marks and Descriptive Notations in the Class Notation Specifying Structural and Operational Particulars of Ships" of the Rules for the Classification and Construction of Sea-Going Ships.

For retainment of the said descriptive notation, the vessel shall be surveyed for compliance with the requirements of Part II "Survey Schedule and Scope" of these Rules and with the applicable requirements of 13.2, Part XVII "Distinguishing Marks and Descriptive Notations in the Class Notation Specifying Structural and Operational Particulars of Ships" of the Rules for the Classification and Construction of Sea-Going Ships, including verification of the following:

.1 availability of slip-resistant deck coating or wooden lining in the access routes from rescue zones to survivors' accommodation and to helicopter winching area if provided;

.2 availability of protection against personnel injury (if required) on deck in way of the rescue zone;

.3 availability of a scrambling net in each rescue zone complying with the requirements of 13.2.3.9, Part XVII "Distinguishing Marks and Descriptive Notations in the Class Notation Specifying Structural and Operational Particulars of Ships" of the Rules for the Classification and Construction of Sea-Going Ships;

.4 availability of power assisted means capable of ensuring careful recovery of injured persons from the sea;

.5 availability of gears for towing of liferafts and rescue boats;

.6 availability of efficient storm shutters on the bidge front and side windows;

.7 functional testing of lighting, as well as avialability of means to control temperature and humidity in the treatment room for casualties, gaged in accordance with the manufacturer's instructions;

.8 availability of decontamination area equipped with a shower system arranged for cleaning survivors and crew before entering the superstructure;

.9 availability of a searchlight on each side and operated from the navigation bridge;

.10 functional testing of lighting (with power from the main and emergency source) provided for storage spaces for rescue boats and their launching arrangements, reception areas for survivors and rescue zones; overboard spaces in the rescue zone, survivors' reception areas, in areas of rescue boats launching; helicopter winching areas and routes to this area from survivors' reception areas.

21.3 Vessels with descriptive notation **Anchor handling vessel** in the class notation shall meet the requirements of 13.3, Part XVII "Distinguishing Marks and Descriptive Notations in the Class Notation Specifying Structural and Operational Particulars of Ships" of the Rules for the Classification and Construction of Sea-Going Ships.

For retainment of the said descriptive notation the vessel shall be surveyed for compliance with the requirements of Part II "Survey Schedule and Scope" of these Rules and with the applicable requirements of 13.3, Part XVII "Distinguishing Marks and Descriptive Notations in the Class Notation Specifying Structural and Operational Particulars of Ships" of the Rules for the Classification and Construction of Sea-Going Ships, except for bollard pull tests.

22 SURVEY OF FLOATING OFFSHORE OIL-AND-GAS PRODUCTION UNITS (FPU), FLOATING STORAGE AND OFFLOADING/FLOATING PRODUCTION STORAGE AND OFFLOADING UNITS (FSO/FPSO), SHIPS USED AS FLOATING OIL STORAGE UNITS (FSO/FPSO)

22.1 GENERAL

22.1.1 Application.

22.1.1.1 The requirements of this Section are applied by the Register during technical supervision of FPU in service covered by the FPU Rules, and of ships used as floating oil storage units (FSO/FPSO). At initial classification of FPU, the applicable requirements of the FPU Rules shall be complied with.

22.1.2 Definitions and explanations.

22.1.2.1 General definitions and explanations are specified in Part I "General Provisions" of these Rules. Specific terms and definitions relating to FPU are given in Part I "Classification" of the FPU Rules.

22.2 SURVEYS

22.2.1 General.

22.2.1.1 The following surveys for FPU in service are established by these Rules:

initial surveys during FPU construction and for the purpose of FPU acceptance into the RS class under the RS technical supervision. Requirements for the scope of initial surveys during construction are specified in Part I "Classification" of the FPU Rules. Requirements for the scope of initial surveys for the purpose of acceptance into the RS class are specified in Sections 5 and 6 of Part II "Carrying Out Classification Surveys of Ships" of the Guidelines;

periodical surveys including:

special, annual, bottom surveys as well as intermediate surveys and surveys carried out on the continuous survey system basis;

occasional surveys (in cases specified in Section 3, Part I "General Provisions" of these Rules).

22.2.1.2 Surveys of FPU and of ships used as floating oil storage units (FSO/FPSO) shall be carried out in accordance with Section 2 of the General Regulations for the Classification and Other Activity, applicable provisions of Section 19 of this Part of the Rules, as far as applicable and sufficient, unless otherwise specified.

22.2.1.3 In addition to the provision of 22.2.1.2, FPU and ships used as floating oil storage units (FSO/ FPSO) with descriptive notation **Gas carrier** in the class notation shall be surveyed in accordance with the provisions of Section 8 of the this Part of the Rules.

22.2.1.4 Where, upon decision of Flag State MA, the FPU (FSO/FPSO) shall be regulated by the requirements of IMO resolution MEPC.311(73), then regardless of the SOLAS 74/78 applicability to the FPU (FSO/FPSO) in question, such FPU shall be surveyed according to the enhanced survey programme in compliance with the ESP Code (based on regulation XI-1/2 of SOLAS-74/78) and, respectively, Sections 2 and/or 3 of this Part of the Rules, as applicable (except for 2.2 of the applicable Parts A and B of Annex B to the ESP Code in respect of dry dock survey. In accordance with the MA decision, the bottom survey of the ship may be carried out afloat instead of in dry dock).

Where MA does not require to perform the FPU survey according to the enhanced survey programme, the distinguishing mark (**ESP**) may be added, at the shipowner's discretion, to the character of classification of FPU (FSO/FPSO) after the descriptive notation. In this case, the scope of survey and thickness measurements of the FPU hull structures shall be agreed with the Register in each particular case.

In case of necessity the FPU to be engaged on any voyages for any purposes from its operational location, the FPU owner shall apply to the Register with a request to review the possibility of retainment of descriptive notation **FSO** or **FPSO** in the class notation, as well as the necessity of survey and determination of its scope.

22.2.1.5 Special surveys for class renewal shall be carried out at 5-year intervals. Prior to each special survey, the survey programme shall be developed and agreed with the Register, taking into account the technical condition of FPU structures and containing certain survey instructions.

22.2.1.6 Annual surveys for class confirmation shall be carried out within 3 months before and after each anniversary date of the Classification Certificate.

22.2.1.7 Bottom surveys of FPU and ships used as floating oil storage units (FSO/FPSO) shall be carried out in accordance with provisions of 2.5, Part II "Survey Schedule and Scope".

22.2.1.8 Where applicable (refer to 2.3, Part II "Survey Schedule and Scope"), intermediate surveys shall be carried out in lieu of the second or third annual survey.

22.2.1.9 In addition to Section 3 of Part I "General Provisions", occasional surveys of FPU or their individual elements shall be carried out: during repair and modernization; after each storm when a wave height at the FPU location has exceeded the design height.

22.2.2 Documentation on board.

22.2.1.2 Requirements of Section 6, Part I "General Provisions" fully apply to FPU. As regards the list of documentation the provisions of 19.2.1.3 of this Part of the Rules shall be met.

22.2.3 Procedures for thickness measurements, assessment of technical condition.

22.2.3.1 The requirements specified in 1.5 of this Part of the Rules fully apply to thickness measurements of FPU hull structures.

The assessment of FPU technical condition shall be carried out in accordance with Section 5, Part I "General Provisions", and applicable provisions of 19.2.2.3.1.12 of this Part and Annex 2 to these Rules.

23 SURVEY OF WOODEN STRUCTURES OF SHIPS AND OFFSHORE INSTALLATIONS

23.1 GENERAL

23.1.1 During survey of wooden structures of ships and offshore installations, the general applicable requirements of Part I "General Provisions" and 2.2, 2.4 of Part II "Survey Schedule and Scope" shall be met (e.g., those related to the conditions, schedule (periodicity) and dates of survey) taking into account the additions and amendments stipulated in this Section.

23.2 SURVEY

23.2.1 Annual survey.

23.2.1.1 Scope.

23.2.1.2.1 General.

In addition to the surveys required by 2.2 of Part II "Survey Schedule and Scope", components, equipment and outfit shall be surveyed to verify that they comply with the RS requirements.

23.2.1.2.2 Hull.

During annual survey, the following shall be examined: outer shell plating in accessible for examination areas; deck plating (especially in areas of openings), exposed parts of framing, especially in the extremities and in the areas that prone to decay.

Inner plating shall be cleared from mud and partly cut out, if considered necessary by The RS surveyor.

If during annual survey without survey of the outside of the ship's bottom (bottom survey), the RS surveyor reveals the defects of a hull that raise suspicions to hull underwater part condition, then the survey of the underwater part shall be carried out as deemed necessary by the RS surveyor.

Mandatory examination shall be carried out for all overboard sea-suctions valves, end bulkheads of superstructures, openings in hull sides and end bulkheads of superstructures and means for their closing, scuppers, scuttles and all other closing appliances of openings of the deck open parts.

23.2.2 Intermediate survey.

23.2.2.1 Periodicity.

The intermediate survey of self-propelled wooden ships shall be held at or between either the second or third annual survey.

23.2.2.2 Scope.

23.2.2.2.1 General.

The items of technical supervision to be surveyed additionally to the scope of the annual survey, may be surveyed either at or between the second or third annual survey.

23.2.2.2.2 Hull.

The scope of survey of hull structures at intermediate survey of a ship consists of the scope of the annual hull survey and the scope of additional hull surveys depending on the ship type, age.

In addition to the surveys required by 2.3 of Part II "Survey Schedule and Scope", components, equipment and outfit shall be surveyed to verify that they comply with the RS requirements.

23.2.3 Special survey.

23.2.3.1 Periodicity.

The procedure for assigning the period of class during special surveys shall comply with the applicable requirements listed in 2.4, Part II "Survey Schedule and Scope".

23.2.3.2 Scope.

23.2.3.2.1 General.

In addition to surveys performed in compliance with the applicable requirements of 2.4, Part II "Survey Schedule and Scope", the surveys specified in the present Section shall be carried out.

23.2.3.2.2 Hull.

23.2.3.2.2.1 During the first special survey the RS surveyor shall pay attention to:

technical condition of wooden framing members, plating and deck, especially in the areas easily prone to decay;

condition of locks, scarphs, incuts;

the solidity of sealed keys, cokes, nailing, doweling and bolting joints, as well as density of caulking.

23.2.3.2.2.1.2 Condition of wood is determined by hammering, blazing, cutting, spitting and/or drilling.

23.2.3.2.2.1.3 Bolting joint is checked by hammering on nuts and washers and, when appropriate, tightening. During examination it shall be ensured that all nuts are tight and there are spare threads for nut screwing up. Nuts shall be provided with washers of sufficient diameter and thickness.

23.2.3.2.2.1.4 Doweling joint is checked for trial knocking-out of two or three dowels, for the purpose of which the unshackled part of the dowel is drilled out.

23.2.3.2.2.1.5 Caulking is checked by the trial oakum crushing down.

23.2.3.2.2.1.6 The partial opening-up of metal side and bottom cladding (if any), and in special cases also of ice skin, shall be carried out to determine condition of the outer plating planks beneath. Detachable parts of flooring and inner plating shall be removed, and limber boards opened up.

23.2.3.2.2.1.7 For survey of frames, stem garboards and inner faces of planks of the outer plating, methods of non-destructive testing are used if necessary the drilling or other methods are used by decision of the Register. In case it turns out to be impossible to carry out the non-destructive testing, the RS surveyor may require that the opening-up, dismantling and etc. be carried out in order to determine the actual technical condition of the items of technical supervision. The RS surveyor may require to cut out the solid planks of outer plating in the area of alternating waterlines. On the one side one plank is cut out of the middle and the other adjacent to the stem, from the other side — one in the middle and the other adjacent to the sternframe.

In certain cased instead of outer plating planks cutting out, the cutting out of inner plating planks may be carried out.

Cutting out may be omitted for the ships without inner plating in case of free access to the framing and inner surface of the plating.

23.2.3.2.2.1.8 During deck survey, special attention shall be given to the places of rapid rot development in the areas of internal waterway girders, coamings, hatches, superstructures and deckhouses, under the deck mechanisms seatings and near the deck scuppers.

If necessary, the RS surveyor may require to remove the considerable part or even the whole ice plating, and to enlarge the cutting out of outer plating and to perform the cutting out of other elements.

23.2.3.2.2.1.9 It is necessary to examine all openings on the exposed decks parts, openings in sides and end bulkheads of superstructures, their closing appliances, covers and other parts of hatch covers.

23.2.3.2.2.1.10 Partial removal of solid ballast shall be carried out for the purpose of underneath structures survey.

23.2.3.2.2.1.11 To determine condition of parts of wooden structures (stern girders, framing members between inner and outer plating) covered by other girders, the random drilling in areas specified by the RS surveyor shall be carried out.

23.2.3.2.2.1.12 During survey, the RS surveyor shall pay attention to condition of the wood of framing members, plating and deck, especially in areas easily prone to decay (in places of high humidity, insufficient ventilation, near the inner girders of waterway, at hatch coamings, superstructures and deckhouses, under the deck mechanisms seatings in the area of side and deck scuppers), the condition of locks, scarphs, incuts, the solidity of sealed keys and cokes, nailing, doweling and bolting joints, as well as the density of caulking.

If areas of rotten girders revealed, in all cases the girder cutting out shall be carried out to the remaining sound wood.

23.2.3.2.2.2 During the second special survey, the instructions of 23.2.3.2.2.1 shall be carried out with due regard to the following:

.1 all metal side and bottom cladding shall be removed. Ice wooden plating is removed by separate strakes along the bottom, on the bow and in the area of wind and water strakes;

.2 in order to check the condition of frames, faucets, stem and sternposts, inner faces of outer plating, one belt of shell plating along the whole length of the ship in the area of wind and water strakes, separate planks of the bow and of the bottom in the area of ends of double floor timbers or first futtocks in case of simple floor timbers shall be cut out instead of cutting out two planks from each side; cutting out of planks of the outer shell plating in the bilge strakes at stern and stem shall be carried out in such a way as to ensure the inspection of foremost and sternmost girders;

.3 in order to check the condition of beams and especially their ends, as well as the bolster girders at the location of accommodation and service spaces, engine and boiler rooms, the deckhead and sides cladding in such places shall be removed as deemed necessary by the RS surveyor;

.4 during survey, the RS surveyor shall pay attention to condition of the upper or main deck, its bolts and nails, coamings, outer plating, especially in the areas of bolts passage, waterways, frames, breast hooks, sternframe, transoms, keelsons and keel.

23.2.3.2.2.3 During the third special survey, all the instructions of 23.2.3.2.2.1 and 23.2.3.2.2.2 shall be carried out and, additionally, the following shall be provided:

.1 for survey of frames, stem garboards, internal faces of outer plating, additionally separate planks of outer or inner plating and bellies, as well as deck inserts (hard tacks) shall be cut out between the top timbers, passing through the deck shall be cut out (as deemed necessary by the RS surveyor);

.2 for checking condition of beams, one belt of upper deck plating near the hatches shall be cut out.

If considerable hull rottenness or impairment by shipworms is revealed, the close-up survey of hull shall be carried out (refer to 23.2.3.2.2.4).

23.2.3.2.2.4 During the fourth and further special surveys, the close-up survey of the ship hull together with flaw detection shall be carried out. During this survey, condition of all hull members, joints shall be thoroughly examined taking into account the results and scope of previous surveys.

23.2.3.2.2.4.1 Scope of the fourth special survey shall be not less than the scope of the third special survey and shall be established depending on the hull technical condition determined by survey results, the scope and results of previous surveys, and repair of hull structures. Ice and other plating of the outer shell plating shall be removed completely. Solid ballast shall be removed completely.

23.2.3.2.2.4.2 For examination of the girders in the not easily accessible areas, the structures and equipment which make it difficult get access to the parts to be examined (independent tanks, cylinders, piping, etc.) shall be dismantled; the dismantling may be replaced by partial lifting or shifting if sufficient access is provided.

23.2.3.2.2.4.3 For survey of frames, outer edges of bilge and bottom strakes of outer plating inner edges girders as well as stem garboards, the outer plating strakes shall be cut out along the whole length of ship at the waterline level as well as opposite the bilge and bottom longitudinal girders.

23.2.3.2.2.4.4 During survey if necessary, the RS surveyor may require to perform additional cutting out of planks or strakes of outer or inner plating or and bellies.

23.2.3.2.2.4.5 For survey of beams, shelves, under deck girders, the deck belt adjacent to the internal waterway girder shall be cut out and if necessary, at the discretion of the RS surveyor, the waterway girders can be cut out.

23.2.3.2.2.4.6 In case of ceiling availability in the hold, it shall be removed completely near the sides.

23.2.3.2.2.4.7 For survey of deck girders and hatch coamings, the adjacent deck planks shall be cut out.

23.2.4 Survey of the outside of the ship's bottom (bottom survey).

23.2.4.1 Periodicity.

The ship's bottom shall be surveyed annually. Such surveys shall be carried out in conjunction with each periodical survey for confirmation or renewal of the Classification Certificate. The procedure for bottom surveys shall comply with the applicable requirements of 2.5, Part II "Survey Schedule and Scope".

23.2.4.2 Scope.

23.2.4.2.1 General.

In addition to surveys carried out in compliance with the requirements of 2.5, Part II “Survey Schedule and Scope" the following shall be fulfilled:

23.2.4.2.2 Hull.

23.2.4.2.2.1 Hull survey in addition to survey specified in 2.5, Part II "Survey Schedule and Scope" includes:

examination of outer plating of sides and bottom for the absence of rot, breaks, burrs, cracks and shearing, work cannels, splits, defects of fasteners and seals in the caulked seams, delamination of bonded parts of plating or fracture due to friction or grounding, as well as any other defects of hull lines (e.g. deformation, etc.);

stems, bar keel, bilge keels and other similar structures, propeller shaft brackets, beams and floors of hopper dredgers and hopper barges, sea chests and ice boxes as well as all welds shall also be examined. Special attention shall be given to connections between the bilge keels and other similar structures with shell plating;'

permissible defects are specified in the internal normative documents on repair intended for the use of RS surveyors.

23.2.5 Drawing up survey results.

23.2.5.1 Upon satisfactory completion of the surveys, the documents for the wooden ships shall be drawn up in accordance with Section 6, Part I "General Provisions" of the Guidelines.

24 SURVEY OF HULLS OF SHIPS AND FLOATING FACILITIES MADE OF ALUMINIUM ALLOYS

24.1 GENERAL

24.1.1 Definitions.

Definitions and explanations which are common to ships and offshore installations are given in Section 2, Part I "General Provisions" and 1.1, Part III "Additional Surveys of Ships Depending on their Purpose and Hull Material" of these Rules and in the Guidelines. Terms and definitions specific to dynamically supported craft and high-speed craft (HSC) are given in Part I "Classification" of the Rules for the Classification and Construction of High-Speed Craft (hereinafter referred to as the HSC Rules).

24.1.2 Application.

24.1.2.1 These requirements apply to all ships and offshore installations made of aluminium alloys regardless of their gross tonnage.

24.1.2.2 The scope of periodical surveys and intervals between them are given, depending on the ship's type:

for dynamically supported craft and HSC — in Table 3.4, Part I "Classification" of the HSC Rules which forms a summarized list of items of technical supervision related to classification;

for items of technical supervision not covered by the scope of application of the HSC Rules or not listed in Table 3.4, Part I "Classification" of the HSC Rules, the provisions of Table 2.1.1-1 and Table 2.1.1-2, Part II "Survey Schedule and Scope" of these Rules shall be considered.

The extent of particular examinations, measurements, testing, etc. is set forth as minimal and may be changed by the RS surveyor based on the valid instructions and specific conditions. In case the disputes regarding the determination of scope and schedule of surveys arise, the final decision shall be made on the basis of the requirements set forth in the relevant Sections of the Rules.

24.1.2.3 During survey of ship hulls made of aluminium alloys, the general requirements of Part I "General Provisions" shall be met as well as the requirements of 2.2, 2.4, 2.5.2, 2.5.4 and 2.5.6.5, Part II "Survey Schedule and Scope" of these Rules taking into account the additions and amendments stipulated in this Section.

24.1.2.4 These requirements apply to surveys of hull structures and piping systems, cofferdams, void spaces, fuel oil and lube oil tanks, fresh water tanks, ballast, grey and black water tanks (sanitary/domestic waste water and sewage holding tanks).

24.1.2.5 The requirements contain the minimum extent of examination, thickness measurements and compartment testing. The survey shall be extended when corrosion, fractures or other damages are found, and shall include additional close-up survey of details and structures in the area of detected damages.

24.1.3 Repair.

Applicable provisions of these Rules, the Guidelines as well as of the internal normative documents on repair intended for the use of the RS surveyors shall be considered during repair.

24.1.4 Thickness measurements and close-up survey.

In any kind of survey, i.e. special, intermediate, annual, survey of the outside of the ship's bottom or other surveys having the scope of the foregoing ones, the necessity and extent of thickness measurements shall be determined by the RS surveyor based on the results of thorough examination and, where applicable, close-up survey of hull

structures (refer to Table 24.2.2.2) and, where necessary, random thickness measurements in suspect areas carried out at the RS surveyor's discretion.

24.1.5 Assessment of technical condition of hull structures.

The relevant provisions of these Rules and Annex 2 thereto shall apply for the assessment of technical condition of hull structures.

24.2 SPECIAL SURVEY OF THE HULL

24.2.1 Periodicity.

The procedure for assigning period of class during special surveys shall comply with the applicable requirements listed in 2.4, Part II "Survey Schedule and Scope" of these Rules.

24.2.2 Scope.

24.2.2.1 General.

24.2.2.1.1 Scope of the special survey of the hull shall include the scope of annual survey, as well as examinations, tests and checks to ensure that the hull and the related piping, as defined in 24.2.2.1.3, are in satisfactory condition and fit for the intended purpose for a new period of class of 5 years to be assigned, subject to proper maintenance and operation and to periodical surveys being carried out at the due dates.

24.2.2.1.2 All hull structures and piping specified in Table 3.4 Part I "Classification" of the HSC Rules or Table 2.1.1-1, Part II "Survey Schedule and Scope" of these Rules, whichever is applicable, shall be examined, and this examination shall be supplemented by testing of compartments as required by Annex 10 to the Guidelines, to ensure that the structural integrity remains effective. The examination shall be sufficient to reveal corrosion, deformations, fractures, damages and other structural deterioration that may be present.

24.2.2.1.3 All piping systems within the above spaces shall be examined in accordance with Annex 26 to the Guidelines (where applicable) and operationally tested under working pressure to the RS attending surveyor's satisfaction to ensure that tightness and condition remain satisfactory.

24.2.2.2 Overall and close-up survey.

24.2.2.2.1 An overall survey of all ship's spaces shall be carried out at each special survey. The minimum requirements for close-up surveys at special survey are given in Table 24.2.2.2.

24.2.2.2.2 The RS surveyor may extend the close-up survey, as deemed necessary, taking into account maintenance of the spaces under survey, the condition of the corrosion prevention system and where spaces have structural arrangements or details, which have suffered defects in similar spaces or on similar ships according to available information.

Table 24.2.2.2

Minimum requirements to close-up survey at special hull surveys of ships made of aluminium alloys including dynamically supported craft and high-speed craft

Nos.	Item of close-up survey	Damages that are most likely to occur in service
1	Shell plating:	
	a) in way of steps;	*a)* shell plating fractures or leakage of riveted joints (if any);
	b) in way of hydrofoil installation fastening ;	*b)* deformation, fractures and/or ruptures in the shell plating;
	c) in way of wave impacts in the fore and midship regions of the ship;	*c)* deformation and/or fractures in the bottom and side shell plating;
	d) in way of vibration (aft end and location of the main and auxiliary engines);	*d)* fractures in the shell plating;
	e) at the ends of longitudinals and other intercoatal structures;	*e)* fractures in the shell plating;
	f) in way of intermittent welds of hull members attachment to the shell plating;	*f)* fractures in the shell plating;
	g) in areas of contact with wet wood, the environment and heterogeneous materials; in areas that are difficult to maintain	*g)* local corrosion of the shell plating
2	Intersections of longitudinal and transverse framing	Fractures in the welded joints of framing flanges with the extension to webs and shell plating
3	Openings for free passage of flanges of continuous stiffeners	Fractures in the corners of openings

Nos.	Item of close-up survey	Damages that are most likely to occur in service
4	Floating framing system	Fractures in the welds of transverse flanges (of frames, beams) attachment to the longitudinal flanges where the intersection of transverse and longitudinal framing is reinforced by one bracket
5	Welded joints of bottom and side parts of frame (the detail is reinforced by a bracket)	Fractures in the bottom part frame flange at the bracket end with the extension of fracture to the frame web
6	Non-reinforced welded joints of all-pressed hull panels stiffeners	Fractures in the butt joints of stiffener flanges and stiffener webs caused by difficult accessibility to welded joints due to low stiffener height (< 90 mm). It shall be noted that panels with angle profile stiffeners have the minimum lifetime and those with bulb profile stiffeners have the maximum lifetime
7	Welded joints of all-pressed hull panels and transverse watertight bulkheads	Possible fractures in the welded joints of panel stiffeners and bulkheads (at bracket ends)
8	Internal surfaces of inlet-outlet branch pipes and rudder trunk	Corrosion with further propagation up to through holes
9	Hydrofoil installation and stabilization controls (stanchions, flaps, etc.)	*a)* foil cavitation and cracks, stanchion cracks; *b)* damage of insulation components between the hydrofoil installation flanges and shell plating; securing bolt unfastening or break
10	Deck areas under WC bowls and different coatings	Local corrosion
11	Air-cushion flexible skirt	*a)* tuck-under and pulling of flexible skirt under the hull, that my cause an emergency situation; *b)* quick break of flexible skirt especially at tripping speed; *c)* damage to the flexible skirt attachment to the ship's hull; *d)* rupture of flexible skirt material due to force impact (impacts on obstacles and wave top), wear, as well as due to the effect of high-frequency vibration on unstressed sections of flexible skirt
12	Glued-welded joints	The following defects of spot welds may occur in the joint: lack of penetration, internal cracks, holes and cavities; interface expulsion, burns through, break or breakaway; rupture or crushing the edges with outer cracks at overlap edge; glueline defects
13	Riveted and glue-riveted joints	Refer to the internal normative documents on repair intended for the use of the RS surveyors
14	Transverse watertight bulkheads shall be subject to close-up survey at three levels: in the lower part; at mid-height of the bulkhead; upper part	—

24.2.3 Testing of compartments.

24.2.3.1 All hull compartments used for water ballast, fuel and other liquid cargoes shall be tested for tightness at special survey in compliance with the requirements of Annex 10 to the Guidelines.

24.2.3.2 The testing of compartment not intended for the carriage of liquids may be omitted, provided a satisfactory internal examination together with an examination of the upper parts is carried out.

24.2.3.3 During the tightness tests of hull structures the following preparation work shall be performed: surfaces of the structures subject to testing including welded and riveted joints shall be thoroughly cleaned and dried up.

24.3 ANNUAL SURVEY

24.3.1 Periodicity.

24.3.1.1 The procedure and scope of the annual surveys shall comply with the applicable requirements of 2.2, Part II "Survey Schedule and Scope" of these Rules.

24.3.2 Scope.

24.3.2.1 General.

24.3.2.1.1 The survey shall consist of an examination for the purpose of ensuring, as far as practicable, that the hull, weather decks, hull closures and systems piping are maintained in a satisfactory condition and should take into account the service history, condition and extent of the corrosion prevention system.

24.3.2.2 Hull survey.

24.3.2.2.1 When assigning the scope of close-up survey, requirements of Table 24.2.2.2 shall be considered, as far as reasonable and practicable.

24.3.2.2.2 Overall survey shall consist, as far as practicable, of external examination of the mentioned below structures, but not limited to:

.1 side and bottom shell plating in the underwater and above-water parts of the hull, including the areas of intense vibration, impact loads, hydrofoil installation location, stiffeners and foils attachments, propeller shaft brackets, angular propellers, rudder stock, foil pivot mechanism; shell plating in way of discharge valves, sea chests and hulls connecting catwalks; stem, transom, bilges, skegs, steps, niches;

.2 rigid air ducts and wells, landing pads, hull components intended for ship lifting and reinforcements for them;

.3 rigid structures supporting and dividing the air cushion, flexible skirt of the air cushion, attachment points and lifting mechanisms of the flexible skirt;

.4 hydrofoil installations and stabilization controls;

.5 deck plating enclosing buoyancy compartments and ensuring overall strength;

.6 spaces inside the hull: peaks, void spaces, cofferdams; fuel oil tanks, lube oil tanks, grey and black water tanks (sanitary/domestic waste water and sewage holding tanks); machinery spaces, passenger and public spaces, other spaces of the hull, superstructures and wheelhouses;

.7 structures inside hull compartments, including bottom, side and deck framing; transverse bulkheads;

.8 hatch and manhole covers of the open deck areas and inside the superstructures, outer doors of superstructures and wheelhouses, portholes, covers of ventilators bell-mouth and openings;

.9 systems piping within the above mentioned spaces shall be examined in accordance with Annex 26 to the Guidelines (where applicable) to confirm that their tightness and condition remain satisfactory.

24.4 INTERMEDIATE SURVEY

24.4.1 Periodicity.

24.4.1.1 The procedure and scope of the intermediate surveys shall comply with the applicable requirements of 2.3, Part II "Survey Schedule and Scope" of these Rules.

24.4.1.2 The scope of survey of hull structures at intermediate survey consists of the scope of the annual hull survey and the scope of additional hull surveys taking into account that for ships over 10 years of age, an additional examination for particular structures shall be carried out with access, opening-up or dismantling being provided, where necessary.

24.5 SURVEY OF THE OUTSIDE OF THE SHIP'S BOTTOM

24.5.1 At survey of the outside of the ship's bottom applicable requirements of 2.5, Part II "Survey Schedule and Scope" of these Rules shall be considered.

PART IV. SURVEYS OF REFRIGERATING PLANTS

1 GENERAL

1.1 Survey of refrigerating plant shall be carried out in compliance with the General Regulations for the Classification and Other Activity and with Part I "General Provisions" of these Rules.

1.2 The requirements of this Section apply to surveys of ship's stationary refrigerating plants with compressor-type refrigerating machines working with refrigerants of Groups I and II in compliance with Part XII "Refrigerating Plants" of the Rules for the Classification and Construction of Sea-Going Ships.

1.3 The following types of surveys apply to the technical supervision of refrigerating plants:

annual survey (refer to Section 3 of this Part);

special survey (refer to Section 4 of this Part);

continuous surveys when requested by the shipowner and agreed upon with the Register (refer to 1.7 of this Section);

occasional survey (refer to 1.4, 1.8 of this Section).

1.3.1 A refrigerating plant submitted to the Register for survey on board a ship for the first time is subject to initial survey (refer to Section 5 of this Part). The initial survey serves to ascertain that a refrigerating plant submitted for classification may be assigned a class or an unclassed refrigerating plant may be identified as complying with the Rules Construction.

1.3.2 Periodical surveys (special and annual) of a refrigerating plant shall be held concurrently with appropriate periodical surveys of the ship, provided the technical condition of the refrigerating plant does not require reduction of intervals between its surveys.

The Register does not provide the extension of terms of annual surveys of a refrigerating plant.

1.4 Occasional surveys are carried out when a refrigerating plant is submitted for survey in all cases other than initial and periodical surveys, including extension of terms of special survey of a refrigerating plant. The scope of survey and its procedure shall be specified by the Register depending on the purpose of the survey, age and technical condition of the refrigerating plant.

1.4.1 Occasional survey is held when requested by the shipowner or the underwriter to an extent necessary to fulfill the request.

1.4.2 Occasional survey of a refrigerating plant before loading or unloading of cargo shall be carried out upon special request of the shipowner.

1.4.3 A survey after the accident shall be carried out in case damage has been sustained by the entire refrigerating plant or by its separate items of machinery, arrangements or parts subject to the RS technical supervision. The survey shall be held in the port the ship is at the moment or in the first port that the ship calls at after an emergency occurrence with the refrigerating plant. The survey is held in order to reveal failures, to agree upon the scope of work required to eliminate the consequences of the emergency occurrence and to determine the possibility and conditions to maintain the class of the refrigerating plant or to permit further operation of an unclassed refrigerating plant.

1.5 Survey.

1.5.1 Survey to confirm and renew the Classification Certificate for the Refrigerating Plant shall be carried out in conformity with the applicable instructions in 2.2,1 and 2.4,1 of Part II "Survey Schedule and Scope". Survey of an unclassed refrigerating plant shall be carried out during survey of the machinery installation of the ship.

1.5.2 In cases, which do not give rise to any doubts, surveys of individual components of a refrigerating plant, which were surveyed within 15 months before the due date of special survey, may be taken into account.

1.6 Classification of refrigerating plants with a class of another classification society or with no class assigned.

1.6.1 The Register assigns a class to a refrigerating plant that has not been classed earlier, or which class assigned by ACS is no longer valid, provided the refrigerating plant is submitted for the initial survey. Register assigns or renews a class to the refrigerating plant by issuing a Classification Certificate for the Refrigerating Plant.

1.6.2 A refrigerating plant, which has an ACS valid class, may be accepted for classification on condition that the initial survey in the scope of annual survey for class maintenance will be carried out. Upon satisfactory results of the survey, the Register assigns a class to the refrigerating plant for a period of validity of the Classification Certificate available on board.

In the Classification Certificate for the refrigerating plants with **PRECOOLING** mark in class notation note shall be entered determining the conditions for the cargo cooling on board a ship.

1.6.3 For classification of a refrigerating plant holding an ACS class and a refrigerating plant, which class assigned by ACS is suspended, the following documentation shall be submitted:

.1 the latest Classification Certificate;

.2 the reports of surveyors to ACS on the surveys held, dating from the latest special survey for the class renewal;

.3 drawings, diagrams, instructions in accordance with the requirements of Section 5, Annex 1.1 to these Rules.

If the above documents are not submitted by the shipowner or are submitted partially, the shipowner shall ensure that all the required information is submitted to the Register at the initial survey.

1.6.4 For classification of a refrigerating plant with no assigned class, technical documentation to the extent agreed upon with the Register shall be submitted.

1.6.5 Initial survey of unclassified refrigerating plants with ACS valid class shall be carried out in the scope of annual survey. If a plant has no valid class, the surveyor may decide to extend the initial survey to the scope of special survey.

1.7 Continuous survey.

1.7.1 When requested by the shipowner and agreed upon with the Register, special surveys for class renewal or identification of a possibility to renew the right for safe operation of an unclassed refrigerating plant may be replaced by continuous survey of the refrigerating plant. In case of continuous survey, the scope of special survey for class renewal is subdivided into separate surveys held annually; the whole cycle of the survey shall be completed within a period, for which the class is assigned or renewed, or within the period between special surveys of an unclassed refrigerating plant.

1.8 Reinstatement of class.

1.8.1 In case of suspension, the class of a refrigerating plant may be reinstated, at the request of the shipowner, upon the satisfactory results of occasional survey carried out in the scope of special survey.

1.8.2 At the shipowner's request, the operation of each unclassed refrigerating plant, which has not been submitted for a prescribed periodical survey within more than three months upon its expiry date, may be permitted after an occasional survey in the scope of not less than overdued survey.

2 PROCEDURE AND SCOPE OF PERIODICAL SURVEYS

2.1 The summarized scope of periodical surveys and intervals between them are shown in Table 2.1.

2.2 The scope of separate examinations, measurements, checking and testing specified in Table 2.1 shall be decided by the surveyor to the Register based on the relevant chapters of this Part, having regard to the particular survey conditions, service, repairs and replacements made.

Table 2.1[1]

SCOPE OF PERIODICAL SURVEYS OF CLASSED AND UNCLASSED2 REFRIGERATING PLANTS

Symbols:

O — examination with provision of access, opening-up and dismantling where necessary;
C — external examination;
M — measurement of wear, clearances, isolation resistance, etc;
H — pressure testing (hydraulic, pneumatic);
P — operational testing of machinery, equipment and devices, their external examination;
E — verification of availability of current documents and/or brands to confirm testing of instruments by appropriate competent bodies, if they are subject thereto.

Nos.	Item to be surveyed	Survey of ship														
		1st annual	2nd annual	3rd annual	4th annual	1st special	1st annual	2nd annual	3rd annual	4th annual	2nd special	1st annual	2nd annual	3rd annual	4th annual	3rd special
		1	2	3	4	5	6	7	8	9	10	11	12	13	14	15
1	**Refrigerating plant (as a whole)**	P[3]	P[3]	P[3]	P[3]	OP[3,4]	P[3]	P[3]	P[3]	P[3]	OP[3,4]	P[3]	P[3]	P[3]	P[3]	OP[3,4]
	2 Refrigerating plant components															
2.1	Compressors:	P	P	P	P	OP	P	P	P	P	ON[5]P	P	P	P	P	ON[5]P
	.1 cylinders, pistons with connecting rods, bearings, shafts, screws, rotors, suction and pressure valves, crankcase, casing					O[6]M					O[6]M					O[6]M
	.2 safety valves[7]	P	P	P	P	P	P	P	P	P	P	P	P	P	P	P
2.2	Prime movers: for internal combustion engine or steam turbine, refer to 4.1.2 and 4.3.2 of Table 2.1.1-1 of Part II "Survey Schedule and Scope", for electric motor, refer to 7.6 of Table 2.1.1-1 of Part II "Survey Schedule and Scope"															
2.3	Pumps:															
	.1 refrigerant	P	P	P	P	OP	P	P	P	P	ON[5]P	P	P	P	P	ON[5]P
	.2 cooling medium	P	P	P	P	OP	P	P	P	P	ON[8]P	P	P	P	P	ON[8]P
	.3 cooling water	P	P	P	P	OP	P	P	P	P	ON[8]P	P	P	P	P	ON[8]P
2.4	Air cooler fans	P	P	P	P	OP	P	P	P	P	OP	P	P	P	P	OP
2.5	Heat exchangers, vessels, cooling devices, freezing apparatuses and ice machine under pressure of refrigerant:	P	P	P	P	OP	P	P	P	P	ON[5]P	P	P	P	P	ON[5]P

Nos.	Item to be surveyed	Survey of ship														
	.1 safety valves[7]	P	P	P	P	P	P	P	P	P	P	P	P	P	P	P
	.2 insulation					S					S					S
2.6	Heat exchangers, vessels, cooling devices, freezing apparatuses and ice machine under pressure of the cooling medium:	P	P	P	P	OP	P	P	P	P	ON[8]P	P	P	P	P	ON[8]P
	.1 insulation					C					C					C
2.7	Fittings and pipes for:															
	.1 refrigerant	P	P	P	P	OP	P	P	P	P	ON[5]P M[9]	P	P	P	P	ON[5]P M[9]
	.2 cooling medium	P	P	P	P	OP	P	P	P	P	ON[8]P	P	P	P	P	ON[8]P
	.3 cooling water	P	P	P	P	OP	P	P	P	P	ON[8]P	P	P	P	P	ON[8]P
	.4 bottom and side fittings	P	P	P	P	OP	P	P	OP	P	OPN	P	P	OP	P	OPN
	.5 pipe insulation					S					S					S
2.8	Instrumentation	E	E	E	E	E	E	E	E	E	E	E	E	E	E	E
2.9	Automation devices of refrigerating plant:															
	.1 automatic control for compressors, refrigerant systems, cooling medium and cooling water	P	P	P	P	P	P	P	P	P	P	P	P	P	P	P
	.2 automatic protection of compressors, refrigerant systems, cooling medium and cooling water	P	P	P	P	P	P	P	P	P	P	P	P	P	P	P
2.10	Spare parts	S	S	S	S	S	S	S	S	S	S	S	S	S	S	S
	3 Refrigerating machinery rooms and refrigerant store rooms, rooms containing process equipment under pressure of refrigerant															
3.1	Ventilation of spaces (including survey of ventilators)	P	P	P	P	OP	P	P	P	P	OP	P	P	P	P	OP
3.2	Hatch covers and doors (spaces for refrigerating machinery working with refrigerants of Group II and refrigerant store rooms), emergency exits	S	S	S	S	S	S	S	S	S	S	S	S	S	S	S
3.3	Water-screen system (if refrigerants of Group II are applied)	P	P	P	P	OP	P	P	P	P	OP	P	P	P	P	OP
3.4	Drying system of refrigerating machinery rooms		P			OP		P			OP		P			OP
	4 Refrigerated cargo spaces															
4.1	Insulation of refrigerated spaces, closures of hatch covers and doors	S	S	S	S	O[10]	S	S	S	S	O[10]	S	S	S	S	O[10]
4.2	Air ducts of refrigerating system	S	S	S	S	S	S	S	S	S	S	S	S	S	S	S
4.3	Ventilation of spaces with equipment under pressure of refrigerant	P	P	P	P	OP	P	P	P	P	OP	P	P	P	P	OP
4.4	A person in the space	P	P	P	P	P	P	P	P	P	P	P	P	P	P	P

Nos.	Item to be surveyed	Survey of ship

[1] After expiry of 15-year period specified in the Table, surveys shall be repeated in accordance with this Table; however, the extent of individual examinations, measurements, checking and tests shall be decided by the surveyor depending on the technical condition of items of supervision with due regard to the age of the refrigerating plant, repairs and replacements carried out.

[2] Unclassed refrigerating plants are subject to the technical supervision and survey in the scope specified in the following paragraphs of the present Table: 1 (only checking of integrity of the refrigerant system by portable leak detector); 2.1, 2.1.2, 2.3.1, 2.5, 2.5.1 and 2.7.1 (only pneumatic pressure tests); 2.7.4 and 2.8 (only in the refrigerant system); 2.9.2 (only compressors and refrigerant system), 3.1, 3.3, 3.4 and 4.3 (full scope).

[3] Includes checking of integrity of the refrigerant system by portable leak detector.

[4] P — refrigerating plant operational testing aiming to check developing and maintenance of specified temperatures in refrigerated spaces, freezing apparatuses and other cooling devices.

[5] H — pneumatic pressure tests at each special survey of the ship starting from the second special survey after construction, as well as drying and testing for hermiticity if refrigerant of Class I is used.

[6] O — screw-type compressors shall be surveyed at each special survey of the ship, starting from the second survey after compressor manufacture. On agreement with the RS Branch Office the due dates of compressor survey may be extended subject to the manufacturer's recommendations.

[7] P — checking of adjustment (refer to 3.4.2).

[8] H — hydraulic pressure tests at special surveys of the ship, starting from the second special survey.

[9] Starting from the second special survey.

[10] Together with the test for thermal properties of insulation structure if the insulation structure is altered, as well as after repair or replacement of insulation.

3 ANNUAL SURVEY

3.1 GENERAL

3.1.1 Annual survey for confirmation of class of a classed refrigerating plant or for confirmation of safe operation of an unclassed refrigerating plant shall ascertain that the refrigerating plant meets the requirementsfor the condition of class and the requirements for safe operation to a sufficient degree and to check the operation of machinery and arrangements covered by the requirements of the Rules.

3.1.2 Through records in ship log books on condition of the refrigerating plant and its components the surveyor gets the necessary information whether or not there have been any faults in the operation of the plant since the date of the previous survey and makes a decision, if necessary, on extending the minimum scope of the survey specified in 3.2 — 3.7, including opening-up and measurements for more detailed survey.

3.2 SURVEY OF MACHINERY

3.2.1 Refrigerant compressors, pumps, fans, their prime movers, automation devices shall be examined and operationally tested in compliance with Table 2.1.

Before operational testing, the surveyor shall verify, using ship's documents, satisfactory condition of insulation of electrical equipment; if there are any doubts, testing of insulation resistance in the presence of the surveyor shall be required. Special attention shall be given to verification of insulation resistance of the cabling, electric wiring and electrical equipment in dangerous and humid areas.

Safety valves of the compressors shall be checked for correct adjustment and tight fitting.

3.3 SURVEY OF HEAT EXCHANGERS AND OTHER APPARATUS, AND PRESSURE VESSELS AS WELL AS COOLING APPLIANCES

3.3.1 Heat exchangers and other apparatus, and pressure vessels as well as cooling appliances shall be externally examined concurrently with operational testing of the refrigerating plant in compliance with Table 2.1. The surveyor shall verify reliable attachment of the equipment, tightness of joints, absence of visible damages and intense vibration. The safety valves of refrigerant heat exchangers and pressure vessels working under refrigerant pressure shall be checked for correct adjustment and tight fitting (refer to 3.4.2).

3.4 SURVEY OF FITTINGS, PIPELINES AND AIR DUCTS

3.4.1 Fittings, pipes and air ducts shall be examined concurrently with operational testing of appropriate machinery and systems in compliance with Table 2.1. Fittings and pipes of the refrigerant, water cooling, cooling medium, air ducts, ventilation system of refrigerated spaces, freezing apparatuses and refrigerating machinery rooms, water-screen and drying systems as well as bilge systems shall be checked. The surveyor shall verify that fittings and joints are tight, there are no visible damages, and pipes are properly supported. The refrigerant side fittings shall be thoroughly examined at periodical dockings of the ship.

3.4.2 The adjustment of safety valves of pressure vessels and apparatus shall be normallycheckedata special test bench, using air or inert gas as a working medium.

Tight closing of a safety valve shall be checked again under water by raising a pressure up to the design pressure after valve closing upon its actuation.

3.4.3 The condition of piping insulation shall be checked for absence of physical damage and excessive moisture content.

3.5 SURVEY OF REFRIGERATING PLANT INSTRUMENTATION AND AUTOMATION DEVICES

3.5.1 Instrumentation shall be tested (calibrated) by competent organizations in accordance with Section 5, Part I "General Provisions" of the Guidelines. Instrument scales shall be sufficiently illuminated and limiting values of the parameters measured shall be displayed.

3.5.2 Adjustment parameters of regulating devices of the refrigerant, cooling medium and cooling water systems, automated protection of compressors shall be operationally tested in accordance with Table 2.1.

Audible alarms and visible indication at the control station upon operation of protection devices shall be checked concurrently.

For automated refrigerating plants with unattended operation, indication on machinery operation and stoppage, indication of temperature in refrigerated spaces andalarms in case of temperature variation from the specified value shall be additionally checked.

3.6 SURVEY OF REFRIGERATED SPACES, REFRIGERATING MACHINERY ROOM, REFRIGERANT STORE ROOMS, PROCESS EQUIPMENT ROOMS

3.6.1 External examination of the spaces shall be carried out. To be checked are emergency exits, absence of obstacles, which block escape routes, illumination of exits, opening and closing of doors and hatch covers from outside and inside of the spaces, start/stop of ventilation and water-screen systems from outside and inside, tightness of closing of doors, hatch covers, shutdown devices of ventilation ducts, drainage system of spaces, condition of spaces. Proper securing of non-stationary refrigerant cylinders for storm conditions shall be checked.

3.6.2 Condition of the refrigerated space insulation shall be checked: absence of physical damages, excessive moisture content. If insulation has been repaired between two surveys, the surveyor verifies workmanship and the materials used.

3.7 OPERATIONAL TESTING

3.7.1 Operational testing of classed refrigerating plants is carried out to verify that they are ready for safe operation and capable to maintain specified temperatures in refrigerated spaces, freezing apparatuses and other cooling arrangements, to provide the specified time of the freezing cycle in freezing apparatus, to ascertain that insulation of the refrigerated spaces is efficient.

3.7.2 Operational testing of unclassed refrigerating plants is carried out to ascertain that their components affecting safe navigation of the ship and safety of life at sea are safe in operation.

3.7.3 Operational testing of classed refrigerating plants is carried out with refrigerated spaces empty. The Register may test the plant under real conditions of a voyage in case of doubts regarding its capability to maintain the specified temperatures in refrigerated spaces or safety of its operation.

3.7.4 When a refrigerating plant is operationally tested, tightness of the refrigerant system shall be checked.

3.7.5 At annual survey of unclassed refrigerating plant operational testing and external examination of the following items shall be carried out:

compressors, heat exchangers and other apparatus, and vessels under refrigerant pressure, freezing and cooling apparatus with direct expansion of refrigerant together with fittings and refrigerant piping, as well as automatic safety devices;

water-screen systems of spaces of ammonia refrigerating machinery;

remote switching-offof the main lighting of spaces of ammonia refrigerating machinery and electrical equipment of ammonia refrigerating;

bilge systems of ammonia refrigerating machinery rooms;

emergency remote switching-on of the ventilation and reserve lighting of spaces of ammonia refrigerating machinery;

refrigerant emergency drain system (drain capacity of common piping shall be tested by means of compressed air or steam, and the tightness of emergency refrigerant drain valve shall be verified).

3.7.6 At annual surveys a classed refrigerating plant shall be operationally tested. The duration of the plant operation shall be specified by the surveyor. Upon completion of working mode, the removal of snow coat (defrosting) of cooling arrangements shall be checked. In addition to 3.7.5, all cooling devices, prime movers of machinery, cooling water and cooling medium systems, ventilation system of refrigerated spaces, remote temperature indication and alarms for refrigerated spaces, automatic regulation devices of the refrigerant, cooling water and cooling medium systems shall be operationally tested. Main electrical power sources for the refrigerating plant, warning signal "Man-in-enclosed space!" shall be also operationally tested.

3.8 TESTS

3.8.1 At annual surveys the tightness of refrigerant system of the whole refrigerating plant is verified by leak detector. If necessary, hydraulic and pneumatic tests of both individual items of machinery, pressure vessels, apparatus or parts of the refrigerating plant or systems and the plant as a whole as described in 4.8 shall be carried out. Such tests shall be conducted during repairs, which require testing for strength and tightness, and when substantial wear and leaks in joints and fittings of the refrigerant, cooling water and cooling medium systems are found, as deemed necessary by the surveyor.

4 SPECIAL SURVEY

4.1 GENERAL

4.1.1 Special survey for class renewal or for confirmation of safety of an unclassed refrigerating plant is aimed to ascertain that technical condition of the refrigerating plant meets the requirements of theRules for Construction and additional requirements of the Register.

4.1.2 At special survey of a refrigerating plant all surveys described in Section 3 and additional surveys, examinations and tests, the scope of which is given in 4.2 — 4.6 shall be carried out. The reduction of opening-up, examinations and measurements against those described in 4.2 — 4.6 may be allowed by the surveyor on agreement with the PS Branch Office. Such reduction may be justified by documented traceability of maintenance, opening-up, examinations and measurements as prescribed by the manufacturers and their satisfactory results. The surveyor shall verify that entries made in the documents are consistent with the condition of the items as the survey results show.

4.1.3 Upon completion of close-up survey of items of the refrigerating plant as described in 4.2 — 4.6 the entire plant is subject to a vacuum-tight test for tightness and integrity in compliance with 4.8.4.

4.2 SURVEY OF MACHINERY

4.2.1 At survey refrigerant compressor parts with necessary opening-up and dismantling to verify their condition and wear as described in Table 2.1 shall be examined. After re-assembly compressors shall be pneumatically tested for tightness. The list of the parts to be examined and frequency of examinations are indicated in 2.1 of Table 2.1. For the requirements for pneumatic tests, refer to 4.8.4.

4.2.2 Parts of cooling medium and cooling water pumps shall be examined with necessary opening-up and dismantling, as well as fan parts shall be examined.

4.2.3 Prime movers of compressors, pumps, fans shallbe examined, forwhichpurpose access thereto shall be pro-vided by means of necessary opening-up and dismantling.

4.2.4 Machinery and generators supplying electrical energy to the refrigerating plant shall be examined, for which purpose access thereto shall be provided by means of necessary opening-up and dismantling.

4.2.5 At close-up surveys referred to in 4.2.1 — 4.2.3 the applicable provisions of the relevant sections of these Rules shall be considered.

4.2.6 Recommendations on technical supervision during repair of refrigerating plants are given in the internal normative documents on repair intended for the use of RS surveyors.

4.3 SURVEY OF REFRIGERANT HEAT EXCHANGERS AND PRESSURE VESSELS, AND COOLING APPLIANCES

4.3.1 Refrigerant heat exchangers and pressure vessels shall be internally examined (as far as practicable) and pneumatically tested in compliance with Table 2.1.

Freezing and other apparatus with refrigerant direct expansion are subject to pneumatic testing.

The frequency of examinations and tests is given in Table 2.1, test requirements are described in 4.8.

4.3.2 Examination of insulated vessels and apparatus and residual thickness measurements of their hulls shall, ifnecessary, be performed with particular lengths of insulation being removed at the surveyor's direction.

4.4 SURVEY OF FITTINGS, PIPELINES AND AIR DUCTS

4.4.1 Fittings and piping systems of the refrigerant, cooling water, cooling medium, water screens, ducts of air coolers, ventilation of refrigerated spaces, freezing apparatuses and refrigerating machinery rooms shall be thoroughly examined in accordance with Table 2.1 of this Part. Refrigerant piping systems shall be pneumatically tested and that of cooling medium shall be hydraulically tested for tightness in operation conditions. The frequency of thorough examinations and tests is given in Table 2.1 of this Part; the tests are described in Section 12, Part XII "Refrigerating Plants" of the Rules for the Classification and Construction of Sea-Going Ships. During survey, condition of air duct and piping insulation (refer also to 3.4.1 of this Part) shall be checked, air tightness of air ducts in non-refrigerated spaces shall be checked. Insulated lengths of air pipes shall be examined with the insulation removed, if they were installed more than 10 years ago.

4.5 SURVEY OF INSTRUMENTATION, ALARM AND WARNING SYSTEMS, AND REFRIGERATING PLANT AUTOMATION DEVICES

4.5.1 The scope of survey is given in 3.5; the frequency of survey is shown in Table 2.1.

4.6 SURVEY OF REFRIGERATED SPACES AND THEIR INSULATION, REFRIGERATING MACHINERY ROOM, REFRIGERANT STORE ROOMS, PROCESS EQUIPMENT ROOMS

4.6.1 Survey of the above spaces shall be carried out in compliance with Table 2.1.

When ammonia refrigerating machinery rooms and ammonia storerooms are examined, attention shall be given to detection of gastightness failures. For close-up survey of the insulation-refrigerated cargo spaces shall be thoroughly cleaned and ventilated, all detachable boards shall be removed.

During survey, the condition of the insulation shall be checked to ensure that it is not damaged or its moisture content is not too high.

Where necessary, the insulation shall be locally opened up or samples shall be cut by drilling them out.

Tightness of closure of hatches, doors and ventilation ducts shall be checked.

4.7 OPERATIONAL TESTING

4.7.1 The scope of operational testing of an unclassed refrigerating plant at special survey shall be in accordance with 3.7.5.

4.7.2 At special surveys of a classed refrigerating plant operational testing of the plant shall be carried out to check development and maintenance of the specified temperatures in refrigerated spaces, freezing apparatuses chambers and other cooling devices.

During testing, the temperature in the refrigerated spaces shall be lowered to the lowest specified temperature and maintained for 16 h. In the course of maintenance of this temperature, operation of standby refrigerating machines, compressors and pumps shall be checked; standby equipment shall operate for 6 h instead of the main equipment.

Operation of automatic control and regulating devices as well as local (manual) control, if fitted, shall be tested.

The accuracy of the specified temperature maintenance in refrigerated cargo spaces (including a temperature difference in various points of the cargo space volume) shall be in line with technical requirements for the refrigerating plant depending on particular types of the cargoes carried. Where there are no such requirements the accuracy of the specified temperature maintenance shall be within ±2 °C.

In case of change of insulation construction as well as after repair or replacement of insulation upon completion of operational testing, the refrigerating plant shall be stopped and a temperature rise inside refrigerated spaces, ambient air, seawater temperatures, and also temperatures in the spaces adjacent to the refrigerated spaces shall be measured. The measurements shall be carried out every hour during 12 h.

The time for reaching the lowest specified air temperatures in cooled cargo spaces shall be determined, with measuring the mean air and sea water temperatures.

4.8 TESTS

4.8.1 Tests of the refrigerating plant and its components shall be carried out in the presence of the surveyor.

4.8.2 The necessity of appropriate periodical tests is specified in Sections 3 — 5.

Refrigerating plant and its components are subject to unscheduled tests in case of repairs, opening-up or dismantling as well as after re-assembly.

4.8.3 The requirements for pneumatic, hydraulic and vacuum-tight tests are given in Section 11 of Part XII "Refrigerating Plants" of the Rules for the Classification and Construction of Sea-Going Ships.

4.8.4 In carrying out pneumatic test, the following instructions shall be considered:

.1 pneumatic tests shall be carried out by dry air, carbon dioxide or nitrogen;

.2 in the course of the tests the entire system during 18 h shall be kept under pressure, which shall be recorded every hour. A pressure drop during the first six hours shall not exceed 2 %. During remaining 12 h the pressure shall not change, provided the ambient temperature remains constant; otherwise a recalculation shall be made (refer to 2.5.5.11 of Part II "Carrying Out Classification Surveys of Ships" of the Guidelines);

.3 only for refrigerants of Group I after testing the system shall be drained. Special attention shall be given to drainage of piping, apparatus and refrigerant cylinders. The refrigerant system shall be also subjected to a vacuum-tight test (refer to 2.5.5.14 of Part II "Carrying Out Classification Surveys of Ships" of the Guidelines);

.4 after the system has been filled with a refrigerant all joints and fittings shall be tested for tightness.

5 INITIAL SURVEY

5.1 The scope of initial survey is decided by the Register in each particular case in accordance with Table 2.1 as for an appropriate special survey depending on the age of ship and technical condition of the refrigerating plant and its machinery; devices and components (refer to 1.6.2).

5.2 In addition to the surveys prescribed by Table 2.1 of this Part, at initial survey of the refrigerating plant compliance of the design, arrangement and installation of machinery, apparatus, pressure vessels and other items of technical supervision, equipment of refrigerating machinery rooms, refrigerant store rooms, process requipment rooms and electrical equipment with the requirements of the Rules for Construction shall be verified.

For classed refrigerating plants, capacity and cycle duration in the freezing apparatus as well as compliance of the equipment and insulation of refrigerated spaces with the requirements of the Rules for Construction shall be verified.

The technical condition of items of supervision is assessed based on the survey results, having regard to permissible wear limits specified by the manufacturer of the items, assessment of the condition at the previous survey and provisions of Section 6 of this Part.

5.3 At initial survey, the shipowner shall submit technical documentation within the scope referred to in 1.6.3 and 1.6.4.

5.4 At initial survey of classed refrigerating plant, the shipowner shall ensure that the tests of the refrigerating plant in operation are carried out to ensure maintenance of the lowest specified temperatures in the refrigerated spaces at ambient temperatures corresponding to the design conditions for the particular area of navigation. During tests the general working capacity of elements used according to their direct purpose, the actual duration of cycle of reaching specification temperatures, heat transfer factor of the refrigerated space insulation shall be checked.

Where thermal tests of the refrigerating plant are carried out at air and sea water temperatures lower than those corresponding to the design conditions, maintenance of the lowest specified temperatures under design condition shall be confirmed by the shipowner by means of a calculation made according to a procedure approved by the Register, based on the results of the tests. Maintenance of the specified temperatures under actual operating conditions in the particular area of navigation is verifired by the surveyor during the voyage.

Such verification may be made by the surveyor, using refrigerating plant log book records not later than at the first annual survey.

At initial survey of classed refrigerating plant of fishing vessels, in addition to the above tests, capability of the plant to develop the specified temperatures in freezing apparatuses shall be checked, capacity and fish product freezing cycle in freezing apparatus shall be determined.

The scope of operational testing at initial survey of the refrigerating plant shall be generally not less than that at special survey of classed refrigerating plant (refer to 4.7.2), except for the cases indicated in 1.6.2.

6 ASSESSMENT OF THE TECHNICAL CONDITION

6.1 General requirements for assessment of the technical condition are given in Section 5, Part I "General Provisions".

6.2 The assessment of the technical condition of the refrigerating plant is based on the results of the survey, using records of the previous surveys and information on in-service wear, damages and failures, repairs and replacements indicated in the ship's documents (maintenance records, ship protocols, manchinery logs, etc.).

6.3 Permissible limits of wear, damages and failures for structures, assemblies and components shall be determined in accordancewith the manufacturer's instructions and data records as well as provisions of this Section.

Vibration of machinery and heat exchangers based on measurement results is assessed according to vibration standards given in the Rules for Construction.

6.4 In assessing the technical condition of machinery and electrical equipment items, which are parts of the refrigerating plant and not covered by this Section, the relevant provisions of 2.4.5, Part II "Survey Schedule and Scope" shall be considered.

6.5 If the survey revealed defects exceeding permissible limits, the assemblies and components of the refrigerating plant shall be repaired or replaced. Referred to such defects may be damages, wear and failures indicated in 2.4.5, Part II "Survey Schedule and Scope".

6.6 If the survey of the refrigerating plant revealed wear, damages or failures of its machinery installation or electrical equipment components, which are considered to pose a danger to the ship or the persons onboard, the item shall be recognized as not complying with the RS requirements.

A possibility of temporary operation of the refrigerating plant with certain restrictions shall in each case be reviewed by the Register.

When it is found during operational testing that vibration of machinery or heat exchangers exceeds the specified limits (refer to 6.3), arrangements shall be made to reduce vibration.

6.7 When it is found during the survey and testing of the classed refrigerating plant that the technical condition of the refrigerating machines or insulation of refrigerated spaces does not allow to maintain the specified temperatures in the refrigerated spaces, freezing chambers and in other cooling devices, the class of the refrigerating plant shall be withdrawn. In this case, the class of the refrigerating plant may be retained for other temperatures in the refrigerated spaces as determined in the course of thermal tests, provided the condition of the refrigerating plant items is not considered to pose a danger to the ship and the persons onboard.

Russian Maritime Register of Shipping

Rules for the Classification Surveys of Ships in Service

FAI "Russian Maritime Register of Shipping"
8, Dvortsovaya Naberezhnaya,
191186, St. Petersburg,
Russian Federation
www.rs-class.org/en/