Version: 01.01.2025

RULES

FOR THE PREVENTION OF POLLUTION FROM SHIPS INTENDED FOR OPERATION IN SEA AREAS AND INLAND WATERWAYS OF THE RUSSIAN FEDERATION

ND No. 2-020101-163-E

St. Petersburg

RULES FOR THE PREVENTION OF POLLUTION FROM SHIPS INTENDED FOR OPERATION IN SEA AREAS AND INLAND WATERWAYS OF THE RUSSIAN FEDERATION

The present version of the Rules for the Prevention of Pollution from Ships Intended for Operation in Sea Areas and Inland Waterways of the Russian Federation of Russian Maritime Register of Shipping (RS, the Register) has been approved in accordance with the established approval procedure and comes into force on have been approved in accordance with the established approval procedure and come into force on 1 January 2025.

The present version is based on the version dated 1 January 2024 and Rule Change Notice No. 24-220860 taking into account the amendments and additions developed immediately before publication (refer to the Revision History).

© Russian Maritime Register of Shipping, 2025

REVISION HISTORY[1]

Item	Description		Remarks
Part II, para 1.1.1	As was	As is	Editorial amendment of 03.02.2026
	Oil tanker means a ship constructed or adapted primarily to carry oil in bulk in its cargo spaces and includes combination carriers, any "NLS tanker" as defined in Part III "Ship's Construction, Equipment and Arrangements for the Prevention of Pollution by Noxious Liquid Substances in Bulk" of the Rules, and any gas carrier as defined in regulation 3.20 of Chapter II-1 of SOLAS-74 (as amended), when carrying a cargo or part cargo of oil in bulk.	Oil tanker means any ship constructed or adapted primarily to carry oil in bulk in its cargo spaces and includes combination carriers, any "NLS tanker" as defined in Part III "Ship's Construction, Equipment and Arrangements for the Prevention of Pollution by Noxious Liquid Substances in Bulk" of the Rules, and any gas carrier as defined in regulation 3.20 of Chapter II-1 of SOLAS-74 (as amended), when carrying a cargo or part cargo of oil in bulk.	
Part II, Chapter 3.7 Chapter title	"**3.7 CRUDE OIL WASHING REQUIREMENTS**".	"**3.7 CARGO TANK CLEANING SYSTEM REQUIREMENTS**".	Editorial amendment of 03.02.2026
Part II, Para 3.8.2	**3.8.2** Every oil tanker of 150 m in length and above shall comply with the requirements of the Common Structural Rules for Bulk Carriers and Oil Tankers, as well as the applicable international requirements."	**3.8.2** Every self-propelled oil tanker of 150 meters in length and above, determined in compliance with LL-66/88, and of unrestricted service shall comply with the requirements of the Common Structural Rules for Bulk Carriers and Oil Tankers.	Editorial amendment of 24.02.2025
Part III, para 1.1 Definition of an NLS tanker	NLS tanker means a ship constructed or adapted to carry a cargo of noxious liquid substances in bulk, and includes an "oil tanker" as defined in Annex I to MARPOL 73/78 when certified to carry a cargo or part cargo of noxious liquid substances in bulk.	NLS tanker means any ship constructed or adapted to carry a cargo of noxious liquid substances in bulk, and includes an "oil tanker" as defined in Annex I to MARPOL 73/78 when certified to carry a cargo or part cargo of noxious liquid substances in bulk.	Editorial amendment of 03.02.2026

[1] With the exception of amendments and additions introduced by Rule Change Notices (RCN), as well as of misprints and omissions.

Item	Description		Remarks
Part III, para 1.1 Definition of a chemical tanker	Chemical tanker means a ship constructed or adapted for the carriage in bulk of any liquid product listed in Chapter 17 of the IBC Code.	Chemical tanker means any ship constructed or adapted for the carriage in bulk of any liquid product listed in Chapter 17 of the IBC Code.	Editorial amendment of 03.02.2026
Part III, Section 3 Section title	**"3 CONSTRUCTION OF SHIPS CARRYING NOXIOUS LIQUID SUBSTANCES IN BULK"**.	**"3 CONSTRUCTION OF SHIPS CARRYING NOXIOUS LIQUID SUBSTANCES AND DANGEROUS CHEMICALS IN BULK"**.	Editorial amendment of 03.02.2026
Part III, Section 4 Section title	**"4 REQUIREMENTS FOR THE EQUIPMENT OF SHIPS CARRYING NOXIOUS LIQUID SUBSTANCES IN BULK"**.	**"4 REQUIREMENTS FOR THE EQUIPMENT OF SHIPS CARRYING NOXIOUS LIQUID SUBSTANCES AND DANGEROUS CHEMICALS IN BULK"**.	Editorial amendment of 03.02.2026
Part VI, Chapter 2.2 The Chapter title	**"2.2 NITROGEN OXIDES (NO_X) "**	**"2.2 PREVENTIION OF AIR POLLUTION FROM HARMFUL SUBSTANCES IN MARINE ENGINE EXHAUST GASES"**	Editorial amendment of 03.02.2026
Part VI, Para 2.2.4	The references to the form of the Pollution from Ships Prevention Certificate, para and line numbers are excluded.		Editorial amendment of 03.02.2026

PART I. REGULATIONS FOR TECHNICAL SUPERVISION

1 GENERAL

1.1 SCOPE OF APPLICATION

1.1.1 Rules for the prevention of pollution from ships intended for the operation in sea areas and inland waterways of the Russian Federation[1] apply to the ships intended for ships flying the flag of the Russian Federation and classed by the Russian Maritime Register of Shipping[2], as well as the shipboard equipment.

1.1.2 For newly built ships the rules and amendments thereto shall apply in accordance with the provisions of Section 1 of the General Regulations for the Classification and Other Activity.

1.1.3 The requirements of the Rules apply to the ships in service as stipulated in the text of the Rules. Thus, the requirements of the edition of the Rules according to which the ships were built, are applied, unless otherwise specified in the subsequent editions of the Rules and amendments and additions thereto issued after publication of the Rules.

---

[1] Hereinafter referred to as "the Rules".
[2] Hereinafter referred to as "the Register".

1.2 DEFINITIONS

1.2.1 Definitions and explanations pertinent to the general terminology of the Rules are given in Part I "Classification" of the Rules for the Classification and Construction of Sea-Going Ships[1].

For the purpose of the present Rules, the following definitions have been adopted.

RF Administration means the Government of the Russian Federation, under whose authority the ship is operating.

Unmanned non-self-propelled (UNSP) barge means a ship that:

for the purpose of Part II "Ship's Construction, Equipment and Arrangements for the Prevention of Pollution by Oil":

is not propelled by mechanical means;

carries no oil;

has no machinery fitted that may use oil or generate oil residue (sludge);

has no oil fuel tank, lubricating oil tank, oily bilge water holding tank and oil residue (sludge) tank; and

has neither persons nor living animals on board;

for the purpose of Part IV "Ship's Equipment and Arrangements for the Prevention of Pollution by Sewage":

is not propelled by mechanical means;

has neither persons nor living animals on board;

is not used for holding sewage during transport; and

has no arrangements that could produce sewage;

for the purpose of Part VI "Ship's Equipment and Arrangements for the Prevention of Air Pollution":

is not propelled by mechanical means;

has no systems, equipment and/or machinery fitted that may generate emissions regulated by this Part; and

has neither persons nor living animals on board.

Inland waterways means natural or man-made inland federal communication lines provided with navigational marks or other means and used for shipping.

Harmful substance means any substance, which, if introduced into water, is liable to create hazards to human health, to harm living resources and marine life, to damage amenities or to interfere with other legitimate uses of the aquatic environment and includes any substance subject to control by these Rules.

Attained Energy Efficiency Design Index (attained EEDI) means the Energy Efficiency Design Index (EEDI) value achieved by an individual ship in accordance with Regulation 20 of Chapter 4, Annex VI to MARPOL 73/78.

IMO means the International Maritime Organization.

IBC Code means the International Code for the Construction and Equipment of Ships Carrying Dangerous Chemicals in Bulk.

MARPOL 73/78 means the International Convention for the Prevention of Pollution from Ships, 1973, as modified by the Protocols of 1978 and 1997 relating thereto, including amendments adopted by the IMO Marine Environment Protection Committee.

Sea areas of the Russian Federation mean sea areas including internal sea waters, territorial sea of the Russian Federation (12 nautical miles measured from baselines according to the Federal Law), as well as contiguous zone of the Russian Federation (24 nautical miles from baselines, from which the breadth of territorial sea is measured), and

---

[1] Hereinafter referred to as "the RS Rules/C".

also exclusive economic zone (which external boundary is 200 nautical miles from baselines, from which the breadth of territorial sea is measured).

Similar stage of construction means the stage at which:

construction identifiable with a specific ship has begun; and

assembly of that ship has commenced comprising at least 50 t or one per cent of the estimated mass of all structural material, whichever is less.

Discharge, in relation to harmful substances or effluents containing such substances, means any release howsoever caused from a ship and includes any escape, disposal, spilling, leakage, pumping, emitting or emptying.

Discharge does not include:

dumping within the meaning of the Convention on the Prevention of Marine Pollution by Dumping of Wastes and Other Matter, 1972; or

release of harmful substances directly arising from the exploration, exploitation and associated offshore processing of sea-bed mineral resources; or

release of harmful substances for purposes of legitimate scientific research into pollution abatement or control.

Category A and B ships means the ships designed for operation in polar waters as determined in 2.1 and 2.2 of the Introduction of the International Code for Ships Operating in Polar Waters (Polar Code) given in IMO resolution MEPC.264(68).

Ship means a vessel of any type or purpose operating in sea areas and inland waterways including mobile offshore drilling units (MODU), fixed offshore platforms (FOP), floating offshore oil-and-gas production unit (FPU) and other floating or fixed platforms.

NO_x Technical Code means the Technical Code on Control of Emission of Nitrogen Oxides from Marine Diesel Engines.

Electronic Record Book means a device or system, approved by the Register, used to electronically record the required entries for discharges, transfers and other operations as required under Parts I, II, V and VI in lieu of a hard copy record book.

2 SURVEYS

2.1 TYPES OF SURVEYS

2.1.1 With regard to prevention of pollution by oil, every oil tanker and every other ship specified in 1.1.1 shall be subject to the surveys specified below within the scope of the requirements stipulated in Part II "Ship's Construction, Equipment and Arrangements for the Prevention of Pollution by Oil":

.1 initial survey before the ship is put into service or before the Pollution from Ships Prevention Certificate (form 2.4.18RF) is issued for the first time, which shall include a complete survey of the equipment, systems, fittings, arrangements and material to ensure that they fully comply with the applicable requirements of the Rules;

.2 special (renewal) survey at intervals not exceeding five years. The renewal survey shall be such as to ensure that the equipment, systems, fittings, arrangements and material fully comply with applicable requirements;

.3 intermediate survey within three months before or after the second anniversary date or within three months before or after the third anniversary date of the Certificate which shall take the place of one of the annual surveys specified in 2.1.1.4. The intermediate survey shall be such as to ensure that the equipment and arrangements fully comply with the applicable requirements and are in good working order;

.4 annual survey within three months before or after each anniversary date of the Certificate, including a general inspection of the equipment, systems, fittings, arrangements and material to ensure that they have been maintained in fit condition and that they remain satisfactory for the service for which the ship is intended;

.5 occasional survey according to the circumstances, shall be made whenever any important repairs or renewals are made, which shall be performed during repair. The survey shall be such as to ensure that the necessary repairs or renewals have been effectively made, that the material and workmanship of such repairs or renewals are in all respects satisfactory and that the ship complies in all respects with the applicable requirements;

.6 unmanned non-self-propelled barge may be exempted from initial and/or periodical surveys for the period not exceeding five years provided the survey is carried out in accordance with the procedures specified in IMO circular MEPC.1/Circ.892.

2.1.2 With regard to prevention of pollution by noxious liquid substances in bulk, every ship carrying these substances and specified in 1.1.1 shall be subject to the surveys specified bellow in the scope of requirements in compliance with Part III "Ship's Construction, Equipment and Arrangements for the Prevention of Pollution by Noxious Liquid Substances in Bulk":

.1 initial survey in compliance with 2.1.1.1;

.2 special (renewal) survey according to 2.1.1.2;

.3 intermediate survey according to 2.1.1.3;

.4 annual survey according to 2.1.1.4 as to ensure that the structure, equipment, systems, devices, arrangements and materials have been maintained in fit condition;

.5 occasional survey in compliance with 2.1.1.5 according to the circumstances which shall be performed during repair.

2.1.3 With regard to prevention of pollution by sewage, every ship carrying these substances and specified in 1.1.1 shall be subject to the surveys specified bellow in the scope of requirements in compliance with Part IV "Ship's Equipment and Arrangements for the Prevention of Pollution by Sewage":

.1 initial survey in compliance with 2.1.1.1;

.2 special (renewal) survey according to 2.1.1.2;

.3 intermediate survey according to 2.1.1.5;

.4 unmanned non-self-propelled barge may be exempted from initial and/or periodical surveys for the period not exceeding five years provided the survey is carried out in accordance with the procedures specified in IMO circular MEPC.1/Circ.892.

2.1.4 With regard to prevention of pollution by garbage every ship specified in 1.1.1 shall be subject to surveys according to 2.1.1.1, 2.1.1.2, 2.1.1.4 and 2.1.1.5 within the scope of the requirements stipulated in Part V "Ship's Equipment and Arrangements for the Prevention of Pollution by Garbage".

2.1.5 With regard to prevention of air pollution every ship specified in 1.1.1 shall be subject to the surveys specified bellow in the scope of requirements in compliance with Part VI "Ship's Equipment and Arrangements for the Prevention of Air Pollution":

.1 initial survey in compliance with 2.1.1.1;

.2 special (renewal) survey in compliance with 2.1.1.2;

.3 intermediate survey according to 2.1.1.3;

.4 annual survey according to 2.1.1.4 as to ensure that the structure, equipment, systems, devices, arrangements and materials have been maintained in fit condition;

.5 occasional survey in compliance with 2.1.1.5 according to the circumstances which shall be performed during repair;

.6 unmanned non-self-propelled barge may be exempted from initial and/or periodical surveys for the period not exceeding five years provided the survey is carried out in accordance with the procedures specified in IMO circular MEPC.1/Circ.892.

2.1.6 With regard to prevention of air pollution by engine, every engine covered by the requirements of 2.2, Part VI "Ship's Equipment and Arrangements for the Prevention of Air Pollution" shall be subject to the surveys specified below:

.1 initial survey at manufacturer's in compliance with 2.2.9, Part VI "Ship’s Equipment and Arrangements for the Prevention of Air Pollution";

.2 every engine shall be subjected to initial survey after installation on board but before it is placed in service according to the Procedure given in the agreed NO_x Technical File for this engine or Emission Technical Data Sheet for this engine, whatever is applicable;

.3 special, intermediate and annual surveys, which shall be conducted as part of a ship's surveys as to ensure that the engine fully complies with the requirements of 2.2, Part VI "Ship's Equipment and Arrangements for the Prevention of Air Pollution" .

Upon satisfactory results of initial and periodical surveys of marine diesel engines covered by the requirements of 2.1 — 2.5 of Part VI "Ship's Equipment and Arrangements for the Prevention of Air Pollution" a relevant note shall be endorsed in para 2.2.1 of the Certificate (Form 2.4.18RF) in compliance with IMO Circular MEPC.1/Circ.849.

2.1.7 With regard to energy efficiency of ships, every ship of 400 gross tonnage and above covered by the requirements of 2.6 Part VI "Ship's Equipment and Arrangements for the Prevention of Air Pollution" shall be subject to the surveys specified below taking into consideration the IMO 2014 Guidelines on Survey and Certification of the Energy Efficiency Design Index (EEDI), given in IMO resolution MEPC.254(67) as amended:

.1 initial survey before a new ship is put into service or before International Energy Efficiency Certificate (Form 2.4.3RF) with Supplement to the Energy Efficiency Certificate (Form 2.4.3.1RF) is issued. The survey shall be such as to ensure that Attained Energy Efficiency Design Index (Attained EEDI) of the ship complies with Chapter 4, Annex VI to MARPOL 73/78 and that Ship Energy Efficiency Management Plan (SEEMP) required by 2.6.9 of Part VI "Ship’s Equipment and Arrangements for the Prevention of Air Pollution" is available onboard;

.2 a general or partial survey, according to the circumstances, after a major conversion of a ship, to which requirements for EEDI apply. The survey shall ensure that the attained EEDI is recalculated as necessary and meets the requirements of 2.6.5, Part VI "Ship's Equipment and Arrangements for the Prevention of Air Pollution" with the reduction factor X in Table 2.6.5

of Part VI "Ship's Equipment and Arrangements for the Prevention of Air Pollution", applicable to the type and size of the ship after conversion in the time phase in compliance with the due date of a building contract or keel laying or delivery specified for the ship prior to conversion;

.3 in cases where the major conversion of a new or existing ship is so extensive that the ship is regarded as a newly constructed ship, the necessity of an initial survey on attained EEDI shall be determined.

Such a survey shall ensure that the attained EEDI is calculated and meets the requirements of 2.6.5, Part VI "Ship's Equipment and Arrangements for the Prevention of Air Pollution" with the reduction factor X given in Table 2.6.5 of this Part of the Rules, for the type and size of the ship after conversion on the date of signing the contract for its conversion or, when no contract is available, by the date of start of conversion.

The survey shall ensure that the SEEMP is on board;

.4 for existing ships the verification of the requirement to have a SEEMP on board, shall take place at the first intermediate or renewal survey according to 2.1.5.2 and 2.1.5.3, whichever is the first, on or after 1 January 2013;

.5 upon satisfactory results of the above surveys, the Certificate (Form 2.4.3 RF) with Supplement (Form 2.4.3.1 RF) can be issued for the ship. The relevant note shall be endorsed on the Certificate (Form 2.4.3 RF).

2.1.8 After completion of any above mentioned survey, no modifications of the equipment, systems, fittings, arrangements and material subject to surveys shall be allowed without agreement with the Register.

2.1.9 Upon satisfactory results of initial survey of a ship or survey for renewal of Certificate (Form 2.4.18RF) the Register issues this Certificate to any ship specified in 1.1 so that it could operate in the RF sea areas and inland waterways.

2.1.10 For ships in service covered by the present Rules and for which the contract on construction have been made, or, if it is not available, the keel of which have been laid before 1 December 2010 (the date of coming into force of the first edition of the Rules), the non-international standard certificates in compliance with 1.11 of Part III "Survey of Ships in Compliance with International Conventions, Codes and Resolutions" of the Guidelines on Technical Supervision of Ships in Service, if the ship complies with the applicable requirements of MARPOL 73/78.

2.2 SCOPE OF EQUIPMENT SURVEYS

2.2.1 The scope of equipment surveys and intervals between them are given in Table 2.2.1.

Table 2.2.1

Nos.	Item of survey	Ship survey			
		initial	annual	intermediate	special
1 Equipment and arrangements for the prevention of pollution by oil					
1.1	Tanks (segregated ballast, slop, cargo, fuel oil, oil residue (sludge) holding tank and oily bilge water holding tank)	O			O
1.2	Crude oil washing system	OHP	P	P	OHP
1.3	15 ppm bilge separator	OP	P	P	OMP[1]
1.4	15 ppm bilge alarm	EMP	MP	MP	EMP
1.5	Automatic stopping device	OP	P	P	OP
1.6	Standard discharge connection	C	C	C	C
1.7	Discharge monitoring and control system for ballast and washing water	OMP	MP	MP	OMP
1.8	Device for determining the oil content	EMP	MP	MP	EMP
1.9	Oil/ water interface detectors in slop tanks	EMP	MP	MP	EMP
1.10	Pumping and discharge arrangement for oily bilge water	OP	P	P	OP
1.11	Pumping, piping and discharge arrangement for oil residue (sludge)	OP	P	P	OP
1.12	Instrumentation	E	E	E	E
2 Equipment and arrangements for the prevention of pollution by noxious liquid substances in bulk					
2.1	Tanks (segregated ballast, slop and cargo tanks)	OH			O
2.2	Pumps, pipelines, arrangements for cargo unloading and tank stripping	OP	P	P	OMP
2.3	Ventilation equipment for removal of cargo residues	OMP	P	P	OMP
2.4	Tank washing equipment	OP	P	P	OP
2.5	Instrumentation	E	E	E	E
3 Equipment and arrangements for the prevention of pollution by sewage					
3.1	Sewage treatment plants	OHP			OMHP[2]
3.2	Sewage comminution and disinfection systems	OHP			OMHP
3.3	Holding tanks	OH			OMH
3.4	Sewage discharge systems	OHP			OHP
3.5	Standard discharge connection	C			C
3.6	Instrumentation	E			E
4 Equipment and arrangements for the prevention of pollution by garbage					
4.1	Incinerators	OP	P		OMP
4.2	Garbage comminuters and compactors	OP	P		OP
4.3	Garbage receptacles and storages	C	C		C
4.4	Instrumentation	E	E		E
5 Equipment and arrangements for the prevention of air pollution					
5.1	Engines covered by provisions in 2.2.1, Part VI "Ship's Equipment and Arrangements for the Prevention of Air Pollution"	OMP	OM	OM	OMP
5.2	System for change-over of engines to fuel oil with low sulphur content	OP	P	P	OP
5.3	Exhaust gas cleaning system for reduction of SO_x emissions (EGCS-SO_x)	OMP	P	P	OMP
5.4	Volatile organic compounds vapours collection system (VOC)	OP	P	P	OP

[1] At special surveys the results of the sample analysis carried out by a recognized laboratory shall be provided.
[2] At special surveys conclusion of the state sanitary authorities shall be submitted to confirm the compliance of the plants with the sanitary standards and requirements.

5.5	Incinerators	OMP	P	P	OMP
5.6	Instrumentation	E	E	E	E

S y m b o l s :

O – examination with provision of measures to enable the items involved to be made accessible for examination, to be opened up and dismantled, if necessary;

C – external examination;

M – measurements of wear, clearances, insulation resistance, etc;

H – pressure tests (hydraulic, pneumatic);

P – testing of machinery, equipment and arrangements under working conditions, external examination included;

E – control of availability of documents in force and/or brands confirming the checking of monitoring instruments by the relevant competent bodies, if they are subject thereto, as well as availability of a Bilge Alarm Calibration Certificate.

3 TECHNICAL DOCUMENTATION

3.1 Prior to the commencement of ship construction, Plan approval documentation on technical design in the scope according to Section 3, Part I "Classification" of the RS Rules/C shall be submitted to the Register.

3.2 During surveys of ships for compliance with the requirements of these Rules, availability on board ship of all the documentation required according to Section 17 of the Guidelines on Technical Supervision of Ships under Construction and Appendix 1 to Part II "Technical Documentation" of the Rules for Technical Supervision During Construction of Ships and Manufacture of Materials and Products for Ships[1] (whichever is applicable) shall be checked. In addition to the above, it is necessary to check availability on board the ship of the following documentation:

.1 approved documentation on operational procedures and ballast arrangements for oil tankers having special ballast arrangements, if applicable;

.2 user manual for a system of prompt access to computerized, shorebased emergency response services capable of carrying out damage stability and residual structural strength calculations; agreement with a shorebased emergency response service undertaking damage stability and residual structural strength calculations; Report (form 6.3.29) on the shorebased damage stability and residual structural strength calculation program with the approved test loading conditions used by the emergency response service, as well as information relating to a shorebased emergency response service recorded in SOPEP/SMPEP;

.3 copy of SO_x Emission Compliance Certificate/Certificate of Unit Approval for Exhaust Gas Cleaning Systems (Form 2.4.42), if applicable;

.4 programmes and test results for determination of a quantity of residues in cargo tanks, pumps and associated piping on ships certified to carry noxious liquid substances in bulk;

.5 approved electronic record books, if applicable.

3.3 At special, annual and intermediate surveys of ships for compliance with the requirements of the Rules, the availability on board ship of the documentation according to 3.1 shall be checked, as well as of the following documentation:

.1 Statement of Compliance according to provisions of condition assessment scheme (CAS) (for oil tankers, if applicable);

.2 full set of previous survey reports, including measurement results of hull members, records of repairs, as well as CAS Survey Reports (if applicable);

.3 bunker delivery notes.

---

[1] Hereinafter referred to as "the Rules TSSS".

PART II. SHIP'S CONSTRUCTION, EQUIPMENT AND ARRANGEMENTS FOR THE PREVENTION OF POLLUTION BY OIL

1 DEFINITIONS

1.1 In the present Part of the Rules the following definitions have been adopted.

Wing tank means any tank adjacent to the ship's side shell plating.

Light weight means the displacement of a ship in metric tons without cargo, fuel, lubricating oil, ballast water, fresh water and feed water in tanks, consumable stores, and passengers and crew and their effects.

Deadweight (DWT) means the difference in tones between the displacement of a ship in water of a relative density of 1,025 t/m^3 at the load waterline corresponding to the summer freeboard and the lightweight of the ship.

Length (*L*) means 96 per cent of the total length on a waterline at 85 per cent of the least moulded depth measured from the top of the keel, or the length from the foreside of the stem to the axis of the rudder stock on that waterline, if that be greater. In ships designed with a rake of keel the waterline on which this length is measured shall be parallel to the designed waterline. The length *L* shall be measured in meters.

Anniversary date means the day and the month of each year, which will correspond to the date of expiry of the Certificate (Form 2.4.18RF).

Fuel oil means heavy distillates or residues from crude oil or blends of such materials intended for use as a fuel for the production of heat or power of a quality equivalent to the specifications acceptable to IMO.

Major (substantial) conversion of the ship means a conversion of a ship which:

substantially alters the dimensions or carrying capacity of the ship; or

changes the type of the ship; or

is intended substantially to prolong its life; or

otherwise so alters the ship that, if it were a new ship, it would become subject to relevant provisions of the Rules not applicable to it as to the ship in service.

Segregated ballast means the ballast water introduced into a tank which is completely separated from the cargo oil and fuel oil system and which is permanently allocated to the carriage of ballast or to the carriage of ballast or cargoes other than oil or noxious liquid substances.

Combination carrier means a ship designed to carry either oil or solid cargoes in bulk.

Oily bilge water means water which may be contaminated by oil resulting from things such as leakage or maintenance work in machinery spaces. Any liquid entering the bilge system including bilge wells, bilge piping, tank top or bilge holding tanks is considered oily bilge water.

Instantaneous rate of discharge of oil content means the rate of discharge of oil in litres per hour at any instant divided by the speed of the ship in knots at the same instant.

Amidships is at the middle of the length (*L*).

Oil tanker means any ship constructed or adapted primarily to carry oil in bulk in its cargo spaces and includes combination carriers, any "NLS tanker" as defined in Part III "Ship's Construction, Equipment and Arrangements for the Prevention of Pollution by Noxious Liquid Substances in Bulk" of the Rules, and any gas carrier as defined in regulation 3.20 of Chapter II-1 of SOLAS-74 (as amended), when carrying a cargo or part cargo of oil in bulk.

Product carrier means an oil tanker engaged in the trade of carrying oil other than crude oil.

Oily mixture means a mixture with any oil content.

Oily waste means oil sludge and oily bilge water.

Oil means petroleum in any form including crude oil, fuel oil, oil residue (sludge), oil refuse and refined products.

Heavy grade oil means any of the following:

crude oils having a density at 15 °C higher than 900 kg/m^3;

oils, other than crude oils, having either a density at 15 °C higher than 900 kg/m^3 or a kinetic viscosity at 50 °C higher than 180 mm^2/s; or

bitumen, tar and their emulsions.

Oil fuel means any oil used as fuel in connection with the propulsion and auxiliary machinery of the ship in which such oil is carried.

Sludge means part of oil, which due to its consistence is not liable to conventional pumping or processing and requires special methods and devices for disposal from the ship.

Oil residue (sludge) means the residual waste oil products such as those resulting from the purification of fuel or lubricating oil from main or auxiliary machinery or separated waste oil from bilge water separators, oil filtering equipment or oil collected in drip trays, and waste hydraulic and lubricating oils.

Forward and after perpendiculars shall be taken at the forward and after ends of the length (*L*). The forward perpendicular shall coincide with the foreside of the stem on the waterline on which the length is measured.

Volumes and areas in a ship shall be calculated in all cases to moulded lines.

Exhausted oil means exhausted lubricating oil, hydraulic oil or other hydrocarbon based liquids, which are not suitable for use in machinery due to deterioration and contamination.

Separated sludge means sludge resulting from purification of fuel and lubricating oil.

Slop tank means a tank specifically designated for the collection of tank drainings, tank washings and other oily mixtures.

Constructed ship means a ship the keel of which is laid or which is at a similar stage of construction.

Bilge separator may include any combination of a separator, filter or coalescer, and also a single unit designed to produce an effluent with oil content as required.

Bilge alarm means a device giving off a signal whenever the oil content in the effluent exceeds the required standards.

Ship delivered before 1 January 2014 means a ship for which the building contract is placed before 1 January 2011; or

in the absence of a building contract, the keel of which is laid or which is at a similar stage of construction before 1 January 2012; or the delivery of which is before 1 January 2014.

Crude oil means any liquid hydrocarbon mixture occurring naturally in the earth whether or not treated to render it suitable for transportation and includes:

crude oil from which certain distillate fractions may have been removed;

crude oil to which certain distillate fractions may have been added.

Tank means an enclosed space, which is formed by the permanent structure of a ship and which is designed for the carriage of liquid in bulk.

Bilge water tank means a tank for accumulating oily bilge water.

Oil residue (sludge) tanks are the tanks which hold oil residue (sludge) directly from which oil residue (sludge) may be disposed through the standard discharge connection or any other approved means of disposal.

Centre tank means any tank inboard of a longitudinal bulkhead.

Breadth (*B*) means the maximum breadth of the ship, measured amidships to the moulded line of the frame in a ship with a metal shell and to the outer surface of the hull in a ship with a shell of any other material. The breadth (*B*) is measured in meters.

Sludge tanks mean tanks for accumulating sludge after fuel and lubricating oil separation.

2 SURVEYS AND SCOPE OF TECHNICAL SUPERVISION

2.1 The types and scope of surveys, as well as the guidelines on the documents issued by the Register are given in Part I "Regulations for Technical Supervision".

3 REQUIREMENTS FOR OIL TANKERS

3.1 SEGREGATED BALLAST TANKS

3.1.1 Oil tankers shall be provided with segregated ballast tanks considering 3.8.1 of this Part.

3.1.2 The capacity of the segregated ballast tanks of oil tankers shall be determined subject to provision of their safe operation.

For oil tankers of 20 000 deadweight and above the draught and trim shall meet the requirements specified in Regulation 18.2 of Annex I to MARPOL 73/78.

Thus, the draught and trim of an oil tanker below 150 m in length shall not be less than the values calculated in compliance with Table 3.1.2.

In any case stability shall be checked separately.

Table 3.1.2

Version	Minimum draught at bow, in m	Minimum draught at stern, in m	Mean draught, in m	Minimum mean draught, in m	Maximum trim, in m
A	–	–	0,2 + 0,032*L*	–	(0,024 – 6·10^{-5}*L*)*L*
B	0,700 + 0,0170*L*	2,3 + 0,030*L*	–	1,550 + 0,023*L*	1,600 + 0,013*L*
C	0,5000 + 0,0225*L*	2,0000 + 0,0275*L*	–	–	–

N o t e . A – good ballast conditions during sailing in weather 5 and less under Beaufort scale are provided;
B – good ballast conditions during sailing in weather 6 and less under Beaufort scale are provided. The formulae of the minimum draught at bow and stern, or the minimum mean draught and minimum trim may be used in calculations;
C – contains certain increased draughts to prevent the propeller emergence and ship's slamming.

3.1.3 Provision may be made for emergency discharge of the segregated ballast by means of a connection to a cargo pump through a portable spool piece.

In this case, non-return valves shall be fitted on the segregated ballast connections to prevent the passage of oil to the segregated ballast tanks. The portable spool piece shall be mounted in a conspicuous position in the pump room and a permanent notice restricting its use shall be prominently displayed adjacent to it.

3.1.4 Segregated ballast tanks shall be provided with independent ballast pumps and pipelines, intended exclusively for the intake of ballast water from the sea and discharge it into the sea.

3.2 ACCIDENTAL OIL OUTFLOW PERFORMANCE

3.2.1 To provide adequate protection against oil pollution in the event of collision or stranding every oil tanker shall be in compliance with the requirements of Regulation 23 of Annex I to MARPOL 73/78 as regards to the following:

.1 the mean oil outflow parameter for an oil tanker and combination carrier of 5000 tons deadweight and above;

.2 dimensions of cargo tanks for oil tanker below 5000 tons deadweight.

3.2.2 Cargo pipelines of piping that run through cargo tanks in a position less than 0,30 Bs from the ship's side (where B_s is the maximum moulded breadth of the ship, in m, at the deepest loadline or below it) and less than 0,30D_s from the ship's bottom (where Ds is moulded depth, in m, measured at the middle of length to the upper deck at the side), shall be fitted with valves or similar closing devices and fixed on the cargo tank or in close vicinity to it. These valves shall be kept closed at sea at any time when the tanks contain cargo oil, except that they the may be opened only for cargo transfer needed for essential cargo operations.

3.2.3 Cargo system piping of every oil tanker shall comply with the requirements of Section 9, Part VIII "Systems and Piping" of the RS Rules/C " and international requirements applicable to this ship.

3.3 STABILITY AND SUBDIVISION

3.3.1 Every oil tanker of 5000 tons deadweight and above shall comply with the intact stability criteria, as defined in Regulation 27, of Annex I to MARPOL 73/78.

3.3.2 Every oil tanker of 150 gross tonnage and above shall comply with the subdivision and damage stability criteria as specified in Regulation 28 of Annex I to MARPOL 73/78.

3.3.3 All oil tankers shall be fitted with a stability instrument, capable of verifying compliance with intact and damage stability requirements in compliance with IMO resolution MEPC 248(66).

3.4 SLOP TANKS

3.4.1 Every oil tanker of 150 gross tonnage and above, as well as ships other than oil tankers but having cargo spaces specially built and used to carry oil in bulk, the total capacity of which is 1000 m^3 and above, shall be provided with slop tanks and means for cleaning and transferring cargo tank washings from the cargo tanks to slop tanks in compliance with Regulation 29 of Annex I to MARPOL 73/78.

3.4.2 Requirements of 3.4.1 do not apply to ships engaged exclusively on voyages of 72 hours or less in duration and within 50 miles from the nearest land, provided that all oily mixtures are retained on board for their subsequent discharge to reception facilities.

3.4.3 Where a pipeline is provided for discharge of oily mixtures from machinery spaces to slop tanks, it shall be provided with a reliable means to prevent any backflow of liquid cargo and gases into the machinery spaces.

3.5 OIL DISCHARGE MONITORING AND CONTROL SYSTEMS

3.5.1 Each oil tanker of 150 tons gross tonnage and above as well as any ship other than oil tankers, having cargo spaces which are specially constructed and utilized to carry oil of aggregate capacity of 1000 m^3 and more shall be equipped with an oil discharge monitoring and control system (ODMCS) subject to Regulation 31 of Annex I to MARPOL 73/78 except when:

.1 a ship is engaged exclusively within special area boundaries as defined by Annex I to MARPOL 73/78 as amended by IMO resolution MEPC.265(68) or in RF arctic waters as defined by the Polar Code given in IMO resolution MEPC.264(68); and/or;

.2 a ship is engaged in the voyages only in sea areas out of special area~~s~~ or arctic waters at offshore distance not more than 50 nautical miles; and/or

The decision on the above exceptions shall be made by the RF Administration with simultaneous adherence to all the following conditions:

all the oily mixtures are retained on board for subsequent discharge to reception facilities, sufficiency of which is ensured by the RF Administration;

under the RF Administration's permission in Certificate (Form 2.4.18RF) a record has been made that the ship is engaged exclusively in voyages of one or more categories mentioned above under the present Regulation, and the discharged quantity, time and port of discharge are registered in the Oil Record Book.

3.5.2 ODMCS shall be placed in compliance with IMO resolution MEPC.108(49) "Revised guidelines and specifications for oil discharge monitoring and control systems for oil tankers", and IMO resolution MEPC.240(65) as amended.

3.5.3 The above Guidelines and specifications are applicable to equipment installed on oil tankers, keels of which were laid on 1 January 2005 or after this date. The Guidelines and Specifications adopted under IMO resolutions A.393(X), A.496(XII), MEPC.13(19) and A.586(14) are applicable to oil tankers built before this date.

3.5.4 ODMCS shall be activated at any drainage of effluents overboard and shall stop any discharge overboard of the oily mixture, instantaneous rate of discharge of oil content exceeding the permissible value in Regulation 34 of Annex I to MARPOL 73/78.

3.5.5 ODMCS shall function efficiently in all environments in which an oil tanker may be under normal operating conditions. The control system shall be so designed and constructed that it remains reliable in climatic conditions and under mechanical effects in compliance with the provisions of Part 2 of Annex to IMO resolution MEPC.108(49) as amended.

3.5.6 ODMCS shall include the equipment specified in para 6.1.4 of IMO resolution MEPC.108(49) as amended, as well as device for determining the oil content of the effluent in ppm. The device shall be approved in accordance with the provisions of this Resolution and shall have a Certificate of Type Approval (COTO) specifying the possible cargo type to transport.

Provided the device is tested and submitted for Type Approval on or after 17 May 2013, it shall have COTO issued in compliance with IMO resolution MEPC.240(65) regardless whether the device is intended for monitoring Biofuel blends either with oil or not.

The oil content meter and any electrical equipment which is part of the meter shall be placed in a non- hazardous area, or shall be certified by the Administration as safe for use in a hazardous atmosphere. Any moving parts of the bilge alarm which are fitted in hazardous areas shall be arranged so as to avoid the formation of static electricity.

3.5.7 Any ODMCS failure shall lead to the stop of discharge.

3.5.8 ODMCS shall have an operational manual approved by the Administration in compliance with IMO resolution MEPC.108(49), as amended, and containing the information considering IACS UI MPC2, as amended.

3.6 OIL/WATER INTERFACE DETECTOR IN SLOP TANKS

3.6.1 For a rapid and accurate determination of the oil/water interface in slop tanks every oil tanker of 150 gross tonnage and above, as well as any other having cargo spaces which are specially constructed and utilized to carry oil of aggregate capacity of 1000 m^3 and more shall be provided with approved effective oil/water interface detectors except for the cases when an oil tanker is engaged in voyages specified in 3.5.1.

3.6.2 Oil/water interface detectors shall comply with specifications in compliance with IMO Resolution MEPC.5(XIII). The devices shall be tested in compliance with the provisions of this Resolution and shall have a Certificate of Type Test (Form 2.4.19).

3.7 CARGO TANK CLEANING SYSTEM REQUIREMENTS

3.7.1 Every crude oil tanker of 20000 deadweight and above shall be fitted with a cargo tank cleaning system using crude oil washing.

This system shall meet the requirements of Regulation 33 of Annex I to MARPOL 73/78 within one year after the tanker was first engaged in carrying crude oil or by the end of the third voyage carrying crude oil suitable for crude oil washing, whichever occurs later.

3.7.2 Any cargo or slop tank fitted with the crude oil washing system shall be provided with inert gas system in compliance with 9.16, Part VIII "Systems and Piping" of the RS Rules/C.

Crude oil washing system and related equipment and devices (pipelines, cleaning machines, pumps, stripping system and ballast piping) shall meet the specifications for design, operation and inspection of crude oil washing system in compliance with the provisions of IMO resolution A.446(XI), as amended by IMO resolutions A.497(XII) and A.897(21), and the requirements of 9.12, Part VIII "Systems and Piping" of the Rules/C.

3.8 REQUIREMENTS FOR DOUBLE HULL OIL TANKERS

3.8.1 Oil tankers shall have double hull and double bottom in compliance with the specified below in 3.8.3 — 3.8.6.

Along the full length cargo tanks shall be protected by ballast tanks or compartments other than oil or fuel oil tanks.

3.8.2 Every self-propelled oil tanker of 150 meters in length and above, determined in compliance with LL-66/88, and of unrestricted service shall comply with the requirements of the Common Structural Rules for Bulk Carriers and Oil Tankers.

3.8.3 Every oil tanker of 600 deadweight and above, but less than 5000 deadweight shall comply with the following requirements:

.1 at any cross-section the depth *h* of each double bottom tank or space shall be not less than specified below:

$$h = B/15, \text{ in m.} \quad (3.8.3.1)$$

The minimum value of *h* = 0,76 m.

At that in turn of the bilge area and at locations without a clearly defined turn of the bilge, the cargo tank boundary line shall run parallel to the line of the midship flat bottom as shown in Fig. 3.8.3.1;

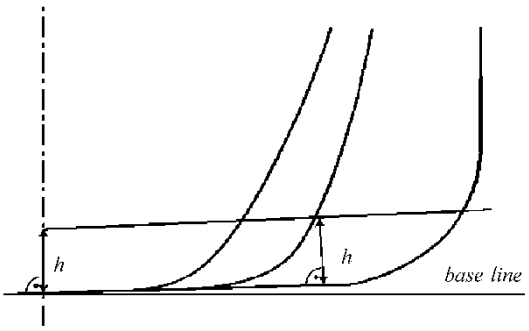

Fig. 3.8.3.1

.2 wing tanks or spaces shall extend either for the full depth of the ship's side or from the top of the double bottom to the uppermost deck, disregarding a rounded gunwale where fitted. They shall be arranged such that the cargo tanks are located inboard of the moulded line of the side shell plating nowhere less than the distance *w* which is calculated by the formula given below and, as shown in Fig. 3.8.3.2, is measured at any cross-section at right angles to the side shell:

$$w = 0{,}4 + 2{,}4DW/20000, \text{ in m.} \quad (3.8.3.2)$$

The minimum value of *w* = 0,76 m.

When cargo tanks are arranged in such a way that the capacity of each of them does not exceed 700 m^3, the above requirement as regard their arrangement may be omitted or the wing tanks or compartments may not be provided.

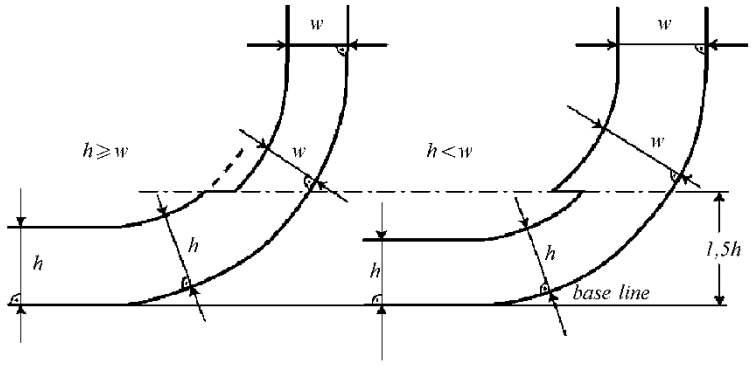

Fig. 3.8.3.2

The provision shall not apply to oil tankers intended to carry heavy grade oils. For these ships the requirement shall be met that the cargo tanks shall be arranged relatively to the moulded line of the side shell in compliance with formula (3.8.3.2). In this case, wing tanks required to protect such entire cargo tanks length and located from the second bottom to the upper deck, may be used as cargo tanks to carry oil other than heavy grade oil if the capacity of each cargo tank does not exceed 700 m^3.

Regardless the above, on Category A and B oil tankers of less than 5000 tonnes deadweight, constructed on or after 1 January 2017, in case of their operation in the RF Arctic waters within the boundaries defined by the Polar Code in IMO resolution MEPC.264(68), the entire cargo tank length shall be protected by:

double bottom tanks or spaces arranged in accordance with the requirements of regulation 19.6.1 of Annex I to MARPOL 73/78; and

the wing tanks or compartments arranged in accordance with regulation 19.3.1 and complying with the applicable requirements as regards the distance in regulation 19.6.2, Annex I to MARPOL 73/78.

3.8.4 Every oil tanker of 5000 deadweight and above shall comply with the following requirements.

The entire cargo tank length shall be protected by ballast tanks or spaces other than oil or fuel oil tanks as follows:

.1 at any cross-section the depth *h* of each double bottom tank or space shall be not less than specified below:

$h = B/15$, in m, or (3.8.4.1)

h = 2 m, whichever is the lesser.

The minimum value of *h* = 1,0 m;

.2 wing tanks or spaces shall extend either for the full depth of the ship's side or from the top of the double bottom to the uppermost deck, disregarding a rounded gunwale where fitted. They shall be arranged such that the cargo tanks are located inboard of the moulded line of the side shell plating nowhere less than the distance *w* which is calculated by the formula given below and, as shown in Fig. 3.8.3.2, is measured at any cross-section at right angles to the side shell:

$w = 0{,}5 + DW/20000$, in m, or (3.8.4.2)

w = 2 m, whichever is the lesser.

The minimum value of *w* = 1,0 m;

.3 in turn of the bilge area and at locations without a clearly defined turn of the bilge. When the distances *h* and *w* are different, the distance *w* shall have preference at levels exceeding 1,5*h* above the base line, as shown in Fig. 3.8.3.2.

In turn of the bilge area this requirement is applied along the full length of the tank.

3.8.5 Ballast piping and other piping such as sounding and vent piping to ballast tanks shall not pass through cargo tanks. Cargo piping and similar piping to cargo tanks shall not pass through ballast tanks.

3.8.6 On oil tankers of 5000 t deadweight and above constructed on or after 1 January 2007, cargo pump rooms shall be provided with the following protective means:

.1 cargo pump rooms shall be provided with a double bottom such that at any cross-section the depth of each double bottom tank or space shall be such that the distance *h* between the bottom of the pump room and the ship's base line measured at the right angles to the ship's base line is not less than specified below:

$h = B/15$, in m, or (3.8.6.1)

h = 2 m, whichever is the lesser.

The minimum value of *h* = 1,0 m;

.2 the double bottom, which protects the cargo pump room, may be arranged as a dry or ballast tank;

.3 ballast pumps shall be provided with suitable arrangements to ensure efficient suction from double bottom tanks;

.4 ballast system pipelines may be fitted in the double bottom of cargo pump rooms, provided that any damage to these pipelines shall not affect operation of the cargo system;

.5 in case the pump room bottom or part thereof (refer to cases NO 2 and NO 3 in Fig. 3.8.6.5) is located above the ship's base line (*BL*) by at least the minimum height, as specified in 3.8.6.1, there will be no need for a double bottom construction in way of the pump room or part thereof.

In case the part of the pump room is located below the minimum height, as required in 3.8.6.1, this part of the pump room shall serve as the double bottom protecting the above part of the pump room (refer to cases NO 1 and NO 3 in Fig. 3.8.6.5).

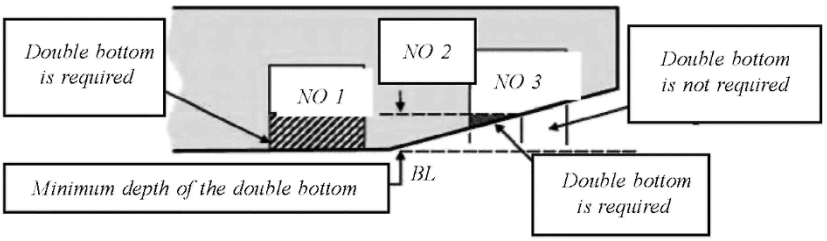

Fig. 3.8.6.5

3.8.7 Suction wells in the double bottom of both cargo tanks and cargo pump rooms shall be as small as practicable, and in this case the distance between the well bottom and the ship's base line measured at the right angle to the ship's base line shall be not less than half the double bottom depth.

3.8.8 For category A and B ships, other than oil tanks, constructed on or after 1 January 2017, operating within Arctic Waters as defined by the Polar Code (refer to IMO resolution MEPC.264(68)) all cargo tank constructed and utilized to carry oil shall be separated from the outer shell by a distance of not less than 0,76 m.

4 BILGE SEPARATORS

4.1 GENERAL

4.1.1 Any ship of 400 gross tonnage and above shall be fitted with a bilge separator (separator) of an approved type, herewith a ship of 10000 gross tonnage and above shall be fitted with the separator of an approved type, the bilge alarm of an approved type and an automatic stopping device. When it is necessary to discharge oily waters in special sea areas of the Baltic Sea, specified in regulation 1 of Annex I to MARPOL 73/78, an alarm and an automatic locking device are required for a ship of 400 gross tonnage and above.

4.1.2 The ship engaged on voyages only within special sea area of the Baltic sea or operating within Arctic Waters as defined by the Polar Code (refer to IMO resolution MEPC.265(68)) or in specified areas and inland waterways, may be exempted from requirement 4.1.1 if the ship is fitted with a bilge water holding tank having a volume adequate for the total retention on board of oily bilge water and the adequate reception facilities available to receive them in a sufficient number of ports and terminals the ship calls at.

4.1.3 Any ship of less than 400 gross tonnage shall be fitted, as far as practicable and reasonable, by the equipment in compliance with 4.1.1 taking into account 4.1.4, or the equipment in compliance with 8.1 to retain oily waters and their subsequent discharge to reception facilities.

4.1.4 In case the ship is operating in inland waterways, if it is planned to discharge oily waters the oil filtering equipment shall be fitted by the bilge alarm of an approved type, an automatic stopping device and be of such capacity as will ensure that any oily mixture passing through the system shall not exceed the maximum permissible concentrations (levels) determined by the state sanitary and epidemiological surveillance authorities.

In case the ship is operating only in sea areas, the oil filtering equipment shall be of such capacity as will ensure that any oily mixture passing through the system has an oil content not exceeding 15 mg/l.

4.1.5 Ships, such as hotel ships, storage vessels, etc., which are stationary except for non-cargo-carrying relocation voyages as well as high-speed ships operating scheduled voyages not exceeding 24 hours, including also voyages without passengers/cargo for the purpose of changing their relocation need as well as not be provided with bilge separators.

Such ships shall be provided with a holding tank having a volume adequate for the total retention on board of the oily bilge water.

4.1.6 If the results of sampling carried out by a recognized laboratory evidence that the equipment specified in 4.1.1 does not ensure the required oil content in the discharged mixture, the ship's operation is not allowed until the equipment defects have been eliminated and satisfactory results of sampling obtained.

4.2 TECHNICAL REQUIREMENTS FOR BILGE SEPARATORS

4.2.1 Bilge separators shall comply with the technical requirements according to the provisions of the applicable IMO resolutions.

4.2.2 Bilge separators shall be of a reliable design. Units and parts being subject to periodical inspections and maintenance shall be readily accessible for the personnel. The capacity of bilge separator pump shall be consistent with the throughput of the bilge separator. In any case, the capacity of bilge separator pump shall not exceed more than 1,1 times the throughput of the bilge separator.

4.2.3 Provision shall be made for drainage of the bilge separator.

4.2.4 When the oily mixture are heated in the bilge separator, steam or water coils may be used for this purpose. Electric heating is permitted, provided the requirements of 15.3, Part XI "Electrical Equipment" of the RS Rules/C are met.

4.2.5 The bilge separator shall be so designed that it functions automatically. However, fail-safe arrangements to avoid any discharge in case of malfunction shall be provided.

There shall be no need for any adjustment to valves and other equipment to bring the bilge separator into operation. The equipment should be capable of operating for at least 24 h of normal duty without attention.

4.2.6 Changing the feed to the bilge separator (from bilge water to oil, bilge water to emulsified bilge water, or from oil and/or water to air) shall not result in the discharge overboard of any mixture with oil content more than specified in 4.1.5.

4.2.7 The bilge separators, pumps and other equipment shall be fitted with pressure, temperature and level gauges, and an alarm and protection system shall be provided.

4.2.8 If a centrifugal separator is incorporated in the bilge separator, it shall meet the requirements of 5.4, Part IX "Machinery" of the RS Rules/C.

4.2.9 Where there is a possibility of oil residue (sludge) leakage, the bilge separators, pumps and other equipment shall be fitted with arrangements for collecting leakages in compliance with the requirements of 13.5, Part VIII "Systems and Piping" of the RS Rules/C.

4.2.10 In a vertical section of the piping for the discharge of purified water, after the bilge separator, provision shall be made for a sampling arrangement located as close as practicable to the bilge separator outlet. The design of the sampling arrangement shall correspond to the design shown in Fig. 4.2.10.

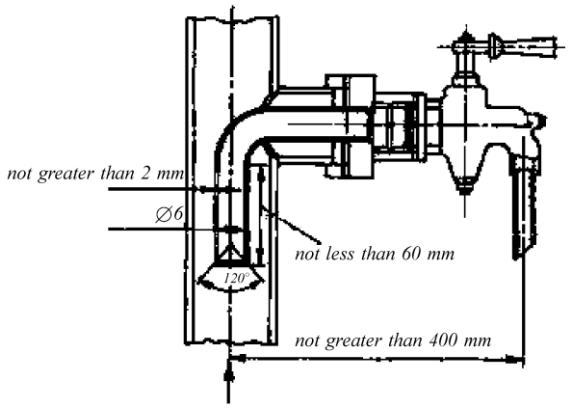

Fig. 4.2.10
Sampling arrangement for pressure piping

4.2.11 If any restrictions for operation and/or assembly are introduced, which are deemed necessary by the Register, these shall be put down on a plate attached to the equipment.

4.2.12 The electrical equipment of the bilge separator shall comply with the requirements of Part XI "Electrical Equipment" of the RS Rules/C.

4.2.13 Re-circulating facilities shall be provided, after and adjacent to the overboard outlet of the stopping device, to enable the bilge separator, as well as bilge alarm and automatic stopping device, to be tested with the overboard discharge closed.

4.2.14 The pipelines for discharge of cleaned water after the bilge separator shall not have connections with the bilge water pipeline system, bilge and ballast systems, except for the outlet referred to in 5.2.13, the recirculation pipeline after automatic stopping device and connection of the emergency drainage pipeline overboard with the pipelines for discharge of cleaned water.

Re- circulating facilities for oily water shall exclude any by-pass of the bilge separator.

4.2.15 The bilge separator inlet pipelines shall not have any connections with the pipelines of sea water or fresh water systems. The separator pipelines may have connections with the above pipelines for washing purposes in accordance with the approved design of the bilge separator.

4.2.16 Recommended throughput of bilge separators depending on the ship's gross tonnage is given in Table 4.2.16.

Table 4.2.16

Ship's gross tonnage	Recommended throughput of bilge separators, in m^3/h
400 and above, but less than 1600	0,5
1600 and above, but less than 4000	1,0
4000 and above, but less than 15000	2,5
15000 and above	5,0

5 BILGE ALARM

5.1 GENERAL

5.1.1 The bilge alarm of an approved type shall be fitted where separators are installed for ships specified in 4.1.1 and 4.1.4.

5.1.2 The ships fitted with the bilge alarm shall be provided with an automatic stopping devices complying with the requirements of Section 6.

5.2 TECHNICAL REQUIREMENTS FOR BILGE ALARM

5.2.1 The bilge alarm design shall comply with the provisions of the applicable IMO resolutions.

5.2.2 The bilge alarm shall resist corrosion in conditions of the marine environment. The bilge alarm shall not contain or use any substances of a dangerous nature, unless adequate arrangements, approved by the Register, are provided to eliminate any hazards introduced thereby.

5.2.3 The bilge alarm shall, if intended to be fitted in locations where flammable atmosphere may be present, comply with the requirements in 2.9, Part XI "Electrical Equipment" of the RS Rules/C. Any moving parts of the bilge alarm which are fitted in hazardous areas shall be arranged so as to avoid the formation of static electricity.

5.2.4 The bilge alarm shall be capable of reliable performance in climatic conditions and under mechanical effects in accordance with 2.1, Part XI "Electrical Equipment" of the RS Rules/C.

5.2.5 The response time of the bilge alarm, that is, the time, which elapses between an alteration in the water sample being supplied to the bilge alarm and the display showing correct response, shall not exceed 5 s.

5.2.6 The bilge alarm shall be fitted with an electrical/electronic device, which is preset by the manufacturer to activate when the oil content in the effluent exceeds a standard value with simultaneous provision of a command signal to the automatic stopping device to discontinue discharge overboard. The device shall also operate automatically if at any time the bilge alarm shall fail to function, require a warm-up period or otherwise be de-energized.

5.2.7 The bilge alarm shall be designed so that its threshold of action may be set by the manufacturer in accordance with the standards specified in 4.1.3.

If the bilge alarm design does not provide such capability, discharge of oily water through filtering equipment in inland waterways is prohibited and the stop valves in the system for discharge of treated oily waters shall be sealed. In this case all the oily water shall be retained on board in holding tanks for discharge to reception facilities.

5.2.8 It is recommended that a simple means be provided aboard ship to check on the instrument drift and the ability to re-zero the instrument.

5.2.9 The bilge alarm shall record the date, time and alarm status, and also the operating status of the bilge separator. The recording device shall also store data for at least 18 months and shall be able to display or print a protocol for official inspections as required. In the event the bilge alarm is replaced, means shall be provided to ensure the data recorded remains available on board for 18 months.

5.2.10 To avoid willful manipulation of the bilge alarm, provision shall be made for the following:

.1 every access of the bilge alarm beyond the operations specified in 5.2.8 requires the breaking of a seal; and

.2 the bilge alarm shall be so constructed that the alarm is always activated whenever clean water is used for cleaning or zeroing purposes.

5.2.11 The accuracy of the 15 ppm Bilge Alarms shall be checked within limits of ±5 ppm by calibration and testing of the equipment and shall be done at intervals not exceeding five years or within the term specified in the manufacturer’s instructions, whichever is shorter. Calibration and testing of the equipment shall be conducted by a manufacturer or persons authorized by the manufacturer. The calibration certificate for the 15 ppm Bilge Alarm, certifying date of last calibration check, shall be retained onboard for inspection purposes. Its validity shall be checked at annual/intermediate/renewal surveys carried out in accordance with 2.1.1 Part I "Regulations for Technical Supervision".

5.2.12 The bilge alarm shall be installed in the ship relative to the bilge separator so that the overall response time (including the response time of the bilge alarm) between an effluent discharge from the bilge separator with the oil content above the standards, specified in 4.1.5, and the operation of the automatic stopping device preventing overboard discharge shall be as short as possible. In any case that time shall not exceed 20 s.

5.2.13 The arrangement on board ship for the extraction of samples from the bilge separator discharge line to the bilge alarm shall give an adequate pressure and flow.

6 AUTOMATIC STOPPING DEVICE

6.1 The automatic stopping devices shall be fitted in the ships specified in 5.1.2 and shall stop any discharge overboard of an oily mixture when the bilge alarm referred to in 5.2 activates.

6.2 The automatic stopping device shall consist of a valve arrangement installed in the effluent outlet line of the bilge separator. The device automatically diverts oily water from being discharged overboard back to the ship's bilges or a bilge water holding tank when the oil content of the effluent exceeds the values specified in 4.1.5.

7 PUMPING, PIPING AND DISCHARGE ARRANGEMENTS FOR OILY MIXTURE

7.1 GENERAL

7.1.1 Oily mixture pumping, piping and discharge arrangements, hydraulic tests of the piping and fittings shall comply with the requirements of Part VIII "Systems and Piping" of the RS Rules/C.

7.2 REQUIREMENTS FOR OILY MIXTURE TRANSFER AND DISCHARGE SYSTEMS

7.2.1 Oil tankers.

7.2.1.1 Equipment and arrangements for transfer and discharge of oily mixtures from oil tankers, as well as from the ships having cargo spaces, which are constructed and utilized to carry oil of aggregate capacity of 200 m^3 and more, shall include the following:

.1 discharge manifolds for discharge of oily mixtures (dirty ballast water, washing water, etc.) to reception facilities;

.2 means to drain all cargo pumps and all oil lines at the completion of cargo discharge;

.3 stripping devices;

.4 where sea chest that is permanently connected to the cargo pipeline systems is provided, a valve on the sea chest and inboard isolation valve on the connecting pipeline shall be provided. Additionally, a device shall be provided that is installed in the pipeline system in order to prevent, under all circumstances, the section of pipeline between the sea chest valve and the inboard valve being filled with cargo.

7.2.2 All ships including oil tankers.

7.2.2.1 In every ship provision shall be made for a pipeline to discharge bilge water of machinery spaces and oil residue (sludge) to reception facilities the discharge connections of which shall have flanges of standard dimensions in accordance with Fig. 7.2.2.1.

The pipeline may be led to one side of the ship provided that it is possible to ensure the discharge on the both sides.

The discharge manifolds shall be located in places convenient for connection of hoses and shall have nameplates. The discharge manifolds shall be provided with blank flanges.

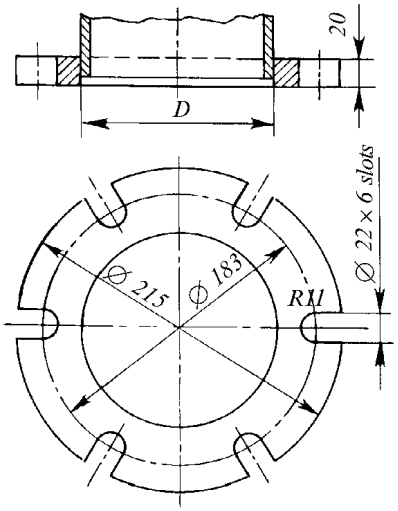

Fig. 7.2.2.1

N o t e . The flange is designed to accept pipes up to the maximum inner diameter of 125 mm and shall be of steel or other equivalent material having a flat face. This flange, together with a gasket of oil proof material, shall be suitable for a service pressure of 0,6 MPa. The flange is connected by six bolts of suitable length and of 20 mm in diameter each.

The high-speed craft of under 400 gross tonnage and other ships of under 200 gross tonnage the design features of which do not allow the installation of a system of pipelines for discharge and/or installation of own discharge facilities considering 8.1.2 and 8.2.2, such pipelines and facilities may not be fitted, if the delivery of bilge water and oily waters residues is provided to the reception facilities by alternative methods being not less effective. Pumping

devices of reception facilities may apply as discharge devices on the specified ships if pipeline system for discharge is installed.

The stop valve in the discharge system of oily mixtures and in the system for discharge of treated bilge waters shall be capable of being sealed.

7.2.2.2 The pump discharge pipelines of the oily bilge water of machinery spaces and oil residue (sludge) running to the discharge connections with flanges of standard dimensions (standard connections) specified in 7.2.2.1, shall have no connections with ship's systems except for the connections with the systems specified in 3.2 of Part II "Ship's Construction, Equipment and Arrangements for the Prevention of Pollution by Oil" (Annex I MARPOL 73/78) of the Certificate (Form 2.4.18RF).

7.2.2.3 System of oily bilge water of machinery spaces shall not be used to drain other ship's spaces such as cargo holds chain lockers.

7.2.2.4 The possibility to start and to stop the discharge arrangements manually shall be provided in order to discharge bilge water and oil residue to reception facilities.

7.2.2.5 In the vicinity of discharge manifolds, provision shall be made for the discharge observation and remote cut-off position or the effective communication system (such as telephone or radio system) between the observation position and the discharge control position.

7.2.2.6 The discharge observation and remote cut-off position, as well as the communications between the observation position and the discharge control position may be unnecessary in ships of less than 24 m in length. In this case measures shall be taken to prevent any potential discharge of bilge water overboard.

8 HOLDING TANKS

8.1 BILGE WATER TANKS

8.1.1 Every ship taking into consideration 1.1.2 and 1.1.3, Part I "Regulations for Technical Supervision" (except for the ships having no machinery spaces) shall be fitted with the tank(s) for the bilge water of machinery spaces, which capacity is determined by the calculation of accumulation of oily bilge waters on the particular ship or according to the formulae given in Table 8.1.1 with regard to 8.1.2.

Table 8.1.1

Main engine output *P*, in kW	Tank capacity, in m^3
Up to 1000	4,0
Above 1000 up to 20000	*P*/250
Above 20000	40 + *P*/500

8.1.2 In high-speed craft, ships with a length to the design waterline less than 25 meters and total power output of all engines less than 220 kW as well as in ships of under 400 gross tonnage where structural particulars do not allow to install a bilge water tank, it is allowed to accumulate oily bilge water in the machinery space bilges in the amount that does not contradict with the Stability Booklet, and its subsequent discharge to reception facilities.

8.1.3 The customer-agreed calculation of the aggregate capacity of bilge water tanks or the acceptable capacity of the machinery space bilge wells to be used for accumulating the oily mixtures (where the requirements of 8.1.2 may be applied) with regard to the period of voyage and the ship's operating conditions shall be submitted to the Register.

8.1.4 Ships operating with heavy fuel oil of a relative density greater than 0,94 at 15 °C shall be provided with the bilge water tank(s) fitted with heating facilities to preheat the oily mixture prior to discharge of the tank(s) content(s) through the separator.

8.2 OIL RESIDUE (SLUDGE) TANKS

8.2.1 Any ship of 400 gross tonnage and above, having regard to the type of machinery and length of voyage, shall be provided with oil residue (sludge) tank or tanks, which minimum capacity V_1, in m^3, shall be calculated by the formulae:

.1 for ships which do not carry ballast water in oil fuel tanks:

$$V_1 = K_1 C D \qquad (8.2.1.1)$$

where K_1 = factor equal to:
0,015 (applied to ships constructed on or after 31 December 1990) and
0,01 (applied to the remaining ones) for ships where heavy fuel oil for main engines is purified before use;
0,005 for ships using diesel oil or heavy fuel oil which does not require purification before use;
C = daily fuel oil consumption, in m^3;
D = maximum period of voyage between ports where oil residue (sludge) may be discharged into reception facilities, in days (where the period of voyage is unknown, it shall be adopted equal to 30 days);

.2 for ships for which a building contract is placed, or in the absence of the building contract the keels of which are laid before 1 July 2010, and which are fitted with homogenizers, oil residue (sludge) incinerators or other means for the control of oil residue (sludge) approved by the Register:

V_1 = 50 % of the value stipulated under 8.2.1.1; or

V_1 = 1 m^3 for ships of 400 gross tonnage and above, but less than 4000 gross tonnage or 2 m^3 for ships of 4000 gross tonnage and above, whichever is the greater;

.3 for ships which carry ballast water in fuel oil tanks:

$$V_2 = V_1 + K_2 B \qquad (8.2.1.3)$$

where V_1 = refer to 8.2.1.1 or 8.2.1.2;
K_2 = factor equal to:
0,01 = for heavy fuel oil bunker tanks;
0,005 = for diesel oil bunker tanks;
B = capacity of water ballast tanks which can also be used to carry oil fuel, in t.

8.2.2 Any ship of under 400 gross tonnage equipped with bilge water separators and/or fuel or lubricating oil purification plants whose work results in sludge formation, shall be provided with oil residue (sludge) tank(s) of the minimum capacity according to 8.2.1.

Other ships of the specified gross tonnage having regard to the type of the propulsion system and length of voyage shall be fitted with oil residue (sludge) tanks as far as practicable and possible.

8.2.3 The pipeline system of the holding tank or tanks referred to in 8.2.1 and 8.2.2, shall be provided with a pump intended to discharge their contents into reception facilities, which meets the requirements of 8.2.13. Starting and stopping of the pump shall be effected according to 7.2.2.4, 7.2.2.5 and 7.2.2.6.

8.2.4 The pump discharge pipelines of the system referred to in 8.2.3 shall not be connected to the bilge water piping except for the common pipeline running to the standard discharge connections specified in 7.2.2.1.

However, oil residue (sludge) tanks may be equipped with the arrangements to discharge settled water to tanks of oily bilge water or bilge wells. The arrangements shall be fitted with manually operated self- closing valves and the visual monitoring for the discharge shall be provided.

Moreover, other alternative arrangements which have no direct connection with bilge water piping to discharge settled water from oil residue (sludge) tanks may be enabled to be used.

8.2.5 The oil residue (sludge) tank discharge piping and bilge water piping shall be equipped with non-return valves to prevent oil residues (sludge) from discharging to the bilge water piping, bilge water tank, bilges of machinery spaces and bilge water separator. The above mentioned piping may serve only one purpose: to connect the oil residue (sludge) tank discharge piping and bilge water piping to the standard discharge connection referred to in 7.2.2.1, or any other approved means of disposal.

8.2.6 Piping to and from oil residue (sludge) tanks shall have no direct connection overboard, other than the common pipeline running to standard discharge connections in accordance with 7.2.2.1.

8.2.7 Oil residues (sludge) tanks shall be designed and constructed so as to facilitate their cleaning and discharge of residues to reception facilities.

8.2.8 Where further to the tanks required in 8.2.1, another independent tank for collection of drainage and oil leaks is installed, this tank shall have a capacity specified in Table 8.2.8. Oil accumulated as the result of separator operation may be also discharged to this tank.

Table 8.2.8

Main engine output *P*, in kW	Tank capacity, in m^3
Up to 10000	$20 \times D \times P/10^6$
Above 10000	$D \times [0{,}2 + 7 \times (P - 10\,000)/10^6]$
N o t e . *D* – maximum period of voyage between ports where drainage and oil residue (sludge) may be discharged into reception facilities, in days (where the period of voyage is unknown, it shall be adopted equal to 30 days).	

8.2.9 Where further to the tanks required in 8.2.1, the tank(s) for collection of used oil in ships where the main and auxiliary engines require the complete replacement of lubricating oil in the absence of shore supply, their(its) capacity shall be determined assuming 1,5 m^3 for each 1000 kW of their total output.

8.2.10 The separated dirty water and exhausted control water of fuel oil purifiers shall be discharged into a particular tank for this purpose in order to minimize the influx to the tank for separated sludge. This particular tank shall be located above the double bottom for the purpose of facilitating its drain without the need for a drain pump.

If dirty water and exhausted control water from purifiers are not discharged to a particular tank, and in lieu of this to a tank for separated sludge, the tank shall be located:

above the double bottom for the purpose of the aforementioned draining facilities specified in 8.2.4;

within the double bottom, provided its capacity is sufficient to accumulate both the separated sludge, and the dirty water and exhausted control water.

8.2.11 Wherever possible, the sludge tank shall be located below the heavy fuel oil separator. If this is not possible, the sludge tank shall be situated close to the heavy fuel oil purifier in such a way that the discharge line to the tank can be inclined at the maximum gradient; the pipeline shall, wherever possible, be straight or fitted with large radius elbows.

8.2.12 The sludge tank shall be designed so that oil sludge has free access to the suction line. If this is not possible, the suction opening or the submersible pump shall be arranged so that the oil sludge path to the suction opening is as short as possible.

8.2.13 The pump fit for transferring high viscosity oil sludge shall be self-priming, have means to prevent dry running and a discharge pressure of at least 0,3 MPa.

The pump delivery, in m^3/h, may be determined by the formula

$$Q = V/t \tag{8.2.13}$$

where V = capacity of the oil residue (sludge) tank to be determined by the formulae given in 8.2.1;
t = emptying time equal to 4 h.

In any case the pump delivery rate shall be not less than 2 m^3/h.

8.2.14 Where oil residue (sludge) service tank referred to in 9.3 directly supplies oil residue (sludge) to any other approved means of oil residue (sludge) disposal such as an incinerator, auxiliary boiler suitable for burning oil residue (sludge) or other acceptable means which are prescribed in para 3.2 of Part II "Ship's Construction, Equipment and Arrangements for the Prevention of Pollution by Oil" to the Certificate (Form 2.4.18RF), the above pump for this oil residue (sludge) service tank is not provided to discharge sludge through the standard discharge connection.

The designated pump for oil residue (sludge) disposal through the standard discharge connection may both be used to transfer oil residue (sludge) to any other approved means of oil residue (sludge) disposal and discharge of residues to reception facilities through standard discharge connection.

8.3 CONSTRUCTION AND EQUIPMENT OF HOLDING TANKS

8.3.1 Holding tanks may be independent or built-in. Structural elements of holding tanks shall meet the requirements of Part II "Hull" of the RS Rules/C.

8.3.2 The holding tank shall be provided with:

.1 an access hole for inspection and cleaning;

.2 an air pipe;

.3 a heating system in compliance with 8.3.4 and 8.1.4;

.4 visual and audible alarm operating in case of 80 % filling of the tank;

.5 content level measurement devices.

8.3.3 The inner surfaces of the bottom and the vertical walls of the oil residue (sludge) tank, except for the built-in tanks, as defined in 8.3.1, shall be smooth (external framing). In this case, the bottom shall be inclined towards the spool piece.

8.3.4 Separated sludge tanks shall be equipped with tank heating systems. At that the heating pipes shall be arranged so that, seen from the heating inlet, they are arranged away from the boundaries and then, across the whole bottom area, sufficiently high to avoid being covered totally by sediments in the tank.

The tank heating system shall be designed so as to enable heating of the oil sludge up to 60 °C.

The suction line from the tank to the pump shall be provided with heat tracing.

8.3.5 The manholes of an oil residue (sludge) tank shall provide access to any area of the tank. One of the manholes shall be located at the top of the tank to ensure using a submersible pump.

8.3.6 Provision shall be made for the oil residue (sludge) tank to be steamed for its cleaning without the need to open the tank manholes.

8.3.7 For category A and B ships constructed on or after 1 January 2017, operating within Arctic Waters as defined by the Polar Code (refer to IMO resolution MEPC.264(68)), all oil residue (sludge) tanks and oily bilge water holding tanks shall be separated from the outer shell by a distance of not less than 0,76 m. This provision does not apply to small oil fuel tanks with a maximum individual capacity not greater than 30 m^3.

9 OTHER MEANS FOR REMOVAL OF OIL RESIDUES (SLUDGE)

9.1 Other means for removal of oil residue (sludge) may include the following oil residue (sludge) incineration systems:

main and auxiliary steam boilers with appropriate oil residue (sludge) processing systems;

heaters of thermal liquid systems with appropriate oil residue (sludge) processing systems;

incinerators with appropriate oil residue (sludge) processing systems designed for residues incineration;

inert gas systems with appropriate oil residue (sludge) processing systems.

9.2 Oil residue (sludge) processing system shall consist of the following:

oil residue (sludge) service tank intended as servicing the oil residue (sludge) incineration system;

oil residue (sludge) preheating system;

filter; and

homogenization system.

9.3 Oil residue (sludge) service tanks shall be equipped with suitable drainage facilities and fuel oil supply connections with a view to improving combustibility and calorific value (refer to IMO resolution MEPC.I/Circ.642). The above tank shall be provided in addition to oil residue (sludge) tanks and shall be specified in 3.1 of Part II "Ship's Construction, Equipment and Arrangements for the Prevention of Pollution by Oil" to the Certificate (Form 2.4.18RF).

9.4 The homogenization system shall assure that the entire contents of the oil residue (sludge) service tank shall be processed into a homogeneous and combustible mixture. This system shall be put into operation following adequate draining of the tank. The devices for continuous indication and monitoring of the water content of the oil residue (sludge) shall be provided.

10 FUEL OIL TANKS PROTECTION

10.1 DEFINITIONS

10.1.1 In the present Section the following definitions have been adopted.

Small fuel oil tank means a fuel oil tank with a maximum individual capacity not greater than 30 m^3.

A ship delivered on or after 1 August 2010 means a ship:

for which the building contract is placed on or after 1 August 2007; or

in the absence of a building contract, the keel of which is laid or which is at a similar stage of construction on or after 1 August 2008; or

the delivery of which is on or after 1 August 2010; or

which has undergone a major conversion after the date of placing the contract, or beginning the construction work, or completing that work, corresponding to the above dates during the construction accordingly.

Fuel oil tank means a tank for carrying fuel oil for the main and auxiliary machinery, except overflow tanks.

10.2 REQUIREMENTS

10.2.1 In ships delivered on or after 1 August 2010, as defined in 10.1, fuel oil tanks shall be located as follows:

.1 for ships having an aggregate fuel oil capacity of 600 m^3 and above, fuel oil tanks shall be located above the moulded line of the bottom shell plating with the exception of self-elevated mobile offshore drilling units nowhere less than the distance *h* as specified below:

h = *B*/20 m, or

h = 2,0 m, whichever is the lesser.

The minimum value of *h* = 0,76 m.

In turn of the bilge area and at locations without a clearly defined turn of the bilge, the fuel oil tank boundary shall run parallel to the line of the midship flat bottom as shown in Fig. 3.8.3.1;

.2 for ships having an aggregate fuel oil capacity of 600 m^3 and above, but less than 5000 m^3, fuel oil tanks shall be located inboard of the moulded line of the side shell plating everywhere at a distance not less than the value of *w* which, as shown in Fig. 3.8.3.2, is measured at any cross-section at a right angle to the side plating:

$$w = 0{,}4 + 2{,}4C/20000 \text{ m, or} \qquad (10.2.1.2)$$

the minimum value of $w = 1{,}0$ m, however for individual tanks with a fuel oil capacity of less than 500 m^3 the minimum value of *w* = 0,76 m;

.3 for ships having an aggregate fuel oil capacity of 5000 m^3 and above, fuel oil tanks shall be located inboard of the moulded line of the side shell plating nowhere less than the distance of the value of *w* which, as shown in Fig. 3.8.3.2, is measured at any cross-section at right angles to the side shell as specified below:

$$w = 0{,}5 + C/20000 \text{ m, or} \qquad (10.2.1.3)$$

$w = 2{,}0$ m, whichever is the lesser.

The minimum value of $w = 1{,}0$ m.

.4 having regard to the type of the ship, and in case of impossibility to provide structural protection, alternatively to the requirements prescribed above, ships shall comply with the accidental oil fuel outflow performance standard according to regulation 12A.11 of Annex I to MARPOL 73/78.

10.2.2 The provisions of 10.2.1 apply to all fuel oil tanks, except small fuel oil tanks, provided that the aggregate capacity of such tanks is not greater than 600 m^3.

In case when the aggregate oil fuel capacity is less than 600 m^3, the provisions of regulation 10.2.1 shall not apply to all oil fuel tanks.

10.2.3 For category A and B ships constructed on or after 1 January 2017 with an aggregate oil fuel capacity of less than 600 m^3, operating within Arctic Waters as defined by the Polar Code (refer to IMO resolution MEPC.264(68)), all oil fuel tanks shall be separated from the outer shell by a distance of not less than 0,76 m. This provision shall not apply to small oil fuel tanks with a maximum individual capacity not greater than 30 m^3.

10.2.4 Suction wells in fuel oil tanks may protrude into the double bottom below the boundary line defined by the distance *h*, provided that the distance between the well bottom and the bottom shell plating is not less than 0,5*h*. The suction wells shall be as small as practicable and shall be dimensioned in proportion to a suction pipe and covered area.

10.2.5 Lines of fuel oil piping located at a distance from the ship's bottom of less than *h*, as defined in 10.2.1.1, or from the side shell plating less than the value of *w*, as defined in 10.2.1.2 and 10.2.1.3, shall be fitted with stop valves within or immediately adjacent to the fuel oil tank. These valves shall be capable of being brought into operation from a readily

accessible enclosed space the location of which is accessible from the navigating bridge or a main machinery control room without traversing exposed freeboard or superstructure decks. The valves shall be closed in case of remote control system failure and shall be kept closed at any time while operating when the tank contains fuel oil except that they may be opened during fuel oil transfer operations.

10.2.6 The provisions of 10.2.4 on the arrangement of fuel oil suction wells may be applied to the location of valves on fuel oil tank pipelines in the same way, namely: these valves may be located at a distance from the bottom shell plating of less than *h*/2 (refer to Fig. 10.2.6).

10.2.7 Air or overflow pipes of fuel oil tanks shall not be considered as part of fuel oil piping and therefore may be located at a distance of less than the value of *w* from the side shell plating (refer to Fig. 10.2.6).

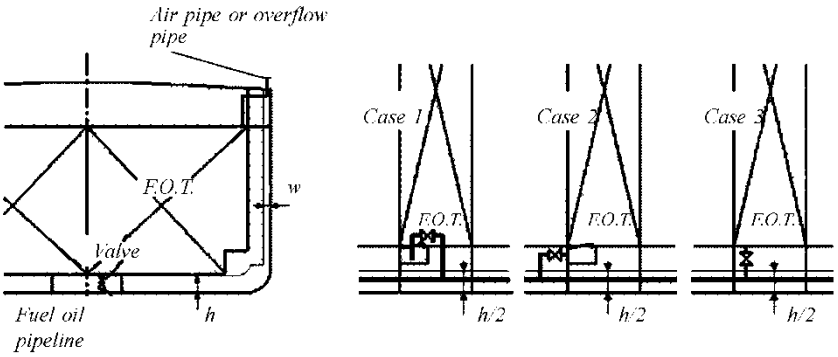

Fig. 10.2.6:
h – minimum value of distance of fuel oil tanks location from the moulded line of the bottom shell plating, in m;
w – minimum value of distance of fuel oil tanks location from the moulded line of the side shell plating, in m;
F.O.T. – fuel oil tank

11 REQUIREMENTS FOR FLOATING AND FIXED PLATFORMS

11.1 The requirements of this Part cover only the discharge of machinery space drainage and contaminated sea water taken into oil tanks, floating and fixed platforms.

11.2 MODU, FOP, FPU and other floating or fixed platforms shall comply with the requirements of this Part applicable to ships of 400 gross tonnage and above other than oil tankers, except for those specified in regulation 39.2 of Annex I to MARPOL 73/78.

11.3 In applying the requirements for the protection of fuel tanks specified in 10.2.1 (regulation 12A of Annex I to MARPOL 73/78) for a MODU with a column-stabilized units in accordance with the MODU Code, for the purpose of determining the location oil fuel tanks, the following is assumed:

only those columns, underwater hulls and braces on the periphery of the unit shall be assumed to be damaged and the damage shall be assumed in the exposed portions of the columns, underwater hull and braces;

columns and braces shall be assumed to be damaged at any level between 5,0 m above and 3,0 m below the range of draughts in the MODUs operating manual for normal and severe weather operations; and

underwater hull and footings shall be assumed to be damaged when operation in a transit condition in the same manner as indicated above, having regard to their shape.

11.4 During survey of FPU fitted as Floating Production, Storage and Offloading (FPSO) facilities or Floating Storage Units (FSUs) in accordance with IMO resolution MEPC.311(73) "The 2018 Guidelines for the Application of MARPOL Annex I Requirements to FPSOs and FSUs" for compliance with MARPOL Annex I, in addition to the requirements of regulation 39.2 of Annex I, the provisions of this resolution shall be taken into consideration.

11.5 FPU (FPSO and FSO) shall not be considered as offshore terminals and are not intended for reception of contaminated ballast and washing water from tankers under loading or unloading operations.

PART III. SHIP'S CONSTRUCTION, EQUIPMENT AND ARRANGEMENTS FOR THE PREVENTION OF POLLUTION BY NOXIOUS LIQUID SUBSTANCES IN BULK

1 DEFINITIONS

1.1 Definitions and explanations pertinent to the general terminology of the Rules are given in Part I "Classification" of the RS Rules/C.

In the present Part the following definitions have been adopted.

Noxious liquid substances mean substances of categories X, Y or Z indicated in the Pollution Category column of chapters 17 or 18 of the IBC Code, or provisionally assessed under the provisions of regulation 6.3 of Annex II to MARPOL 73/78 as falling into these categories taking into account the current MEPC.2/Circular "Provisional Categorization of Liquid Substances in Accordance with MARPOL Annex II and the IBC Code".

Other substances mean substances indicated as OS (other substances) in the pollution category column of Chapter 18 of the IBC Code which have been evaluated and found to fall outside Category X, Y or Z, because they are, at present, considered to present no harm to marine resources, human health, amenities or other legitimate uses of the sea when discharged into the sea from tank cleaning or deballasting operations.

Liquid substance means a substance having a vapour pressure not exceeding 0,28 MPa absolute at a temperature of 37,8 °C.

Category X means noxious liquid substances which, if discharged into the sea from tank cleaning or deballasting operations, are deemed to present a major hazard to either marine resources or human health and, therefore, justify the prohibition of the discharge into the marine environment.

Category Y means noxious liquid substances which, if discharged into the sea from tank cleaning or deballasting operations, are deemed to present a hazard to either marine resources or human health or cause harm to amenities or other legitimate uses of the sea and, therefore, justify a limitation on the quality and quantity of the discharge into the marine environment.

Category Z means noxious liquid substances which, if discharged into the sea from tank cleaning or deballasting operations, are deemed to present a minor hazard to either marine resources or human health and, therefore, justify less stringent restrictions on the quality and quantity of the discharge into the marine environment.

NLS tanker means any ship constructed or adapted to carry a cargo of noxious liquid substances in bulk, and includes an "oil tanker" as defined in Annex I to MARPOL 73/78 when certified to carry a cargo or part cargo of noxious liquid substances in bulk.

Residue means any noxious liquid substance which remains for disposal.

Underwater discharge outlet means an outlet for discharging the mixtures of noxious liquid substance residue and water.

Persistent floater means a slick forming substance with the following properties:

density: ≤ sea water (1025 kg/m^3 at 20 °C);

vapour pressure: ≤ 0,3 kPa;

solubility: ≤ 0,1 % (for liquids) ≤ 10 % (for solids);

kinematic viscosity: > 10 cSt at 20 °C.

Chemical tanker means any ship constructed or adapted for the carriage in bulk of any liquid product listed in Chapter 17 of the IBC Code.

2 SCOPE OF TECHNICAL SUPERVISION

2.1 The types and scope of surveys, as well as the guidelines on the documents issued by the Register are given in Part I "Regulations for Technical Supervision".

3 CONSTRUCTION OF SHIPS CARRYING NOXIOUS LIQUID SUBSTANCES AND DANGEROUS CHEMICALS IN BULK

3.1 The construction of ships carrying noxious liquid substances in bulk shall comply with the requirements of the Rules for the Classification and Construction of Chemical Tankers[1].

3.2 For category A and B ships constructed on or after 1 January 2017, operating within Arctic Waters as defined by the Polar Code (refer to IMO resolution MEPC.264(68)), the carriage of noxious liquid substances (NLS) identified as ship type 3 in compliance with 2.1.2 of the International Code for the Construction and Equipment of Ships Carrying Dangerous Chemicals in Bulk (IBC Code) or identified as NLS specified in Chapter 18 of IBC Code in cargo tanks of type 3 ships shall be separated from the outer shell by a distance of not less than 0,76 m.

[1] Hereinafter referred to as "the Chem Rules".

4 REQUIREMENTS FOR THE EQUIPMENT OF SHIPS CARRYING NOXIOUS LIQUID SUBSTANCES AND DANGEROUS CHEMICALS IN BULK

4.1 CARGO TANK WASHING ARRANGEMENTS

4.1.1 **Cargo** tank washing arrangements shall have an approved structure. The washing arrangements shall be selected in compliance with an applicable prewash procedure specified in Appendix VI to Annex II to MARPOL 73/78 as amended by IMO resolution MEPC.315(74).

4.2 PUMPING AND PIPING OF STRIPPING SYSTEM

4.2.1 Every ship covered by Annex II to MARPOL 73/78 shall be provided with a piping and pumping arrangement to ensure that each tank certified for the carriage of substances in Category X, Y or Z does not retain a quantity of residue in excess specified in this Annex. Only in such a case the tank shall be approved for the carriage of substances of the Categories.

4.2.2 The definition of the residue quantity in cargo tanks, pumps and its associated piping shall be carried out using water tests in compliance with Appendix V to Annex II to MARPOL 73/78.

4.3 DISCHARGE AND DISPOSAL SYSTEMS FOR RESIDUES

4.3.1 To carry out standard discharge of effluent containing residues of substances in in Category X, Y or Z the certified ships shall have an underwater discharge outlets

4.3.2 For ships constructed before 1 January 2007 and certified to carry substances in Category Z an underwater discharge outlet is not mandatory.

4.3.3 The underwater discharge outlet (or outlets) for discharge the residue of noxious liquid/water mixture shall be located below the waterline (at any operational draughts) within the cargo area in the vicinity of the turn of the bilge. If dual outlets are provided, they shall be located on the opposite sides of the ship, as specified above.

4.3.4 The underwater discharge outlet shall be arranged so as to avoid the intake of noxious liquid substances by the ship's pumps through sea openings.

4.3.5 The underwater discharge outlet (or outlets) arrangement shall be such that the residue/water mixture discharged into the sea will not pass the ship's boundary layer.

To this end, when the discharge is made normal to the ship's shell plating, the minimum diameter of the discharge outlet is governed by the following formula:

$$d = Q_d/5L_d \qquad (4.3.5)$$

where d – minimum diameter of the distance outlet, in m;
L_d – distance from the forward perpendicular, in m;
Q_d – the maximum rate selected at which the ship may discharge a residue/water mixture through the outlet, in m^3/h.

When the discharge is directed at some angle to the ship's shell plating, the above formula shall be modified by substituting for Q_d the component of Q_d which is normal to the ship's shell plating.

4.3.6 Where the underwater discharge outlet is available, it shall be used only in the sea areas outside inland waterways.

4.3.7 Approved ventilation procedures may be used to remove cargo residues from a tank. The procedures shall be applied in compliance with Appendix VII to Annex II to MARPOL 73/78.

4.3.8 Ventilation equipment producing an airjet which can reach the tank bottom and remove cargo residues shall be used. Fig. 4.3.8 could be used to evaluate the adequacy of ventilation equipment used for ventilating a tank at a given depth. Ventilation equipment shall be placed in the tank opening closest to the tank sump or suction point. Ventilation equipment shall, when practicable, be positioned so that the airjet is directed at the tank sump or suction point and impingement of the airjet on tank structural members is to be avoided as much as possible.

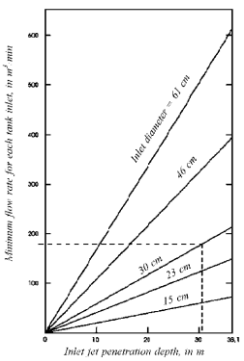

Fig. 4.3.8
Minimum flow rate as a function of jet penetration depth

4.3.9 Ventilation equipment shall produce an air jet, which can reach the tank bottom. The minimum flow rate of the ventilation equipment as a function of the jet penetration depth is shown in Fig. 4.3.8.

4.3.10 For ships whose constructional and operational features are such that ballasting of cargo tanks is not required and cargo tank washing is only required for repair or dry-docking, the provisions of regulations on underwater discharge outlet may be omitted, provided that the following conditions are complied with:

any effluent from tank washings is discharged to a reception facility;

the Certificate for the Prevention of Pollution from Ships (Form 2.4.18RF) indicates that each cargo tank is certified for the carriage of a restricted number of substance without intermediate cleaning;

the ship carries the Procedures and Arrangements Manual approved by the Register.

4.4 CARGO PUMP ROOMS

4.4.1 Cargo pump rooms shall comply with the following requirements of the Chem Rules: Section 4, Part II "Structure of Chemical Tanker"; Section 2, Part V "Fire Protection" and Section 18, Part XII "Special Requirements".

4.4.2 The control station of a system for draining pump rooms shall be located outside the pump rooms.

4.4.3 The system for drainage of pump rooms shall ensure the transfer of leakages into a slop or cargo tank.

4.5 SLOP TANKS

4.5.1 Although the fitting of dedicated slop tanks is not required, slop tanks may be needed for certain washing procedures. Cargo tanks may be used as slop tanks.

5 STABILITY INSTRUMENT

5.1 Each chemical tanker shall be fitted with a stability instrument capable of verifying compliance with the applicable intact and damage stability requirements in compliance with IMO Resolution MEPC.250(66).

6 CARRIAGE OF VEGETABLE OILS

6.1 The carriage of single vegetable oils identified by the relevant footnote in Chapter 17 of the IBC Code is permitted if a chemical tanker meets all the requirements for a type 2 ship specified in the IBC Code.

As specially decided by the RF Administration, the carriage of vegetable oils may be permitted on the chemical tanker meeting all the requirements for ship type 3 except for cargo tanks location. In this case, the entire cargo tank length shall be protected by ballast tanks or spaces other than tanks that carry oil as follows:

.1 wing tanks or spaces shall be arranged such that cargo tanks are located inboard of the moulded line of the side shall plating nowhere less than 760 mm; and

.2 double bottom tanks or spaces shall be arranged such that the distance between the bottom of the cargo tanks and the moulded line of the bottom shell plating measured at right angles to the bottom shell plating is not less than *B*/15 m or 2,0 m at the centreline, whichever is the lesser. The minimum distance shall be 1,0 m.

6.2 In accordance with IMO resolution MEPC.148(54) dry cargo ships are certified to carry some vegetable oils in deep tanks or independent tanks specially designed for this purpose. The products allowed to be carried are restricted to those unmodified vegetable oils (primarily triglycerides), which are listed in the IBC Code with the indication of pollution hazard only.

6.2.1 The following criteria on construction and carriage shall apply to the above dry cargo ships:

.1 independent tanks for the carriage of vegetable oils shall be located at least 760 mm from the ship's side shell plating;

.2 carriage of vegetable oils in independent tanks or in deep tanks shall be restricted to the trades specially identified by the RF Administration.

6.2.2 Every such dry cargo ship shall have on board the approved Procedures and Arrangements Manual in compliance with Appendix IV of Annex II to MARPOL 73/78.

7 REQUIREMENTS FOR EQUIPMENT OF SHIPS OTHER THAN CHEMICAL TANKERS

7.1 Ships other than chemical tankers or ships for transport of noxious liquid substances in bulk, such as supply vessels, shall comply with the applicable provisions of IMO resolution A.1122(30). Dry cargo ships permitted for the transport of vegetable oils in bulk shall comply with the applicable provisions of IMO resolution MEPC.148(54).

7.2 Ships other than chemical tankers or bulk carriers for the transport of noxious liquid substances, engaged in carriage of noxious liquid substances in bulk, shall be designed and equipped in such a way as to minimize uncontrolled discharge of such substances to the sea.

7.3 Technical substantiation of the possibility and conditions of carriage of noxious liquid substances in bulk agreed with the shipowner shall be submitted to the Register for approval. The substantiation shall consider the category of substance intended for the carriage on board the ship, extent of equipment available on the ship and contain a list of technical and organizational requirements to be met on the ships carrying noxious liquid substances specified in the IBC Code.

7.4 The provisions of 7.3 may not apply to ships for which carriage of noxious liquid substance is provided by the ship's purpose, and the requirements given in 7.3 shall be considered and approved in the technical documentation for the ship.

7.5 The provisions of this Chapter shall not cover processing effluents from fishing and fish processing vessels formed due to processing of sea fishery products except fish oil discharge. Adherence to the performance requirements as regards these effluents refers to the shipowner's competence.

7.6 Regulation 4.1.3 of Annex II to MARPOL73/78 may be applied to fish transport ships carrying fish oil. In compliance with the above Regulation the RF Administration may allow carriage of vegetable oils and fish oil on board type 3 ships, provided compliance with this rule requirement for cargo tank location as regards to shell plating.

7.7 These requirements need not be applied to fishing vessels the processing equipment of which is intended for manufacture and storage of fish oil, however, the following requirements shall be met:

means of fish oil storage and discharge shall be approved by the Register in the scope of ship's design;

any discharge of fish oil including cargo residues, washings and waste water after fish oil separator, containing fish oil, except the cases specified in Regulation 3 of Annex II to MARPOL 73/78;

any effluent from washings of fish oil tank is discharged to a reception facility;

Procedures and arrangement manual approved by the Register shall be available on board. These Guidelines shall contain technical substantiation of the possibility and conditions of fish oil storage on the ship. The substantiation shall consider the extent of equipment available on the ship and contain a list of technical and organizational requirements to be met for prevention pollution of sea by noxious substances;

fish oil discharge operations shall be recorded in the relevant ship's log.

Part III "Ship's Construction, Equipment and Arrangements for the Prevention of Pollution by Noxious Liquid Substances in Bulk" (Annex II to MARPOL 73/78) of the Certificate (Form 2.4.18RF) shall not be filled in for the fishing vessel. However, at the approval of the Procedures and arrangement manual and survey of the ship in accordance with this document a Report shall be issued (Form 6.3.10).

PART IV. SHIP'S EQUIPMENT AND ARRANGEMENTS FOR THE PREVENTION OF POLLUTION BY SEWAGE

1 DEFINITIONS

1.1 In the present Part of the Rules the following definitions have been adopted.

New passenger ship means a ship:

for which the building contract is placed, or in the absence of a building contract, the keel of which is laid, or which is in a similar stage of construction, on or after 1 June 2019; or

the delivery of which is performed on or after 1 June 2021.

Passenger ship means a ship which carries more than twelve passengers.

Holding tank means a tank used for the collection and storage of untreated sewage, activated sludge and pulp from the sewage and/or sanitary and domestic waste waters treatment plant.

Sewage comminution and disinfection system means a plant, in which sewage is disinfected and the solid particles contained therein are comminuted.

Sewage means:

drainage and other wastes from any form of toilets, urinals and WC scuppers;

drainage from medical premises (dispensary, sick bay, etc.) via wash basins, wash tubs and scuppers located in such premises;

drainage from spaces containing living animals;

other waste waters when mixed with the drainages defined above.

Sewage treatment plant means a plant, in which sewage and, if applicable, sanitary and domestic waste waters are treated and disinfected.

Sanitary and domestic waste waters mean:

drainage from the wash basins, showers, laundries, wash tubs and scuppers; drainage from sinks and equipment of galleys and spaces annexed to galleys.

Number of persons on board means crew and special personnel and passengers, which the ship is certified to carry.

Sewage sludge means insoluble residues generated during the treatment of sewage in a sewage treatment plant on board.

2 SCOPE OF TECHNICAL SUPERVISION

2.1 The types and scope of surveys, as well as the guidelines on the documents issued by the Register are given in Part I "Regulations for Technical Supervision".

3 EQUIPMENT FOR COLLECTION, STORAGE, TREATMENT AND DISCHARGE OF SEWAGE, AND SANITARY AND DOMESTIC WASTE WATERS

3.1 GENERAL

3.1.1 Every ship specified in 1.1.1, Part I "Regulations for Technical Supervision" and which is not unmanned shall be provided with one of the following systems:

.1 sewage treatment plant of an approved type, holding tank(s) for the storage of untreated sewage and holding tank(s) for the storage of sanitary and domestic waste waters;

.2 holding tank(s) for the storage of all untreated sewage and holding tank(s) for the storage of sanitary and domestic waste waters.

3.1.2 Every ship operating only in sea areas, may be provided, instead of the systems specified in 3.1.1, with the Register-approved sewage comminution and disinfection system and holding tank(s) for the storage of untreated sewage and holding tank(s) for the storage of sanitary and domestic waste waters.

3.1.3 It is acceptable to have on board common tank(s) for the storage of untreated sewage and sanitary and domestic waste waters. In this case, discharge from this tank in sea areas shall be performed in compliance with the rules for sewage discharge.

3.1.4 In case of its operation in the RF Arctic waters within the boundaries defined by the Polar Code in IMO resolution MEPC.264(68), each ship shall be fitted in compliance with Chapter 4 of Part II-A of Polar Code.

3.1.5 Piping, electrical equipment and automation devices shall comply with the requirements in Part VIII "Systems and Piping", Part IX "Electrical Equipment" and Part XV "Automation" of the RS Rules/C.

3.2 HOLDING TANKS

3.2.1 The customer-agreed calculation of the total capacity of holding tanks having regard to the intended area of navigation, operation of the ship and the number of persons on board shall be submitted to the Register.

3.2.2 Holding tanks may be independent or built-in. The structural elements of holding tanks shall comply with the requirements in Part II "Hull" of the RS Rules.

3.2.3 Holding tanks shall be made of steel. The inner surfaces of the tanks shall be smooth (except for built-in tanks), protected against the medium effect and have their bottom inclined towards drain pipes where it is practicable. The holding tanks shall be provided with manholes and fitted with arrangements for water washing. Arrangements for sewage agitation are recommended.

3.2.4 Holding tanks shall be separated with cofferdams from potable, washing and feed water tanks, vegetable oil tanks, as well as from accommodation, service (utility) and cargo spaces. No cofferdams are required between holding tanks and engine and cargo spaces if the latter are not used for carrying food raw material and foodstuffs.

The holding tank may be placed in a single space having forced exhaust ventilation.

3.2.5 Holding tanks shall be tested at a proof pressure equal to 1,5 times the water column pressure measured from the tank bottom to the lower sanitary unit having no lock in a discharge pipeline, but not less than 25 kPa.

3.2.6 Holding tanks shall be provided with visual and audible alarm activated at their filling by 80 per cent, as well as with means to indicate visually the amount of its contents.

3.2.7 If sewage water treatment plant is installed, and if its work results in generation of sewage sludge subject to removal, the capacity of sewage holding tank shall ensure collection of residues taking into account the sludge volume when a separate holding tank for sludge is not provided.

3.2.8 If a separate tank for collection of sewage sludge is provided, its volume shall ensure accumulation of sludge within the voyages considering conditions of ship operation. Design quantity of sludge generation is taken equal to 0,8 — 1,0 % from the volume of treated sewage waters if there is no data from the manufacturer of sewage water treatment plant.

3.2.9 For high-speed craft as well as for ships with the length less than 25 meters, whose structural particulars do not allow to install holding tanks for sewage water storage, accumulation of sewage water may be allowed in holding tanks of portable toilets placed in water closets equipped with artificial or natural exhaust ventilation of sufficient capacity with further discharge of these sewage waters into reception facilities. The specified equipment shall be made for these purposes, equipped with devices for sealing of openings and manholes and have relevant marking, maintenance instructions and possibility of transportation.

3.2.10 Minimum volume of generated sewage and domestic waste waters (grey waters) should be determined using recommended specific accumulation values given in Table 3.2.10. It is allowed to apply other accumulation values based on the experience of operation of similar ships, number of persons onboard, consideration of area of navigation and operating conditions.

Table 3.2.10

No.	Designation	Units	Specific accumulation value for:			
			passenger ships	cargo ships	Ships engaged in voyages of less than 24 hours	Ships with continuous presence of people on board less than 12 hours per day
1	Sewage	l/ (person a day)	25 for vacuum systems 50 for gravity systems			3
2	Domestic waste waters (Grey water)		300	150	50	7

3.3 SEWAGE TREATMENT PLANTS

3.3.1 The capacity of the sewage treatment plant, in litres per day, shall be determined by the formula

$$Q = nq \tag{3.3.1}$$

where n = number of persons;
q = daily amount of sewage and, if applicable, sanitary and domestic waste waters per a person, in litres (according to the current standard).

3.3.2 Except for the sewage treatment plants specified in 3.3.3, the sewage treatment plants shall be in compliance with IMO resolution MEPC.227(64) with the exception of the requirements in 4.2 of the resolution on nitrogen and phosphorous removal standard in the following cases:

.1 installations on board ships the keels of which are laid or which are at a similar stage of construction on or after 1 January 2016;

.2 for other ships, installations not specified in 3.3.2.1 with a contractual delivery date to the ship on or after 1 January 2016 or, in the absence of a contractual delivery date, the actual delivery of the equipment to the ship on or after 1 January 2016.

In all other cases the sewage treatment plants shall be in compliance with IMO resolution MEPC.159(55).

3.3.3 In addition to the requirements of 3.3.2 the sewage treatment plants in the new passenger ships operating in the special area of the Baltic sea under amendments to Annex IV to MARPOL 73/78 (refer to IMO resolution MEPC.200(62)) assuming the discharge of sewage in this area on or after 1 June 2019 shall be in compliance with 4.2 of IMO resolution MEPC.227(64) from that date providing effluent standards specified in Table 3.3.3.

3.3.4 The sewage treatment plants in existing passenger ships operating in the Special area of the Baltic sea from which is assumed the discharge of sewage in this area on or after 1 June 2021 shall be in compliance with 3.3.3 from that date.

3.3.5 The sewage treatment plants in existing passenger ships en route directly to or from a port located outside the Special Area and to or from a port located east of longitude 28°10' E within the Special Area that do not make any other port calls within the Special Area from which is assumed to discharge sewage in the area on or after 1 June, 2023 shall comply with 3.3.3 of that date.

Table 3.3.3

Normalizable characteristics	Sewage treatment plants specified in 3.3.3
Suspended solids in mg/l	< 35 Qi/Qe
BOD_5, мg/l	< 25 Qi/Qe
Thermotolerant coliforms per 100 ml	< 100
Residual chlorine, in mg/l	< 0,5
COD, in mg/l	< 125 Qi/Qe
Effluent pH factor	6 — 8,5
Nitrogen content, in mg/l	20 Qi/Qe
Phosphorous content, in mg/l	1,0 Qi/Qe
N o t e : suspended solid is a geometric mean of total suspended solids; BOD_5 is a geometric mean of 5-day biochemical oxygen demand; COD is a geometric mean of chemical oxygen demand; Effluent pH factor is degree of water acidity/alkalinity. Nitrogen content is a geometric mean of total nitrogen content; Phosphorous content means a geometric mean of total phosphorous content; Qi means amount of waters for treatment upstream the plant; Qe means amount of treated waters downstream the plant.	

3.3.6 Sewage treatment plants shall be tested for tightness in accordance with 3.2.5. Pipelines shall be subjected to a hydraulic test pressure equal to $p_t = 1{,}5p$ (where p is a working pressure).

3.3.7 Sewage treatment plants may be located in engine rooms or in separate spaces provided with effective forced exhaust ventilation.

3.3.8 Provision shall be made for an effective washing and disinfection system for serving sewage treatment plants, their machinery and piping, and for plants inspection and repairs.

3.3.9 Sewage treatment plants shall be designed to be able to collect samples of treated waters.

3.4 SEWAGE COMMINUTION AND DISINFECTION SYSTEMS

3.4.1 The sewage comminution and disinfection systems shall comply with the requirements of 3.3.1 and 3.3.6.

3.4.2 The holding tanks associated with the system shall comply with the requirements of 3.2.

3.4.3 The sewage comminution and disinfection systems shall ensure disinfection rate standards.

3.5 ARRANGEMENTS FOR SEWAGE, AND SANITARY AND DOMESTIC WASTE WATERS DISCHARGE

3.5.1 In every ship, provision shall be made for a pipeline for discharge of sewage and sanitary and domestic waste waters to reception facilities considering the information in 3.2.9.

The pipeline shall be led to both sides of the ship. It is allowed the pipeline be led out in one place, provided that sewage is possible to ensure the discharge on the both sides. The discharge manifolds shall be located in places convenient for connection of hoses and shall be fitted with standard discharge connections with flanges in compliance with Fig. 3.5.1 except for specified one in 3.5.5 when pumping arrangements of reception facilities are used as discharge devices, and also shall be provided with nameplates.

The discharge manifolds shall be provided with blank flanges.

In ships performing regular voyages, such as passenger ferries, the drain connections can be fitted with quick couplings according to the International Standard EN1306:2018.

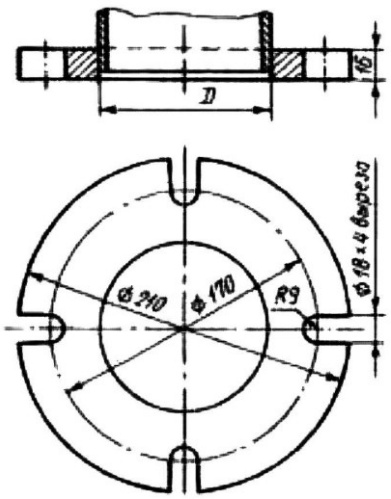

Fig. 3.5.1

N o t e . The flange is designed to accept pipes up to a maximum inner diameter of 100 mm and shall be of steel or other equivalent material having a flat face. This flange, together with a suitable gasket, shall be suitable for a working pressure of 0,6 MPa. For ships having a moulded depth of 5 m and less, the inner diameter of the discharge connection may be 38 mm. The flange is connected by four bolts of suitable length and of 16 mm in diameter each.

3.5.2 The possibility to start and to stop manually the discharge arrangements shall be provided in order to discharge sewage water to reception facilities. In the vicinity of discharge manifolds, provision shall be made for the discharge observation and remote cut-off position or the effective communication system (such as telephone or radio system) between the observation position and the discharge control position.

3.5.3 The piping of a system for discharge of sewage and sanitary and domestic waste waters to the reception facilities shall have no connections to the piping of other systems except the specified in 3.5.4.

3.5.4 If the ship is provided with the system in compliance with 3.1.1.1 and this system has the piping fitted with a device for discharge of untreated sewage then in such a case the common piping shall enable to be washed with water.

3.5.5 Provision shall be made for two pumps for discharge of sewage and sanitary and domestic waste waters from holding tanks. One of the pumps may be replaced by an ejector. Taking into account the ship's purpose and service conditions, only one pump may be fitted. For high-speed craft as well as for ships of less than 25 meters in length, pumping arrangements of reception facilities may be used as discharge devices.

3.5.6 The discharge observation and remote cut-off position, as well as the communications between the observation position and the discharge control position may be unnecessary in ships of less than 24 m in length. In this case measures shall be taken to prevent any potential discharge of these waters overboard.

3.5.7 Provision shall be made for a possibility to seal the shut-off valves of discharge piping.

3.5.8 For all ships, with the exception of FOP, MODU, FPU and other platforms that are in operation in a stationary position to provide discharge of untreated sewage that has been stored in holding tanks within the approved for discharge sea areas and within the approved inland waterways (in compliance with the requirements of the RF Administration), the shipowner shall submit the calculated discharge rate to the Register for review.

This calculation shall be based on the standards given in IMO resolution MEPC.157(55).

Calculation of discharge rate shall be based upon the ship’s maximum summer draft and maximum service speed.

Where a ship discharges sewage from a holding tank using a pump calibrated at a fixed capacity, the pump can either be calibrated at a discharge rate permitted at 4 knots, or for a specific minimum ship’s speed in excess of 4 knots.

In case the sewage pump has variable capacity, discharge rate may be increased to the maximum design value corresponding to the relevant ship's maximum summer draft and maximum service speed due to increasing the pump capacity, provided that the ship's speed corresponds to the maximum discharge rate.

In case the above mentioned calculation and devices for discharge of untreated sewage with the approved discharge rate (pumps with appropriate fixed or variable capacity, shut-off and regulating valves, etc.) are unavailable on board, all sewage shall be collected in holding tanks and discharged to reception facilities.

PART V. SHIP'S EQUIPMENT AND ARRANGEMENTS FOR THE PREVENTION OF POLLUTION BY GARBAGE

1 GENERAL

1.1 On board any ship having the sources of pollution by garbage special means and measures for prevention pollution by garbage shall be provided.

1.2 In inland waterways, the garbage generated on board the ship shall be collected and stored for discharge to the reception facilities or incineration in a ship's incinerator (in case of no restrictions of the RF Administration). When operating a ship in the Arctic waters within the boundaries defined by the Polar Code in IMO resolution MEPC.264 (68), additional special measures and measures to prevent pollution by garbage shall be provided on this ship in order to fulfill the relevant operational requirements of the Code.

2 DEFINITIONS

2.1 In the present Part of the Rules the following definitions have been adopted.

Incinerator means the ship's plant for burning of solid waste generated during operation of the ship.

Garbage means all kinds of victual, domestic and operational waste (excluding fresh fish and parts thereof) generated during the normal operation of the ship as specified in Annex V to MARPOL 73/78.

Garbage processing device means a plant for comminution or reducing the volume of garbage.

Garbage receptacle means containers and other receptacles for the collection and storage of garbage.

3 SCOPE OF TECHNICAL SUPERVISION

3.1 The types and scope of surveys, as well as the guidelines on the documents issued by the Register are given in Part I "Regulations for Technical Supervision".

3.2 Every ship of 100 gross tonnage and above, and every ship which is certified to carry 15 or more persons, as well as fixed or floating platforms shall carry a garbage management plan developed with consideration of the requirements of IMO resolution MEPC.220(63) which the crew shall follow.

3.3 Every ship of 12 m or more in length overall, as well as every fixed and floating platform shall display a notice which notifies the crew and passengers of the garbage management requirements.

Every fixed and floating platform shall be provided by the Garbage Record Book.

3.4 The approved incinerators and garbage processing devices, including related electrical equipment, control and monitoring devices, are subject to technical supervision of the Register during manufacture.

3.5 The approved incinerators, garbage processing devices and garbage receptacles are subject to technical supervision of the Register during survey.

4 EQUIPMENT AND DEVICES FOR GARBAGE COLLECTION, STORAGE AND PROCESSING

4.1 GENERAL

4.1.1 In every ship provision shall be made for garbage collection and storage devices. Ships may be fitted with incinerators and garbage processing devices having regard to such factors as the type of the ship, area of navigation, number of crew, etc.

4.1.2 The garbage processing devices and incinerators shall comply with the requirements of Part VIII "Systems and Piping" and Part XI "Electrical Equipment", and the control, regulation and monitoring devices shall comply with the requirements of Part XV "Automation" of the RS Rules/C.

4.2 GARBAGE RECEPTACLES

4.2.1 Garbage receptacles may be removable or permanently fixed.

4.2.2 The customer-agreed calculation of the total capacity of the garbage receptacles having regard to the intended area of navigation, service conditions of the ship and number of persons on board shall be submitted to the Register.

4.2.3 The garbage receptacles shall be so designed as to allow their easy discharge and cleaning.

4.2.4 The garbage receptacles shall have smooth inner surfaces.

4.2.5 The removable garbage receptacles shall be provided with appliances for reliable securing on board the ship.

4.2.6 The garbage receptacles shall be provided with covers ensuring the tight closure of openings for garbage loading.

4.2.7 Depending on the categories generated on board the separate garbage receptacles shall be provided for the following garbage categories:

plastics and plastics mixed with non-plastic garbage;

food wastes;

domestic wastes;

glass, metal, aluminium cans, bottles, wood, paper, cardboard, rags, etc.;

cooking oil;

incinerator ashes;

operational wastes, including E-waste generated on board (e.g. electronic cards, gadgets, instruments, equipment, computers, printer cartridges, etc.) and the garbage, that might present a hazard to the ship or crew (e.g. oily rags, light bulbs, acids, chemicals, batteries, etc.);

cargo residues (if applicable);

animal carcasses (if applicable);

fishing gear (if applicable).

For each type of garbage, which is referred to domestic wastes category, the separate receptacles are recommended.

The garbage receptacles of each above mentioned category shall be clearly marked.

4.2.8 The garbage receptacles shall be located in places convenient for discharge of garbage to reception facilities and for its transport to processing or incineration locations. The garbage receptacles may be placed on the weather deck or in ventilated spaces isolated from accommodation and service spaces. In all cases garbage shall be so stored to avoid human health and safety hazards.

4.2.9 For high-speed craft below 100 gross tonnage as well as for ships of less than 25 meters in length when arrangement of a required number of containers is complicated, it is allowed to collect garbage into marked strong plastic package to be stored in the internal ventilated ship spaces or designated places and further discharge to reception facilities.

4.2.10 The minimum number of generated garbage is determined by using recommended specific accumulation values given in Table 4.2.10. It is allowed to use other accumulation values based on the experience of operation of similar ships according to type, number of persons on board, area of navigation and operation conditions.

Table 4.2.10

No.	Designation	Units	Specific value of accumulated garbage
1	Plastic	m^3/ (person a day)	0,004
2	Dry domestic waste		0,002
3	Solid food waste		0,002
4	Cooking oil	l/ (person a day)	0,04

4.3 GARBAGE COMMINUTERS AND COMPACTORS

4.3.1 The garbage comminuters shall provide for comminution of particles not exceeding 25 mm in size.

4.3.2 Garbage compactors shall be installed in a compartment with an adequate space for operating and maintaining the unit and storing trash to be processed. The compartment shall have a fresh water flushing system, coamings, deck drains, adequate ventilation and fire-fighting equipment.

Fire-fighting equipment shall comply with the requirements of item 4 of Table 3.1.2.1, Part VI "Fire Protection" of the RS Rules/C.

4.3.3 The garbage comminuters and compactors shall be provided with plates indicating conditions of their use.

4.4 INCINERATORS

4.4.1 The incinerators installed on board the ship shall have Type Approval Certificate in compliance with IMO resolution MEPC.76(40) or MEPC.244(66), as amended by IMO resolution MEPC.368(79) (whichever is applicable) in the following cases:

incinerators installed in ships, the keels of which were laid on or after 1 January 2000;

incinerators installed in existing ships, the date of contract for delivery of which is on or after 1 January 2000.

4.4.2 The Incinerators installed in existing ships, the date of contract for delivery of which is before 1 January 2000 may have the Type Approval Certificate in compliance with the requirements of IMO resolution MEPC.59(33) or other normative documents.

4.4.3 Where that incinerator is of the continuous-feed type, waste shall not be fed into the unit when the combustion chamber gas outlet temperature is below 850 °C. Oil residues generated during normal operation of a ship shall not refer to the purposes of application of 2.5, Part VI "Ship's equipment and arrangement for the prevention of pollution" and can be fed for combustion when the required warm-up temperature in the combustion chamber reaches 650 °C. Where that incinerator is of the batch-loaded type, the unit shall be designed so that the temperature in the area of solid waste combustion shall reach 600 °C within five minutes after start-up.

4.4.4 Provision shall be made for pans and their efficient drainage in the areas of potential fuel oil and oil residue (sludge) leaks. These latter accumulated on pans shall be carried away to a piping system for collecting oil leaks.

4.4.5 The exhaust system, fuel oil piping, oil residue (sludge) piping, fittings, mechanical and flexible joints of incinerators shall comply with the requirements of Part VIII "Systems and Piping" of the RS Rules/C.

4.4.6 The incinerators intended for incineration of oil residue (sludge) shall be provided with an oil residue (sludge) processing system (refer to 9.2 — 9.4 of Part II "Ship's Construction, Equipment and Arrangements for the Prevention of Pollution by Oil").

4.4.7 Incinerators may be installed in machinery spaces or shall be located in separate spaces.

4.4.8 A system for feeding fuel oil to burners shall make possible their shutting off from two locations one of which shall be outside the space wherein the incinerator is installed.

4.4.9 When the incinerator is installed in a separate space, the following shall be provided:

.1 plenum-exhaust ventilation providing an adequate air intake needed for the incinerator functioning;

.2 an automatic fire alarm in compliance with 4.2.1, Part VI "Fire Protection" of the RS Rules/C;

.3 fire-extinguishing system in compliance with item 10 in Table 3.1.2.1, Part VI "Fire Protection" of the RS Rules/C.

PART VI. SHIP'S EQUIPMENT AND ARRANGEMENTS FOR THE PREVENTION OF AIR POLLUTION

1 GENERAL

1.1 APPLICATION

1.1.1 The provisions of this Part of the Rules shall apply to the ships specified in 1.1, Part I "Regulations for Technical Supervision".

1.2 DEFINITIONS

1.2.1 In this Part of the Rules the following definitions have been adopted.

Emission means any release of harmful substances subject to control by this Part from ships into the atmosphere or sea.

Fuel oil means any fuel delivered to and intended for combustion purposes for propulsion or operation on board a ship, including gas, distillate and residual fuel.

Conventional propulsion in relation to 2.6 of this Part means a method of propulsion where a main reciprocating internal combustion engine(s) is the prime mover and coupled to a propulsion shaft either directly or through a gear box.

Cruise passenger ship in relation to 2.6 of this Part means a passenger ship not having a cargo deck, designed exclusively for commercial transportation of passengers in overnight accommodations on a sea voyage.

Major (substantial) conversion means, in relation to Chapter 2.6 of this Part, a conversion of a ship:

which substantially alters the dimensions, carrying capacity or engine power of the ship; or

which changes the type of the ship; or

the intent of which in the opinion of the Administration is substantially to prolong the life of the ship; or

which substantially alters the energy efficiency of the ship and includes any modifications that could cause the ship to exceed the applicable required EEDI calculated in accordance with 2.6.5.

Major conversion in relation to nitrogen oxides (NO_x) emission control means modification of a marine diesel engine, where:

.1 the engine is replaced by a marine diesel engine, or an additional marine diesel engine is installed; or

.2 any major modification is made to the engine; or

.3 the maximum continuous rating of the engine is increased by more than 10 % as compared to the maximum continuous rating of the original certification of the engine.

Identical engine means, an engine as compared to the engine being replaced[1], an engine (refer to the latest revision of IMO circular MEPC.1/Circ.795) which is of the same:

design and model;

rated power;

rated speed;

use;

number of cylinders;

fuel system type (including, if applicable, injection control software); and one of the two:

for engines without EIAPP certification, have the same NO_x critical components and settings in compliance with the requirements of 2.2.10; or

for engines with EIAPP certification, belonging to the same Engine Group/Engine Family in compliance with the requirements of 2.2.10.

Non-conventional propulsion in relation to 2.6 of this Part means a method of propulsion, other than conventional propulsion, including diesel-electric propulsion, turbine propulsion, and hybrid propulsion systems.

New ship means a ship:

for which the building contract is placed on or after 1 January 2013; or in the absence of a building contract,

---

[1] For engines without EIAPP Certification in compliance with the requirements of Annex VI to MARPOL 73/78 there will not be the defining NO_x critical component markings or setting values as usually given in the approved Technical File. Consequently in these instances the assessment of same NO_x critical components and settings shall be established on the basis that the following components and settings are the same.

the keel of which is laid on or after 1 July 2013; or

the delivery of which is on or after 1 July 2015.

When it is not possible to determine the actual delivery date, the completion date of ship's survey being a basis for issuing the Certificate (Form 2.4.18RF) is assumed as the delivery date.

Ozone depleting substances mean controlled substances defined in paragraph 4 of Article I of the Montreal Protocol on Substances that Deplete the Ozone Layer, 1987, listed in Annexes A, B, C or E to the said Protocol in force at the time of application or interpretation of Annex VI to MARPOL 73/78.

Ozone depleting substances that may be found on board the ship include, but are not limited to:

halons:

1211 Bromochlorodifluoromethane;

1301 Bromotrifluoromethane;

2402 1,2-Dibromo-1,1,2,2-tetrafluoroethane (also known as Halon 114B2);

chlorofluorocarbons (CFCs):

CFC-11 Trichlorofluoromethane;

CFC-12 Dichlorodifluoromethane;

CFC-113 1,1,2-Trichloro-1,1,2-trifluoroethane;

CFC-114 1,2-Dichloro-1,1,2,2-tetrafluoroethane;

CFC-115 Chloropentafluoroethane.

Polar Code means the International Code for Ships Operating in Polar Waters adopted by IMO resolutions MSC.385(94) and MEPC.264(68).

Emission control area means an area where the adoption of special mandatory measures for emissions from ships is required to prevent, reduce and control air pollution from NO_x or SO_x and particulate matter and their attendant adverse impacts on human health and the environment. Emission control areas shall include those listed in regulations 13 and 14 of Annex VI to MARPOL 73/78.

Cargo vapour collection system means an arrangement consisting of pipelines and hoses applied for collecting vapours from cargo tanks of oil tankers and their transfer to the device intended for their processing (i.e. utilization, for example, by means of incineration).

Shipboard incineration means the incineration of wastes and other matter on board the ship, if such wastes or other matter were generated during the normal operation of that ship.

Sulphur content of fuel oil means the concentration of sulphur in a fuel oil, measured in % m/m as tested in accordance with a standard acceptable to IMO (ISO 8754:2003 "Petroleum products — Determination of sulphur content — Energy-dispersive X-ray fluorescence spectrometry") for purposes of Chapter 2.3 of this Part of the Rules.

Ships constructed mean ships the keels of which are laid or which are at a similar stage of construction.

A ship delivered on or after 1 September 2019 for the purpose of 2.6 of this Part means a ship:

for which the building contract is placed on or after 1 September 2015; or

in the absence of a building contract, the keel of which is laid, or which is at a similar stage of construction, on or after 1 March 2016; or

the delivery of which is on or after 1 September 2019.

Marine diesel engine means any reciprocating internal combustion engine operating on liquid or dual fuel (liquid and gas), to which Chapter 2.2 of this Part applies, including compound and booster systems providing use of engine exhaust gas energy to drive

power gas turbines if applied. In addition, a gas fuelled engine installed on a ship constructed on or after 1 March 2016 or a gas - fuelled additional or non-identical replacement engine installed on or after that date is also considered as a marine diesel engine.

Existing ship means a ship which is not new.

Major modification of a marine diesel engine means:

for engines installed on ships constructed on or after 19 May 2005, substantial modification means any modification to an engine that could potentially cause the engine to exceed the emission standards set out in Chapter 2.2;

for engines installed on ships constructed before 19 May 2005, major modification means any modification made to an engine that may result in exceeding of existing characteristics of NO_x emissions for more than 10 % as specified in 6.3.11 of the RS Guidelines on the Application of Provision of the Technical Code on Control of Emission of Nitrogen Oxides from Marine Diesel Engines.

Required Energy Efficiency Design Index (EEDI) means the maximum value of attained EEDI that is allowed by 2.6.5.

Installation (in relation to Regulation 12 of Annex VI to MARPOL 73/78) means the installation of systems, equipment, including portable fire extinguishers, insulation, or other material on the ship, excluding repair or recharge of previously installed systems, equipment, insulation or other material, or recharge of portable fire extinguishers.

Fuel incinerator in relation to exhaust gas cleaning systems to reduce sulphur oxides (SO_x) emission means any engines, auxiliary boilers, gas turbines or other installations, in which fuel is burned.

Electronic Record Book means a device or system, approved by the Register, used to electronically record the required entries for discharges, transfers and other operations as required under the present Part in lieu of a hard copy record book.

1.3 SURVEYS AND SCOPE OF TECHNICAL SUPERVISION

1.3.1 The types and scope of surveys, as well as the guidelines on the documents issued by the Register are given in Part I "Regulations for Technical Supervision".

1.3.2 Subject to the technical supervision are the following (if applicable):

.1 installations and systems with regard to applying therein ozone depleting substances (fire-fighting systems, refrigerating equipment);

.2 diesel engines with power output of more than 130 kW power output with regard to nitrogen oxides (NO_x) emission control in compliance with the NO_x Technical Code;

.3 exhaust gas cleaning system for reduction of NO_x emissions in compliance with the NO_x Technical Code;

.4 exhaust gas cleaning system for reduction of sulphur oxides (SO_x) emission in compliance with IMO resolution MEPC.340(77);

.5 fuel oil system of the ship with regard to possibility of engine change-over to low sulphur fuel oil at the ship entering a SO_x Emission Control Area and of fuel oil sampling at receiving pipeline by means of sampling arrangement, which design is approved in compliance with IMO resolution MEPC.182(59);

.6 cargo vapour discharge system in relation to the availability of the system approved by the Register on board the oil tankers subject to VOC vapour emission control;

.7 shipboard incinerators.

2 CONTROL OF EMISSIONS FROM SHIPS

2.1 OZONE DEPLETING SUBSTANCES

2.1.1 Any deliberate emissions of ozone depleting substances occurring in the course of recharging, maintaining and repairing of installations on board the ship shall be prohibited (except for the purpose of securing the safety of a ship or saving life at sea, or in case of a ship damage). Deliberate emissions do not include minimal releases associated with recapture or recycling of ozone depleting substances.

2.1.2 The operation of the following installations is prohibited:

.1 installations, which contain ozone depleting substances other than hydro-chlorofluorocarbons (HCFCs):

on ships constructed on or after 19 May 2005; or

in the case of ships constructed before 19 May 2005, which have a contractual delivery date of the equipment to the ship on or after 19 May 2005 or, in the absence of a contractual delivery date, the actual delivery of the equipment to the ship on or after 19 May 2005;

.2 installations, which contain HCFCs:

on ships constructed on or after 1 January 2020; or

in the case of ships constructed before 1 January 2020, which have a contractual delivery date of the equipment to the ship on or after 1 January 2020 or, in the absence of a contractual delivery date, the actual delivery of the equipment to the ship on or after 1 January 2020.

2.1.3 The ozone depleting substances and equipment containing such substances shall be delivered to appropriate reception facilities when removed from ships.

2.1.4 Permanently tight equipment containing CFCs and HCFCs with no compounds for charging of cooling agent or removable components shall not be subject to control of ozone depleting substances emissions from ships. Domestic refrigerators, refrigerating chambers, air conditioners, etc. may be considered as such equipment.

2.1.5 Each ship of 400 gross tonnage and above:

shall maintain a list of equipment containing ozone depleting substances. This list shall be entered in the Certificate (Form 2.4.18RF);

which has rechargeable systems that contain ozone depleting substances shall maintain an Ozone Depleting Substances Record Book.

2.1.6 The Ozone Depleting Substances Record Book may form part of an existing logbook or electronic record book as approved by the Register. An existing electronic recording system (if applicable) shall be considered an electronic record book, provided the electronic recording system is approved on or before the first International Air Pollution Prevention (IAPP) Certificate renewal survey carried out on or after 1 October 2020, but not later than 1 October 2025, taking into account provision of MEPC.312(74).

Entries in the Ozone Depleting Substances Record Book shall be recorded in terms of mass, in kg, of the ozone depleting substances in respect of the following:

.1 recharge, full or partial, of equipment containing ozone depleting substances;

.2 repair or maintenance of equipment containing ozone depleting substances;

.3 deliberate and non-deliberate discharge of ozone depleting substances to the atmosphere;

.4 discharge of ozone depleting substances to the land-based reception facilities; and

.5 supply of ozone depleting substances to the ship.

2.2 PREVENTIION OF AIR POLLUTION FROM HARMFUL SUBSTANCES IN MARINE ENGINE EXHAUST GASES

2.2.1 The requirements for control of NO_x emissions shall apply to:

each diesel engine with a power output of more than 130 kW which is permanently installed on a ship constructed on or after 19 May 2005 regardless of the gross tonnage of the ship onto which the engine is installed;

each diesel engine with a power output of more than 130 kW which has undergone a major conversion regarding control of NO_x emissions on or after 19 May 2005, except the cases when it is demonstrated that such engine is identical to the one it replaces.

2.2.2 The requirements for control of NO_x emissions do not apply to:

emergency diesel engines;

engines installed in lifeboats and any equipment intended to be used solely in case of emergency on the ship on which it is installed;

engines that are solely dedicated to the exploration, exploitation and associated offshore processing of sea-bed mineral resources.

2.2.3 The date of major conversion may be determined:

by the contract for this conversion; or

by the date of engine removal from service in compliance with the ship's log book (if the contractual date for conversion is lacking).

2.2.4 For a major conversion involving the replacement of a marine diesel engine with a non-identical marine diesel engine or the installation of an additional marine diesel engine, the requirements in 2.2.8 in force at the time of the replacement or addition of the engine shall apply. The following dates shall be defined as the dates of replacement or the installation of an additional marine diesel engine:

.1 the contractual delivery date of the engine; or

.2 in the absence of a contractual delivery date, the actual delivery date of the engine to the ship, provided that the date is confirmed by a delivery receipt.

The above-mentioned dates are the dates of major conversion and, where necessary, shall be entered in Pollution from Ships Prevention Certificate.

2.2.5 In the case of replacement of a marine diesel engine on or after 1 January 2021, it is determined that the replacement engine cannot meet the standards applicable to Tier III engines, then that replacement engine shall meet the standards applicable to Tier II engines (Tiers are set forth further in 2.2.8).

The criteria of when it is not possible for replacement engine to meet the standards set forth in regulation 13.5.1.1 of Annex VI to MARPOL 73/78 are given in the 2013 Guidelines as Required by Regulation 13.2.2 of MARPOL Annex VI in Respect of Non-Identical Replacement Engines Not Required to Meet the Tier III limit (refer to IMO resolution MEPC.230(65)). The following criteria may be applied:

.1 a replacement engine of similar rating complying with Tier III is not commercially available; or

.2 the replacement engine, in order to be brought into Tier III compliance, needs to be equipped with a NO_x reducing device which due to:

.2.1 size cannot be installed in the limited space available on board; or

.2.2 extensive heat release could have adverse impact on the ships structure, sheeting, and/or equipment whilst additional ventilation and/or insulation of the engine-room/compartment will not be possible;

.2.3 the replacement engine cannot be installed due to its dimensions and weight, as well as due to the fact that it cannot be integrated with the ship components (drive shafts, reduction gears, propeller shafts, etc.), systems and equipment;

.2.4 adjustments of the replacement engine, which shall be equipped with the NO_x reducing device, do not allow the joint operation of the engine and this device;

as well as other criteria indicated in IMO Guidelines mentioned above.

2.2.6 To identify whether the engine is an identical engine, the Unified Interpretations according to the latest version of IMO circular MEPC.1/Circ.795 shall be considered.

2.2.7 Where major modification (refer to the definition in 1.2.1) was made to any diesel engine (except those specified in 2.2.2) on or after 19 May 2005, or its maximum continuous rating was increased by more than 10 %, as compared with that of the same engine at its original certification, the NO_x emission (calculated as the total weighted NO_2 emission) from the engine shall meet the following standards:

for ships constructed prior to 19 May 2005, the standard applied to the Tier I engines shall apply;

for ships constructed on or after 19 May 2005, the standards in force at the time the ship was constructed (standards for Tier I, II and III engines) shall apply.

2.2.8 The operation of each diesel engine to which regulation 2.2.1 applies, is prohibited, except when the NO_x emission (calculated as the averaged weighted NO_2 emission) from the diesel engine is within the following limits for the mentioned below tiers of diesel engines compliance with these requirements:

Tier I: diesel engine is installed in the ship constructed on or after 19 May 2005, but before 1 January 2011:

17,0 g/kWh when n is less than 130 rpm;

$45{,}0 \times n^{(-0{,}20)}$ g/kWh when n is 130 or more, but less than 2000 rpm;

9,8 g/kWh when n is 2000 rpm or more;

Tier II: diesel engine is installed on a ship constructed on or after 1 January 2011:

14,4 g/kWh when n is less than 130 rpm;

$44{,}0 \times n^{(-0{,}23)}$ g/kWh when n is 130 or more, but less than 2000 rpm;

7,7 g/kWh when n is 2000 rpm or more;

Tier III: diesel engine is installed on a ship constructed on or after 1 January 2021 and intended for operation within a NO_x Tier III emission control area of the Baltic Sea:

3,4 g/kWh when n is less than 130 rpm;

$9{,}0 \times n^{(-0{,}20)}$ g/kWh when n is 130 or more, but less than 2000 rpm;

2,0 g/kWh when n is 2000 rpm or more;

N o t e . In all cases n is rated engine speed.

The Tier III standards shall not apply to:

a marine diesel engine installed on a ship with a length (L), as defined in regulation 1.19 of Annex I to MARPOL 73/78, of less than 24 m when it has been specifically designed, and is used solely, for recreational purposes; or

a marine diesel engine installed on a ship with a combined nameplate diesel engine propulsion power of less than 750 kW if it is demonstrated, to the satisfaction of the Administration, that the ship cannot comply with the Tier III standards because of design or construction limitations of the ship; or

a marine diesel engine installed on a ship constructed prior to 1 January 2021 of less than 500 gross tonnage, with a length (L), as defined in regulation 1.19 of Annex I to MARPOL 73/78, of 24 m or over when it has been specifically designed, and is used solely, for recreational purposes.

For marine diesel engine installed on a ship which activities take place in a shipyard or other repair facility located in a NO_x Tier III emission control area, the NO_x Tier III emission standards are temporarily exempted provided the conditions specified in regulation 13 of MARPOL Annex VI (IMO resolution MEPC.328(76) are met.

2.2.9 Diesel engines which are covered by these requirements, shall be subject to initial survey on the manufacturer's test bench in compliance with 2.1 of the RS Guidelines of the Application of Provisions of the NO_x Technical Code. For those engines the NO_x Technical Files or Technical Engine Exhaust Emissions Data Sheets prepared by the manufacturer or applicant for engine certification shall be agreed by the Register.

Test and certification may be performed in accordance with the interstate standards GOST ISO 8178-4-2013 (ISO 8178-4:2007) and GOST 31967-2012 (ISO 8178-1:2006) (updated version), what applicable.

2.2.10 Upon satisfactory results of the survey, the Register shall issue Engine Air Pollution Prevention Certificates (EIAPP Certificate, Forms 2.4.40 and 2.4.41. The word "International" shall be stricken through in the headings of the Certificate and the Supplement therein.

2.2.11 In the event that Supplement to the Certificate (Form 2.4.41) includes the NO_x reducing device (Selective Catalyst Reduction system (hereinafter referred to as the SCR system)), the latter shall be considered an engine component and it shall also be informed about in the SCR system in the Technical file/Data Sheet for this engine. The marine diesel engine including the SCR system shall be tested at the manufacturer's test bed at the initial survey in accordance with 2.1.3 of the RS Guidelines of the Application of Provisions of the NO_x Technical Code taking into consideration the relevant provisions of the IMO Guidelines adopted by IMO resolution MEPC.291(71), as amended.

In case the marine diesel engine cannot be tested along with the SCR system due to technical and practical difficulties and if the Register approves it, the initial survey procedure shall be applied to the marine diesel engine including the SCR system in compliance with Scheme B in IMO resolution MEPC.291(71), as amended. Such a procedure provides for the marine diesel engine to be tested without the SCR system at the manufacturer's test bed, testing of SCR chamber separately, followed by testing of the marine diesel engine along with this system onboard within the scope stipulated by the above Guidelines.

2.2.12 In case the approval of Technical Files/Data Sheets and issue of Certificates for the above engines are made by other Administrations or recognized organizations upon their authorization, the said documents may be recognized by the Register upon their proper consideration.

2.2.13 The Tier and on/off status of marine diesel engines installed on board a ship to which the Certificates have been issued confirming that they are certified to both Tier II and Tier III or that they are certified to Tier II only shall be recorded in such logbook at entry into and exit from a NO_x Tier III emission control area, or when the on/off status changes within such an area, together with the date, time and position of the ship. This requirement also applies to the case when there is a necessity to switch the engine operation from one standard to another when the ship is located in the control area of NO_x emissions control.

2.2.14 When applying provisions of 2.3.5 regarding ship's fuel oil quality including provisions on fuel that shall not cause an engine to exceed the applicable NO_x emission limit, if biofuel, synthetic fuel and other fuels derived from methods other than petroleum refining or blends containing these fuels, apply, one shall be guided by Section 13 of the Unified Interpretation in the latest version of IMO circular MEPC.1/Circ.795/.

2.3 SULPHUR OXIDES (SO_x)

2.3.1 The sulphur content of any fuel oil used on board the ships shall not exceed the following limits:

0,50 % m/m, on and after 1 January 2020.

From 1 March 2020 the sulphur content of fuel oil used or carried for use on board a ship shall not exceed 0,50 % m/m. The prohibition on the carriage of non-compliant fuels also applies to the fuels for shipboard equipment intended to be used solely in case of emergency.

2.3.2 While a ship is operating in an emission control area, the sulphur content of fuel oil used on board that ship shall not exceed 0,10 % m/m.

2.3.3 A cleaning system of exhaust gases from the shipboard fuel oil combustion machinery approved by the Register, taking into account the provisions of IMO resolution MEPC.340(77) and the requirements in 2.3.1 and 2.3.2 as appropriate, may be used as an alternative compliance method to reduce the emission of sulphur oxides.

2.3.4 To approve the above plants, according to IMO resolution MEPC.340(77), it shall be demonstrated their conformity to the above limits on the basis of SO_2 (ppm)/CO_2 (% v/v) ratio values given in Table 2.3.4.

Table 2.3.4

Fuel oil sulphur limits specified in Regulations 14.1 and 14.4 of Annex VI to MARPOL 73/78 and corresponding Emission Ratio limit values

Fuel oil sulphur content (% m/m)	Emission ratio SO_2 (ppm^{-1})/CO_2 (% v/v)
0,50	21,7
0,10	4,3
Note. The limits of emissions ratios may be only applicable when using petroleum based distillate or residual fuel oils.	

2.3.5 For ships of 400 gross tonnage and above, details of fuel oil delivered to and used on board shall be recorded by means of bunker delivery notes, except for gas fuel, which shall be under the ship control within three years since the time of fuel oil delivery and shall be accompanied by a representative fuel oil sample except for gas fuel samples obtained at the receiving inlet bunker manifold by one of the following methods:

.1 manual valve-setting continuous-drip sampling arrangement; or

.2 time-proportional automatic sampling arrangement; or

.3 flow-proportional automatic sampling arrangement.

2.3.6 The representative sample(s) of the fuel oil shall be retained under the ship control until the fuel oil delivered is substantially consumed, but in any case for a period not less than 12 months from the time of delivery. The fuel oil verification procedure is detailed in Appendix VI of Annex VI to MARPOL 73/78.

2.3.7 Considering the above, the ship fuel oil systems shall ensure the following:

.1 possibility of fuel oil sampling at the receiving inlet bunker manifold by means of the sampling arrangement approved by the Register;

.2 possibility of ensuring safe change-over to the fuel oil with sulphur content, as specified in 2.3.2, prior to entry into inland waterways, as well as into SO_x Emission Control Areas. In this case, a possibility of full flushing of the fuel oil service system of all kinds of fuels with sulphur content exceeding the levels specified in 2.3.2 shall be ensured.

The system for feeding fuel oil shall be fully flushed of all kinds of fuel with a sulfur content exceeding the applicable sulphur content. The written fuel changeover procedure shall be available on board the ship and the data in accordance with Regulation 14.6 of Annex VI to MARPOL 73/78 shall be recorded in ship's log.".

2.4 VOLATILE ORGANIC COMPOUNDS (VOC)

2.4.1 All oil tankers loading cargo in ports or terminals where VOC vapour emission control systems are installed, shall be provided with a cargo vapour collection and discharge system approved by the Register in accordance with Standards for vapour emission control systems (refer to IMO circular MCS/Circ.585), as well as the requirements of 9.9, Part VIII "Systems and Piping" of the Rules for the Classification and Construction of Sea-Going Ships.

2.4.2 The Register-approved VOC management plans developed in compliance with IMO resolution MEPC.185(59) and IMO circular MEPC.1/Circ.680 shall be available on board the oil tankers carrying crude oil and shall be followed and IMO circular MEPC.I/Circ.719. Such available plans are not required on oil tankers not carrying crude oil.

2.5 SHIPBOARD INCINERATION

2.5.1 Shipboard solid waste incineration shall be allowed only in a shipboard incinerator having the Type Approval Certificate.

Shipboard incineration of oil residue (sludge) is allowed only in the following approved plants:

incinerators with appropriate system of oil residue (sludge) preparation for burning;

auxiliary steam boilers with appropriate system of oil residue (sludge) preparation for burning;

heaters of thermal liquid heaters with appropriate system of oil residue (sludge) preparation for burning;

inert gas systems with appropriate system of oil residue (sludge) preparation for burning.

2.5.2 Every shipboard incinerator installed on board on or after 1 January 2000 shall have the Type Approval Certificate in compliance with IMO resolution MEPC.76(40) or MEPC.244(66) as amended by resolution MEPC.368(79), whichever is applicable.

2.5.3 The provisions for surveys of incinerators on board the ship are given in 4.4, Part V "Ship's Equipment and Arrangements for the Prevention of Pollution by Garbage".

2.6 REGULATIONS ON ENERGY EFFICIENCY FOR SHIPS

2.6.1 Regulations on energy efficiency are applicable to all ships of 400 gross tonnage and above except for the ships navigation of which is not propelled by mechanical means as well as platforms which include Floating Offshore Oil-and-Gas Production Units (FPU) (having the FPSO and FSU descriptive notations) and MODU (whatever their navigation is).

2.6.2 For the following ships the attained (calculated) EEDI and required (maximum) EEDI shall be determined:

new ships;

new ships which have undergone a major conversion;

new or existing ships which have undergone a major conversion that is so extensive that the ships are regarded by the RF Administration as a newly constructed ship.

2.6.3 Requirements related to the attained EEDI apply only to the above mentioned ships of the following types:

bulk carrier;

gas carrier (a cargo ship constructed or adapted and used for the carriage in bulk of liquefied natural gas (LNG);

LNG carrier (a cargo ship used for the carriage in bulk of liquefied natural gas (LNG)) having conventional or non-conventional propulsion, delivered on or after 1 September 2019;

tanker (oil tanker, chemical tanker or NLS tanker); container ship;

general cargo ship. Such ships exclude specialized dry cargo ships, namely livestock carrier, barge carrier, yacht carrier, nuclear fuel carrier, heavy load carrier (ships designed for the carriage of heavy/bulky cargoes that may have descriptive notation **Heavy cargo carrier**). When defining specialized heavy load carriers, the latest revision of the unified interpretations of the IMO circular MEPC.1/Circ.795 shall be followed;

ship for the carriage of refrigerated cargo in the holds, including the ships dedicated to the carriage of fruit juice in refrigerated cargo tanks;

combination carrier;

passenger ship (passenger ship which carries more than 12 passengers) with no required EEDI;

cruise passenger ship having non-conventional propulsion, delivered on or after 1 September 2019. Thus, only attained EEDI shall apply to cruise passenger ship having conventional propulsion delivered before above date;

ro-ro cargo ship;

ro-ro passenger ship.

The above requirements for attained and required EEDI shall not apply to cargo ships having non-conventional propulsion except for cruise passenger ships or LNG carriers specified above.

From 1 October 2020 the above regulation on energy efficiency shall not apply to category A ships defined in the Polar Code.

2.6.4 The attained EEDI shall be calculated according to the formula specified in the 2022 Guidelines on the Method of Calculation of the Attained Energy Efficiency Design Index (EEDI) for New Ships given in IMO resolution MEPC.364(79).

2.6.5 The attained EEDI for ship types given in Table 2.6.5 shall be equal or less than the required EEDI:

Attained EEDI ≤ Required EEDI = (1 – X/100) × Reference line value.

Required EEDI shall be multiplication of the reference line value for specific ship type and factor (1 – X/100), where the reduction factor X is considered corresponding to the ship type and size, and four time phases (refer to Table 2.6.5).

Table 2.6.5

Type of ship	Deadweight (DWT) / Gross Tonnage, GT	Phase 0 1 Jan 2013 – 31 Dec 2014	Phase 1 1 Jan 2015 – 31 Dec 2019	Phase 2 1 Jan. 2020 – 31 Mar 2022	Phase 2 1 Jan. 2020 – 31 Dec. 2024	Phase 3 1 Apr. 2022 and onwards	Phase 3 1 Jan. 2025 and onwards
Bulk carrier	20000 DWT and above	0	10	—	20	—	30
	10000 DWT and above, but less than 20000 DWT	N/A	0 — 10[1]	—	0 — 20[1]	—	0 — 30[1]
Gas carrier[3]	15000 DWT and above	0	10	20	—	30	—
	10000 DWT and above, but less than 15000 DWT	0	10	—	20	—	30
	2000 DWT and above, but less than 10000 DWT	N/A	0 — 10[1]	—	0 — 20[1]	—	0 — 30[1]
Tanker	20000 DWT and above	0	10	—	20	—	30
	4000 DWT and above, but less than 20000 DWT	N/A	0 — 10[1]	—	0—20[1]	—	0 — 30[1]
Container ship	200000 DWT and above	0	10	20	—	50	—
	120000 DWT and above, but less than 200000 DWT	0	10	20	—	45	—
	80000 DWT and above, but less than 120000 DWT	0	10	20	—	40	—
	40000 DWT and above, but less than 80000 DWT	0	10	20	—	35	—
	15000 DWT and above, but less than 40000 DWT	0	10	20	—	30	—
	10000 DWT and above, but less than 15000 DWT	N/A	0 — 10[1]	0 — 20[1]	—	15 — 30[1]	—
General Cargo ships	15000 DWT and above	0	10	15	—	30	—
	3000 DWT and above, but less than 15000 DWT	N/A	0 — 10[1]	0 — 15[1]	—	0 — 30[1]	—
Refrigerated cargo carrier	5000 DWT and above	0	10	—	15	—	30
	3000 DWT and above, but less than 5000 DWT	N/A	0 — 10[1]	—	0 — 15[1]	—	0 — 30[1]
Combination carrier	20000 DWT and above	0	10	—	20	—	30
	4000 DWT and above, but less than 20000 DWT	N/A	0 — 10[1]	—	0 — 20[1]	—	0 — 30[1]
LNG carrier[2]	10000 DWT and above	N/A	10[3]	20	—	30	—
Ro-ro cargo ship (vehicle carrier)[2]	10000 DWT and above	N/A	5[3]	—	15	—	30
	2000 DWT and above	N/A	5[3]	—	20	—	30

Type of ship	Deadweight (DWT) / Gross Tonnage, GT	Phase 0 1 Jan 2013 – 31 Dec 2014	Phase 1 1 Jan 2015 – 31 Dec 2019	Phase 2 1 Jan. 2020 – 31 Mar 2022	Phase 2 1 Jan. 2020 – 31 Dec. 2024	Phase 3 1 Apr. 2022 and onwards	Phase 3 1 Jan. 2025 and onwards
Ro-ro cargo ship[2]	1000 DWT and above, but less than 2000 DWT	N/A	0 — 5[1, 3]	—	0 — 20[1]	—	30[1]
Ro-ro passenger ship[2]	1000 DWT and above	N/A	5[3]	—	20	—	30
	250 DWT and above, but less than 1000 DWT	N/A	0 — 5[1, 3]	—	0 — 20[1]	—	0 — 30[1]
Cruise passenger ship[2] having non-conventional propulsion	85000 GT and above	N/A	5[3]	20	—	30	—
	25000 GT and above, but less than 85000 GT	N/A	0 — 5[1, 3]	0 — 20 [1]	—	0 — 30[1]	—

[1] Reduction factor to be linearly interpolated between the two values dependent upon ship size. The lower value of the reduction factor X shall be applied to the smaller ship size.
[2] Reduction factor applies to those ships delivered on or after 1 September 2019.
[3] Phase 1 commences for those ships on 1 September 2015.

N o t e . N/A means that no required EEDI applies.

2.6.6 In order to choose the reduction factor X specified in Table 2.6.5 for a specific new ship depending on the date of the building contract conclusion or, in its absence, the date of keel laying and delivery date, the following shall be applied:

2.6.6.1 The reduction factor "X" of phase "0" shall be applied to the following new ships: bulk carriers, combination carriers, container ships, gas carriers, general cargo carriers, refrigerated cargo carriers and tankers:

.1 for which the building contract is placed in phase "0", and the delivery is before 1 January 2019; or

.2 the building contract is placed before phase "0", and the delivery is on or after 1 July 2015 but before 1 January 2019; or

in the absence of a building contract,

.3 the keel of which is laid or which are at a similar stage of construction on or after 1 July 2013 but before to 1 July 2015 and delivery is before 1 January 2019; or

.4 the keel of which is laid or which are at a similar stage of construction before 1 July 2013 and the delivery is on or after 1 July 2015 but before 1 January 2019.

2.6.6.2 The reduction factor "X" of phase "1" is applied to the following new ships: bulk carriers, combination carriers, container ships, cruise passenger ships, gas carriers, general cargo carriers, LNG carriers, refrigerated cargo carriers, ro-ro cargo ships, ro-ro cargo ships (vehicle carriers), ro-ro passenger ships and tankers:

for ships where phase "1" commences on 1 January 2015:

.1 for which the building contract is placed in phase "1", and the delivery is before 1 January 2024; or

.2 the building contract of which is placed before phase "1", and the delivery is on or after 1 January 2019 but before 1 January 2024; or

in the absence of a building contract,

.3 the keel of which is laid or which are at a similar stage of construction on or after 1 July 2015 but before to 1 July 2020 and the delivery is before 1 January 2024; or

.4 the keel of which is laid or which are at a similar stage of construction before 1 July 2015 and the delivery is on or after 1 January 2019 but before 1 January 2024.

for ships where phase "1" commences on 1 September 2015:

.5 the building contract of which is placed in phase "1", and the delivery is before 1 January 2024; or

.6 the building contract of which is placed before phase "1", and the delivery is on or after 1 September 2019 and before 1 January 2024; or in the absence of a building contract:

.7 the keel of which is laid or which is at a similar stage of construction on or after 1 March 2016 and before 1 July 2020, and the delivery is before 1 January 2024; or

.8 the keel of which is laid or which is at a similar stage of construction before 1 March 2016, and the delivery is on or after 1 September 2019 and before 1 January 2024.

2.6.6.3 The reduction factor "X" of Phase "2" is applied to the following new ships: bulk carriers, combination carriers, container ships, cruise passenger ships, gas carriers, general cargo carriers, LNG carriers, refrigerated cargo carriers, ro-ro cargo ships, ro-ro cargo ships (vehicle carriers), ro-ro passenger ships and tankers:

for ship types where Phase "2" ends on 31 March 2022:

.1 the building contract of which is placed in Phase "2" and the delivery date is before 1 April 2026; or

.2 the building contract of which is placed before Phase "2", and the delivery is on or after 1 January 2024 and before 1 April 2026; or

in the absence of a building contract:

.3 the keel of which is laid or which are at a similar stage of construction on or after 1 July 2020 and before 1 October 2022, and the delivery is before 1 April 2026; or

.4 the keel of which is laid or which are at a similar stage of construction before 1 July 2020, and the delivery is on or after 1 January 2024 and before 01 April 2026;

for ship types where Phase 2 ends on 31 December 2024:

.5 the building contract of which is placed in Phase "2", and the delivery is before 1 January 2029; or

.6 the building contract of which is placed before Phase "2", and the delivery is on or after 1 January 2024 and before 1 January 2029; or

in the absence of a building contract:

.7 the keel of which is laid or which are at a similar stage of construction on or after 1 July 2020 and before 1 July 2025, and the delivery is before 1 January 2029; or

.8 the keel of which is laid or which are at a similar stage of construction before 1 July 2020, and the delivery is on or after 1 January 2024 and before 1 January 2029.

2.6.6.4 The reduction factor "*X*" of Phase "3" is applied to the following new ships:

bulk carriers, combination carriers, container ships, cruise passenger ships, gas carriers, general cargo carriers, LNG carriers, refrigerated cargo carriers, ro-ro cargo ships, ro-ro cargo ships (vehicle carriers), ro-ro passenger ships and tankers:

for ship types where phase 3 commences with 1 April 2022 and onwards:

.1 the building contract of which is placed in phase 3; or

.2 the building contract of which is placed before phase 3, and the delivery is on or after 1 April 2026; or

in the absence of a building contract:

.3 the keel of which is laid or which are at a similar stage of construction on or after 1 October 2022; or

.4 the keel of which is laid or which are at a similar stage of construction before 1 October 2022 and the delivery of which is on or after 1 April 2026;

for ship types where phase 3 commences on or after 1 January 2025:

.5 the building contract of which is placed in phase "3"; or

.6 the building contract of which is placed before phase "3", and the delivery is on or after 1 January 2029; or

in the absence of a building contract:

.7 the keel of which is laid or which is at a similar stage of construction on or after 1 July 2025; or

.8 the keel of which is laid or which is at a similar stage of construction before 1 July 2025 and the delivery of which is on or after 1 January 2029.

2.6.7 Reference line value is the ship's deadweight function.

Reference line formula:

$$\text{Reference line} = a \times b^{-c}$$

where *a* and *c* = constants determined according to Table 2.6.7.

Table 2.6.7

Type of ship	*a*	*b*	*c*
Ro-ro cargo ship (vehicle carrier)	$(DWT/GT)^{-0,7} \times 780,36$, where DWT/GT < 0,3 and 1812,63, where DWT/GT ≥ 0,3	Deadweight (DWT)	0,471
Ro-ro cargo ship	1405,15	Deadweight (DWT)	0,498
	1686,17[1]	Deadweight (DWT) of the ship, where DWT ≤ 17000[1] or 17000, where DWT>17000[1]	
Bulk carrier	961,79	Deadweight (DWT) of the ship, where DWT ≤ 279000 or 279000, where DWT > 279000	0,477
Ro-ro passenger ship	752,16	Deadweight (DWT)	0,381
	902,59[1]	Deadweight (DWT of the ship, where DWT ≤ 10000[1] or 10000, where DWT>10000[1]	
Gas carrier	1120,00	Deadweight (DWT)	0,456
LNG carrier	2253,7	Deadweight (DWT)	0,474
Tanker	1218,80	Deadweight (DWT)	0,488
Container ship	174,22	Deadweight (DWT)	0,201
Cruise passenger ship having non conventional propulsion	170,84	Gross tonnage (GT)	0,214
General cargo ship	107,48	Deadweight (DWT)	0,216
Ship for the carriage of refrigerated cargo	227,01	Deadweight (DWT)	0,244
Combination carrier	1219,00	Deadweight (DWT)	0,488
1To be used from phase 2 and thereafter.			

2.6.8 For every ship to which Regulation 2.6.5 is applied, the power of its propulsion system shall not be less than the power required to maintain the manoeuvrability in adverse conditions in compliance with IMO resolution MEPC.232(65) "Interim Guidelines for Determinating Minimum Propulsion Power to Maintain the Manoeuvrability of Ships in Adverse Conditions, 2013", as amended in IMO resolution MEPC.262(68).

2.6.9 Each ship (new and existing) of 400 gross tonnage and above shall keep on board a ship specific Ship Energy Efficiency Management Plan (SEEMP), except for platforms (including floating production units), MODU and FOP, and non-self propelled ships.

2.6.10 The SEEMP shall be developed by the shipowner, operator or any interested party as a ship specific plan in compliance with 2022 Guidelines for the Development of a Ship Energy Efficiency Management Plan (SEEMP) given in IMO resolution MEPC.346(78), Part I.

2.6.11 For existing ships, the verification of the requirement to have the SEEMP on board shall take place at the first intermediate or renewal survey of the ship for issue Certificate (Form 2.4.18RF) on or after 1 January 2013 (whichever is the first).

2.6.12 "In compliance with the Guidelines on Survey and Certification of the Energy Efficiency Design Index (EEDI) given in IMO resolution MEPC.365(79) as amended introduced by IMO resolution MEPC.374(80), the survey where it concerns the requirements for EEDI shall be carried out in two stages:

1 stage: preliminary validation of requirements in relation to EEDI at the design stage with review of EEDI Technical File; and

2 stage: final survey of the ship during sea trials, upon which results the amendments to EEDI Technical File are introduced, if necessary, and in Certificate (Form 2.4.18RF) an entry is made.

2.6.13 Preliminary verification at the design stage.

2.6.13.1 For the preliminary verification at the design stage, the shipowner shall submit to the Register an appropriate application and an EEDI Technical File containing the necessary information for the EEDI verification and other relevant background documents.

2.6.13.2 EEDI Technical File shall, at least, contain the following data:

deadweight (DWT) or gross tonnage (GT) for passenger ships;

the maximum continuous rating (MCR) of the main and auxiliary engines;

the ship speed on deep water and under the maximum design loading condition;

specific fuel consumption (SFC) of the main engine at 75 % of MCR power, the SFC of the auxiliary engines at 50 % of MCR power, electric power table, for certain ship types, as defined in the 2022 Guidelines (refer to IMO resolution MEPC.364(79));

speed-power curve(s) of the main engine determined and estimated at design stage under the full loading condition;

overview of propulsion plant and electricity supply system on board;

description of energy saving equipment; and

calculated value of the Attained EEDI.

Upon results of EEDI preliminary verification at design stage, the Report on the Preliminary Verification of EEDI (Form 6.4.3) shall be issued.

For the ships covered by 2.2.5.7 of IMO resolution MEPC.364(79), the electric power table shall be confirmed in compliance with Supplement 2 to the 2022 Guidelines on Survey and Certification of the Energy Efficiency Design Index (EEDI) given in IMO resolution MEPC.365(79) as amended introduced by IMO resolution MEPC.374(80).

2.6.14 Final verification at sea trials.

2.6.14.1 Prior to the sea trials the shipowner shall submit to the Register the following documents:

test program including the tests for determining speed of the ship in compliance with the Guidelines specified in 2.6.12;

final displacement table and the measured lightweight;

copies of NO_x Tehnical Files, where necessary.

2.6.14.2 Upon results of the sea trials the following shall be confirmed:

data on propulsion plant and power supply system, and other essential equipment described in the EEDI Technical File;

draught and trim;

sea conditions;

ship speed; and

shaft power measured according to manufacturer's recommendations and RPM of the main engine;

values of shipboard electric power table in compliance with 2.6.13.2 above.

2.6.14.3 The shipyard shall develop power curves based on the measured ship speed and the measured output of the main engine at sea trial. Then the shipyard shall compare the power curves obtained as a result of the sea trial and the estimated power curves at the design stage. In case differences are observed, the Attained EEDI shall be recalculated, as necessary, in accordance with the conditions in 4.3.8 of the above mentioned IMO Guidelines.

Upon results of sea trials, shipowner or shipyard, shall, if necessary, revise EEDI Technical File.

The EEDI Technical File, if revised, shall be submitted to the Register for confirmation that the revised attained EEDI is calculated in accordance with the above mentioned IMO Guidelines.

2.6.14.4 At the initial survey of the ship for compliance with the above mentioned requirements, the Register shall issue a Report on survey of a ship (Form 6.4.4) to verify that based on the test results the attained EEDI of the ship meets the requirements of the sea trials and the SEEMP is available onboard.

Upon satisfactory results, in Certificate (Form 2.4.18RF) a confirmation entry shall be made.

Upon satisfactory results of the survey the Certificate (Form 2.4.3RF) with Supplement (Form 2.4.3.1RF) shall be issued.

2.6.14.5 For preliminary and final verification of compliance with the EEDI requirements, it is necessary to consider and apply IACS PR38 (Rev.4 Jan 2023) "Procedure for Calculation and Verification of EEDI" which contains the Industry Guidelines for Calculation and Verification of EEDI (the document is available via IACS website www.iacs.org.uk).

Russian Maritime Register of Shipping

Rules for the Prevention of Pollution from Ships Intended for Operation in Sea Areas and Inland Waterways of the Russian Federation

FAI "Russian Maritime Register of Shipping"
7, Litera A, Millionnaya Ulitsa,
St. Petersburg, 191181
Russian Federation
www.rs-class.org/en/