RULES

FOR THE CLASSIFICATION AND CONSTRUCTION OF SEA-GOING SHIPS

PART XIV

WELDING

ND No. 2-020101-152-E

St. Petersburg
2022

RULES FOR THE CLASSIFICATION AND CONSTRUCTION OF SEA-GOING SHIPS

Rules for the Classification and Construction of Sea-Going Ships of Russian Maritime Register of Shipping have been approved in accordance with the established approval procedure and come into force on 1 January 2022 (except for Part XX "Additional Requirements for Commercial Yachts" which comes into force on 15 March 2022).

The present edition of the Rules is based on the 2021 edition taking into account the amendments and additions developed immediately before publication.

The procedural requirements, unified requirements, unified interpretations and recommendations of the International Association of Classification Societies (IACS) and the relevant resolutions of the International Maritime Organization (IMO) have been taken into consideration.

The Rules are published in the following parts:

Part I "Classification";

Part II "Hull";

Part III "Equipment, Arrangements and Outfit";

Part IV "Stability";

Part V "Subdivision";

Part VI "Fire Protection";

Part VII "Machinery Installations";

Part VIII "Systems and Piping";

Part IX "Machinery";

Part X "Boilers, Heat Exchangers and Pressure Vessels";

Part XI "Electrical Equipment";

Part XII "Refrigerating Plants";

Part XIII "Materials";

Part XIV "Welding";

Part XV "Automation";

Part XVI "Structure and Strength of Fiber-Reinforced Plastic Ships";

Part XVII "Distinguishing Marks and Descriptive Notations in the Class Notation Specifying Structural and Operational Particulars of Ships";

Part XVIII "Additional Requirements for Structures of Container Ships and Ships, Dedicated Primarily to Carry their Load in Containers". The text of the Part is identical to IACS UR S11A "Longitudinal Strength Standard for Container Ships" (June 2015) and S34 "Functional Requirements on Load Cases for Strength Assessment of Container Ships by Finite Element Analysis" (May 2015);

Part XIX "Additional Requirements for Cargo Ships of Less Than 500 Gross Tonnage";

Part XX "Additional Requirements for Commercial Yachts";

Supplement to Rules and Guidelines of Russian Maritime Register of Shipping "IACS Procedural Requirements, Unified Requirements, Unified Interpretations and Recommendations".

© Russian Maritime Register of Shipping, 2022

REVISION HISTORY[1]

(Purely editorial amendments are not included in the Revision History)

Amended paras/chapters/sections	Information on amendments	Number and date of the Circular Letter	Entry-into-force date
Annotation	Annotation has been amended in connection with issuing new Part XX "Additional Requirements for Commercial Yachts"	—	15.03.2022

[1] Amendments and additions introduced at re-publication or by new versions based on circular letters or editorial amendments.

1 GENERAL

1.1 APPLICATION

1.1.1 The requirements of this Part of the Rules apply to the following items, which are subject to survey by the Register:

.1 ship hulls;
.2 machinery and machinery installations;
.3 steam boilers, heat exchangers and pressure vessels;
.4 piping;
.5 ship equipment and arrangements.

1.1.2 The requirements of this Part shall establish requirements for welding consumables manufacture, welding procedures, and testing of welded structures stated in 1.1.1.

1.1.3 The requirements of this Part shall be applied when designing, building and manufacturing items stated in 1.1.1.

1.1.4 The requirements of this Part may be applied when carrying out repairs of structures stated in 1.1.1 as well, to an extent, which is deemed necessary and advisable.

1.2 DEFINITIONS AND EXPLANATIONS

1.2.1 Definitions and explanations pertaining to the general terminology of the Rules shall be found in Part I "Classification".

Besides, for the purpose of this Part the following definitions and explanations have been adopted.

High temperature brazing (hard brazing) is a brazing method, at which the melting temperature of the solder is above 450 °C.

Heat-affected zone is the layer of the base metal adjacent to a weld (or to the deposited metal) where structural changes were caused by the welding heat.

Weld metal is the metal obtained by the merging of the fused base metal and the deposited metal, or by fusion of the base metal only.

Deposited metal is the metal obtained by melting of electrodes or welding wire and containing no appreciable admixture of the base metal.

Base metal is the metal of items being welded.

Heat input E_1 is electric power consumed per unit of weld length and calculated by the formula $E_1 = IU/v$, kJ/cm, where I — welding current, A; U — welding voltage, V; v — welding speed, cm/s.

Penetration is the merging of the base metal into the deposited one or the merging of the fused metal of both the components being welded.

Friction stir welding (FSW) is a joining process producing a weld by the friction heating and mixing of material in the plastic state caused by a rotating tool that traverses along the tool path (refer to ISO 25239-1:2011).

Welding consumables include electrode, welding wire, flux and schielding gas used in welding.

1.3 GENERAL

1.3.1 Welding of items stated in 1.1.1 shall be effected by certified welders (operators) and Register-approved welding works (shops, bays) using welding consumables and welding processes approved by the Register.

The application of each of the welding processes (or its variant) at a particular works shall be backed up by the results of testing conducted in accordance with a program agreed with the Register according to Section 6, Part III "Technical Supervision during Manufacture of Materials" of Rules for Technical Supervision during Construction of Ships and Manufacture of Materials and Products for Ships.

Welding consumables shall be approved in compliance with the requirements of Section 4.

1.3.2 Welding operation on structures subject to survey by the Register shall be performed by those welders only who stood the tests prescribed by Section 5.

1.4 SCOPE OF SURVEYS

1.4.1 General provisions concerning survey during manufacture of materials and equipment shall be found in General Regulations for the Classification and Other Activity.

1.4.2 As far as structures stated in 1.1.1 are concerned, the following is subject to survey by the Register:

.1 welding consumables;

.2 welding procedures (choosing of welding consumables, preparation of parts for welding assembly, pre- and postheating, heat treatment);

.3 methods and scope of non-destructive testing and criteria for evaluation of welded joints.

1.5 TECHNICAL DOCUMENTATION

1.5.1 The scope of technical documentation on welding, which shall be agreed as part of the ship design, is set out in Part I "Classification". Technical documentation on items specified in 1.1.1 shall include information on welding required by those parts of the Rules, which cover the items concerned.

1.5.2 The composition of technical documentation for welding consumables being approved shall be determined proceeding from 4.1.3.1.

2 TECHNOLOGICAL REQUIREMENTS FOR WELDING

2.1 GENERAL

2.1.1 The present technological requirements shall be applied when welding structures specified in 1.1.1.

To effect welding operations and non-destructive testing of welded joints in structures subject to survey by the Register the works shall have adequate equipment.

2.1.2 Where welding is performed at low temperature, working conditions shall be provided to enable the welder to produce sound welds. The welding site shall be protected from draught and precipitation.

2.1.3 As far as practicable, structures shall be welded in enclosed spaces heated in winter. Where outdoor works are required, measures shall be taken to protect the welding site from wind, moisture and cold.

In case of shielded metal arc welding, the possibility of gas protection fault due to wind and draughts shall be excluded. Generally, the air speed at the welding site shall not exceed 0,5 m/s to provide the stable shielded gas.

Shielded metal arc welding procedures providing sound welding at high air speed shall be approved by the Register.

When performing outdoor works under unfavourable weather conditions, the edges to be welded shall always be dried by heating.

2.1.4 Welding at ambient temperatures below zero.

2.1.4.1 Where structures are welded at ambient temperatures below zero, the appropriate measures shall be taken to ensure satisfactory quality of welds, among others,

testing and cleaning of the edges to be welded from snow, frost and ice;

drying by heating of the edges to be welded to 20 °C, as a minimum;

local preheating of the edges to be welded prior to welding;

use of thermal insulation means;

use of the processes providing the required interrun temperature above zero during welding.

The specific measures to be taken when welding at ambient temperatures below zero shall be selected by the welded structures manufacturer and shall be agreed with the Register at approving the welding procedures.

2.1.4.2 On condition proper quality of welded joints is ensured, welding and all related operations on the structures subject to technical supervision by the Register made of hull structural steel of normal and higher strength 20 mm in thickness are generally permitted at ambient temperature up to – 25 °C. For specific conditions, the minimum permissible ambient temperature for unheated welding shall be agreed with the Register at approving welding procedures.

In the following cases the edges of parts to be welded shall be preheated at least to 20 °C over a width of 100 mm to both sides of the weld at ambient temperature:

up to – 25 °C for higher strength steels where the parts of the weld are more than 20 mm in thickness;

below – 15 °C for forgings and castings used for ship hull;

below – 10 °C for parts of joints made of semi-killed steel.

To be preheated is the side of the joint to be welded first.

If during welding the ambient temperature drops below the minimum permissible value, the welding shall be stopped after filling in the groove on one side of the joint and making the back sealing run or the first run on the other side. Prior to welding renewal after the stop, reheating or redrying of the edges shall be performed, where necessary.

2.1.5 The welding of piping made of low alloy steel, piping of the steam main as well as piping, which shall operate at temperatures above 350 °C, shall not be conducted at temperatures below zero.

2.1.6 The structural requirements for welds aimed at ensuring their strength shall be found in the relevant parts of the Rules.

2.1.7 The edge preparation of the parts to be welded shall be carried out in accordance with the agreed standards or drawings approved by the Register.

2.1.8 The edges of parts to be welded shall be prepared by methods, which ensure the required quality of welded joints in accordance with the requirements of the Rules.

2.1.9 From the edges of the parts to be welded, oil, moisture, scale, rust paint and other contaminating substances shall be removed. Steel parts coated with a primer may be welded without removing it; in this case the primer shall be of a type approved by the Register in accordance with 6.5.4.3, Part XIII "Materials".

2.1.10 When structures are welded, the sequence of welding operations shall be such as to ensure the absence of excessive residual stresses or distortions.

2.1.11 When it is necessary to preheat the parts to be welded, the preheating temperature shall be determined taking into account chemical composition of metal, welding process, thickness of parts to be welded, level of weld stresses and conditions of heat transfer through the structure from the weld zone.

When complex structures are welded, the preheating temperatures shall be specified in the documentation submitted to the Register for approval.

2.1.12 Welding and cutting under water as well as welding operations on structures with water present on the reverse side during the welding process may be allowed by the technological instructions and/or the standards of the manufacturer, including the control methods approved by the Register.

2.1.13 When plates, sheets and the like shall be welded into a rigid contour, technological measures shall be taken to reduce the stresses caused by welding. An opening with closed perimeter is considered to have the rigid contour if any of its dimensions is less than 60 plate thicknesses in the considered spot. For complex structures a contour may be regarded as rigid even at greater ratios of opening dimensions.

2.1.14 Dressing of welded structures is permitted within reasonable limits only. Hot dressing with mechanical effect and without one is permitted. When doing this, no damage to the joint or plate surface is admissible. For hot dressing, the temperature shall not exceed 650 °C, but in no case shall the heating involve changes in the metal structure.

2.1.15 Postweld heat treatment is required to eliminate residual stresses.

The type of heat treatment shall be determined by the manufacturer proceeding from the properties of material, and it shall be agreed upon with the Register.

2.1.16 Welding of cold formed parts made of hull structural steel may be carried out without any heat treatment if the inside bending radius meets the agreed standards. In the absence of such standards, the radius shall be not less than three times the thickness of the plate.

2.1.17 Welding consumables with controllable hydrogen content in the deposited metal shall be stored and calcinated before use in compliance with the manufacturer's recommendations.

2.2 WELDING OF SHIP HULL AND EQUIPMENT

2.2.1 The parts shall be assembled in such a way that the stresses arising during assembly and welding are as low as possible. Tack welding shall be performed only by persons possessing the necessary qualifications. Tack welding shall be carried out using welding consumables of the grades required for welding structural components. Tack welds shall be free from any defects, which could impair the quality of welded joints.

The tack welds shall be checked for absence of cracks or other defects. When cracks occur in way of tack welds, they shall be cut out to sound metal and rewelded. Temporary fittings used for assembly shall be kept to a minimum and be welded and tack-welded in conformity with the requirements stated above.

Excessive cutouts and other damage to the base metal that occurs while removing temporary fittings shall be rewelded and the rectified areas dressed to ensure gradual transition to the base metal. In doing so, the reduction of the base metal thickness shall not exceed the permissible tolerances for plate thickness specified in agreed standards.

Protruding remainders of welds used for the attachment of temporary fittings to the hull structure parts listed below shall be removed and then dressed (the permissible reinforcement shall not exceed the tolerances for butt weld reinforcement for the structures concerned):

.1 strength deck (plating and longitudinal framing members including continuous side coamings of cargo hatches);

.2 bottom (plating and longitudinal framing members);

.3 sides;

.4 sheerstrake and bilge strake (plating and longitudinal framing members);

.5 bulkheads forming boundaries of tanks;

.6 deep framing members in tanks;

.7 structures in areas of intensive vibration.

For other structures the necessity of dressing the welds after removal of temporary fittings shall be determined by the customer.

2.2.2 When butt joints are being assembled, mutual misalignment of plates up to 0,1 of their thickness but not over 3 mm is admissible.

2.2.3 Undercuts in excess of values stated in Tables 3.3.2-1 and 3.3.2-2 may be rewelded or grounded.

2.2.4 Choice of welding consumables grades for welding of normal and higher strength steel structures.

Welding consumables shall be employed for welding those steel grades, for which they were permitted by the Register in accordance with Table 2.2.4. Besides the following requirements shall be followed:

.1 when joining normal to higher strength hull structural steel, welding consumables of the lowest acceptable grade, according to Table 2.2.4 and this paragraph, for either steel being joined may be used (for instance, for welded joint of Grades D and E32 steels, the welding consumables of Grade 2Y may be used);

.2 when joining steels of the same strength level but with different requirements for impact test temperature, welding consumables of the lowest acceptable grade, according to Table 2.2.4, for either steel being joined may be used (for instance, for welded joint of Grades D32 and E32 steels, the welding consumables of Grade 2Y may be used);

.3 when joining higher strength hull structural steel to the same or normal strength hull structural steel, controlled diffusible hydrogen type welding consumables, according to Table 4.2.3.4, shall be used. Other welding consumables may be used only on the permission of the Register for steels having the carbon equivalent (refer to 3.2.2, Part XIII "Materials") $C_{eq} \leq 0{,}41$ following tests according to the program approved by the Register;

.4 the welding consumables approved for steel Grades A40, D40, E40 and/or F40 may also be used for corresponding Grades A, B, D, E of normal steel strengths only on submission of positive tests results carried out according to the program approved by the Register;

Table 2.2.4

Grade of welding consumables	Hull structural steel											
	normal strength				higher strength							
	A	B	D	E	A32, A36	D32, D36	E32, E36	F32, F36	A40	D40	E40	F40
1, 1S, 1T, 1M, 1TM, 1V	+	–	–	–	–	–	–	–	–	–	–	–
1YS, 1YT, 1YM, 1YTM, 1YV	+	–	–	–	+[1]	–	–	–	–	–	–	–
2, 2S, 2T, 2M, 2TM, 2V	+	+	+	–	–	–	–	–	–	–	–	–
2Y, 2YS, 2YT, 2YM, 2YTM, 2YV	+	+	+	–	+	+	–	–	–	–	–	–
2Y40, 2Y40S, 2Y40T, 2Y40M, 2Y40TM, 2Y40V	Refer to 2.2.4.4				+	+	–	–	+	+	–	–
3, 3S, 3T, 3M, 3TM, 3V	+	+	+	+	–	–	–	–	–	–	–	–
3Y, 3YS, 3YT, 3YM, 3YTM, 3YV	+	+	+	+	+	+	+	–	–	–	–	–
3Y40, 3Y40S, 3Y40T, 3Y40M, 3Y40TM, 3Y40V	Refer to 2.2.4.4				+	+	+	–	+	+	+	–
4Y, 4YS, 4YT, 4YM, 4YTM, 4YV	+	+	+	+	+	+	+	+	–	–	–	–
4Y40, 4Y40S, 4Y40T, 4Y40M, 4Y40TM, 4Y40V	Refer to 2.2.4.4				+	+	+	+	+	+	+	+
5Y40, 5Y40S, 5Y40T, 5Y40M, 5Y40TM, 5Y40V	Refer to 2.2.4.4				+	+	+	+	+	+	+	+
[1] Refer to 2.2.4.5.												

.5 when joining higher strength steels using Grades 1YS, 1YT, 1YM, 1YTM, 1YV grade welding consumables, the material thickness shall not exceed 25 mm;

.6 the welding consumables in Table 2.2.4 may also be used for welding of steel other than that shown in the table if the mechanical properties and chemical composition of such a steel are equivalent to the same of the steel, for which the given welding consumable was approved;

.7 rutile electrodes shall not be used for welding the following joints:

mounting butt joints of ship sections;

all butts and seams of the ice belt of shell plating;

butt joints of longitudinal members;

butt joints of hull structure more than 20 mm thick;

solid structures (sternframe, stem, etc.), as well as butt joints to be welded in a rigid contour (a contour is considered rigid when the ratio of its minimal dimension to the plate thickness is less than 60);

.8 oxide-coated electrodes shall not be used for welding of structures regulated by Part II "Hull".

2.2.5 Choice of welding consumables grades for welding of high strength steel structures.

Welding consumables shall be employed for welding those high strength steel grades, for which they were permitted by the Register according to Tables 2.2.5-1 and 2.2.5-2.

Besides, the following restrictions and requirements shall be followed:

.1 the scope of application of the particular welding consumable grade may be limited, based on the test results, to one base metal grade and not be extended to the high strength steel lowest grades according to Table 2.2.5-2;

.2 when joining high strength hull structural steel to the same and also joining high strength steel to higher or normal strength hull structural steel, controlled diffusible hydrogen

type welding consumables, having the classification indices H5 or H10, according to Table 4.2.3.4, shall be used;

Table 2.2.5-1

Identification of welding consumables grades by test temperature	Identification of high strength steel grades by impact test temperature			
	A(420/960)	D(420/960)	E(420/960)	F(420/690)
3Y (42/96)	+	+	–	–
4Y (42/96)	+	+	+	–
5Y (42/69)	+	+	+	+

Table 2.2.5-2

Identification of welding consumables grades by strength level	Identification of high strength steel grades by strength level							
	(A/F)420	(A/F)460	(A/F)500	(A/F)550	(A/F)620	(A/F)690	(A/E)890	(A/E)960
(3Y/5Y)42	+	–	–	–	–	–	–	–
(3Y/5Y)46	+	+	–	–	–	–	–	–
(3Y/5Y)50	+	+	+	–	–	–	–	–
(3Y/5Y)55	–	–	+	+	–	–	–	–
(3Y/5Y)62	–	–	–	+	+	–	–	–
(3Y/5Y)69	–	–	–	–	+	+	–	–
(3Y/4Y)89	–	–	–	–	–	–	+	–
(3Y/4Y)96	–	–	–	–	–	–	+	+

.3 the use of a single-run and two-run welding procedure for high strength steel welded joints is not recommended. The Register's approval may be given only based on the additional tests according to the program approved by the Register;

.4 the use of an electroslag and electrogas welding for high strength steel welded joints is not recommended. The Register's approval may be given only based on the additional tests according to the program approved by the Register;

.5 the use of a multi-arc and one-side welding on backs of different types for high strength steel welded joints is not recommended. The Register's approval may be given only based on the additional tests according to the program approved by the Register;

.6 rutile and oxide-coated electrodes shall not be used for high strength steel structures welding;

.7 the use of all grades welding consumables, tested according to requirements in 4.6, for high strength steel welding is permitted only for base metal joints up to 70 mm thick. The use of welding consumables for welding of steel over 70 mm thick may be allowed only based on the additional tests according to the program approved by the Register;

.8 for grades Y89 and Y96, where the design requirements permit undermatching weld joint, then welding consumables of the lowest grade acceptable in accordance with the requirements of Table 2.2.5-2 for welding of high strength steel may be used. The said conditions shall be agreed with the Register (technical justification shall be presented) and indicated during the issue of Welding Procedure Approval Test Certificate.

2.2.6 Choice of welding consumables grades for welding of hull structural steel structures operating at low temperatures.

Welding consumables for welding of hull steel structures operating at low temperatures shall be used in accordance with requirements in Table 2.2.6. Besides, when grades of welding consumables for welding of higher strength steels with the index F are specified, the requirements listed in 2.2.4 shall be followed including the following additions:

.1 depending on the function and operational conditions of structures, the Register may specify the higher grade of welding consumables (for instance, 5Y instead of 4Y and 5Y40 instead of 4Y40);

.2 the use of Grades 4Y46 and 5Y46 welding consumables, intended for high strength steel welding, is subject to additional agreement with the Register.

Table 2.2.6

Grade of welding consumables	Grade of hull structural steel		
	F32	F36	F40
4Y, 4YS, 4YT, 4YTM, 4YV	+	+	–
4Y40, 4Y40S, 4Y40T, 4Y40M, 4Y40TM, 4Y40V	+	+	+
5Y, 5YS, 5YT, 5YM, 5YTM, 5YV [1]	+	+	–
5Y40, 5Y40S, 5Y40T, 5Y40M, 5Y40TM, 5Y40V [1]	+	+	+
4Y42, 4Y42S, 4Y42MM	–	+	+
5Y42, 5Y42S, 5Y42M [1]	–	+	+
4Y46, 4Y46S, 4Y46M	–	+[2]	+
5Y46, 5Y46S, 5Y46M [1]	–	+[2]	+

[1] Refer to 2.2.6.1.
[2] Refer to 2.2.6.2.

2.2.7 Assignment of welding consumable grades for welding of hull structural aluminium alloys.

Welding consumables for welding hull structural aluminum alloys depending on their grade shall be used in compliance with the requirements in Table 2.2.7-1.

Table 2.2.7-1

Grade of welding consumable	Hull structural aluminium alloys												
	International						National						
	5754	5086	5083	5383, 5456	5059	6061, 6005A, 6082	1530	1550	1561	1565ч	1575	(AlSiMgMn)	1581
RA/WA (5754)	+	–	–	–	–	–	+	–	–	–	–	–	–
RB/WB (5086)	+	+	–	–	–	–	+	–	–	–	–	–	–
RC/WC (5083)	+	+	+	–	–	+	+	+	–	–	–	+	–
RC/WC (5383)	+	+	+	+	–	+	+	+	–	–	–	+	–
RC/WC (5456)	+	+	+	+	–	+	+	+	–	–	–	+	–
RC/WC (5059)	+	+	+	+	+	+	+	+	+	+	–	+	+
RD/WD (6061)	–	–	–	–	–	+	–	–	–	–	–	+	–
RD/WD (6005A)	–	–	–	–	–	+	–	–	–	–	–	+	–
RD/WD (6082)	–	–	–	–	–	+	–	–	–	–	–	+	–
R1/W1 (1530)	+	–	–	–	–	–	+	–	–	–	–	–	–
R2/W2 (1550)	+	+	+	–	–	+	+	+	–	–	–	+	–
R3/W3 (1561)	+	+	+	+	+	+	+	+	+	+	–	+	+
R3/W3 (1565ч)	+	+	+	+	+	+	+	+	+	+	–	+	+
R3/W3 (1581)	+	+	+	+	+	+	+	+	+	+	+	+	+
R4/W4 (1565ч)	–	–	–	–	–	–	–	–	+	+	+	+	+
R4/W4 (1575)	–	–	–	–	+	–	–	–	+	+	+	–	+
R4/W4 (1581)	–	–	–	–	–	–	–	–	+	+	+	+	+
R5/W5 (AlSiMgMn)	–	–	–	–	–	+	–	–	–	–	–	+	–

The practical areas of application for the most common international and national filler materials, which shall be followed in their approval, are given in Table 2.2.7-2.

Table 2.2.7-2

Brand of welding consumable		Hull structural aluminium alloys												
		International						National						
Designation	Code of chemical composition	5754	5086	5083	5383, 5456	5059	6061, 6005A, 6082	1530	1550	1561	1565ч	1575	(AlSiMgMn)	1581
International materials[1]														
–	AlMg3	+	–	–	–	–	–	+	–	–	–	–	–	–
5356	AlMg5	+	+	+	–	–	+	+	+	–	–	–	+	+
5183	AlMg4,5Mn	+	+	+	+	–	+	+	+	–	–	–	+	+
–	AlMg6Mn1	+	+	+	+	+	+	+	+	+	–	–	+	+
National materials[2]														
СвАМг3	AlMg3	+	–	–	–	–	–	+	–	–	–	–	–	–
СвАМг5	AlMg5	+	+	+	–	+	+	+	+	–	–	–	+	+
СвАМг61	AlMg6Mn1	+	+	+	+	+	+	+	+	+	+	–	+	+
Св01597	–	–	–	–	–	+	–	–	–	+	+	+	–	+

[1] Designations of the most common filler materials for welding international aluminium alloys (welding processes 141 = TIG and 131 = MIG) in accordance with ISO 18273:2015.

[2] Designations of welding wire brands for welding national aluminium alloys used in shipbuilding in accordance with the Russian standard GOST 7871:2019 (welding processes 141 = TIG and 131 = MIG).

2.3 WELDING IN SHIP MACHINERY CONSTRUCTION

2.3.1 The present requirements apply to the welding of ship machinery structures manufactured using base materials and welding consumables, which are in accordance with Part XIII "Materials" and this Part. Manufacturing of structures from materials not regulated by the Rules shall be effected on agreement with the Register.

2.3.2 Welding consumables for machinery and machinery installations shall be chosen on the basis of steel grades used for the manufacture bearing the requirements of 2.2.4 — 2.2.6 in mind.

2.3.3 When structures are intended for operation at high temperatures or in a chemically aggressive medium, those conditions shall be taken into account when selecting the welding consumables.

2.3.4 For welding of steel parts 30 mm and more in thickness used in ship machinery construction, welding consumables shall be applied, which would guarantee the cold cracking resistance of the weld, or the manufacturer shall take technological measures (preheating, heat treatment, limiting of ambient air temperature during welding, etc.) to eliminate cold cracking.

2.3.5 The welds in structures, which shall be exposed to dynamic loads, shall be executed with full penetration. The transition from the base metal to the weld shall be smooth.

2.3.6 When shafts for ship shafting or crankshafts are fabricated, the application of welding may be allowed by the methods approved by the Register on submitting the data confirming their continuous successful application results.

For this purpose, the necessary conditions are that all the welds were subjected to non-destructive testing and the fatigue strength of welded joints adopted in the calculations were guaranteed.

The amount of experimental welding necessary and the test program shall be agreed with the Register before welding is commenced.

2.3.7 The application of welding including building-up, metal pulverization and other similar methods, when manufacturing or repairing ship machinery items, may be permitted if tests carried out in accordance with the procedure agreed with the Register and confirming the possibilities of applying the method in question at a particular works yield good results.

Repairs to ship shafts of carbon steel (with up to 0,45 % carbon content), which are worn or have surface cracks, may be performed by building-up, provided the amount of wear or the depth of cracking does not exceed 5 % of the shaft diameter, but it shall not be over 15 mm.

2.4 WELDING OF STEAM BOILERS AND PRESSURE VESSELS

2.4.1 Welded joints of boilers shall be so marked as to make it possible to identify the operator having performed the welding.

Longitudinal and circumferential welds of boiler shells shall be made with a back-sealing run except when the efficiency factor of welded joints φ according to Table 2.1.6.1-1, Part X "Boilers, Heat Exchangers and Pressure Vessels" is adopted to be 0,7 or less.

Cuts and openings in the boiler shell shall not, as far as possible, cross circumferential or longitudinal joints in the shell.

The possibility of fixing, by welding, any fastenings, catches and other parts to the boiler shell shall be specified in the documentation submitted to the Register.

2.4.2 Welding consumables for boilers and pressure vessels shall be chosen on the basis of steel grades used for the manufacture bearing the requirements of 2.2.4 — 2.2.6 in mind.

2.4.3 Rutile and oxide-coated electrodes are not permitted for the welding of boilers and pressure vessels of Class I (refer to 1.3.1.2, Part X "Boilers, Heat Exchangers and Pressure Vessels"). They are permitted for boilers and pressure vessels of Class II and Class III, provided those structures are manufactured of carbon steel and the thickness of parts to be welded is not in excess of 20 mm.

2.4.4 The heat treatment of boilers and pressure vessels shall be carried out in accordance with the agreed standards or account shall be taken of the instructions of steel manufacturers.

The welded joints in parts, which cannot be heat treated as a whole for stress relieving because of their dimensions or inappropriate structure, may be subjected to local heat treatment on agreement with the Register. Such a treatment shall be performed by uniform warming-up of a sufficiently wide area along the weld (for a distance about 6 times the plate thickness on both sides of the joint) so as to prevent the spread of thermal stresses to other areas of the parts involved. Local treatment by means of a welding torch is prohibited.

2.4.5 When openings in boilers are closed up by means of plugs fixed by welding, the requirements of agreed national standards shall be met.

2.4.6 Worn-out shell plates of boilers and pressure vessels may be repaired by building-up only on agreement with the Register. The built-up area shall not exceed 500 cm^2, and its depth shall not be over 30 % of the plate thickness. If these conditions cannot be met, the faulty area shall be repaired by inserting a new plate.

2.4.7 When manufacturing boilers, heat exchangers and pressure vessels belonging to Class I or Class II (refer to 1.3.1.2, Part X "Boilers, Heat Exchangers and Pressure Vessels"), test samples shall be prepared to check up the mechanical properties of welded joints in the case of unique products being manufactured, serial production, on the prototype product, alterations in the structure of main units and parts, application of new materials and welding processes.

Test samples for products belonging to Class III shall be prepared, if required by the Register.

2.4.8 The test samples shall be attached to the longitudinal joint of a boiler or pressure vessel in such a way that the test plate joint is a continuation of the joint of the boiler or pressure vessel. The welding procedure shall be the same as employed in the welding of the boiler or pressure vessel joint.

A test assembly thus prepared shall provide one transverse tensile test piece, two transverse bend test pieces, three impact test pieces cut out according to Fig. 4.3.3.1.

Specimens for structures belonging to Class III shall be prepared, if required by a surveyor to the Register. The requirements for cutting specimens from the test assembly and for testing them shall be in accordance with the requirements of 4.2.2.

2.5 WELDING OF PIPELINES

2.5.1 The type of welded joints in pipes shall comply with the agreed standards.

2.5.2 Welding consumables for pipelines shall be chosen on the basis of steel grades used for the manufacture bearing the requirements of 2.2.4 — 2.2.6 in mind.

2.5.3 In the welded butt joints of pipes full root penetration shall be provided. Welding with the use of removable backing rings is permitted.

2.5.4 The use of the remaining backing rings in butt joints is permitted in pipelines where those rings do not adversely affect the performance. The remaining backing rings shall not be used for flange-to-pipe butt joints.

2.5.5 The welded joints in pipes shall be heat treated in the case of pipes of low-alloyed steels and in the case of gas welding of main steam pipelines operating at temperatures above 350 °C.

2.5.6 When welding pipes of chrome-molybdenum steel containing 0,8 % or more of chromium and more than 0,16 % of carbon, the edges to be welded shall be preheated to a temperature 200 — 230 °C. This temperature shall be maintained during welding.

2.5.7 Before welding, the edges of copper pipes with a wall thickness 5 mm and over shall be heated to a temperature 250 — 350 °C. Copper-nickel pipes shall be welded without preheating.

2.6 WELDING OF CASTINGS AND FORGINGS

2.6.1 Regardless of ambient air temperature, the welding of steel castings and forgings shall be effected with preheating, or other technological measures shall be taken to guarantee that the requirements for welded joints are satisfied in the following cases:

.1 for steel castings and forgings with carbon content exceeding 0,25 %;

.2 for steel castings and forgings with carbon content exceeding 0,23 % when those castings and forgings are part of the hull structure of **Arc4** to **Arc7** ice class ships (castings and forgings of sternframes, stems, propeller shaft brackets, etc.).

2.6.2 The temperature of preheating and the heat treatment procedure for castings and forgings shall be determined depending on the design, size and service conditions of the structure concerned in accordance with 2.1.4, 2.1.12, 2.1.16.

2.6.3 The faults in castings and forgings may be repaired by welding only when the steel in question has been previously checked for weldability with due regard to the service conditions of the cast or forged part.

Repairs of faults by welding shall generally be undertaken prior to the final heat treatment. After it, rewelding is permitted only by way of exception. Repetitive faults in castings and forgings are not permitted for repair by welding.

2.6.4 The rewelding of faults in castings shall be made after sprues and heads have been removed and the castings thoroughly cleaned of sand, scale and extraneous inclusions. The surface subject to repair shall be ground to sound metal so as to provide for penetration throughout the welded area.

The surfaces of areas to be rewelded shall be gently sloped and shall not have sharp corners.

2.7 WELDING OF CAST IRON

2.7.1 Repair of cast iron by welding is permitted on agreement with a surveyor to the Register using a welding process approved by the Register and proceeding from the results of testing by a program agreed with the Register.

2.8 WELDING OF CLAD STEELS

2.8.1 Welding processes for clad steel shall be approved in accordance with Section 6, Part III "Technical Supervision during Manufacture of Materials" of Rules for Technical Supervision during Construction of Ships and Manufacture of Materials and Products for Ships, the welding consumables – in accordance with Section 4.

Edge preparation for parts to be welded shall be carried out in accordance with the agreed national standards or drawings approved by the Register.

Preparation of the edges shall be effected by machining or grinding. The edges of parts to be assembled shall fit each other closely and shall not be out of alignment on the clad surface.

2.8.2 The corrosion resistance of weld metal on the clad side shall be equal to that of the cladding. The thickness of the corrosion-resistant layer of the weld shall not be less than that of the cladding.

The chemical composition of weld metal on the clad size (except the root zone) shall correspond to the chemical composition of the cladding metal.

2.8.3 As a rule, the weld shall be made first on the plate surface, which is opposite to the clad surface and then on the clad side. Welding on the non-clad side shall be so done that no melting of the cladding layer occurs. Prior to welding on the clad side the root of an unalloyed weld shall be cut out to sound metal by machining or grinding. For a back-sealing run the same welding consumables shall be used as for welding the cladding layer. The cladding layer shall be welded so as to reduce, as far as possible, the interpenetration of alloyed and unalloyed materials. For welding the cladding layer, welding electrodes and wires of the smallest diameter possible shall be used. The welding shall be carried out, as far as possible, at a low rate of energy input. The weld on the clad surface shall be made up of two layers at least. In welding the cladding layer, transverse weaving of electrode is not permitted. Where the top layer width is such that it shall be deposited in several runs, the last run shall be made along the middle of the weld.

2.8.4 In welding pipes of clad steel, where welding on both sides is not feasible, the entire joint shall be welded with the use of welding consumables suitable for the cladding material. When welding clad plate steel, the entire joint shall also be welded with the use of welding consumables suitable for the cladding material.

2.9 BRAZING

2.9.1 Brazed joints in structures specified in 1.1.1 are subject to survey by the Register. They shall be carried out in accordance with the agreed standards or technical documentation.

2.10 WELDING OF ALUMINIUM AND ITS ALLOYS

2.10.1 Welding operations shall be performed by the most expedient method, which would ensure good quality joints of required strength with their chemical composition similar to that of the base metal and having sufficient corrosion resistance.

2.10.2 Wherever possible, welded joints shall be located in areas exposed to the lowest stresses.

As a rule, welding shall be effected in the down-hand position. Weld reinforcement may be removed only subject to the special approval of the Register.

2.10.3 Immediately before welding (tack welding) the edges of aluminium or aluminium alloy components shall be degreased with special solvents (acetone, alcohol, etc.) and then cleaned with wire brushes. Jacked spots are also to be cleaned with a steel wire brush before welding. In the case of multirun welding, each run of deposit shall be brushed before the next run is applied.

2.10.4 Welding consumables of aluminium and aluminium alloys shall have their surfaces cleaned from dirt and oxide film.

2.10.5 For aluminium alloys, welding on remaining or removable backings is permitted. The backings to be removed after welding shall be of stainless steel. The backings that are not removed shall be made of the same kind of alloy as that used for the parts to be welded.

2.10.6 In the case of a double-welded joint, before a sealing run is applied to the back of the weld, a groove shall be made by root-run chipping, planing or milling to clean metal. Cutting out of the root by means of abrasive disks is not permitted.

2.10.7 Hot straightening of structures made of aluminium and aluminium alloys is permitted. The heating temperature range for straightening shall be within the limits corresponding to the properties of the alloy.

2.10.8 Where a flux is used, it shall, as a rule, be neutral. If, by way of an exception, the flux used was not neutral, it shall be carefully removed after welding.

2.10.9 On riveted structures made of aluminium alloys, all major welding operations shall be completed before riveting.

2.10.10 Application of friction stir welding.

Friction stir welding (FSW) may be applied for items of technical supervision by the Register made of aluminium alloys. In addition, relevant Parts of the RS rules regulating the structure of these items shall specified the possibility to use this type of welding as applied to the particular type of welded joint. FSW procedure shall be based on the requirements of ISO 25239:2011. Requirements for certification of welding operators and approval of FSW production process are given in 4.1, 4.4.7, 4.5.10 and 7.6, Part III "Technical Supervision during Manufacture of Materials" of the Rules for Technical Supervision during Construction of Ships and Manufacture of Materials and Products for Ships.

2.10.10.1 Shells for tank-containers.

FSW may be applied only for butt welds produced by double-sided welding.

2.11 WELDING OF COPPER AND COPPER ALLOYS, HEAVY METALS AND OTHER NON-FERROUS METALS

2.11.1 Welding of copper and copper alloys as well as of heavy metals and other non-ferrous metals shall be carried out in accordance with the agreed standards or documentation approved by the Register.

2.12 WELDING OF HIGH STRENGTH STEELS

2.12.1 The welding consumables designed for welding of high strength steels shall be approved in accordance with 4.7, and the welding processes – in accordance with Section 6, Part III "Technical Supervision during Manufacture of Materials" of Rules for Technical Supervision during Construction of Ships and Manufacture of Materials and Products for Ships.

2.12.2 The process and procedure of welding shall be approved by the Register after fabrication testing by an agreed program. For this, the manufacturer of welded structures shall submit the documented preheating temperature, linear power comsumption during welding, postweld heat treatment, and temperature between runs.

The manufacturer shall use a welding condition recording system including the temperature between runs and submit the inspection results to the Register upon request.

2.12.3 Welded joints shall be made by multirun welding.

Single-run welding may be permitted only on agreement with the Register.

Each run shall be continuous with minimum arc fluctuations.

2.12.4 Arc firing outside the edges prepared for welding is not permitted.

Welding-on of temporary mounting fittings may be permitted provided the Register requirements for consumable materials and the local heating temperature are complied with.

As a rule, temporary fittings are removed by machining with subsequent dressing flush with the base metal surface.

Preliminary gas cutting shall be followed by the machining of the remaining part and by dressing.

2.12.5 The edges prepared by gas cutting shall be machined after such cutting. Roots shall be removed by machining only. The heating temperature for straightening is subject to approval by the Register in each case. The required properties of the base metal and welded joint shall be ensured.

2.12.6 Welding YH47 steel.

2.12.6.1 Short bead length for tack and repairs of welds by welding shall not be less than 50 mm. In the case where P_{cm} is less than or equal to 0,19 $P_{cm} \leq 0{,}19$ (refer to Table 3.19.2.1.1, Part XIII "Materials"), 25 mm of short bead length may be adopted.

2.12.6.2 Preheating when welding YH47 steels shall be 50 °C or over when air temperature is 5°C or below. In the case where $P_{cm} \leq 0{,}19$ and the air temperature is below 5 °C but above 0°C, alternative preheating requirements may be adopted with RS approval.

2.12.6.3 Special care shall be taken with the final welding so that harmful defects do not remain. Jig mountings shall be completely removed with no defects in general, otherwise the treatment of the mounting shall be approved by the Register.

2.12.7 Welding work (such as relevant welder's qualification, short bead, preheating, selection of welding consumable, etc.) for brittle crack arrest steels shall be in accordance with the relevant requirements for each steel grade excluding index "BCA1" or "BCA2" (refer to 3.19.2.2, Part XIII "Materials").

2.13 WELDING OF TITANIUM AND TITANIUM ALLOYS

2.13.1 Welding operations shall be performed appropriately to provide qualitative welding joint, its maximum strength with their chemical composition similar to that of the base metal.

2.13.2 Welding shall be performed in any welding position.

2.13.3 At welding bays the local air flow velocity shall not exceed 0,3 m/s. The measurement of the air flow velocity shall be performed with anemometers manually (hand-held anemometers). In this regard, welding workplaces in welding assembly bays shall be located so as to prevent any draughts and local air flows. Whenever necessary the welding area shall be protected.

2.13.4 At welding bays the work associated with formation of excessive emissions of fumes and gases is prohibited.

2.13.5 To ensure the removal of polluted and clean air feed welding production facilities (workshops) shall have air exhaust-and-forced ventilation. In cold time the supply air shall be heated up. Operation of ventilation installations and compressed-air tools in the workshops and at welding shall be arranged so as not to disrupt gas protection during welding.

2.13.6 Total illumination in working spaces during work shall not be less than 50 lux. Except general illumination there shall be provided local lighting – directly at the workplaces:

not less than 75 lux – while checking the quality of welding joints by visual examination;

not less than 150 lux – during input inspection of welding consumables and the quality control of their preparation.

2.13.7 The ambient temperature of the spaces depends on their purpose and shall be:

not less than 17 °C – in spaces for preparation of welding consumables and degreasing solvents, vacuum annealing, etching, manufacture of shielding gas backing devices, store rooms for storage of packaged and accepted welding consumables, as well as test and measurement instrumentation;

not less than 5 °C – in the spaces to carry out cleaning, gas cutting and welding works.

Welding operations performance is approved shall the temperature drop inadmissibly to 1 °C, while preventing the safety of welding equipment from water freezing in the water hoses.

2.13.8 Relative air humidity in working spaces for preparation of filler metals and that in store rooms for packaged and accepted welding consumables shall not exceed 75 %.

During the period from May to September, an increase in relative humidity up to 80 % is admissible. At relative air humidity in store rooms being more than 80 %, the heating appliances shall be switched on.

2.13.9 Wall and floor liners of working spaces shall ensure easy dust elimination and shall not be a source of dust formation. The cement floor is permitted only in the area of access driveway.

2.13.10 Clean working spaces shall be maintained with periodic cleaning with a vacuum cleaner or other means, as well as frequent wet cleaning. Wet cleaning in working spaces of wire and welding preparation shall be carried out as follows:

of floor – at least two times per shift (before work and during lunch break);

of equipment, jigging, shelving and assembled structures for welding – at least once a week;

walls at a height up to 3 m and structures where assembly and welding works are not performed – at least once a month;

walls at a height of over 3 m, windows, lanterns, crane gantries, pipeline ventilation – at the next minor repairs of a welding shop. As of the equipment installation on the product wet cleaning of walls and structures above the product shall not be carried out.

2.13.11 During preparation of the components and structures to be welded the following shall be provided:

.1 mechanical treatment of welded edges and surfaces.

The quality of mechanical treatment of welded edges and surfaces is subject to acceptance by the Quality Control Department (QCD). After mechanical treatment the welded surfaces and edges as well as surfaces of the parts shall have the following roughness as per parameter Ra (not over):

20 μm — in the joints of steel plate structures of thickness over 15 mm made by any type of welding;

10 μm — in the joints of steel plated structures of thickness less than 15 mm, made by any type of welding and the pipeline design with wall thickness exceeding 5 mm made by any type of welding;

5 μm — in the pipe joints of thickness over 15 mm, made by any type of welding.

.2 dressing of the areas to be welded, as well as the adjacent surfaces.

Dressing shall be performed as follows:

in a mechanized or manual manner with brushes;

with abrasive disks followed by dressing with a file brush;

with boring cutter followed by dressing with a file brush;

hand-scraping — in preparation of sheet and pipe welded joints;

with sandpaper — in preparation of welded joints in pipes.

From the oxidized surface parts of in way of the welds an oxidized layer shall be arranged at a depth of not less than 100 μm — in case of antifriction oxidation or to metallic blushing or — with protective oxidation.

.3 degreasing welded surfaces and edges with adjacent surfaces.

During the degreasing operation it is necessary to use special degreasing agents (aqueous washings, acetone, spirit, etc.) depending on the use of semi-finished products to manufacture structures. When applying aqueous washes, after washing areas shall be wiped dry with clean white calico napkins, and in case of application of acetone or spirit-dried in the air.

When welding pipelines to reduce the pore formation in the preparation of welded edges it is recommended to carry out a special cleaning including:

degreasing in an aqueous trisodium phosphate solution

etching in the solution of nitric (mass fraction of 30 — 40 %) and hydrofluoric acid (mass fraction of 3,5 — 6,0 %).

2.13.12 For quality assurance of welds where welding of titanium alloys is performed, required protection of the reverse side of welding joints shall be provided from effects of air (oxidation) with backing inert gas by methods of general protection of structures (in the spaces with inert controlled atmosphere or in vacuum) or local protection. Inert gas backing may be performed as follows:

with special gas protection arrangement removed along the weld or installed permanently;

feeding the internal volume of the design or its part;

with shielding gas backing filling the internal volume of piping.

2.13.13 Prior to welding operations it is necessary to check:

operation of all the welding equipment joints and machinery as well as control circuits, gas protection systems and water cooling;

main and auxiliary materials available at the welding site and required to carry out welding operations;

inert gas pressure in cylinders directly connected to the welding stations.

2.13.14 Welding wire and filler rods from a storeroom shall be distributed to a welder at the required for work during one shift rate.

Before the use of materials the welder shall check the wire surface and bars quality as well as their purity by wiping with a white coarse calico napkin (cloth).

Defective (substandard) and contaminated materials shall be refundable to the storeroom:

an annealing grey colour without metallic blushing:

wrinkles (wrinkled areas) as well as powdered deposit of any colour.

2.13.15 The quality of the performed weld is required to be assessed by the crater's surface colour:

silvery without a trace of annealing;

a pale yellow (straw) annealing colour is permissible;

other than light yellow (straw) annealing colours on the crater surface are considered impermissible.

During the oxidation of the crater to unacceptable annealing colours the welding shall be ceased, the factors causing metal oxidation shall be revealed and eliminated, and the weld (bead) is removed at the entire depth of penetration and length of oxidation.

It is prohibited to continue or finishing weld seams without eliminating the factors causing oxidation of the crater.

2.13.16 If the weld crater is of an admissible annealing colour, the quality of the protection of welds (beads) and base metal in the welding process shall also be assessed by their annealing colours as well as surface appearance.

Conditional permissible annealing colours on the surface of the joints and base metal:

light yellow (straw), brown and violet.

Unacceptable annealing colours and seams (beads) appearance:

blue, light blue, green and light green;

an annealing grey colour without metallic blushing;

wrinkles (wrinkled areas) as well as powdered deposit of any colour.

In case the conditional permissible annealing colours are available, the oxide film on the surface of welds (beads) and the base metal shall be removed. It is strictly forbidden to weld on the oxidized surfaces (with any annealing colour) and melt down on these areas.

Welds with impermissible annealing colours and appearance shall be removed at the entire depth of penetration.

Prior to welding the areas of welds (some beads) and the base metal surface shall be washed with a solvent after removal of oxidations and their dressing as well as during welding renewal after a break.

N o t e s: 1. Permissible annealing colours at the crater surface (light-yellow-straw) as well as conditional permissible annealing colours at the surface of seams and base metal (light-yellow-straw, brown and violet) define the planar oxidation that is a thin oxide film easily removable while cleaning with a steel brush.

2. In case any annealing colour except light yellow (straw) is available on the crater surface, irrespective of an annealing colour on the surface of the performed bead, the latter may be oxidized throughout the entire section (associated with oxidation during welding of a liquid pool) and in this case it is subject to relative removal.

3. Impermissible annealing colours on the surface of seams (blue, blue, green and light green) are either a proof of surface oxidation of oxide film thickness not amenable to adequate removal while grinding with a steel brush, or of weld metal bulk (volumetric) oxidation which hardness is less than the base metal hardness.

Beads with unacceptable annealing colours are subject to relative removal.

4. A grey annealing colour without metal blushing as well as wrinkled areas (wrinkles) and powdered deposit of any colour on the welded bead are a proof of volumetric oxidation, and the seam shall be removed at the entire penetration depth.

2.13.17 After welding is finished the extended backing strips shall be removed, ends of details shall be cleaned and inspection of cleaned locations shall be performed.

2.13.18 It is recommended to carry out single-run welds at any kind of welding with no breaks.

While performing multirun welds, welding of each subsequent run shall only be carried out after cooling the previous one.

The main criterion of sufficient cooling shall be absence of annealing colours on the crater's and bead's surfaces.

2.13.19 Straightening shall be used to eliminate general and local distortions of steel plate structures arising during manufacture. Straightening of titanium alloy structures shall be made with arc heating. Straightening is permitted to be performed with multirun welds. The heating temperature when straightening shall agree with the properties of the alloy.

3 TESTING OF WELDED JOINTS

3.1 GENERAL

3.1.1 Non-destructive testing methods.

3.1.1.1 Non-destructive testing of welded joints may be effected by the following main (refer to 3.1.1.1.1 — 3.1.1.1.6) and advanced (ADNT) (refer to 3.1.1.1.7 — 3.1.1.1.9) methods:

.1 visual testing (VT) and measurement testing;

.2 magnetic particle testing (MT);

.3 penetrant testing, including dye penetrant testing, fluorescent penetrant testing and fluorescent-dye penetrant testing (PT);

.4 radiographic testing, including X-ray testing and gamma-ray testing (RT);

.5 ultrasonic testing (UT);

.6 tightness testing (in compliance with Appendix 1, Part II "Hull" of the Rules for the Classification and Construction of Sea-Going Ships);

.7 digital radiography (RT-D):

.7.1 computed radiography using storage phosphor imaging plates (RT-CR);

.7.2 digital detector array radiography (DDA);

.8 phased array ultrasonic testing (PAUT): automated ultrasonic examinations (AUT) and semi-automatic ultrasonic examinations (SAUT)

.9 time of flight diffraction (TOFD).

Table 3.1.1.2-1

Generally accepted methods for detection of accessible surface imperfections for all types of welds, including fillet welds according to ISO 17635

Materials	Testing method
Ferritic steel	VT VT and MT VT and PT
Austenitic steel	VT VT and PT
Aluminium alloys	VT VT and PT
Copper-nickel alloys	VT VT and PT
Titanium alloys	VT VT and PT

Table 3.1.1.2-2

Generally accepted methods of detection of internal imperfections for butt and T-joints with full penetration in compliance with ISO 17635:2016

Materials and type of joint	Nominal thickness of base metal t, mm		
	$t \le 8$	$8 < t \le 40$	$t > 40$
Ferrite butt joints	RT or (UT)	RT or UT	UT or (RT)
Ferrite T-joints and fillet joints	(UT) or (RT)	UT or (RT)	UT or (RT)
Austenitic butt joints	RT	RT or (UT)	RT or (UT)
Austenitic T-joints and fillet joints	(UT) or (RT)	(UT) and/or (RT)	(UT) or (RT)
Aluminium butt joints	RT	RT or UT	RT or UT
Aluminium T-joints and fillet joints	(UT) or (RT)	UT or (RT)	UT or (RT)
Nickel and copper alloy butt joints	RT	RT or (UT)	RT or (UT)
Nickel and copper alloy T-joint and fillet joints	(UT) or (RT)	(UT) or (RT)	(UT) or (RT)
Titanium butt joints	RT	RT or (UT)	
Titanium T-joints and fillet joints	(UT) or (RT)	UT or (RT)	

N o t e . Methods in parenthesis are only applicable with: the lower boundary of the base metal thickness for ultrasonic testing method is determined with the applied equipment and standards.

In accordance with normative documents applied in shipbuilding ultrasonic testing for thicknesses of under 8 mm is not applied. For thicknesses of under 8 mm the Register may consider the possibility of using the appropriate advanced UT method in accordance with 3.1.1.1;

for radiographic testing the upper boundary of its application of the base metal thickness is determined as per the capabilities of radiation sources and exposure time (refer to 3.2.4);

the capability of using radiographic testing for T-joints and fillet joints is calculated by the ratio of thickness of the welded metal in the radiographic testing direction to the total thickness of the base and welded metal in the radiographic testing direction (the use of radiographic testing is not feasible with a decrease in this ratio of less than 0,3);

for materials with high degradation of the signals (austenitic steels, nickel and copper alloys) the use of ultrasonic testing method requires the use of special procedures.

On the contrary, ultrasonic testing is the most effective for the detection of plane (two dimensional) defects which are the most dangerous and impermissible in welded structures irrespective of their linear dimensions and location. Ultrasonic testing enables to determine the depth of the detected defects location which is essential for extraction and repair of defective weld parts. It is necessary to consider that this nondestructive testing method has limited capability for the classification of three-dimensional discontinuities and they are assessed in conditional numeric values.

3.1.1.3 The capabilities of advanced non-destructive testing methods (ANDT) applicable for testing of different types of weld joints are given in Table 3.1.1.3.

Table 3.1.1.3

Generally accepted methods of detection of internal imperfections for welded joints with full penetration in compliance with ISO 17635:2016

Materials and weld joints	Base material thickness, t	Applicable методs
Ferritic butt welds with full penetration	$t < 6$мм	RT-D
	6 mm $\le t \le$ 40 mm	PAUT, TOFD, RT-D
	$t >$ 40 mm	PAUT, TOFD, RT-D*
Ferritic tee joints and corner joints with full penetration	$t \ge$ 6 mm	PAUT, RT-D*
Ferritic cruciform joints with full penetration	$t \ge$ 6 mm	PAUT*
Austenitic stainless steel butt welds with full penetration [1]	$t <$ 6 mm	RT-D
	6 mm $\le t \le$ 40 mm	RT-D, PAUT*
	$t >$ 40 mm	PAUT*, RT-D*
Austenitic stainless steel tee joints, corner joints with full penetration [1]	$t \ge$ 6 mm	PAUT*, RT-D*
Aluminum tee joints and corner joints with full penetration	$t \ge$ 6 mm	PAUT*, RT-D*

Materials and weld joints	Base material thickness, *t*	Applicable методs
Aluminum cruciform joints with full penetration	$t \geq$ 6 mm	PAUT*
Aluminum butt welds with full penetration	$t <$ 6 mm	RT-D
	6 mm $\leq t \leq$ 40 mm	RT-D, TOFD, PAUT
	$t >$40 mm	TOFD, PAUT, RT-D*
Cast Copper Alloy	All	PAUT, RT-D*
Steel forgings	All	PAUT, RT-D*
Steel castings	All	PAUT, RT-D*
Base materials/Rolled steels, Wrought Aluminum Alloys	$t <$6 mm	RT-D
	6 mm $\leq t \leq$ 40 mm	PAUT, TOFD, RT-D
	$t >$ 40 mm	PAUT, TOFD, RT-D*

[1] The ultrasonic testing of anisotropic material using advanced methods will require specific procedures and techniques. Additionally, the use of complementary techniques and equipment may also be required, e.g. using angle compression waves, and/or creep wave probes for detecting defects close to the surface.

* Only applicable with limitations, need special qualification subject to acceptance by the Register.

3.1.2 Requirements for testing laboratories and personnel.

3.1.2.1 Non-destructive testing and quality assessment of welded joints shall be performed by testing laboratories (centres) which competence and status comply with the requirements for accreditation in accordance with national or international standards. The Recognition (Accreditation) Certificate issued by the Register or by other authorized national body is a document confirming competence of the testing laboratory. In the latter case the copy of the Certificate with supplements shall be submitted to the Register surveyor prior to start of welding.

Requirements for testing laboratories performing non-destructive testing and the procedure of their recognition by the Register comply with the provisions of Section 10, Part I "General Regulations for Technical Supervision" of the Rules for Technical Supervision during Construction of Ships and Manufacture of Materials and Products for Ships.

3.1.2.2 The shipbuilder or its subcontractors is responsible for the qualification and preferably 3rd party certification of its supervisors and operators to a recognized certification scheme based on ISO 9712:2012.

Personnel qualification to an employer-based qualification scheme as e.g. SNT-TC-1A, 2016 or ANSI/ASNT CP-189, 2016, may be accepted if the shipbuilder or its subcontractors written practice is reviewed and found acceptable by the Register. The shipbuilder or its subcontractors written practice shall as a minimum, except for the impartiality requirements of a certification body and/or authorized body, comply with ISO 9712:2012.

The supervisors' and operators' certificates and competence shall comprise all industrial sectors and techniques being applied by the shipbuilder or its subcontractors.

Level 3 personnel shall be certified by an accredited certification body.

3.1.2.3 The shipbuilder or its subcontractors shall have a supervisor or supervisors, responsible for the appropriate execution of NDT operations and for the professional standard of the operators and their equipment, including the professional administration of the working procedures. The shipbuilder or its subcontractors shall employ, on a full-time basis, at least one supervisor independently certified to Level 3 in the method(s) concerned as per the requirements of 3.1.2.4. It is not permissible to appoint Level 3 personnel; they must be certified by an accredited certification body. Shipbuilder or its subcontractors may not directly employ a Level 3 in all the stated methods practiced. In such cases, it is permissible to employ an external, independently certified, Level 3 in those methods not held by the full-time Level 3(s) of the shipbuilder or its subcontractors.

The supervisor shall be directly involved in review and acceptance of NDT Procedures, NDT reports, calibration of NDT equipment and tools. The supervisor shall on behalf of the shipbuilder or its subcontractors re-evaluate the qualification of the operators annually.

3.1.2.4 Certification levels.

3.1.2.4.1 The operator carrying out the NDT and interpreting indications, shall as a minimum, be qualified and certified to Level 2 in the NDT method(s) concerned and as described below.

However, operators only undertaking the gathering of data using any NDT method and not performing data interpretation or data analysis may be qualified and certified as appropriate, at level 1.

The operator shall have adequate knowledge of materials, welding, structures or components, NDT equipment and limitations that are sufficient to apply the relevant NDT method for each application appropriately.

3.1.2.4.2 A person certified in accordance with ISO 9712:2012 may be certified in one or more of the following three levels.

Level 1.

The person certified by Level I shall be competent to implement the non-destructive testing in accordance with the NDT instructions and under the supervision of personnel of Level 2 or 3. As part of the scope executed covered by the Certificate, Level 1 personnel can be qualified by the employer to perform the following steps in accordance with the instructions of non-destructive testing and in the field of competence, specified in the Certificate:

installation of non-destructive testing equipment;

implementation of control;

keep records and assess testing results;

draw a report on the results.

The personnel certified by Level 1, shall not bear responsibility for the choice of method or testing procedures, nor of assessment of results.

Level 2.

The person certified by Level 2, shall have the competence to implement the nondestructive testing in accordance with established procedures. Within the scope of the Certificate, Level 2 personnel may be entitled by the employer to:

select the non-destructive testing method to implement non-destructive testing procedure;

determine the limitations on the application of the testing method;

the use of sets of regulations (codes of practice), standards, specifications and procedures for non-destructive testing to make up practical instructions adapted to the actual operating conditions;

implementation of parameters set-up and check of the equipment tuning;

performance monitoring and supervision of control;

interpretation and assessment of results in accordance with the relevant legal regulations, standards, specifications and procedures;

preparation of NDT instructions;

execution and control of all the tasks of Level 2 or below Level 2;

ensure personnel management as per Level 2 or below Level 2; preparation of a report on the results of non-destructive testing (NDT).

Level 3.

The person certified by Level 3, shall show competence to implement and implement directly the non-destructive testing for which he is certified. Within the scope of the Certificate, Level 3 personnel may be entitled by the employer to:

accepting full responsibility for the day premises (spaces) for testing or examination centre and personnel;

framework, review of editorial and technical correctness and approval of NDT instructions and procedures;

interpretation of sets of regulations (codes of practice), standards, specifications and procedures;

assignment of specific testing methods, procedures and instructions used by nondestructive testing;

performance and control of all the tasks of all the levels; provision of management at all levels;

taking part in commissions on certification exams for non-destructive testing specialists of all levels in compliance with the requirements of the applicable standard and in agreement with the certification body.

Level 3 personnel shall show:

competence in the assessment and interpretation of the results in the framework of the existing sets of regulations, standards, specifications and procedures;

sufficient working knowledge of the materials, technology and manufacturing process to select the method of non-destructive testing and render assistance in setting assessment criteria, where they do not exist; general knowledge of other NDT methods. In view of the above, the following qualification requirements for personnel allowed to perform non-destructive testing of welded joints shall be adhered:

.1 the scope of the Register recognition of the qualification of specialists in ultrasonic testing is, as a rule, limited by the normative documents (standards) used for their special and practical testing during certification;

.2 specialists of at least Level 1 qualification are approved for radiographic testing (without the right to issue conclusions) and of at least Level 2 qualification — for other nondestructive testing methods;

.3 issue of conclusion on the specific non-destructive testing method, check of the equipment operability, as well as drawing up of non-destructive testing charts in accordance with valid normative documents shall be performed by specialists of at least Level 2 qualification;

.4 agreement of non-destructive testing charts, assignment of specific testing methods, procedures and used NDT instructions as well as interpretation of code of practice, standards, specifications and procedures shall be performed by specialists of at least Level 3 qualification.

3.1.3 Testing plan and records.

3.1.3.1 The extent of testing and the number of checkpoints shall be agreed between the shipbuilder and the Register. Unless agreed otherwise, the testing plan for welded joints of hull structures shall be prepared and submitted to the Register for approval. For pipelines, as well as for particular products manufactured under the Register technical supervision, the necessary information may be provided on the relevant drawings without drawing up a separate document. The testing plan shall contain the following information:

.1 details and welded joints subject to testing during the acceptance of welded structures;

.2 scope and methods of testing;

.3 testing locations determined in advance;

.4 requirements for quality assessment of welded joints;

.5 testing standards or written specifications.

3.1.3.2 Upon completion of welding operations on a structure the inspection authority of the manufacturer determines non-destructive testing locations (areas) according to the testing plan approved by the Register. The Register reserves a right to change location of some non-destructive testing areas or enlarge the scope of inspections.

3.1.3.3 It is the shipbuilder's responsibility to assure that testing specifications and procedures are adhered to during the construction and the reports are made available to the Register on the findings made by the NDT. Records on the performed inspections and testing shall be prepared for all types of testing (initial, additional and repeated after repair) and submitted to the Register surveyor together with the reports confirming the results of non-

destructive testing. Conclusion on non-destructive testing results for welding joints shall contain the information specified in 3.2.7 and 3.2.12.

3.1.3.4 Results of repeated testing after repair shall be separated in records. Conclusion on non-destructive testing results shall be signed by a person having performed testing (non-destructive testing operator) and by a person responsible for testing duly authorized by the testing laboratory.

3.1.3.5 Records on the welded joints non-destructive testing results shall be kept at the firm for at least 5 years and be submitted, if necessary, upon the Register request.

3.1.4 Non-destructive testing specification.

Non-destructive testing of welded joints shall be performed in accordance with the approved specifications (procedures) which shall contain at least the following information (if applicable):

.1 applied testing standards;

.2 materials and size;

.3 welding process and type;

.4 reference to the welding procedure specification;

.5 type of joint and size;

.6 main and auxiliary equipment;

.7 conventional sensitivity of testing and tuning methods with indication of applied calibration blocks and/or standard specimens;

.8 necessity and method of sensitivity correction;

.9 specification of parameters of detected defects (discontinuities, wrong size or shape) subject to assessment;

.10 requirements for tuning and calibration of applied equipment;

.11 forms of records issued upon test results;

.12 requirements for personnel qualification in accordance with the international or national standards;

.13 quality assessment criteria for the product acceptance.

3.2 CARRYING-OUT AND BASIC PARAMETERS OF NON-DESTRUCTIVE TESTING OF WELDED JOINTS

3.2.1 Requirements for acceptance non-destructive testing of welded joints.

3.2.1.1 The testing volume shall be the zone which includes the weld and base metal for at least 10mm each side of the weld, or the width of the heat affected zone (HAZ), whichever is greater.

Acceptance non-destructive testing of welded joints shall be carried out (unless otherwise specified) after completion of all welding and straightening work prior to painting or priming, or prior to application of galvanic and other coverings. Areas to be examined shall be free from scale, slag, loose rust, weld spatter, oil, grease, dirt or paint that might affect the sensitivity of the testing method. Preparation and cleaning of welds for subsequent NDT shall be in accordance with the accepted NDT procedures, and shall be to the satisfaction of the surveyor. Surface conditions that prevent proper interpretation may be cause for rejection of the weld area of interest.

NDT shall be conducted after welded joints have cooled to ambient temperature.

For high-tensile steel and high strength steels for welded structure with specified minimum yield stress in the range of 420 N/mm^2 to 690 N/mm^2, acceptance NDT shall not be carried out before 48 h after completion of welding.

For steel with specified minimum yield greater than 690 N/mm^2 NDT shall not be carried out before 72 h after completion of welding.

During welding high strength steels structures, the acceptance testing shall be carried out in two stages: primary and duplicate testing. The primary testing shall be carried out in 48 h or 72 h after the completion of welding works in accordance with the acceptance testing procedure for high strength steels

The duplicate testing shall be performed only on welded joints made at subzero temperatures, approved by the primary testing results, not earlier than 10 days after the primary testing. The scope of the duplicate testing is assigned depending on the Class of the ship's hull structural members in accordance with 1.2.3.7 of Part II "Hull" and shall be 100 % for structural members of Class III, 50 % for structural members of Class II, and 25 % for structural members of Class I.

N o t e s: 1. If a manufacturer can submit documentary evidence of resistance to cold cracking for the applied materials and welding procedure, the time between the completion of welding and start of testing may be reduced for A/F40 or lower grade steels up to 40 mm thick and for A/F500 or higher grade steels up to 20 mm thick.

2. This requirement does not cover operational technical testing performed during manufacture of products in accordance with the requirements of technical regulation (e.g., the layer testing of welded joints by visual testing, testing of welded joints with partially filled groove etc.).

3. For stem structures of icebreakers and ice class ships, at least 72 h shall pass between the completion of welding and start of acceptance testing of welded joints.

4. The duplicate testing of high strength steel welded joints shall be carried out at the manufacturers' producing high strength steel structures for the first time, as well as after eliminating defects in the form of cold cracks.

3.2.1.2 All welded joints shall be initially subjected to visual and measurement testing of 100 % length on both sides of joint (if this is technically feasible) to meet the requirements of 3.2.2. All impermissible defects and deficiencies as per form and size of joint as well as other defects preventing non-destructive testing by other methods shall be eliminated, and locations of repair shall be repeatedly accepted by the welding structures manufacturer's control body. The Register reserves a right to require additional testing areas by relevant methods in those

locations where visual testing visual and measurement testing detected defects indicative of a serious breach of the welding procedure.

3.2.1.3 If welded joints are subjected to heat treatment the final acceptance testing shall be performed upon its completion.

3.2.1.4 A repeated non-destructive testing prior to the welded structures commissioning (handling to the customer) or at their final acceptance may be required if these structures were subjected to loads not provided for normal operation (e.g. during transportation to the place of assembly, proof load testing or testing by pressure exceeding design operating values). Methods and scope of such testing shall be approved by the Register.

3.2.1.5 Impermissible defects detected at any testing stage of welded joints are subject to mandatory repair. A repeated repair of the same area of the welded joint is allowed only when specified in the documentation agreed with the Register. Repair of internal defects on the same weld length is usually not allowed more than twice.

3.2.1.6 If cracks are detected during testing of welded joints the following measures shall be taken:

.1 the whole length of the technologically independent welded joint made by the welder having performed a rejected weld shall be tested. All short welds (less than 1 m) in a block or assembly performed following the similar (to the rejected) welding procedure shall be tested;

.2 welding following the similar welding procedure specification shall be suspended;

.3 reasons for cracking shall be revealed and eliminated and the measures taken for their elimination shall be reported to the Register surveyor. If necessary, the welding procedure specification shall be corrected to be repeatedly submitted for the Register approval;

N o t e s : 1. Technologically independent welded joint is a continuous joint with the same section and edge preparation performed according to the same welding procedure specification in one or continuously changing welding position.

2. Butt welds of flat bulb and T-section steel parts as well as T-joints with full penetration of branches with plating, decks or bulkheads are considered as short welds.

3.2.1.7 If defects other than cracks (refer to 3.2.1.6) are detected during testing of welded joints the following actions shall be taken:

.1 testing shall be continued in areas adjacent to the rejected one from both sides until satisfactory results are gained;

.2 additional testing of two new areas shall be performed according to 3.2.1.8 per one rejected area;

N o t e . This requirement does not cover testing areas adjacent to the rejected one and specified to detect the weld defective area according to 3.2.1.7.1.

.3 four similar welds performed by the same welder following the same welding procedure specification: two antecedent and two consecutive, shall be additionally tested as per short welds;

.4 if results of additional testing according to 3.2.1.7.2 and 3.2.1.7.3 bear witness of the systematic character of impermissible defects, then all technologically independent welded joints or short welds in a block performed by one welder following one welding procedure specification shall be tested along the whole length;

.5 if during initial and additional testing 50 % and more of the technologically independent welded joint length or of the number of similar short welds in a block are tested and it is established that further testing is required, then the whole length of the joint shall be tested or all similar short welds in a block shall be tested.

3.2.1.8 When specifying additional testing areas according to 3.2.1.7.2 the following shall be followed:

.1 for circular butt joints between blocks and assembly butt joints additional testing areas shall be located somewhere in the middle between the areas tested earlier and assessed "fit";

.2 for intrablock welded joints additional testing areas shall be located on joints of which initial radiographic and ultrasonic testing was not carried out;

.3 if during initial testing at least one area was tested on all intrablock joints, additional testing shall be carried out on the welded joint with the defective area;

.4 if an area with intersection of welded joints was tested, additional testing areas shall be located on the weld with impermissible defect.

3.2.1.9 If during additional radiographic or ultrasonic testing the welded joint area quality is assessed "fit", the testing is stopped. If the additional testing area quality is assessed "unfit", the testing shall be continued according to 3.2.1.7 until satisfactory results are gained.

3.2.1.10 The following shall be observed during testing of welded joints after repair of impermissible defects:

.1 testing after repair of the whole technologically independent joint rejected upon the results of radiographic or ultrasonic testing shall be carried out in full scope by all testing methods provided by technical documentation for the acceptance testing of this joint;

.2 testing of separate areas of the welded joint rejected upon the results of radiographic or ultrasonic testing shall be performed after repair along the whole length by the same methods which were used for detection of repaired defects;

.3 quality assessment and acceptance of repaired welded joints shall be carried out following the same criteria as during the initial testing;

.4 if no impermissible defects are detected in the welded joint after repair, it is assessed "fit";

.5 if defects are detected in the welded joint after repair — refer to 3.2.1.5.

3.2.1.11 When shell plating welds are tested, the radiograph shall be located at the intersection of the weld axes so as to partially cover also the seam as shown in Fig. 3.2.1.11-1. In ultrasonic testing areas wider than 100 mm shall be tested on each side of the butt as shown in Fig. 3.2.1.11-2.

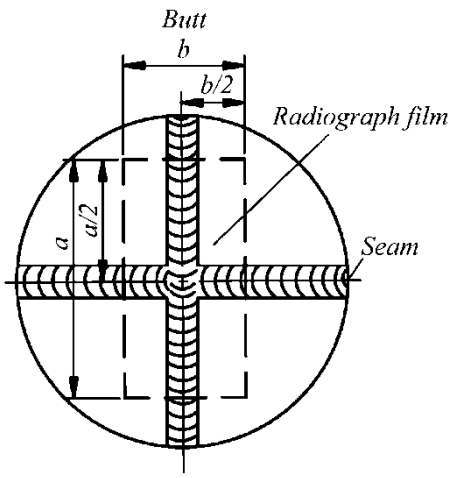

Fig. 3.2.1.11-1:
a — length of radiograph equal to ≈ 500 mm;
b — width of radiograph equal to ≈ 100 mm

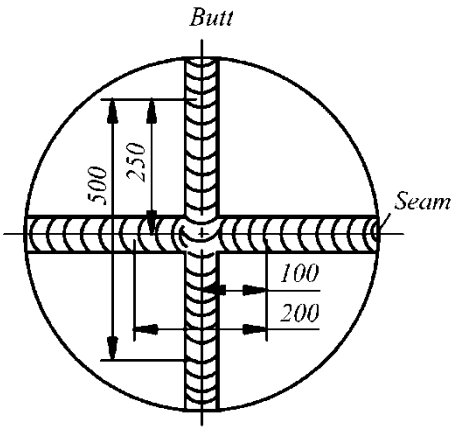

Fig. 3.2.1.11-2

3.2.2 Visual and measurement testing of welded joints.

3.2.2.1 Visual and measuring testing of welded joints shall be carried out in compliance with the requirements of ISO 17637-2003, ISO 6520-1:2007 or other agreed international and national standards.

3.2.2.2 Visual testing of welded joints shall be performed to reveal the weld surfaced imperfections and affected zone including (marking as per ISO 6520):

cracks (100, 104);

undercuts (5011, 5012, 5013);

unfilled craters, sags, runs, unfilled bevel (2025, 506, 509, 511);

surfaced blowholes (2016);

lacks of fusion in the root of a single-sided weld, concave deformation-shrinkage grooves in theweld root as well as excessive penetration-sagging in the weld root (4021, 515, 504);

surfaced pores and poor fusion (2017, 401);

root porosity (516);

arc burns — stains of short circuits (601);

wrong weld section modulus — non-smoothness of conjuction with the base metal (505);

exceeding weld reinforcement (502, 503);

pimpling and scaling (514);

melted metal spatter (602);

correctness of the seal welding of crossing welds and free edges.

3.2.2.3 Visual testing of welded joints and affected zone shall be performed along the entire weld length on both sides accessible for examination (testing) before they can become inaccessible during further structure assembly except for absence of access to the weld reverse side in one-side welded joints.

3.2.2.4 Prior to visual testing weld and affected zone surface shall be cleaned from metal spatter, slag, soot and other and kept clear of protective coatings.

3.2.2.5 Visual testing shall be usually carried out without use of special optical instruments. Magnifying glasses with not more than 10X magnification may be used.

The illumination of the surface under control shall be at least 350 lux with the advised (recommended) value of 500 lux. To perform visual and measurement examination an access to the controlled welded joint shall be provided at a distance of about 600 mm at the angle (angle) of examinationof at least 300 (Fig. 3.2.2.5). In case when for the places which are not easily accesible the accessibility of the item under control (tested surface) in compliance with 3.2.2.5 can not be implemented, it is necessary to use mirrors, borescopes, flexible fiber optic cables or video cameras.

To increase the contrast between the imperfections and the background additional sources of illumination can be used.

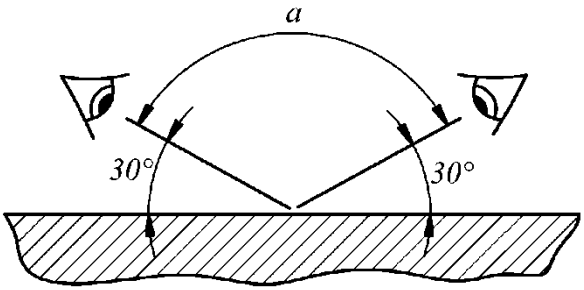

Fig. 3.2.2.5
Access conditions to check surface at visual and measurement testing

3.2.2.6 Where the results of visual examination are inconclusive, for example, where serious doubts exist that cracks exist, one of the following methods shall be additionally used to detect surfaced imperfections:

magnetic particle method of testing;

penetrant method of testing;

grinding with abrasive tool with subsequent etching by reagent used for detecting macrostructure.

3.2.2.7 Measurement testing of welded joints shall be carried out to check (marking as per ISO 6520-1:2007):

toe weld (505);

weld reinforcement (502, 503);

leg length of a fillet weld (5213, 5214);

fillet weld asymmetry (512);

height and extension of undercuts (5011, 5012, 5013);

pimpling and scaling heights as well as values of sinking between the weld beads (514);

diameter of surface pores (2017);

lacks of fusion and concave deformation (shrinkage) depths in the root of one-sided weld (4021, 515);

exceeding penetration heights (504);

depths and extensions of metal leaks as well as sizes of unfillings of the edges groove (509, 511);

sagging values if required (506);

linear deflection values (507);

length and pitch of interrupted (non-continuous) weld.

Measurement testing is applied to check the geometric dimensions of the prepared for welding joints, including assembly clearances, mismatch welded edges peaks, shapes and dimensions of the edge preparation.

3.2.2.8 The measurement testing of the welds shall be carried out after visual examination or simultaneously with it. Measurement of welds shall be made not less than every meter connection, but there shall be at least one measurement at each of technologically independent connections (refer to Note 1 to 3.2.1.6). At that the measurements of welded joints shall be first carried out at points where deviations from specified dimensions are suspected after a visual testing. Measuring the dimensions of connections with an intermittent weld shall be made on a sampling basis.

3.2.2.9 To perform measurement testing of welded joints there shall be applied measuring tools relevant to the Guidelines of Annex A to ISO 17637.

3.2.3 Welded joints penetrant testing.

3.2.3.1 Penetrant testing including dye penetrant testing, fluorescent penetrant testing and fluorescent-dye penetrant testing (PT) of welded joints shall be applied and carried out in accordance with written specifications (procedures) developed on the basis of ISO 3452 (Parts 1 — 6) or other agreed international and national standards.

3.2.3.2 Specifications for performing penetrant testing shall contain at least the following details and requirements:

minimum testing sensitivity and applicable control (reference) specimens (calibration equipment);

requirements for the prepreparation of the surface tested;

degreasing and backing of the surface tested prior to the penetrant application;

instructions on the details of the method application according to the temperature-controlled surface or restrictions on the temperature range for particular developers;

type of indicator penetrant;

applicable purifier and developer;

coating and removal of indicator penetrant;

drying time (conditioning before removal) of indicator penetrant;

developer application and the development time;

illumination conditions for testing.

3.2.3.3 The tested surface shall be cleaned and clear of scale, rust, slag, dirt, oil and grease contamination, paint (indications). Surface preparation shall include a weld and base metal at a distance at least 10 mm on either side of the seam borders or, as an alternative, the entire width of the HAZ, whichever is greater.

3.2.3.4 The temperature of parts examined shall be typically between 5 °C and 50 °C, outside this temperature range special low/high temperature penetrant and reference comparator blocks shall be used.

3.2.3.5 Exposure time of indicator penetrant on the testing surface shall meet the specifications of a manufacturer and/or the applicable standards and be, as a rule, at least 10 min. Development time shall comply with the manufacturer's specifications and/or the applicable standards and be, as a rule, 10 to 30 min, but at least 10 min.

3.2.3.6 Record of the testing results may be performed by any of the methods or a combination thereof:

description in writing;

sketches;

photography;

video recording.

3.2.4 Magnetic particle testing of welded joints.

3.2.4.1 Magnetic particle testing of welded joints shall be applied and carried out in accordance with written specifications (procedures) developed on the basis of ISO 17638 or other agreed international and national standards.

3.2.4.2 Specifications for performing magnetic particle testing shall contain at least the following details and requirements:

requirements for the prepreparation of the surface tested;

magnetizing equipment;

sensitivity tuning method;

measuring equipment and its application;

surface conditions;

requirements and methods of demagnetization of the product after completion of the test.

3.2.4.3 The tested surface shall be cleaned and free from scale, rust, slag, dirt, oil and grease contamination, paint (indications). Furthermore, the weld surface shall be free from abrupt sinking between beads and scales as well as inadmissible undercut dimensions.

3.2.4.4 When the circular current magnetization flow through the product, care shall be taken to prevent burns from current electrodes. At the same time, it is not allowed to use copper shoes (lugs) of electrical connections. Metal lugs with a low fusion point (of lead or zinc) are recommended to be used as practicable since in this case the temperature in the contact zone is not above the the metal electrical connection fusion point. It is also advised to apply shims of lead or aluminium-copper grid.

3.2.4.5 To ensure detection of imperfections of any orientation the welds shall be magnetized in about two mutually perpendicular directions with tolerances of at least 30°. For lap joints testing of the whole surface shall be provided.

3.2.4.6 The magnetic suspension shall be applied in any manner ensuring free movement of magnetic particles on the tested surface (under testing): dry spraying, spray arc or suspension jet watering, immersion in a suspension bath. In this case a method of applying a continuous layer of wet suspension shall be used as practicable.

3.2.4.7 Examination of the tested surface shall be carried out immediately after processing it with magnetic suspension. At the control method of applied field the examination is also carried out during processing the product with magnetic suspension.

3.2.5 Radiographic testing of the welded joints.

3.2.5.1 Radiographic testing of welded joints shall be applied and carried out in accordance with written specifications (procedures) developed on the basis of ISO 17636-1:2013 or other agreed international and national standards.

The inside and outside surfaces of the welds to be radiographed shall be sufficiently free from irregularities that may mask or interfere with interpretation. Surface conditions that prevent proper interpretation of radiographs may be cause for rejection of the weld area of interest.

3.2.5.2 Specifications for performing radiographic testing shall contain at least the following details and requirements:

material of the tested product;

type of radiation source and the maximum size of the focal spot of the radiation source;

the X-ray tube voltage during X-ray examination;

X-rayed control areas penetrated radiation thickness (total thickness of the base and weld metal in the direction of the central ray of the radiation beam);

X-ray and control schemes (location and numbers of controlled areas);

the overlap of radiograph s with continuous control;

type and location of the sensitivity standards;

class and testing sensitivity;

type (Class) of radiographic film and intensifying screens feature if required;

length and width of the radiographic films;

specifications for the terms of exposure;

requirements for processing radiographic films;

requirements for the optical density of exposures and conditions of their viewing (maximum brightness of the X-ray viewer illuminated field).

3.2.5.3 X-ray schemes of welded joints shall comply with international or national standards. X-ray directions in these schemes shall be as such as during X-ray examination the maximum amount of the weld deposited metal is controlled (monitored) at a minimum radiation thickness of the welded joint controlled metal. Thus, where practicable X-ray examination is carried out the next but one wall.

3.2.5.4 Labelling of radiograph shots shall enable to identify where applicable: the hull number (order), section number located on the outer shell plate (starboard/portside), location (or order number of a radiograph) and the control date.

3.2.5.5 The radiation sources for radiographic inspection of welded joints, X-ray devices shall be used as well as radioactive isotopes as follows: ytterbium-169, thulium-170, selenium-75, iridium-192, cobalt-60, electron accelerators with the energy of accelerated electrons up to 12 MeV. At the same time, where possible, X-ray source shall be given priority in relation to

sources of gamma radiation. Details on the application of radiation sources in accordance with ISO 17636 are given in Tables 3.2.5.5-1, 3.2.5.5-2 and in Fig. 3.2.5.5.

Table 3.2.5.5-1

Penetrated thickness range for gamma ray sources for steel, copper and nickel base alloys

Radiation source	Penetrated thickness *w*, mm	
	Test class A	Test class B
Tm-170	$w \le 5$	$w \le 5$
Yb-169[1]	$1 \le w \le 15$	$2 \le w \le 12$
Se-75[2]	$10 \le w \le 40$	$14 \le w \le 40$
Ir-192	$20 \le w \le 100$	$20 \le w \le 90$
Co-60	$40 \le w \le 200$	$60 \le w \le 150$
1 For aluminium and titanium, the penetrated material thickness is 10 mm < *w* < 70 mm for control Class A and 25 mm < *w* < 55 for control Class B. 2 For aluminium and titanium, the penetrated material thickness is 35 mm < *w* < 120 mm for Class A.		

Table 3.2.5.5-2

Penetrated thickness range for X-ray equipment with energy 1 MeV and above for steel, copper and nickel base alloys

X-ray equipment with energy	Penetrated thickness *w*, mm	
	Test class A	Test class B
From 1 MeV to 4 MeV	$30 \le w \le 200$	$50 \le w \le 180$
From 4 MeV to 12 MeV	$w \ge 50$	$w \ge 80$
above 12 MeV	$w \ge 80$	$w \ge 100$

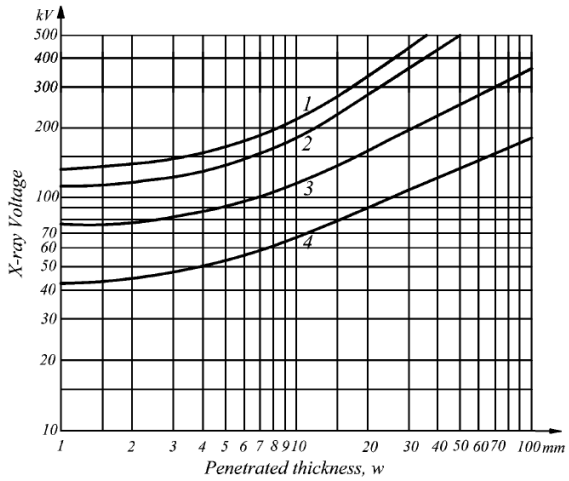

Fig. 3.2.5.5

The maximum X-ray device tube voltage values depending on the penetrated thickness of the controlled metal:
1 — copper/nickel and alloys; *2* — steel; *3* — titanium and alloys; *4* — aluminium and alloys

3.2.5.6 The sensitivity of radiographic testing shall be determined by the image on the welded joint radiograph indicator of image quality indicator in compliance with international or national standards (ISO 19232-1, 19232-2, EN 462 and similar). It is admitted to apply indicator of image quality of wire or step/hole type as well.

As a rule, indicator of image quality (the sensitivity standard) shall be installed on a tested welded joint in the centre of an X-rayed area on the radiation source side (end). By way of exception, the installation of indicator of image quality on the film side shall be applied in the following cases:

during X-ray examination of piping welded joints at the next but two walls using an image of only the adjacent to the film seam area for the joint quality assessment;

during panoramic X-ray examination of piping welded joints.

3.2.5.7 The requirements to minimum sensitivity of radiographic inspection in compliance with ISO 17636 or EN 1435 shall comply with Class A or B (examination level) depending on the requirements for the quality of welded joints and they are specified as per ISO 10675-1, Table 3.4.1.4.

The control sensitivity values complying with Classes A and B according to ISO 17636 or EN 1405 for wire-type indicator of image quality are shown in Tables 3.2.5.7-1 — 3.2.5.7-3.

Table 3.2.5.7-1

The minimum sensitivity of radiographic inspection for flat components and during X-ray of piping welded joints at the next but one wall (indicator of image quality from the radiation source side) for X-ray devices and electron accelerators[1]

Test sensitivity, mm	Penetrated thickness w, mm	
	Test class A	Test class B
0,050	–	$0 < w \le 1,5$
0,063	$0 < w \le 1,2$	$1,5 < w \le 2,5$
0,080	$1,2 < w \le 2$	$2,5 < w \le 4$
0,100	$2 < w \le 3,5$	$4 < w \le 6$
0,125	$3,5 < w \le 5$	$6 < w \le 8$
0,16	$5 < w \le 7$	$8 < w \le 12$
0,20	$7 < w \le 10$	$12 < w \le 20$
0,25	$10 < w \le 15$	$20 < w \le 30$
0,32	$15 < w \le 25$	$30 < w \le 35$
0,40	$25 < w \le 32$	$35 < w \le 45$
0,50	$32 < w \le 40$	$45 < w \le 65$
0,63	$40 < w \le 55$	$65 < w \le 120$
0,80	$55 < w \le 85$	$120 < w \le 200$
1,0	$85 < w \le 150$	$200 < w \le 350$
1,25	$150 < w \le 250$	$350 < w$
1,60	$250 < w$	–

[1] During X-ray of welded joints by gamma radiation (Iridium-192) the values given in Table shall be lowered down (decreased) (reduce sensitivity):
Class A control:
two steps lower for thicknesses over 10 up to 24 mm inclusive;
two steps lower for thicknesses over 24 up to 30 mm inclusive;
Class B control:
a step lower for thicknesses over 12 up to 40 mm inclusive.

Table 3.2.5.7-2

The minimum sensitivity of radiographic inspection during X-ray of piping welded joints at the next but two walls (indicator of image quality from the radiation source side) during panoramic X-ray examination of piping welded joints for X-ray devices and electron accelerators (indicator of image quality on the film side)[1]

Testing sensitivity, mm	Penetrated thickness *w*, mm	
	Test class A	Test class B
0,050	–	$0 < w \le 1,5$
0,063	$0 < w \le 1,2$	$1,5 < w \le 2,5$
0,080	$1,2 < w \le 2$	$2,5 < w \le 4$
0.100	$2 < w \le 3,5$	$4<w \le 6$
0,125	$3,5 < w \le 5$	$6 < w \le 8$
0,16	$5< w \le 7$	$8< w \le 15$
0,20	$7 < w \le 12$	$15 < w \le 25$
0,25	$12 < w \le 18$	$25 < w \le 38$
0,32	$18 < w \le 30$	$38 < w \le 45$
0,40	$30 < w \le 40$	$45 < w \le 55$

Testing sensitivity, mm	Penetrated thickness *w*, mm	
	Test class A	Test class B
0,50	40 < *w* ≤ 50	55 < *w* ≤ 70
0,63	50 < *w* ≤ 60	70 < *w* ≤ 100
0,80	60 < *w* ≤ 85	100 < *w* ≤ 170
1,0	85 < *w* ≤ 120	170 < *w* ≤ 250
1,25	120 < *w* ≤ 220	250 < *w*
1,60	220 < *w* ≤ 380	–
2,00	380 < *w*	–
[1] Refer to Footnote to Table 3.2.5.7-1.		

Table 3.2.5.7-3

The minimum sensitivity of radiographic inspection during X-ray of piping welded joints at the next but two walls (indicator of image quality on the film side) for X-ray devices and electron accelerators[1]

Testing sensitivity, mm	Penetrated thickness w, mm	
	Test class A	Test class B
0,050	–	0 < *w* ≤ 1,5
0,063	0 < *w* ≤ 1,2	1,5 < *w* ≤ 2,5
0,080	1,2 < *w* ≤ 2	2,5 < *w* ≤ 4
0,100	2 < *w* ≤ 3,5	4<*w* ≤ 6
0,125	3,5 < *w* ≤ 5	6< *w* ≤ 12
0,16	5 < *w* ≤ 10	12 < *w* ≤ 18
0,20	10 < *w* ≤ 15	18 < *w* ≤ 30
0,25	15 < *w* ≤ 22	30 < *w* ≤ 45
0,32	22 < *w* ≤ 38	45 < *w* ≤ 55
0,40	38 < *w* ≤ 48	55 < *w* ≤ 70
0,50	48 < *w* ≤ 60	70 < *w* ≤ 100
0,63	60 < *w* ≤ 85	100 < *w* ≤ 180
0,80	85 < *w* ≤ 125	180 < *w* ≤ 300
1,0	125 < *w* ≤ 225	300 < *w*
1,25	225 < *w* ≤ 375	–
1,60	375 < *w*	–
[1] Refer to Footnote to Table 3.2.5.7-1.		

3.2.5.8 Geometric unsharpness of imperfections of images in radiographs shall not exceed one half of the minimum testing sensitivity according to 3.2.5.7.

3.2.5.9 Length of X-rayed flat cells weld areas per an exposure and the number of exposures(areas) during X-ray of piping welded joints shall be such that the ratio of radiation thickness of X-rayed metal at the inspected areas edges and centre shall not exceed 1,2 under Class A control and 1,1 under Class B control. In this case the optical density values at the radiograph edges and in the centre shall not go beyond the limits of 3.2.5.11.

3.2.5.10 Types of radiographic films and relevant intensifying screens shall comply with the applicable international or national standards (ISO 17636, EN 1435 and the similar standards).

3.2.5.11 The optical density of radiographs shall be at least 2.0 at Class A control and at least 2.3 at Class B control. The maximum value of the Image optical density is determined by the characteristics of the applied X-ray viewers and it is 4,0 for the relevant X-ray viewers of 3.2.5.12.

3.2.5.12 To interpret the welded joints radiographs X-ray viewers shall be used with adjustable size and brightness of the illuminated field in accordance with international standards, such as ISO 5580.

3.2.5.13 Radiographic testing of the welded joints with the use of digital detectors (digital radiography RT-D).

3.2.5.13.1 Radiographic testing of welded joints with the use of digital detectors (digital radiography RT-D) shall be applied and carried out in accordance with written specifications (procedures) developed on the basis of ISO 17636-1:2013 or other agreed international and national standards.

3.2.5.13.2 The radiographic testing of the welded joints with the use of digital detectors (digital radiography RT-D) may be used for the rolled sheets and plates and pipes for detection of the defects with computed radiography (CR) or radiography with the use of digital detector array (DDA).

Computed radiography (CR) is a system with a phosphor imaging plate (IP). The complete system comprises a phosphor imaging plate (IP) and a respective reading device (scanner or reader), which converts information from the IP into a digital image.

Digital detector array (DDA) system is a system comprising an electronic device converting the ionization or penetrating radiation into a set of separate analogue signals, which are later digitized and sent to the computer to be displayed as a digital image corresponding to distribution of the radiant energy transmitted to the device's receiving surface. The digital detectors provide a digital grey scale image with a grey value (GV), which can be decoded and assessed with a computer.

Grey value (GV) is a numeric value of pixel on the digital image.

3.2.5.13.3 The requirements for minimum sensitivity of the radiographic testing with the use of digital detectors corresponding to classes A and B shall be equivalent to those given in Tables 3.2.5.7-1, 3.2.5.7-2 and 3.2.5.7-3 for IR of wire type for the film radiography.

3.2.5.13.4 Specification (procedure) of the radiographic testing of the welded joints with the use of digital detectors (digital radiography RT-D) shall be written and include at least the information given in Table 3.2.5.13.4.

3.2.5.13.5 Regarding choice of testing level for digital radiography (RT-D) per ISO 17636-2:2013 this is referred to in Section 8.4.

Table 3.2.5.13.4

Requirements for digital radiography procedure

Requirement
material types or weld configurations to be examined, including thickness dimensions and material product form (castings, forgings, pipe, plate, etc.)
Digitizing system description:
manufacturer and model No. of digitizing system
physical size of the usable area of the image monitor
film size capacity of the scanning device
spot size(s) of the film scanning system
image display pixel size as defined by the vertical/horizontal resolution limit of the monitor
illuminance of the video display
data storage medium
Digitizing Technique:
digitizer spot size (in microns) to be used
loss-less data compression technique, if used
method of image capture verification
image processing operations
time period for system verification
Spatial resolution used:
contrast sensitivity (density range obtained)
dynamic range used
spatial linearity of the system
material type and thickness range
source type or maximum X-ray voltage used
detector type
detector calibration
minimum source-to-object distance
distance between the test object and the detector
source size
test object scan plan (if applicable)
image quality measurement tools
image Quality Indicator (IQI)
wire image quality indicator
duplex image quality indicator
image identification indicator
testing levels, acceptance levels and/or recording levels
personnel qualification requirements
surface condition
records, including minimum calibration data to be recorded
environmental and safety issues

3.2.6 Ultrasonic testing of welded joints.

3.2.6.1 Ultrasonic testing of welded joints shall be applied and carried out in accordance with written specifications (procedures) developed on the basis of ISO 17640 or other agreed international and national standards.

3.2.6.2 Ultrasonic testing of welded joints is carried out on the surface after rolling, shot-blasting or machining. The surface shall be free of dents and irregularities, metal spatter, soot, scale disbondment, rust and paint shall be removed from it.

Surface waviness shall provide a gap between the surface of scanning and contact surface of converters and transformers of at least 0,5 mm. If necessary, an additional surface machining shall be performed to meet this requirement. Local surfaced imperfections causing a gap increase below the contact surface up to 1 mm may be permitted only if additional scanning of this area/section is provided by the converter at a different entry angle.

3.2.6.3 Sizes of areas into which a welded joint is divided under control, and their marking-out shall comply with those accepted for radiographic control if possible.

Circumferential welded joints of pipes are divided into areas by analogy with the clock dial customizing if possible to the working environment progress direction.

3.2.6.4 Deposited weld metal, merging zone and heat affected zone shall be subject to ultrasonic testing. The base metal layer of width at least 10 mm, adjacent to the heat affected zone, shall be included in the controlled area and evaluated according to the criteria specified for the joint.

3.2.6.5 Specification for carrying out ultrasonic testing shall contain the following information and requirements at a minimum:

identification particulars on a controlled product: the hull number (order), section number located on the outer shell plate (starboard/portside), location (or order numbers of areas under control, drawings, etc.);

types (marks) of base material and welding consumables;

type of a welding consumable (rolled products, forgings, castings, etc.);

welding process;

product manufacturing stage in which control is performed (either before or after heat treatment, fully or partly welded seam) including the required heating time after the preceding control operation;

drawing of a controlled welded joint indicating edge preparations of the joint thickness, available weld reinforcement and its width, geometrical shape of input surface and roughness requirements;

level of control including sonic scheme showing scanning areas for each of the passageways, input PEC angles as well as the requirements for the identification of longitudinal and transverse imperfections, with reference to the relevant normative and technical document (standards, rules);

type of a used non-destructive testing (NDT) instrument and converters (including frequency, angle of entry, the size and shape of the piezoelectric element);

method for setting the sensitivity reference level indicating the used standard samples (or the manufacturer's (firm's) standard samples);

controlled and reported sensitivity levels as well as the requirements to an acceptable level of assessment of the imperfections identified with reference to the applicable standard, and, if necessary, additional requirements;

necessity and a way of adjusting the sensitivity taking into account the input surface state of ultrasonic oscillations;

the personnel's qualifications as per national or international standards.

3.2.6.6 To carry out ultrasonic testing the following shall be applied:

ultrasonic flaw pulse detectors of general purpose with piezoelectric transducers (probes) complying with the requirements of international and national standards (e.g., EN 12668 — all parts) included in the State Register of Measuring Equipment (for the Russian Federation) and with technical characteristics as per the requirements of these rules and specifications to carry out monitoring of specific objects;

PEC straight dual, straight single-dual, inclined dual and single-dual search units providing a frequency range of at least 2 to 6 MHz;

national or international standard specimens (gauge blocks) to check the basic control characteristics and settings of working modes of non-destructive testing (NDT) instruments (e.g., specimens of K-1 and K-2 of the International Institute of Welding for ISO 2400; specimens of CO-2, CO-3 according to GOST 14782);

standard samples of the firm (gauge blocks) to set the reference sensitivity level of control that meet the requirements of the applicable standards;

devices for control of the mirror-like echo method as per schemes "straddle" and "tandem";

devices for stabilizing the acoustic coupling (bearings, nozzles) under the control by curved surfaces;

auxiliary arrangements and devices for evaluating the surface roughness and waviness, compliance with scanning parameters and measurement of parameters of the imperfections revealed;

DAC (distance-amplitude-curve) or DGS (distance gain size) of a diagram or scale;

specialized non-standard probes;

means of providing ultrasonic contact in accordance with the requirements of the applicable standards (e.g., EN 583-1).

3.2.6.7 Inclined PEC operating on transverse waves shall provide input angles from 35° till 75° (as a rule, 45°, 60° and 70°). In the case where the sonic scheme involves the use of PECs with two or more entry/input angles, the difference between the nominal input angles shall be at least 10°.

Admission to the angle shall be at least ±2°.

3.2.6.8 Each converter shall have an identification number, files or other document, which shall also state its type, frequency, angle of entry (into steel), form and geometrical dimensions of piezoelectric elements.

3.2.6.9 When monitoring cylindrical and spherical surfaces, the gap between the scanning surface and the contact surface of PEC shall not exceed 0,5 mm. This requirement is usually performed provided that $D \geq 15b$, where D is a diameter of the product in mm, b — a linear size of PEC contact surface in the control plane. If this requirement is not complied with, adaptation of the PEC contact surface is required to the product shape or ointment or application of coupling gaskets or supports fixing its position.

3.2.6.10 Equipment for ultrasonic testing shall provide the gain control setting (playing of standard level of sensitivity control) upon increment (maximum pitch) of at least 2 dB within the scope of at least 60 dB.

3.2.6.11 Prior to ultrasonic testing the basic parameters shall be checked out which affect its results. The check shall include the identification of:

the angle of an ultrasonic beam entering into the metal;

position of the exit point of the beam and inclined PEC boom;

dead area;

resolution capability on the beam;

deviation of the acoustic axis of straight and inclined PEC off the nominal direction.

Checks are carried out according to a firm's written procedure performing control.

3.2.6.12 In the case when estimation is performed in compliance with the admissible assessment levels of the revealed imperfections based on the length and amplitude of the echo signal, such as ISO 11666, EN 1714 for initial testing the frequency shall be selected if possible closer to the lower limit within the recommended range of 2 to 6 MHz. Higher speed values closer to the upper limit of the recommended range, can be used to improve the control resolution capability range in the case it is necessary to assess the readings for compliance with the acceptable levels based on the characteristics of imperfections, such as ISO 23279, EN 1713.

Frequencies within 1 MHz may be used for testing products with a longer sound channel where the signal attenuation level by the material is above average.

3.2.6.13 In accordance with the standards ISO 17640 and ISO 11666 during ultrasonic testing the following four levels of sensitivity and assessment of results are applied:

r e f e r e n c e l e v e l is a sensitivity level used to set the initial level of the reference echo amplitudes; evaluation level is a sensitivity level according to which or while exceeding it the assessment of the revealed imperfections shall be carried out (refer to Table 3.4.6.1);

r e c o r d i n g l e v e l is a sensitivity level defined as complying with the admissible level of assessment minus 4 dB;

acceptance level is a level of assessment of the identified imperfections in compliance with the requirements for acceptance of products (refer to Table 3.4.6.1).

3.2.6.14 In accordance with ISO 17640 for setting the reference level of ultrasonic testing sensitivity one of the methods listed may be used:

method 1 — reference level is a DAC (distance-amplitude curve) chart drawn up using standard specimens of the firm with the side drilled hole of 3 mm diameter (refer to Table 3.2.6.14-1);

Table 3.2.6.14-1

The requirement to the size of the firm's standard specimens (gauge blocks) to draw u DAC charts

The material thickness to be inspected, mm	Standard specimen thickness, mm	Hole diameter, mm	Distance from the hole to one of the surfaces, mm
10 < *t* ≤ 50	40 or *t*	Ø3±0,2	*t*/2 and *t*/4 Additional holes are permitted and recommended.
50 < *t* ≤ 100	75 or *t*		
100 < *t* ≤ 150	125 or *t*	Ø6±0,2	
150 < *t* ≤ 200	175 or *t*		
200 < *t* ≤ 250	225 or *t*		
t > 250	275 or *t*		

Notes: 1. The calibration (gauge) block (arrangement) shall be made of actually tested material, it shall have approved dimensions and be checked in accordance with the established procedure.
2. In the case ultrasonic testing is used to control rolled steel structures as delivered CR (controlled rolling) or TM (thermo-mechanical rolling), relevant gauge blocks (arrangements) shall be made perpendicular and parallel to the rolling direction. Rolling direction shall be clearly identified both on the gauge blocks and on a controlled product (item).
3. The use of reference materials for the control of large thicknesses with a side hole diameter of 6 mm is recommended as it is not regulated by ISO 17640 and EN 1712.

method 2 — to set the reference level for the longitudinal and transverse waves DGS (distance gain size) charts or scales are used built using standard specimens with flatbottom DSR — disc shaped reflectors. Reference levels of sensitivity in accordance with ISO 17640 for inclined and straight PEC are shown in Table 3.2.6.14-2 and 3.2.6.14-3.

Table 3.2.6.14-2

Reference levels for acceptance levels 2 and 3 for technique 2 using angle beam scanning with transverse waves (method 2 of ISO 17640)

Nominal probe frequency, MHz	Thickness of parent metal, mm					
	8 ≤ *t* < 15		15 ≤ *t* < 40		40 ≤ *t* < 100	
	AL 2	AL 3	AL 2	AL 3	AL 2	AL 3
1,5 — 2,5	–	–	D_{DSR} = 2,5 mm	D_{DSR} = 2,5 mm	D_{DSR} = 3,0 mm	D_{DSR} = 3,0 mm
3 — 5	D_{DSR} = 1,5 mm	D_{DSR} = 1,5 mm	D_{DSR} = 2,0 mm	D_{DSR} = 2,0 mm	D_{DSR} = 3,0 mm	D_{DSR} = 3,0 mm

D_{DSR} is the diameter of a flat-bottomed DSR — disc shaped reflector.
AL 2, AL 3 are admissible imperfections acceptance levels according to ISO 11666.

Table 3.2.6.14-3

Reference levels for acceptance levels 2 and 3 for technique 2 using straight beam scanning with longitudinal waves (method 2 of ISO 17640)

Nominal frequency of PEC signal, MHz	Thickness of tested metal, mm					
	8 ≤ *t* < 15		15 ≤ *t* < 40		40 ≤ *t* < 100	
	AL 2	AL 3	AL 2	AL 3	AL 2	AL 3
1,5 to 2,5	–	–	D_{DSR} = 2,5 mm	D_{DSR} = 2,5 mm	D_{DSR} = 3,0 mm	D_{DSR} = 3,0 mm
3 to 5	D_{DSR} = 2,0 mm	D_{DSR} = 2,0 mm	D_{DSR} = 2,0 mm	D_{DSR} = 2,0 mm	D_{DSR} = 3,0 mm	D_{DSR} = 3,0 mm

D_{DSR} is a diameter of a flat-bottomed DSR — disc shaped reflector.
AL 2, AL 3 are admissible imperfections acceptance levels according to ISO 11666.

method 3 — for the reference level DAC chart is taken drawn up with the use of the firm's reference materials (standard specimens) with a rectangular notch 1 mm in width and 1 mm in

depth. This method of sensitivity settings can be used for inclined PEC with an input angle of over 70° and a range of thicknesses of 8 mm ≤ *t* <15 mm;

method 4 — using sonic testing schemes "tandem" as a reference level signal is received from the flat- bottomed hole with a diameter of 6 mm (for all thicknesses) perpendicular to the surface scanned. This method only applies to the loop input angle of 45° and thickness *t* ≥ 15 mm.

3.2.6.15 Weld test scheme on the quantity of scanning directions and scan camera angles applied (PEC inclined input angle) shall comply with the applicable international or national standards, such as ISO 17640 or EN 1712. Thus, for welds of increased and high steel strength irrespective of applicable acceptable level, as well as for an applicable acceptable level "B" as per ISO 5217 (procedure and testing level is not lower than "B" ISO 17640, ISO 11666 acceptance level 2, refer to Table 3.4.1.4) it is obligatory to perform sounding (scanning) to detect transverse imperfections (T-scan).

N o t e . If the manufacturer is able to provide documentary evidence of indisposition for cracking of the applied materials used and welding process, scanning can not be implemented for high strength steels of categories A/F 40 and lower in thicknesses up to 40 mm inclusive to detect transverse imperfections (T-scan) at the control level on acceptance level 3 ISO 11666.

3.2.6.16 At the sensitivity setting possible difference in roughness and waviness of a specimen surface used to set the sensitivity, and the weld surface of a controlled weld in the scanning area shall be taken into account. The necessity and method of adjusting the sensitivity shall be specified in a written procedure of a testing firm, and the actual correction value — in an appropriate specification of inspection in accordance with the instructions set out below.

If the difference in sensitivity between the firm's standard specimen and the testing surface is less than 2 dB, sensitivity correction is not required.

If the difference in sensitivity between the firm's standard specimen and the testing surface is over 2 dB, but less than 12 dB, it shall be appropriately balanced.

If the difference in sensitivity between the firm's standard specimen and the testing surface is over 12 dB, the cause shall be found out and measures for further preparation of a scanned surface shall be taken if possible.

When the obvious reasons for high differences in sensitivity are not seen, degradation of a signal shall be measured from different places of a test item, and if it is found to be very significant, the appropriate corrective actions shall be considered.

Methods to correct sensitivity shall comply with the relevant standards (e.g., EN 583-2).

3.2.6.17 When testing circumferential piping welded joints by a single reflected beam adjustable for planeparallel specimens or reference signals received with a direct ray as well as at the direct PEC control the loss of signal amplitude shall be considered on the inner cylindrical surface of the weld HAZ. Method of correction reference shall be specified in a written procedure of a testing firm, and the actual correction value — in an appropriate specification of inspection.

3.2.6.18 Before ultrasonic testing of the weld straight PEC control of base metal shall be made across the width of the scanning surface for detection and reporting of imperfections that may affect the ability to control the weld by the inclined PEC. As a result of control of the base metal, if required, specifications to perform ultrasonic testing shall be corrected and with the technical inability to control weld run in full — alternative methods of non-destructive testing (e.g., radiographic) are provided that shall be noted in the test report.

N o t e . The requirement to monitor the continuity of the base metal can also be confirmed by previous examinations (for example, during the production and control of the base metal).

3.2.6.19 The sensitivity of the PEC flaw detector shall be checked prior to the start of monitoring, after work breaks and completing testing, and periodically every 60 minutes during testing in accordance with the instructions set out below:

If the sensitivity is not changed for more than 4 dB, prior to continuation of testing equipment settingup shall be adjusted.

If the sensitivity is reduced by more than 4 dB, the setting shall be corrected, and the control of welded joints made since the last adjustment correction shall be carried out completely again.

If the sensitivity is increased by more than 4 dB, the setting shall be adjusted, and all the detected and assessed "unfit" imperfections shall be monitored and reassessed.

3.2.6.20 Ultrasonic testing method. Automated ultrasonic examination using Phased array Ultrasonic Testing (PAUT).

3.2.6.20.1 Phased Array Ultrasonic Testing (PAUT) is used for metal welded joints made by fusion welding with the minimum thickness of 6 mm.

Depending on automation degree, there are automated (AUT) and semi-automated (SAUT) ultrasonic testing using phased array.

Automated ultrasonic examination (AUT) is a technique of ultrasonic examination performed with equipment and search units that are mechanically mounted and guided, remotely operated, and motor-controlled (driven) without adjustments by the technician. The equipment used to perform the examinations is capable of recording the ultrasonic response data, including the scanning positions, by means of integral encoding devices such that imaging of the acquired data can be performed.

Semi-automated ultrasonic examination (SAUT) is a technique of ultrasonic examination performed with equipment and search units that are mechanically mounted and guided, manually assisted (driven), and which may be manually adjusted by the technician. The equipment used to perform the examinations is capable of recording the ultrasonic response data, including the scanning positions, by means of integral encoding devices such that imaging of the acquired data can be performed.

3.2.6.20.2 Phased array ultrasonic testing (PAUT) shall be conducted in accordance with the procedures based on ISO 13588:2019, ISO 18563-1:2015, ISO 18563-2:2017, ISO 18563-3:2015 and ISO 19285:2017 or agreed standards and appropriate RS requirements.

3.2.6.20.3 PAUT procedure shall be written and include the following information as in minimum shown in Table 3.2.6.20.3. When an essential variable shall change from the value specified in Table 3.2.6.20.3, or range of values, the written procedure shall require requalification. When a nonessential variable shall change from the specified value, or range of values, requalification of the written procedure is not required. All changes of essential or nonessential variables from the value, or range of values, specified by the written procedure shall require revision of, or an addendum to, the written procedure.

Table 3.2.6.20.3

Requirements of a phased array ultrasonic testing procedure (PAUT)

Requirement	**Essential Variable**	**Nonessential Variable**
Material types or weld configurations to be examined, including thickness dimensions and material product form (castings, forgings, pipe, plate, etc.)	X	–
The surfaces from which the examination shall be performed	X	–
Technique(s) (straight beam, angle beam, contact, and/or immersion)	X	–
Angle(s) and mode(s) of wave propagation in the material	X	–
Search unit type, frequency, element size and number, pitch and gap dimensions, and shape	X	–
Focal range (identify plane, depth, or sound path)	X	–
Virtual aperture size (i.e., number of elements, effective height[1], and element width)	X	–
Focal laws for E-scan and S-scan (i.e., range of element numbers used, angular range used, element or angle increment change)	X	–
Special search units, wedges, shoes, or saddles, when used	X	–
Ultrasonic instrument(s)	X	–
Calibration [calibration block(s) and technique(s)]	X	–
Directions and extent of scanning	X	–
Scanning (manual vs. automatic)	X	–
Method for sizing indications and discriminating geometric from flaw indications	X	–
Computer enhanced data acquisition, when used	X	–
Scan overlap (decrease only)	X	–
Personnel performance requirements, when required	X	–
Testing levels, acceptance levels and/or recording levels	X	–
Personnel qualification requirements	–	X
Surface condition (examination surface, calibration block)	–	X
Couplant (brand name or type)	–	X
Post-examination cleaning technique	–	X
Automatic alarm and/or recording equipment, when applicable	–	X
Records, including minimum calibration data to be recorded (e.g., instrument settings)	–	X
Environmental and safety issues	–	X

[1] Effective height is the distance from the outside edge of the first to last element used in the focal law.

3.2.6.20.4 Preparation for testing.

3.2.6.20.4.1 Testing levels.

The testing levels of PAUT examination specified in the testing procedure shall be in accordance with ISO 13588:2019 identifying four testing levels, each corresponding to a different probability of detection imperfections (defects).

The requirements to welded joint examination shall be in accordance with ISO 13588:2019 and the requirements below.

Materials subject to PAUT examinations shall comply with Table 3.1.1.3.

3.2.6.20.4.2 Volume to be inspected.

The purpose of the testing shall be defined by the testing procedure. Based on this, the volume to be inspected shall be determined.

A scan plan shall be provided. The scan plan shall show the beam coverage, the weld thickness and the weld geometry. Ultrasonic beams overlapping the volume to be inspected shall be ensured.

If the evaluation of the indications is based on amplitude only, an E-scan (or linear scan) shall be utilized to scan the fusion faces of welds, so that the sound beam is perpendicular to the fusion face ± 5º. This requirement may be omitted if an S-scan (or sectorial scan) can be demonstrated to verify that discontinuities at the fusion face can be detected and sized, using the stated procedure (note, this demonstration shall utilize reference blocks containing suitable reflectors in location of fusion zone).

3.2.6.20.4.3 Reference blocks.

Depending on the testing level, a reference block shall be used to determine the adequacy of the testing (e.g. coverage, sensitivity setting). The design and manufacture of reference blocks shall be in accordance with ISO 13588:2019 or recognized equivalent standards and the specific requirements of the Register.

3.2.6.20.4.4 Indication assessment.

Indications detected when applying testing procedure shall be evaluated either by length and height or by length and maximum amplitude. Indication assessment shall be in accordance with ISO 19285:2017 or recognized standards and the specific requirements of the Register. The sizing techniques include reference levels, Time Corrected Gain (TCG), Distance Gain Size (DGS) and 6 dB drop. 6 dB drop method shall only be used for measuring the indications larger than the beam width.

3.2.6.21 Time of flight diffraction (TOFD).

3.2.6.21.1 Time of flight diffraction (TOFD) is based on interaction of ultrasonic waves with the imperfection edges. This imperfection result in radiation of diffraction waves in the wide angle range. Detection of diffraction waves allows to identify the imperfection availability.

Time of flight diffraction (TOFD) shall be carried out in accordance with procedure based on ISO 10863:2011 and ISO 15626:2018 or recognized standards and the specific requirements of the Register.

3.2.6.21.2 TOFD procedure shall be written and include the following information as shown in Table 3.2.6.21.2. When an essential variable in Table 3.2.6.21.2 shall change from the specified value, or range of values, the written procedure shall require requalification. When a nonessential variable shall change from the specified value, or range of values, requalification of the written procedure is not required. All changes of essential or nonessential variables from the value, or range of values, specified by the written procedure shall require revision of, or an addendum to, the written procedure.

3.2.6.21.3 Preparation for testing.

3.2.6.21.3.1 Testing levels.

Testing levels of TOFD examination specified in the procedure shall comply with ISO 10863:2011 identifying four testing levels, each corresponding to a different probability of detection of imperfections.

3.2.6.21.3.2 Volume to be inspected.

The purpose of the testing shall be defined by the testing procedure. Based on this, the volume to be inspected shall be determined.

A scan plan shall be provided. The scan plan shall show the locations of the probes, beam coverage, the weld thickness and the weld geometry. Ultrasonic beams overlapping the volume to be inspected shall be ensured.

Due to the nature of the TOFD method, there is a possibility that the scan plan may reveal weld volume zones that will not receive full TOFD coverage (commonly known as dead zones, either in the lateral wave, back wall, or both). If the scan plan reveals that these dead zones are

not adequately inspected, then further TOFD scans and/or complementary NDT methods shall be applied to ensure full inspection coverage.

Table 3.2.6.21.2

Requirements for a time of flight diffraction procedure (TOFD)

Requirement	Essential Variable	Nonessential Variable
Weld configurations to be examined, including thickness dimensions and material product form (castings, forgings, pipe, plate, etc.)	X	–
The surfaces from which the examination shall be performed	X	–
Angle(s) of wave propagation in the material	X	–
Search unit type(s), frequency(ies), and element size(s)/shape(s)	X	–
Special search units, wedges, shoes, or saddles, when used	X	–
Ultrasonic instrument(s) and software(s)	X	–
Calibration [calibration block(s) and technique(s)]	X	–
Directions and extent of scanning	X	–
Scanning (manual vs. automatic)	X	–
Data sampling spacing (increase only)	X	–
Method for sizing indications and discriminating geometric from flaw indications	X	–
Computer enhanced data acquisition, when used	X	–
Scan overlap (decrease only)	X	–
Personnel performance requirements, when required	X	–
Testing levels, acceptance levels and/or recording levels	X	–
Personnel qualification requirements	–	X
Surface condition (examination surface, calibration block)	–	X
Couplant (brand name or type)	–	X
Post-examination cleaning technique	–	X
Automatic alarm and/or recording equipment, when applicable	–	X
Records, including minimum calibration data to be recorded (e.g., instrument settings)	–	X
Environmental and safety issues	–	X

3.2.7 Report on the results of non-destructive testing of welded joints.

3.2.7.1 Reports on non-destructive testing of welded joints shall be prepared by the manufacturer of welded structures and submitted to the RS surveyor.

3.2.7.2 Reports on non-destructive testing of welded joints shall contain general information for all control methods:

date of testing;

surname, name, qualifications level and of the person's signature performing the test;

identification of the tested item;

identification of tested welds;

category (type) of material, type of connection (joint), thickness of the base metal, method (procedure) of welding;

procedures and testing level as well as an acceptance level of the revealed discrepancies of welds;

applicable standards and rules;

applicable test equipment and devices;

restrictions on testing, testing conditions and temperature;

test results with reference to the relevant criteria, location and size of the imperfections to be considered;

assessment of testing results as per the alternative system of "fit-unfit" ("acceptance — non-acceptance");

quantity of corrections if one area of control was under repairs more than twice.

3.2.7.3 For dye penetrant control methods report on the tests shall include the following additional special items:

type of indicator penetrant;

applicable purifier and developer;

drying time (conditioning before removal) of indicator penetrant;

development time.

3.2.7.4 For magnetic particle inspection report on tests shall include the following special items:

type of magnetization;

total magnetic intensity;

view of a magnetic suspension (magnetic ink);

conditions for examination of the tested surface;

product demagnetization procedure at the end of control if required.

3.2.7.5 For radiographic testing method report on tests shall include the following special items:

type of radiation source and the maximum size of the focal spot of the radiation source;

during X-ray examination voltage on a tube of an X-ray apparatus;

type of a radiographic film;

type of intensifying screens;

X-raying scheme, exposure time and distance from the focal spot of the radiation source to the radiographic film;

control sensitivity, type and location of an indicator of image quality;

optical density of the image;

geometric blur images;

number of radiographs (exposures);

angle of radiation beam through the weld (from normal).

3.2.7.6 For ultrasonic testing method report on tests shall include the following special items:

information on the used control instruments (type, model and serial number of the flaw detector, type, frequency, PEC angle of entry and registration number, couplant);

setting method and level of sensitivity;

correction method and actual value of the sensitivity allowance;

type and designations of used standard specimens (sample units) and standard specimens used for equipment settings;

type of the return (echo) signal used to detect imperfections.

3.2.7.7 The inspection records specified in 3.2.7 the records of repaired welds.

3.2.8 Technique and procedure of advanced non-destructive testing (ANDT).

3.2.8.1 General.

The shipbuilder or manufacturer shall submit to the Register the following documentation for review:

the technical documentation of the ANDT.

the operating methodology and procedure of the ANDT in accordance with the requirements of 3.2.11;

result of software simulation, when applicable.

3.2.8.2 Software simulation.

Software simulation may be required by the Register, when applicable for PAUT or TOFD techniques. The simulation may include initial test set-up, scan plan, volume coverage, result image of artificial flaw etc. In some circumstances, artificial defect modeling/simulation may be needed or required by the project.

3.2.8.3 Procedure qualification test.

The procedure qualification for ANDT system shall include the following steps:

review of available performance data for the inspection system (detection abilities and defect sizing accuracy);

identification and evaluation of significant parameters and their variability;

planning and execution of a repeatability and reliability test program which includes onsite demonstration;

documentation of results from the repeatability and reliability test programs.

N o t e . The data from the repeatability and reliability test program shall be analyzed with respect to comparative qualification block test report and onsite demonstration. The qualification block shall be in accordance with ASME Sec. V, Art. 14, Appendix II, or agreed by the Register, and at least the intermediate level qualification blocks shall be used. The high-level qualification blocks shall be used when sizing error distributions and an accurate POD need to be evaluated. The demonstration process onsite shall be witnessed by the Register surveyor.

3.2.8.4 NDT procedure approval.

The testing procedure shall be evaluated based upon the qualification results, if satisfactory, the procedure can be considered approved.

3.2.8.5 Onsite review.

For the test welds, supplementary ANDT shall be performed on an agreed proportion of welds to be cross checked with other methods. Alternatively, other documented reference techniques may be applied to compare with ANDT results.

Data analyses shall be performed in accordance with the above activities. Probability of detection (PoD) and sizing accuracy shall be established when applicable.

When the result of inspection review does not conform to the approved procedure, the inspection shall be suspended immediately. Additional procedure review qualification and demonstration shall be undertaken to account for any non-conformity.

When a significant non-conformity is found, the Register has the right to reject the results of such activities.

3.2.9 Surface condition.

Area to be examined shall be free from scale, loose rust, weld spatter, oil, grease, dirt or paint that might affect the sensitivity of the testing method.

Where there is a requirement to carry out PAUT or TOFD through paint, the suitability and sensitivity of the test shall be confirmed through an appropriate transfer correction method defined in the procedure. In all cases, if transfer losses exceed 12 dB, the reason shall be considered and further preparation of the scanning surfaces shall be carried out, if applicable. If testing is done through paint, then the procedure shall be qualified on a painted surface.

The requirement for acceptable test surface finish shall ensure accurate and reliable detection of defects. For the testing of welds, where the test surface is irregular or has other features likely to interfere with the interpretation of NDT results, the weld shall be ground or machined.

3.2.10 Welding processes for which the advanced non-destructive testing (ANDT) may apply are given in Table 3.2.10.

Table 3.2.10

Welding processes for which the advanced non-destructive testing (ANDT) may apply

Welding process		**ISO 4063:2009**
Manual welding	Shield Metal Arc Welding(SMAW)	111
Resistance welding	Flash welding(FW)	24
Semi-automatic welding	1. Metal Inert Gas welding(MIG) 2. Metal Active Gas welding(MAG) 3. Flux Cored Arc Welding(FCAW)	131 135, 138 136
TIG welding	Gas Tungsten Arc Welding(GTAW)	141
Automatic welding	1. Submerged Arc Welding(SAW) 2. Electro-gas Welding(EGW) 3. Electro-slag Welding(ESW)	12 73 72

3.2.11 Requirements to examination using the advanced non-destructive testing (ANDT). General.

3.2.11.1 The shipyard or manufacturer shall ensure that personnel carrying out NDT or interpreting the results of NDT are qualified to the appropriate level in accordance with 3.1.2.2 — 3.1.2.4.

3.2.11.2 ANDT specifications (procedures).

All advanced non-destructive testing (ANDT) shall be carried out to a procedure that is representative of the item under inspection.

Procedures shall identify the component (or area) to be examined, the NDT method, equipment to be used and the full extent of the examinations including any test restrictions.

Procedures shall include the requirement for components to be positively identified and for a datum system or marking system to be applied to ensure repeatability of inspections.

Procedures shall include the method and requirements for equipment calibrations and functional checks, together with specific technique sheets / scan plans, for the component under test.

Procedures shall be approved by personnel qualified to Level 3 in the appropriate technique in accordance with a recognized standard.

Procedures shall be reviewed by the Register.

3.2.11.3 The requirements for the procedure of the advanced non-destructive testing method PAUT shall be as a minimum in accordance with 3.2.6.20. Depending on the complexity of the item under test and the access to surfaces, there may be a requirement for additional scans and/or complementary NDT techniques to ensure that full coverage of the item is achieved. PAUT of welds shall include a linear scan of the fusion face, together with other scans as defined in the specific test technique. Linear scan requirements are specified in 3.2.6.20.4.

3.2.11.4 The requirements for the procedure of the advanced non-destructive testing method TOFD shall be a minimum in accordance with 3.2.6.21. Depending on the complexity of the item under test and the access to surfaces, there may be a requirement for additional scans and/or complementary NDT techniques to ensure that full coverage of the item is achieved.

3.2.11.5 The requirements for the procedure of the advanced non-destructive testing method of digital radiography (RT-D) shall be as a minimum in accordance with 3.2.5.13 where two RT-D techniques — DDA and CR — are specified.

Application of other digital radiography (RT-D) methods may be considered, provided their compliance with the requirements of 3.2.5.13.

3.2.12 Reporting of examination of welded joints using the advanced non-destructive testing (ANDT).

The test report shall include at least the following information:
a reference to standards of compliance;
information relating to the object under test:
identification of the object under test;
dimensions including wall thickness;
material type and product form;
geometrical configuration;
location of welded joint(s) examined;
reference to welding process and heat treatment;
surface condition and temperature;
stage of manufacture;
information relating to equipment (given in Table 3.2.12-1);

Table 3.2.12-1

Method	Information
All	Manufacturer and type of instrument, including with identification numbers if required.
PAUT	1. Manufacturer, type, frequency of phased array probes including number and size of elements, material and angle(s) of wedges with identification numbers if required, 2. details of reference blocks with identification numbers if required, 3. type of couplant used.
TOFD	1. Manufacturer, type, frequency, element size and beam angle(s) of probes with identification numbers if required, 2. details of reference block(s) with identification numbers if required, 3. type of couplant used.
RT-D	1. System of marking used, 2. radiation source, type and size of focal spot and identification of equipment used, 3. detector, screens and filters and detector basic spatial resolution.

d) information relating to test technology (given in Table 3.2.12-2):

Table 3.2.12-2

Method	Information
All	1. Testing level and reference to a written test procedure; 2. purpose and extent of test; 3. details of datum and coordinate systems; 4. method and values used for range and sensitivity settings; 5. details of signal processing and scan increment setting; 6. access limitations and deviations from standards, if any
PAUT	1. Increment (E-scans) or angular increment (S-scans); 2. element pitch and gap dimensions; 3. focus (calibration should be the same as scanning); 4. virtual aperture size, i.e. number of elements and element width; 5. element numbers used for focal laws; 6. documentation on permitted wedge angular range from manufacturer; 7. documented calibration; TCG and angle gain compensation; 8. scan plan
TOFD	1. Details of TOFD setups; 2. details of offset scans, if required.

Method	Information
RT-D	1. Detector position plan; 2. tube voltage used and current or source type and activity; 3. time of exposure and source-to-detector distance; 4. type and position of image quality indicators (IQI); 5. achieved and required SNR_N for RT-S (DDA) or achieved and required grey values and/or SNR_N for RT-CR (CR); 6. for RT-S (DDA): type and parameters such as: gain, frame time, frame number, pixel size, calibration procedure 7. for RT-CR (CR): scanner type and parameters such as pixel size, scan speed, gain, laser intensity; laser spot size; 8. image-processing parameters used; e.g. of the digital filters

3.3 SCOPE OF NON-DESTRUCTIVE TESTING

3.3.1 The scope of non-destructive testing of hull welds in the inspection plan approved by the Register shall be determined in accordance with Table 3.3.1.

Table 3.3.1

Nos.	Test location	Type of welded joint	Scope of testing		
			visual and measurement testing, %[1, 2]	radiographic and ultrasonic testing, number of radiographs	
			Ship area		
			fore-and-aft	within 0,4*L* amidships	outside 0,4*L* amidships
1	Plating butts (mainly intersections with seams): strength deck outside hatch line sheerstrake (in area 0,1D below strength deck) bilges (in area 0,1D above bottom) bottom Butts: of hatch side coamings of thickened deck plates in way of hatchway corners and at ends of superstructures of longitudinal bulkheads (in area 0,1D below strength deck)	Butt weld	100	About 0,60N	Random[3]
2	Hull plating butts — remaining[4] (mainly intersections with seams)	Butt weld	100	About 0,20N	Random[3]
3	Hull plating seams	Butt weld	100	About 0,20N	Random[3]
4	Welded joints of longitudinal stiffeners (in longitudinal framing): of strength deck outside hatch line of sheerstrake (in area 0,1D below strength deck) of bilge (in area 0,1D above bottom) of longitudinal bulkheads (in area 0,1D below strength deck) of bottom	Butt weld	100	1 radiograph per 5 butts (mainly mounting butts)	Random[3]
5	Welded joints of longitudinal stiffeners (in longitudinal framing) in other places not specified under item 4	Butt weld	100	1 radiograph per 10 butts (mainly mounting butts)	Random[3]
6	Welded joints of transverse stiffeners (in transverse framing)	Butt weld	100	1 radiograph per 10 butts	Random[3]
7	Welded joints on sternframe	Butt weld	100	–	50 % of hull plating welded joints in way of sterntube[5]
8	Welded joints between deck stringer and sheerstrake[6] (in way of intersection with butt welds)	Fillet weld or T-joint, full penetration	100	4 controlled lengths along the 1st plate	Random[3]
9	Welded joints on the welded stem	Butt, fillet weld or T-joint, full penetration	100		50 % of hull plating welded joints with stem plates, 50 % of welded joints of stem plates

[1] Where there are doubts as to the results of visual and measurement testing, penetrant or magnetic particle testing may be carried out.
[2] All welded joints (including those not specified in the table) shall undergo testing.
[3] The number of weld lengths undergoing testing shall be up to 20 % of the lengths specified for the area 0,4L amidships.
[4] Where ice strengthened, the ice belt butts shall mainly be tested.
[5] Intersections between seams and butts shall be tested.
[6] Ultrasonic testing is recommended.

Block construction welds performed in the yards, or at subcontracted yards/facilities, shall be primarily considered in selecting checkpoints. For other hull structures and offshore installations the extent shall be agreed with the Register.

The number of weld lengths in shell plating for 0,4*L* amidships to undergo radiographic or ultrasonic testing shall be determined by the following formula:

$$N = \frac{L(B+D)}{45} T \qquad (3.3.1)$$

where N = number of controlled weld lengths;
L = length of ship, in m;
B = breadth of ship, in m;
D = depth of ship, in m;
T = factor depending on ship type and manufacturing conditions and determined at the approval of the inspection plan. Following are the maximum values of the factor T for various ship types:
up to 0,7 for ships having the length L < 60 m;
up to 0,9 for ships having the length 60 m ≤ L < 80 m;
up to 1,1 for dry cargo ships, bulk carriers, special purpose ships, supply vessels, fishing vessels and ro-ro ships;
up to 1,2 for ships for carriage of heavy bulk cargoes, ore carriers, ore or oil carriers and oil or bulk dry cargo carriers; up to 1,3 for oil tankers and container ships.

For ships not listed above, the factor *T* is determined in agreement with the Register.

It is assumed in the calculation that the controlled weld length is 0,5 m.

The scope of the non-destructive testing of welded joints using the radiographic or ultrasonic testing for type ships (when applying the manufacture of new products, and also during repair, modification and conversion) may be increased as compared to the values determined by Formula (3.3.1) and given in Table 3.3.1 by the Register or designer's demand.

Where structural elements are welded into a rigid contour (cutouts with the ratio of the minimum dimension to a shell thickness of 60 and less), the fully penetrated butt and tee-joints of the hull plating shall be checked along their entire length, and the remaining structures, to the extent of at least 20 % of their length using the radiographic or ultrasonic testing.

The radiographic or ultrasonic testing of the welded joints of the structures subjected to treatment under pressure (bending, stamping, etc.) shall be executed along the entire length of the welded joints of these structures after treatment under pressure. When the structures are subjected to heat treatment after treatment under pressure, the radiographic or ultrasonic testing shall be carried out thereafter.

3.3.2 Non-destructive testing of welded joints of hull structures of container ships manufactured of extremely thick steel plates.

Ultrasonic testing (UT) in compliance with 3.2.6 shall be carried out on all block-to-block butt joints of all upper flange longitudinal structural members in the cargo hold region, including the topmost strakes of the inner hull/bulkhead, the sheer strake, main deck, coaming plate, coaming top plate, and all attached longitudinal stiffeners (refer to Fig. 3.3.2).

Notes: 1. Acceptance criteria of UT shall be in accordance with 3.4.6 and/or recognized standards.

2. The acceptance criteria may be adjusted under consideration of the appertaining brittle crack initiation prevention procedure, and where this is more severe than that found in the Rules and standards, the acceptance criteria shall be amended accordingly to a more severe sensitivity.

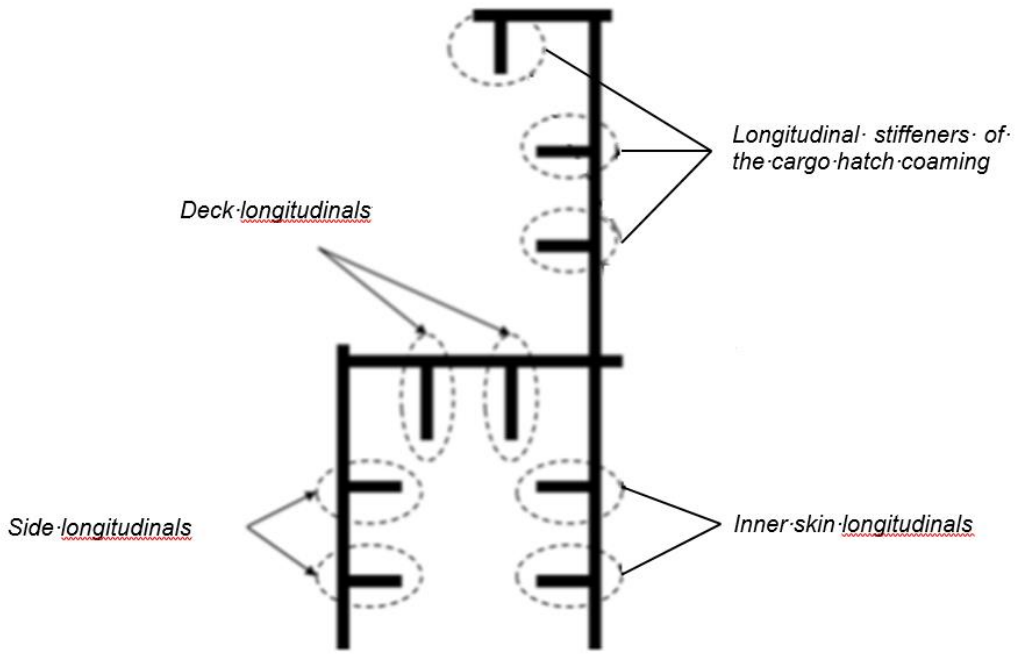

Fig. 3.3.2
Upper flange longitudinal structural members

3.3.3 The welded joints of steam boilers, pressure vessels and heat exchangers shall be subjected to non-destructive testing within the scope specified in Table 3.3.3 depending on the class of structure (refer to 1.3.1.2, Part X "Boilers, Heat Exchangers and Pressure Vessels").

3.3.4 The welded joints of piping, depending on their class indicated in Table 1.3.2, Part VIII "Systems and Piping", shall be subjected to non-destructive testing within the scope specified in Table 3.3.4.

3.3.5 Besides the structures specified in Tables 3.3.1, 3.3.3 and 3.3.4, such elements of machinery and gear as joints in cargo masts and posts, etc. are subject to non-destructive testing. The controlled weld lengths in these structures shall be established upon agreement with the surveyor in connection with the requirements of parts of the Rules specifying such structures.

3.3.6 The surveyor may determine a distribution of non-destructive testing weld lengths differing from that specified in the approved inspection plan depending on the particular conditions, under which welding is carried out.

3.3.7 The works shall determine, on the basis of radiographic and ultrasonic testing, the percentage of welded joint defects not less than once in six months and report the results to the Register.

The percentage of defects in welded joints shall be determined by the following formula:

$$K = 100l/s \qquad (3.3.7)$$

where K = welded joint defect percentage;
l = total length of controlled welds found unsatisfactory, in m;
s = total weld length controlled, in m.

If the percentage of defects is more than 5, the Register is entitled to require, for every per cent of rejected welds exceeding this value, an increase in the number of controlled weld lengths by 10 %.

The number of controlled weld lengths may be reduced if the surveyor finds the general standard of welding operations satisfactory.

Table 3.3.3

Class of structure (boilers, pressure vessels and heat exchangers)	Type of welded joint	Scope of welded joint testing as percentage of total weld length	
		visual[1]	radiographic or ultrasonic
I	Longitudinal	100	100
II			25
III			Random
I	Circumferential		50
II			25
III			Random
I	Local[2]		—
II			
III			

[1] In case of doubts in the results of visual testing, penetrant or magnetic particle testing may be carried out.
[2] Welded joints of branches, nozzles, pads, manholes, opening reinforcement structures, etc.

Table 3.3.4

Class of piping	Outer diameter of pipe, mm	Scope of welded joint testing as percentage of total weld length	
		visual[1]	radiographic or ultrasonic
I	≤ 75	100	10[2]
	> 75		100
II	≤ 100		Random
	> 100		10[2]
III	Any		Random

[1] In case of doubts in the results of visual testing, dye penetrant or magnetic particle testing may be carried out.
[2] But not less than one welded joint made by a particular welder.

3.3.8 Consideration may be given for reduction of inspection frequency for automated welds where quality assurance techniques indicate consistent satisfactory quality.

The number of checkpoints shall be increased if the proportion of non-conforming indications is abnormally high.

3.3.9 For the purpose of conversion and repair of ships and craft, the number of controlled weld lengths is determined by the Register proceeding from the scope of welding and the importance of structures bearing the above in mind.

3.3.10 Non-destructive testing of the friction stir welded joints of structures made of aluminium alloys.

3.3.10.1 Non-destructive testing of the friction stir welded joints of structures made of aluminium alloys shall be performed by visual and measuring testing (in accordance with ISO 17637:2003), radiographic testing (in accordance with ISO 17636:2013) and ultrasonic testing (in accordance with ISO 17640:2010).

3.3.10.2 Non-destructive testing of the friction stir welded joints of structures made of aluminium alloys shall be carried out in scope:

visual (VT) and measuring testing — 100% of length of the welded joint;

radiographic testing (RT) or ultrasonic testing (UT) for the thickness of 8 mm and more or by advanced non-destructive testing (ANDT) — 100% of length of the welded joint.

3.3.10.3 When applying advanced non-destructive testing (ANDT), for example, phased array ultrasonic testing (PAUT) the range of controlled thicknesses of the friction stir welded

joints shall be defined in accordance with the approved specifications (procedures) for this testing method.

3.3.10.4 In case of doubt in the results of visual testing, penetrant testing (in accordance with ISO 3452-1:2008) may be applied.

3.4 ASSESSMENT OF WELDED JOINT QUALITY IN HULL STRUCTURAL STEEL

3.4.1 General.

3.4.1.1 Assessment of welded joint quality in hull structural steel shall be carried out based on the quality levels in compliance with the relevant requirements of ISO 5817 or other agreed international and national standards.

3.4.1.2 Quality level requirements in compliance with ISO 5817:2014 for the hull structural steel shall be assigned in accordance with the instructions of Table 3.4.1.2.

Table 3.4.1.2

Structural member category[1]	Type of welded joints	Minimum quality level in compliance with ISO 5817:2014 for ships with the following length			
		L ≤ 250 m		*L* > 250 m	
		Within 0,4*L* amidships	Without 0,4*L* amidships[2]	Within 0,4*L* amidships	Without 0,4*L* amidships[2]
III	Butt joints	B	B	B	B
	Fillet joints, T-joints and cruciform joints with full penetration	B	B	B	B
	Fillet joints, T-joints and cruciform joints with beveling and lack of structural fusion	C	C	B	C
	Fillet joints, T-joints and cruciform joints made by a fillet weld without beveling	C	C	C	C
II	Butt joints	B	C	B	C
	Fillet joints, T-joints and cruciform joints with full penetration	C	C	B	C
	Fillet joints, T-joints and cruciform joints with beveling and lack of structural fusion	C	D	C	C
	Fillet joints, T-joints and cruciform joints made by a fillet weld without beveling	C	D	C	D
I	Butt joints	C	C	C	C
	Fillet joints, T-joints and cruciform joints with full penetration	C	C	C	C
	Fillet joints, T-joints and cruciform joints with beveling and lack of structural fusion	C	D	C	D
	Fillet joints, T-joints and cruciform joints made by a fillet weld without beveling	C	D	C	D

[1] In compliance with 1.2.3.7, Part II "Hull"
[2] For welded stems of icebreakers and ice class ships, the minimum quality level shall be equal to B.

3.4.1.3 Quality level requirements in compliance with ISO 5817:2014 for boilers, heat-exchangers and piping shall be assigned in accordance with Table 3.4.1.3. For welded joints of steel structures, components and machinery of cargo handling gear (in accordance with 3.2 of the Rules for the Cargo Handling Gear of Sea-Going Ships) the B quality level shall apply in compliance with ISO 5817:2014.

Table 3.4.1.3

Class of structure[1]	Type of welded joint	Minimum quality level in compliance with ISO 5817	
		Boilers and heat exchangers	Piping
I	Plate butt	B	B
	Fillet joints, T-joints and cruciform joints with full penetration	B	B
	Fillet joints, T-joints and cruciform joints with beveling and structural lacks of fusion	B	B
	Fillet joints, T-joints and cruciform joints performed by a fillet weld without beveling	C	C
II	Plate butt	B	B
	Fillet joints, T-joints and cruciform joints with full penetration	B	B
	Fillet joints, T-joints and cruciform joints with beveling and structural lacks of fusion	C	C

Class of structure[1]	Type of welded joint	Minimum quality level in compliance with ISO 5817	
		Boilers and heat exchangers	Piping
	Fillet joints, T-joints and cruciform joints performed by a fillet weld without beveling	C	C
III	Plate butt	B	B
	Fillet joints, T-joints and cruciform joints with full penetration	C	C
	Fillet joints, T-joints and cruciform joints with beveling and structural lacks of fusion	C	C
	Fillet joints, T-joints and cruciform joints performed by a fillet weld without beveling	C	C

[1] In compliance with 1.3.2, Part VIII "Systems and Piping" and 1.3.1.2, Part X "Boilers, Heat Exchangers and Pressure vessels".

3.4.1.4 For specific non-destructive testing procedure acceptable levels of imperfection acceptance in accordance with the established quality levels as per ISO 5817:2014, as well as the requirements for the class and procedure of control are specified by ISO 17635:2016 and as a rule they shall be assigned in accordance with Table 3.4.1.4.

Table 3.4.1.4

Quality level in accor-dance with ISO 5817	Radiographic testing		Ultrasonic (US) testing[1]		Visual and Inspection testing		Magnetic Particle testing		Penetrant testing	
	Testing techniques and classes in accor-dance with ISO 17636	Acceptance levels in accordance with ISO 10675-1	Testing technique and level in accordance with ISO 17640	Acceptance level in accordance with ISO 11666	Testing technique and level in accordance with ISO 17637	Acceptance level[2]	Testing techniques and classes in accor-dance with ISO 17638	Acceptance levels in accor-dance with ISO 23278	Testing technique and level in accordance with ISO 3452	Acceptance levels in accordance with ISO 23277
B	B	1	at least B	2	Testing level is not specified	B	Testing level is not specified	2×3	Testing level is not specified	2×[3]
C	B4	2	at least A	3		C		2×3		2×[3]
D	A	3	at least A5	3[5]		D		3×3		3×[3]

[1] In case the definition of the imperfections character is required ISO 23279 is applied.
[2] Acceptance level for visual and inspection testing are incompliance with Quality Levels in accordance with ISO 5817.
[3] Quality levels 2 and 3 can have index «×» which designates all imperfections above 25 mm and are not permitted.
[4] The minimum number of exposure for circumferential weld testing may correspond to the requirements of class A of ISO 17636.
[5] UT in accordance with ISO 11666 for Level Quality D (ISO 5817) is not recommended, but upon its application it can be defined with the same requirements as Quality level C (ISO 5817).

3.4.1.5 Assessment of the welded joints quality within each level of assessment of imperfections shall be performed as per an alternative system of "fit — unfit" ("acceptance – non-acceptance") applying assessment criteria, according to 3.4.2, 3.4.3, 3.4.4, 3.4.5, 3.4.6.

3.4.2 Assessment of the welded joints quality by the visual and measurement testing results.

3.4.2.1 If otherwise is not agreed with the Register, assessment of the welded joints quality on the visual and measurement testing results shall be carried out in accordance with ISO 5817:2014 for external imperfections (refer to Table 3.4.2.1) for quality levels specified as per 3.4.1.2 or 3.4.1.3.

3.4.2.2 All imperfections detected on the visual and measurement testing results shall be removed and the location of corrections shall be tested again in compliance with 3.2.1.

3.4.2.3 On the visual and measurement testing results the welded joints shall be considered fit/accepted if inadmissible imperfections are not detected for an acceptable level listed in Table 3.4.2.1.

3.4.3 Assessment of the welded joints quality by the magnetic particle testing results.

3.4.3.1 If otherwise is not agreed with the Register, assessment of the welded joints quality on the magnetic particle testing results shall be carried out in accordance with

ISO 23278:2015 (refer to Table 3.4.3.1) for the quality levels specified by the requirements of 3.4.1.2 or 3.4.1.3.

3.4.3.2 To reduce the dimensions or remove the imperfections that caused inadmissible indicator beads (indications), local grinding or cleaning can be used if permitted as per the production specifications for a particular product. Location of corrections shall be subject to re-inspection and assessment in accordance with the specification used for the initial testing as per 3.2.1.

3.4.3.3 On the magnetic particle testing results the welded joints shall be considered fit/accepted if inadmissible imperfections are not detected for an acceptable level listed in Table 3.4.3.1.

3.4.4 Assessment of the welded joints quality by the dye penetrant testing results.

3.4.4.1 If otherwise is not agreed with the Register, assessment of the welded joints quality on the dye penetrant testing results shall be carried out in accordance with ISO 23277:2015 (refer to Table 3.4.4.1) for the quality levels specified by the requirements 3.4.1.2 or 3.4.1.3.

3.4.4.2 To reduce the dimensions or remove the imperfections that caused inadmissible indicator beads (indications), local grinding or cleaning can be used if permitted as per the production specifications for a particular product. Location of corrections shall be subject to re-inspection and assessment in accordance with the specification used for the initial testing as per 3.2.1.

Table 3.4.2.1

No	Imperfection designation Reference to	ISO 6520	Specifications of imperfections and the weld dimensions	Limits for imperfections for quality levels ISO 5817			Remarks
				B	C	D	
1	Crack	100	–	Not permitted			
2	Crater crack	104	–	Not permitted			
3	Surface pore 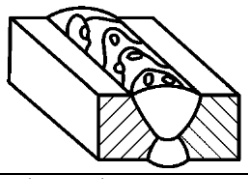	2017	*d* — maximum dimention:				Clusters and lines on the weld surface are not permitted
			butt welds;	Not permitted	*d* ≤ 0,2*s* but max. 2,0 mm	*d* ≤ 0,3*s* but max. 3,0 mm	
			fillet welds	Not permitted	*d* ≤ 0,2*a* but max. 2,0 mm	*d* ≤ 0,3*a* but max. 3,0 mm	
4	End crater pipe 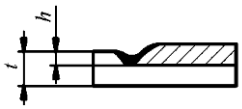	2025	*h* — crater height (cross sectional dimension of under cut)	Not permitted	*h* ≤ 0,10*t* but max. 1,0 mm	*h* ≤ 0,20*t* but max. 2,0 mm	For levels C and D may not be permitted under painting conditions
5	Lack of fusion (surfaced)	401	–	Not permitted			
6	Incomplete root penetration (for single sided butt welds)	4021	*h* — maximum height *l* — maximum length of a single imperfection	Not permitted	Not permitted	*h* ≤ 0,2*t*, but max. 2,0 mm *l* ≤ 25 mm	For level D may not be permitted under painting conditions
7	Intermittent undercut and Continuous undercut: butt weld [1] 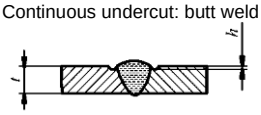	5012, 5011	*h* — maximum height	*h* ≤ 0,05*t* but max. 0,5 mm	*h* ≤ 0,10*t* but max. 0,5 mm	*h* ≤ 0,20*t*, but max. 1,0 mm	[1]Simultaneous undercut on both edges of the weld side is not permitted
	fillet joint 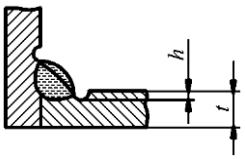		*h* — maximum height	*h* ≤ 0,05*t* but max. 0,5 mm	*h* ≤ 0,10*t* but max. 0,5 mm	*h* ≤ 0,20*t*, but max. 1,0 mm	

No	Imperfection designation Reference to	ISO 6520	Specifications of imperfections and the weld dimensions	Limits for imperfections for quality levels ISO 5817			Remarks
				B	C	D	
8	Strinkage grooves (undercuts on both sides of the weld) 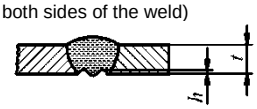	5013	*h* — maximum height	*h* ≤ 0,05*t* but m. ax0,5 mm	*h* ≤ 0,1*t* but max. 1 mm	*h* ≤ 0,2*t* but max. 2,0 mm	
			l — maximum length of a single imperfection	*l* ≤ 25 mm	*l* ≤ 25 mm	*l* ≤ 25 mm	
9	Excess weld metal 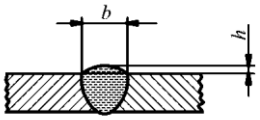	502	*h* — maximum height reinforcement *b* — breadth of reinforcement	*h* ≤ 1 mm + 0,1*b* but max. 5 mm	*h* ≤ 1 mm + 0,15*b* but max. 7 mm	*h* ≤ 1 mm +0,25*b* but max.10 mm	
10	Excessive convexity 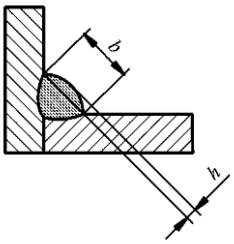	503	*h* — maximum convexity *b* — breadth of reinforcement	*h* ≤ 1 mm + 0,1*b* but max. 3 mm	*h* ≤ 1 mm +0,15*b* but max. 4 mm	*h* ≤ 1 mm +0,25*b* but max. 5 mm	
11	Excessive penetration (weld root slack) 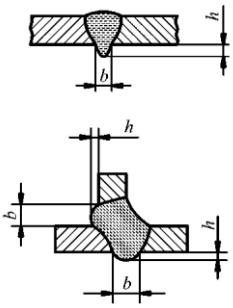	504	*h* — maximum penetration height *b* — breadth of penetration	*h* ≤ 1 mm + 0,2*b* but max. 3 mm	*h* ≤ 1 mm + 0,6*b* but max. 4 mm	*h* ≤ 1 mm + 1,0*b* but max. 5 mm	
12	Incorrect weld toe: butt welds 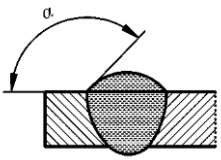	505	α — angle between base metal surface and flat surface tangent to convexity	α ≥ 150°	α ≥ 100°	α ≥ 90°	
	fillet welds $\alpha_1 \geq \alpha$, $\alpha_2 \geq \alpha$ 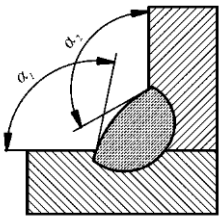			α ≥ 110°	α ≥ 110°	α ≥ 90°	For smooth transition for quality levels B and C special handling of the weld may be required
13	Overlap 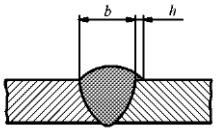	506	*h* — overlap dimension	Not permitted	Not permitted	*h* ≤ 0,2*b*	

No	Imperfection designation Reference to	ISO 6520	Specifications of imperfections and the weld dimensions	Limits for imperfections for quality levels ISO 5817			Remarks
				B	C	D	
14	Linear misalignment between plates and caps of pipes: projected as symmetrical; 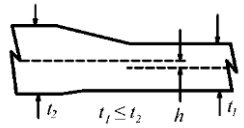	5071	*h* — height of linear misalignment defined as misalignment of axes along the thickness plates	$h \le 0{,}1t_1$ but max. 3 mm	$h \le 0{,}15t_1$ but max. 4 mm	$h \le 0{,}25t_1$ but max. 5 mm	
	projected as unsymmetrical 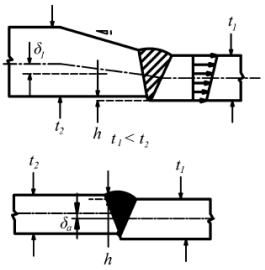		defined as deviation of external plate line	$h \le 0{,}1t_1$ but max. 3 mm	$h \le 0{,}15t_1$ but max. 4 mm	$h \le 0{,}25t_1$ but max. 5 mm	
15	Linear misalignment between tubes (pipes) 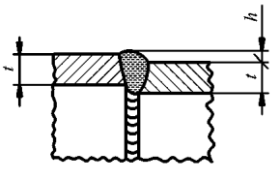	5072	*h* — height of linear misalignment defined as the deviation of the welded pipes external diameter $t = \min\{t_1$ и $t_2\}$	$h \le 0{,}5t$ but max. 2 mm	$h \le 0{,}5t$ but max. 3 mm	$h \le 0{,}5t$ but max. 4 mm	
16	Linear misalignment of cruciform joints: projected as symmetrical; 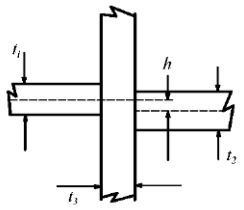		*h* — height of linear misalignment: defined as deviation of axes along the thickness plates $t = \min\{t_1, t_2$ и $t_3\}$	$h \le 0{,}15t$	$h \le 0{,}30t$	$h \le 0{,}50t$	
	projected as unsymmetrical 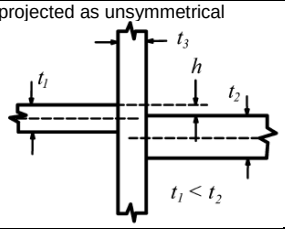		defined as deviation of common external line of plates $t = \min\{t_1, t_2$ и $t_3\}$	$h \le 0{,}15t$	$h \le 0{,}30t$	$h \le 0{,}50t$	
17	Sagging Incompletely filled groove 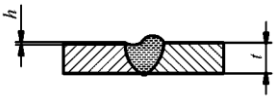	509 511	*h* — height of sagging or incompleteness of groove	$h \le 0{,}05t1$ but max. 0,5 mm	$h \le 0{,}1t$ but max. 1 mm	$h \le 0{,}25t1$ but max. 2,0 mm	
			l — length of imperfection	$l \le 25$ mm	$l \le 25$ mm	$l \le 25$ mm	
18	Burn-through (leakage of welding bath with formation of through hole in the weld)	510		Not permitted	Not permitted	Not permitted	

No	Imperfection designation Reference to	ISO 6520	Specifications of imperfections and the weld dimensions	Limits for imperfections for quality levels ISO 5817			Remarks
				B	C	D	
19	Excessive asymmetry of fillet weld 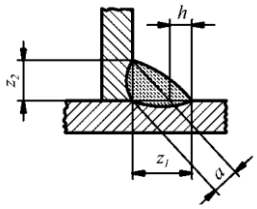	512	$h=z_1-z_2$ — height of asymmetry (different leg lengths)	$h \le 1{,}5$ mm + 0,15*a*	$h \le 1{,}5$ mm + 0,15*a*	$h \le 1{,}5$ mm + 0,15*a*	
20	Irregular surface: pimpling and scaling;	514	*h* — height of pimpling and scaling	$h \le 1{,}5$ mm	$h \le 2$ mm	$h \le 2$ mm	Height of drops between beads, height of pimpling and scaling shall be measured among tops of pimpling and scaling
	drops between beads		*h* — height of drops between beads	$h \le 1{,}5$ mm	$h \le 2$ mm	$h \le 2$ mm	
21	Root concavity 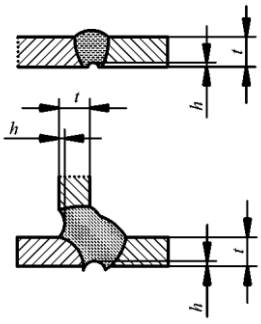	515	*h* — height of root concavity *l* — length of imperfection	$h \le 0{,}05t$ but max. 0,5 mm $l \le 25$ mm	$h \le 0{,}1t$ but max. 1 mm $l \le 25$mm	$h \le 0{,}2t$ but max. 2,0 mm $l \le 25$ mm	
22	Root porosity	516		Not permitted	Not permitted	Permitted but only local	May not be permitted for level D under conditions of painting
23	Poor restart.	517		Not permitted	Not permitted	Permitted	May not be permitted for level D under conditions of painting
24	Insufficient throat thickness 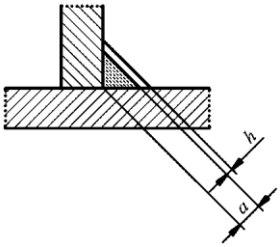	5213	*h* — height if insufficience (reduction from nominal dimension) of fillet weld thickness *a*	Not permitted	$h \le 0{,}3$ mm +0,1*a* but max. 1 mm	$h \le 0{,}3$ mm +0,1*a* but max. 1 mm	
			l — length of imperfection		$l \le 25$ mm	$l \le 25$ mm	
25	Excessive throat thickness 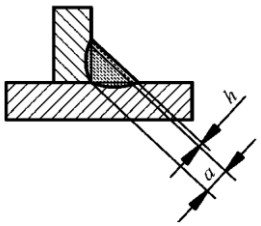	5214	*h* — height of excessive throat of fillet weld thickness *a*	$h \le 1$ mm + 0,15*a* but max. 3 mm	$h \le 1$ mm + 0,2*a* but max 4 mm	Unlimited	
26	Stray arc: local breakage of the base metal surface close to weld due to arc burning outside grooving	601		Not permitted	Not permitted	Permitted, if the properties of the base metal are not affected	Refer to Table 9.13, Part A, IACS Standard No. 47

No	Imperfection designation Reference to	ISO 6520	Specifications of imperfections and the weld dimensions	Limits for imperfections for quality levels ISO 5817			Remarks
				B	C	D	
27	Spatter	602		Not permitted	To be removed from the surface subject to coating requirements.		Refer to para. 4.2.4.2, Part A, IACS Standard No. 47
28	Incorrect root gap for fillet welds 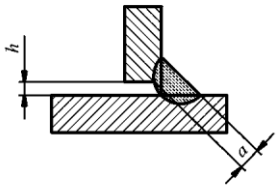	617	*h* — height of root gap of single sided weld *a* — thickness of fillet weld	*h* ≤ 0,5 mm +0,1*a* but max 2 mm	*h* ≤ 0,5 mm +0,2*a* but max 3 mm	*h* ≤ 1 mm +0,3*a* but max 4 mm	On agreement with the Register gaps exceeding the appropriate limit may be compensated for by a corresponding increase in the throat.

Table 3.4.3.1

Indicator bead type	Assessment level (quality grade) in compliance with ISO 23278:2015[1]		
	1	2	3
Linear[2]	*l* ≤ 1,5 mm	*l* ≤ 3 mm	*l* ≤ 6 mm
l — indicator bead length			
Non-linear[3]	*d* ≤ 2 mm	*d* ≤ 3 mm	*d* ≤ 4 mm
d — size of a major axis of the indicator bead			

[1] Acceptance levels 2 and 3 may include an index «» designating that all the linear indicator beads shall be assessed as per level 1.
[2] A linear indicator bead is an indicator bead with its length exceeding the width of more than three times.
[3] Non-linear indicator bead is an indicator bead with its length equal to or less than three widths.

Table 3.4.4.1

Type of indicator trace	Assessment level (quality grade) in compliance with ISO 23277:2015[1]		
	1	2	3
Linear[2]	*l* ≤ 2 mm	*l* ≤ 4 mm	*l* ≤ 8 mm
l — indicator bead length			
Non-linear[3]	*d* ≤ 4 mm	*d* ≤ 6 mm	*d* ≤ 8 mm
d — size of a major axis of the indicator bead			

[1] Acceptance levels 2 and 3 may include an index «» designating that all the linear indicator beads shall be assessed as per level 1.
[2] A linear indicator bead is an indicator bead with its length exceeding the width of more than three times.
[3] Non-linear indicator bead is an indicator bead with its length equal to or less than three widths.

3.4.4.3 On the dye penetrant testing results the welded joints shall be considered fit/accepted if inadmissible imperfections are not detected for an acceptable level listed in Table 3.4.4.1.

3.4.5 Assessment of the welded joints quality by the radiographic testing results.

3.4.5.1 At the radiographic testing assessment of the welded joints quality shall be carried out with interpretation of the images on radiographs for the following types of internal imperfections:

pores;
slag inclusions;
metal tungsten inclusions;
metal coper inclusions;
poor fusion;
lack of fusion;
cracks.

Surfaced imperfections in welds shall be assessed in compliance with 3.4.2.1.

3.4.5.2 For the dimensions of the welded joints imperfections under radiographic control shall be taken dimensions of their images on radiographs in accordance with the following requirements.

The following are accepted for the dimensions of the pores, slag or tungsten inclusions:

for spherical pores and inclusions their diameter *d*, as measured by the longest axis;

for elongated pores and inclusions their length *l* and width *h.*

N o t e . Inclusion is extended (linear) if its length is more than three times the maximum width or diameter.

For the dimensions of lack of fusion, incomplete penetration and cracks their length *l* is accepted.

If the distance between similar imperfections in-line is less than the size of the smallest imperfections, such imperfections shall be one extended imperfections. Dimensions of such an imperfection shall be defined as the distance measured by the outermost edges of the group imperfections.

If the distance between arranged parallel uniform extended imperfections is less than 3 times the width of the smallest imperfection, these imperfections shall be considered as an extended imperfection. Dimensions of such an imperfection shall be defined as the distance measured by the outermost edges of the group imperfections.

If more than one pore is located within the circle of a diameter equal to 3 times a pore diameter, such imperfections are considered group porosity or pore accumulation (cluster). For the cluster size the distance measured at the outermost edges of each other imperfections in the cluster shall be taken.

If the distance between two and more in-line uniform imperfections of one but not more than three extensions (diameter or length) of the smallest imperfections, those imperfections are called a line. For the inclusion line size the length measured at the outermost edges of each other imperfections in the line shall be taken.

3.4.5.3 If otherwise is not agreed with the Register, assessment of the welded joints quality on the radiographic testing results shall be carried out in accordance with ISO 10675-1:2016 (refer to Table 3.4.5.3) for the quality levels specified by the requirements of 3.4.1.2 or 3.4.1.3.

3.4.5.4 All detected imperfections inadmissible for the specified accepted level on the radiographic testing and measurement results shall be removed and the location of corrections shall be tested again in accordance with 3.2.1.

T a b l e 3.4.5.3

No	Imperfection designation	Reference to ISO 6520-1	Specifications of imperfections	Limits for imperfection for quality levels		
				1	2[1]	3[1]
1	Crack	100	–	Not permitted	Not permitted	Not permitted
2*a*	Gas pore and Uniformly distributed porosity Single layer weld	2011 2012	*A* — the sum of the different pore areas related to the evaluation area *Wp*×*L* *d* — maximum pore diameter	*A* ≤ 1 % *d* ≤ 0,2*s* but max. 3 mm *L* = 100 mm	*A* ≤ 1,5 % *d* ≤ 0,3*s* but max. 4 mm *L* = 100 mm	*A* ≤ 2,5 % *d* ≤ 0,4*s* but max.5 mm *L* = 100 mm
2*b*	Gas pore Uniformly distributed porosity Multi layer weld	2011 2012	*A* — the sum of the different pore areas related to the evaluation area *Wp*×*L* *d* — maximum pore diameter	*A* ≤ 2 % *d* ≤ 0,2*s* but max. 3 mm *L* = 100 mm	*A* ≤ 3,0 % *d* ≤ 0,3*s* but max. 4 mm *L* = 100 mm	*A* ≤ 5 % *d* ≤ 0,4*s* but max. 5 mm *L* = 100 mm
3	Clustered (localized) porosity	2013	*A* — the sum of the different pore areas related to the evaluation area *Wp*×*L* *d* — maximum pore diameter	*A* ≤ 4 % *d* ≤ 0,2*s* but max. 2 mm *L* = 100 mm	*A* ≤ 8 % *d* ≤ 0,3*s* but max. 3 mm *L* = 100 mm	*A* ≤ 16 % *d* ≤ 0,4*s* but max. 4 mm *L* = 100 mm
4*a*	Linear porosity (Lines) Single layer weld	2014	*A* — the sum of the different pore areas related to the evaluation area *Wp*×*L* *d* — maximum pore diameter	*A* ≤ 2 % *d* ≤ 0,2*s* but max. 2 mm *L* = 100 mm	*A* ≤ 4,0 % *d* ≤ 0,3*s* but max. 3 mm *L* = 100 mm	*A* ≤ 8 % *d* ≤ 0,4*s* but max. 4 mm *L* = 100 mm

No	Imperfection designation	Reference to ISO 6520-1	Specifications of imperfections	Limits for imperfection for quality levels		
				1	2[1]	3[1]
4*b*	Linear porosity (Lines) Multi layer weld	2014	*A* — the sum of the different pore areas related to the evaluation area *Wp*×*L* *d* — maximum pore diameter	*A* ≤ 4 % *d* ≤ 0,2s but max. 2 mm *L* = 100 mm	*A* ≤ 8,0 % *d* ≤ 0,3s but max. 3 mm *L* = 100 mm	*A* ≤ 16 % *d* ≤ 0,4s but max.4 mm *L* = 100 mm
5	Wormholes (pipes) and Elongated cavity	2016 2015	*h* — width of imperfection projection *ΣI* — maximum total length of weld imperfection projection *L*	*h* < 0, but max. 2 mm *ΣI* ≤ *s* but max. 25 mm *L* = 100 mm	*h* < 0,3 *s* but max. 3 mm *ΣI* ≤ *s* but max.50 mm *L* = 100 mm	*h* < 0,4 *s* but max.4 mm *ΣI* ≤ *s* but max. 75 mm *L* = 100 mm
6	Shrinkage cavity (except for crater pipe — 2024)	202	*h* — width of imperfection projection *I* — length of imperfection projection	Not permitted	Not permitted	*h* < 0,4 *s* but max. 4 mm *I* ≤ 25 mm
7	Crater pipe	2024	*h* — width of imperfection projection *I* — length of imperfection projection	Not permitted	Not permitted	*h* < 0,2 *t* but max. 2 mm *I* ≤ 0,2*t*, but max. 2 mm
8	Slag inclusions, Flux inclusions Oxide inclusions	301 302 303	*h* — width of imperfection projection *ΣI* — maximum total length of weld imperfection projection *L*	*h* < 0,2 *s* but max. 2 mm *ΣI* ≤ *s* but max. 25 mm *L* = 100 mm	*h* < 0,3 *s* but max. 3 mm *ΣI* ≤ *s* but max. 50 mm *L* = 100 mm	*h* < 0,4 *s* but max. 4 mm *ΣI* ≤ *s* but max. 75 mm *L* = 100 mm
9	Metallic inclusions other than copper	304	*I* — length of imperfection projection	*I* < 0,2 *s* but max. 2 mm	*I* < 0,3 *s* but max. 3 mm	*I* < 0,4 *s* but max. 4 mm
10	Copper inclusiond	3042	–	Not permitted	Not permitted	Not permitted
11[2]	Lack of fusion	401	*ΣI* — maximum total length of weld imperfection projection *L*	Not permitted	Not permitted	Permitted but only intermittent and not surfaced *I* ≤ 25 mm, *L* = 100 mm
12[2]	Lack of penetration	402	*ΣI* — maximum total length of weld imperfection projection *L*	Not permitted	Not permitted	*I* ≤ 25 mm, *L* = 100mm

Symbols:
L — any (with imperfection maximum density) 100 mm weld length;
s — nominal thickness of the butt weld;
t — material thickness;
Wp — weld width.
[1] Quality levels 2 and 3 cab have index "×" which designates all imperfections above 25 mm and are not permitted.
[2] If the weld length is under 100 mm the maximum imperfection length shall not be above 25 % of that length.

3.4.6 Assessment of the welded joints quality by the ultrasonic testing results.

3.4.6.1 If otherwise is not agreed with the Register, assessment of the ultrasonic testing results shall be carried out in accordance with the accepted levels based on the echo-signal length and amplitude as per ISO 11666:2018 (refer to Table 3.4.6.1) and the following requirements for their application and interpretation of the testing results as regards instructions of 5.1 of the above mentioned standard.

Table 3.4.6.1

Method for setting the reference level according to ISO 17640[1]	Evaluation level of sensitivity for Acceptance level[2]		Acceptance level 2 (AL 2) for thicknesses[2,3,4]		Acceptance level 3 (AL 3) for thicknesses[2,3,4]	
	2	3	8 mm ≤ *t* <15 mm	15 mm ≤ *t* <100 mm	8 mm ≤ *t* <15 mm	15 mm ≤ *t* < 100 mm
1 (side-drilled holes)	H_0 – 14 dB	H_0 – 10 dB	For *l* ≤ *t*: H_0–4 dB For *l* > *t*: H_0–10 dB	For *l* ≤ 0,5t: H_0 For 0,5*t* < *l* ≤ *t*: H_0–6 dB For *l* > *t*: H_0–10 dB	For *l* ≤ *t*: H_0 For *l* > *t*: H_0–6 dB	For *l* ≤ 0,5*t*: H_0 + 4 dB For 0,5*t* < *l* ≤ *t*: H_0–2 dB For *l* > *t*: H_0–6 dB
2 (flat-bottom holes (disk-shaped reflectors))	H_0 – 8 dB	H_0 – 4 dB	For *l* ≤ *t*: H_0 + 2 dB For *l* > *t*: H_0–4 dB	For *l* ≤ 0,5*t*: H_0 + 6 dB For 0,5*t* < *l* ≤ t:H_0 For *l* > *t*: H_0– 4 dB	For *l* ≤ *t*: H_0 + 6 dB For *l* > *t*: H_0	For *l* ≤ 0,5*t*: H_0+10 dB For 0,5*t* < *l* ≤ *t* H_0 + 4 dB: For *l* > *t*: H_0
3 (rectangular notch)	H_0 – 14 dB	H_0 – 10 dB	For *l* ≤ *t*: H_0–4 dB For *l* > *t*: H_0–10 dB	–	For *l* ≤ *t*: H_0 For *l* >*t*: H_0–6 dB	–
4 (tandem technique)	H_0 – 22 dB	H_0 – 18 dB	–	For *l* ≤ 0,5*t*: H_0–8 dB For 0,5*t* < *l* ≤ *t*: H_0–14 dB For *l* > *t*: H_0–18 dB	–	For *l* ≤ 0,5*t*: H_0–4 dB For 0,5*t* < *l* ≤ *t*: H_0–10 dB For *l* > *t*: H_0–14 dB

Method for setting the reference level according to ISO 17640[1]	Evaluation level of sensitivity for Acceptance level[2]		Acceptance level 2 (AL 2) for thicknesses[2,3,4]		Acceptance level 3 (AL 3) for thicknesses[2,3,4]	
	2	3	8 mm ≤ *t* <15 mm	15 mm ≤ *t* <100 mm	8 mm ≤ *t* <15 mm	15 mm ≤ *t* < 100 mm
[1] Refer to 3.2.6.14 [2] H_0 — reference level according to ISO 17640 (refer to 3.2.6.13) [3] *l* — length of imperfection [4] *t* — thickness of base metal						

3.4.6.2 All imperfections, echosignal level of which exceeding the reference level of sensitivity, shall be assessed in accordance with the definition of the characteristics of ISO 23279:2017, Stage 3 in order to identify the planar (two-dimensional) imperfections.

3.4.6.3 UT Acceptance Levels apply to the examination of full penetration ferritic steel welds, with thickness from 8 mm to 100 mm. The nominal frequency of probes used shall be between 2 MHz and 5 MHz. Examination procedures for other type of welds, material, thicknesses above 100 mm and examination conditions shall be submitted to the consideration of the Register.

3.4.6.4 All the specified as per 3.4.6.2 planar (two-dimensional) imperfections are considered inadmissible and subject to be corrected.

3.4.6.5 All detected imperfections inadmissible for the specified accepted level on the ultrasonic testing results shall be removed and the location of corrections shall be tested again in accordance with 3.2.1.

3.4.7 Quality assessment of welded joints based on the results of the advanced non-destructive testing (ANDT).

3.4.7.1 General.

Quality assessment of welded joints in steel structures shall be carried out based on the quality levels in compliance with the relevant requirements of agreed international and national standards and shall include, but not be limited to, the following advanced non-destructive testing methods: phased array ultrasonic testing (PAUT), time of flight diffraction (TOFD), digital radiography (RT-D).

Where necessary, these testing methods shall apply in combination for ease of result assessment in compliance with the accepted criteria.

3.4.7.2 Quality assessment of welded joints based on the results of phased array ultrasonic testing (PAUT).

The applicable levels of defect assessment in connection with the established quality levels shall comply with ISO 19285:2017 or other standard agreed with the Register.

The relationship between the acceptance levels, testing levels and quality levels is given in Table 3.4.7.2.

Table 3.4.7.2

Quality levels according to ISO 5817:2014	**Testing levels according to ISO 13588:2019**	**Acceptance levels according to ISO 19285:2017**
C, D	A	3
B	B	2
Subject to approval	C	1
Special application	D	Subject to approval

3.4.7.3 Quality assessment of welded joints based on the results of time of flight diffraction (TOFD).

The applicable levels of defect assessment in connection with the established quality levels shall comply with ISO 15626:2018 or other standard agreed with the Register

The relationship between acceptance levels, testing levels and quality levels is given in Table 3.4.7.3.

Table 3.4.7.3

Quality levels according to ISO 5817:2014	**Testing levels according to ISO 10863:2011**	**Acceptance levels according to ISO 15626:2018**
B	C	1
C	At least B	2
D	At least A	3

3.4.7.4 Quality assessment of welded joints based on the results of digital radiography (RT-D).

The applicable levels of defect assessment in connection with the established quality levels shall comply with ISO 10675 or other standard agreed with the Register.

The relationship between acceptance levels, testing levels and quality levels is given in Table 3.4.7.4.

Table 3.4.7.4

Quality levels according to ISO 5817:2014 or ISO 10042:2018	**Testing techniques/level(class) according to ISO 17636-2:2013**	**Acceptance level according to ISO 10675-1:2016 and ISO 10675-2:2017**
B	B (class)	1
C	B* (class)	2
D	A (class)	3
* For circumferential weld testing, the minimum number of exposures may correspond to the requirements of ISO 17636-2:2013, class A		

3.5 ASSESSMENT OF WELDED JOINT QUALITY IN ALUMINIUM ALLOY HULL STRUCTURES

3.5.1 General.

3.5.1.1 Assessment of welded joint quality in aluminium alloy hull structures shall be carried out based on the quality levels in compliance with the relevant requirements of ISO 10042 or other agreed international and national standards.

3.5.1.2 Requirements for the quality levels that meet the requirements of ISO 10042 for hull structures of ships shall be agreed with the Register individually depending on the type of a ship and its size. In any case, an acceptable level of quality shall be at least "C" in accordance with ISO 10042 except for the size requirements for weld reinforcement during an external examination and measurements, which can be lowered to level "D" as agreed with the Register.

3.5.1.3 For specific non-destructive testing procedure acceptable levels of imperfection acceptance in accordance with the specified quality levels as per ISO 10042, as well as the requirements for the class and procedure of control are established by the requirements of the relevant international standards and shall be assigned in accordance with Table 3.5.1.3.

Table 3.5.1.3

Quality level in compliance with ISO 10042	Requirements for radiographic testing		Requirements for penetrant methods	
	Methods and class as per ISO 17636	Assessment level (quality grade) in compliance with ISO 10675-2	Methods and class as per ISO 3452	Assessment level (quality grade) in compliance with ISO 23277
B	B	1	Test Class (level) is not specified	2×
C	B[1]	2		2×
D	A	3		3×
[1] For circumferential piping welded joints minimum quantity of exposures (radiographs) can comply with the requirements for class A ISO 17636.				

3.5.1.4 Assessment of the welded joints quality within each level of assessment of imperfections shall be performed as per an alternative system of "fit-unfit" ("acceptance — non-acceptance") applying assessment criteria, according to 3.5.2, 3.5.3, 3.5.4.

3.5.2 Assessment of the welded joints quality by the visual testing and measurement results.

3.5.2.1 If otherwise is not agreed with the Register, assessment of the welded joints quality on the visual testing results shall be carried out in accordance with ISO 10042 (refer to Table 3.5.2.1) for the quality levels agreed with the Register.

Table 3.5.2.1

No.	Imperfection designation	Reference to ISO 6520	Specifications of imperfections and the weld dimensions	Limits for imperfections for quality levels ISO 10042			Remarks
				B	C	D	
1	Crack	100	—		Not permitted		–
2	Crater crack	104	l — length h — height	Not permitted		$l \le 0{,}4t$ or $l \le 0{,}4a$ $h \le 0{,}4t$ or $h \le 0{,}4a$	–
3	Surface pore 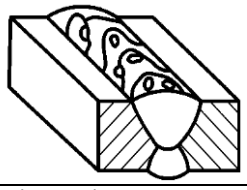	2017	d — maximum dimension for weld profile concavity: $0{,}5$ mm $\le t \le 3$ mm	$d \le 0{,}1t$ or $d \le 0{,}1a$	$d \le 0{,}2t$ or $d \le 0{,}2a$	$d \le 0{,}3t$ or $d \le 0{,}3a$	Clusters and lines on the weld surface are not permitted
			$t > 3$ mm	$d \le 0{,}2t$ or $d \le 0{,}2a$ but max. 1 mm	$d \le 0{,}3t$ or $d \le 0{,}3a$ but max. 1,5 mm	$d \le 0{,}4t$ or $d \le 0{,}4a$ but max. 3 mm	
4	End crater pipe 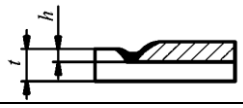	2025	h — crater height (cross sectional dimension of undercut)	Not permitted	$h \le 0{,}20t$, but max. 1,5 mm	$h \le 0{,}40t$, but max. 3 mm	For levels C and D may not be permitted under painting conditions

No.	Imperfection designation	Reference to ISO 6520	Specifications of imperfections and the weld dimensions	Limits for imperfections for quality levels ISO 10042			Remarks
				B	C	D	
5	Lack of fusion (surfaced) 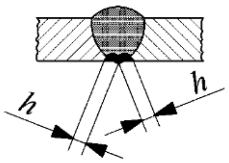	401	*h* — height *l* — length of a single imperfection	Not permitted	Not permitted	*h* ≤ 0,1*t* or *h* ≤ 0,1*a* but max. 3 mm *l* ≤ 25 mm	
6	Incomplete root penetration (for single sided butt welds) 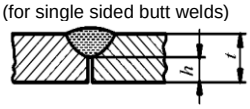	4021	*h* — maximum height *l* — maximum length of a single imperfection	Not permitted	Not permitted	*h* ≤ 0,20*t* but max. 2,0 mm *l* ≤ 25 mm Single non systematical imperfections may be permitted	For level D may not be permitted under painting conditions
7	Undercut: continuous						
	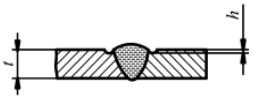	5011	*h* — maximum height	Not permitted	*h* ≤ 0,10*t* but max. 0,5 mm	*h* ≤ 0,20*t* but max. 1,0 mm	
	intermittent 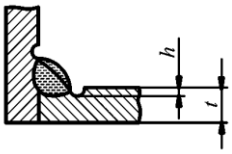	5012	*h* — maximum height *l* — length	*h* ≤ 0,10*t* but max. 0,5 mm *l* ≤ 25 mm	*h* ≤ 0,10*t* but max. 1 mm *l* ≤ mm	*h* ≤ 0,20*t* but max. 1,5 mm *l* ≤ 25 mm	
8	Strinkage grooves (undercuts on both sides of the weld) 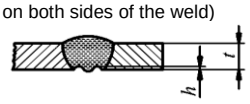	5013	*h* — maximum height *l* — maximum length of a single imperfection	*h* ≤ 0,05*t* but max. 0,5 mm *l* ≤ 25 mm	*h* ≤ 0,1*t* but max. 1 mm *l* ≤ 25 mm	*h* ≤ 0,2*t* but max. 1,5 mm *l* ≤ 25 mm	
9	Excess weld metal 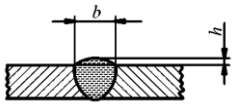	502	*h* — maximum reinforcement height *b* — breadth of reinforcement	*h* ≤ 1,5 mm + 0,1*b* but max. 6 mm	*h* ≤ 1,5 mm + 0,15*b* but max. 8 mm	*h* ≤ 1,5 mm + 0,2*b* but max. 10 mm	
10	Excessive convexity 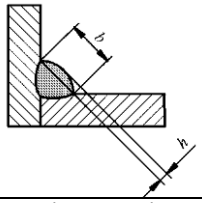	503	*h* — maximum convexity *b* — breadth of fillet weld	*h* ≤ 1,5 mm + 0,1*b* but max. 3 mm	*h* ≤ 1,5 mm+0,15*b* but max. 4 mm	*h* ≤ 1,5 mm + 0,3*b* but max. 5 mm	
11	Excessive penetration 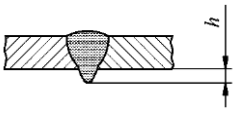	504	*h* — maximum penetration height *b* — breadth of penetration	*h* ≤ 3 mm	*h* ≤ 4 mm	*h* ≤ 5 mm	
12	Overlap 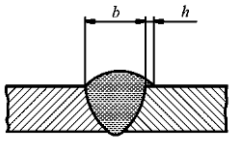	506	*h* — overlap height *l* — length of a single imperfection	Not permitted	Not permitted	*h* ≤ 0,2*t* *l* ≤ 25 mm	

No.	Imperfection designation	Reference to ISO 6520	Specifications of imperfections and the weld dimensions	Limits for imperfections for quality levels ISO 10042			Remarks
				B	C	D	
13	Linear misalignment between plates and caps of pipes: projected as symmetrical 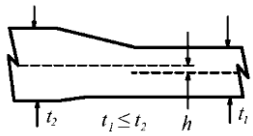	5071	*h* — dimension of linear misalignment: defined as misalignment of axes along the thickness plates	*h* ≤ 0,2*t* but max. 2 mm	*h* ≤ 0,3*t* but max. 4 mm	*h* ≤ 0,4*t* but max. 8 mm	
	projected as asymmetrical 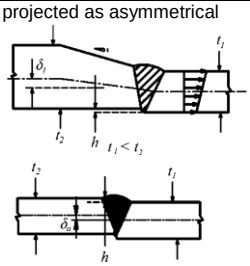		defined as deviation of external plate line	*h* ≤ 0,2*t* but max. 2 mm	*h* ≤ 0,3*t* but max. 4 mm	*h* ≤ 0,4*t* but max. 8 mm	
14	Linear misalignment between tubes (pipes) 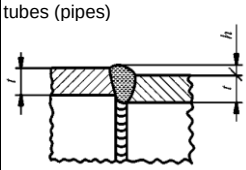	5072	*h* — height of linear misalignment defined as the deviation of the welded pipes external diameter *t* = min{ t_1 and t_2}	*h* ≤ 0,2*t* but max. 4 mm	*h* ≤ 0,3*t* but. 6 mm	*h* ≤ 0,4*t* but max. 10 mm	
15	Linear misalignment of cruciform joints: projected as symmetrical 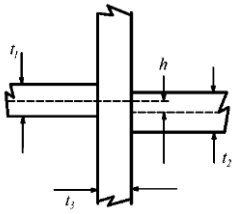		*h* — height of linear misalignment defined as deviation of axes along the thickness plates *t* = min{t_1, t_2 and t_3}	*h* ≤ 0,2*t*	*h* ≤ 0,30*t*	*h* ≤ 0,50*t*	
	projected as asymmetrical 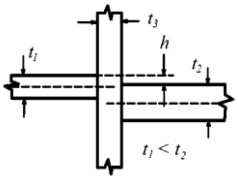		defined as deviation of common external line of plates *t* = min{*t*1, *t*2 and *t*3}	*h* ≤ 0,15*t*	*h* ≤ 0,30*t*	*h* ≤ 0,50*t*	
16	Sagging Incompletely filled groove	509 511	*h* — height of sagging or incompleteness of groove *l* — length of imperfection	*h* ≤ 0,05*t* but max. 0,5 mm *l* ≤ 25 mm	*h* ≤ 0,1*t* but max. 1 mm *l* ≤ 25 mm	*h* ≤ 0,2*t* but max. 2,0 mm *l* ≤ 25 mm	
17	Excessive asymmetry of fillet weld 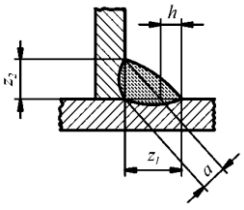	512	$h = z_1 - z_2$ — height of asymmetry (different leg lengths)	*h* ≤ 1,5 mm + 0,2*a*	*h* ≤ 2 mm + 0,25*a*	*h* ≤ 3 mm + 0,3*a*	

No.	Imperfection designation	Reference to ISO 6520	Specifications of imperfections and the weld dimensions	Limits for imperfections for quality levels ISO 10042			Remarks
				B	C	D	
18	Root concavity 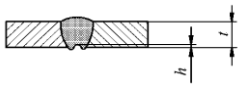	515	*h* — height of root concavity *l* — length of imperfection	*h* ≤ 0,05*t* but max. 0,5 mm *l* ≤ 25 mm	*h* ≤ 0,1*t* but max.1 mm *l* ≤ 25 mm	*h* ≤ 0,2*t* but max.2,0 mm *l* ≤ 25 mm	
19	Insufficient throat thickness 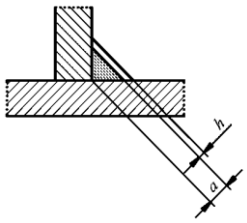	5213	*h* — height if insufficience (reduction from nominal dimension) of fillet weld thickness *a* *l* — length of imperfection	*h* ≤ 0,1*a* but max. 1 mm	*h* ≤ 0,2*a* but max. 1,5 mm	*h* ≤ 0,3*a* but max. 2 mm	
				l ≤ 25 mm	*l* ≤ 25 mm	*l* ≤ 25 mm	
20	Incorrect root gap for fillet weld 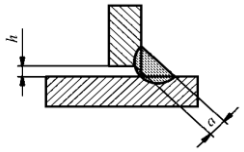	617	*h* — height of root gap of single sided weld *a* — thickness of fillet weld	*h* ≤ 0,5 mm + 0,1*a* but max. 3 mm	*h* ≤ 0,5 mm + 0,15*a* but max. 4 mm	*h* ≤ 1 mm + 0,2*a* but max. 5 mm	On agreement with the Register gaps exceeding the appropriate limit may be compensated for by a corresponding increase in the throat

3.5.2.2 All imperfections detected on the visual testing and measurement results shall be removed and the location of corrections shall be tested again in compliance with 3.2.1.

3.5.2.3 On the visual testing and measurement results the welded joints shall be considered fit/accepted if inadmissible imperfections are not detected for an acceptable level listed in Table 3.5.2.1.

3.5.3 Assessment of the welded joints quality by the dye penetrant testing results.

3.5.3.1 If otherwise is not agreed with the Register, assessment of the welded joints quality on the dye penetrant testing results shall be carried out in accordance with ISO 23277 (refer to Table 3.5.3.1) for the quality levels agreed with the Register.

Table 3.5.3.1

Type of indicator	Assessment level (quality grade) in compliance with ISO 23277[1]		
	1	2	3
Linear	*l* ≤ 2 mm	*l* ≤ 4 mm	*l* ≤ 8 mm
l — indicator bead length			
Non-linear	*d* ≤ 4 mm	*d* ≤ 6 mm	*d* ≤ 8 mm
d size of a major axis of the indicator bead			

[1] Acceptance levels 2 and 3 may include an index «x» designating that all the linear indicator beads shall be assessed as per level 1.
[2] A linear indicator bead is an indicator bead with its length exceeding the width of more than three times.
[3] Non-linear indicator bead is an indicator bead with its length equal to or less than three widths.

3.5.3.2 To reduce the dimensions or remove the imperfections that caused inadmissible indicator beads (indications), local grinding or cleaning can be used if permitted as per the production specifications for a particular product. Location of corrections shall be subject to re-inspection and assessment in accordance with the specification used for the initial testing as per 3.2.1.

3.5.3.3 On the dye penetrant testing results the welded joints shall be considered fit/accepted if inadmissible imperfections are not detected for an acceptable level listed in Table 3.5.3.1.

3.5.4 Assessment of the welded joints quality by the radiographic testing results.

3.5.4.1 At the radiographic testing assessment of the welded joints quality shall be carried out with the interpretation of the images on radiographs for the following types of internal imperfections:

pores;
solid (oxide) inclusions;
metal tungsten inclusions;
poor fusion;
lack of fusion;
cracks.

Surfaced imperfections in welds shall be assessed in compliance with 3.5.2.1.

3.5.4.2 For the dimensions of the welded joints imperfections under radiographic control shall be taken dimensions of their images on radiographs in accordance with the following requirements.

The following are accepted for the dimensions of the pores, slag or tungsten inclusions:

for spherical pores and inclusions their diameter *d*, as measured by the longest axis;

for extended inclusions their length *l* and the width *h.*

For the dimensions of lack of fusion, incomplete penetration and cracks their length *l* is accepted.

If the distance between similar imperfections inline is less than the size of the smallest imperfection, such imperfections shall be one extended imperfection. Dimensions of such an imperfection shall be defined as the distance measured by the outermost edges of the group imperfections.

If the distance between arranged parallel uniform extended imperfections is less than 3 times the width of the smallest imperfection, these imperfections shall be considered as an extended imperfection. Dimensions of such an imperfection shall be defined as the distance measured by the outermost edges of the group imperfections.

If more than one pore is located within the circle of a diameter equal to 3 times a pore diameter, such imperfections are considered group porosity or pore accumulation (cluster). For the cluster size the distance measured at the outermost edges of each other imperfections in the cluster shall be taken.

If the distance between two and more in-line uniform imperfections of one but not more than three extensions (diameter or length) of the smallest imperfections, those imperfections are called a line. For the inclusion line size the length measured at the outermost edges of each other imperfections in the line shall be taken.

3.5.4.3 If otherwise is not agreed with the Register, assessment of the welded joints quality on the radiographic testing results shall be carried out in accordance with ISO 10675-2 (refer to Table 3.5.4.3) for the quality levels agreed with the Register.

Table 3.5.4.3

No.	Imperfection designation	Reference to ISO 6520-1	Specifications of imperfections	Limits for imperfection for quality levels		
				1	2[1]	3[1]
1	Crack	100	–	Not permitted	Not permitted	Not permitted
2*a*	Gas pore	2011	*d* — maximum pore diameter	$d \le 0{,}2s$ but max. 4 mm	$d \le 0{,}3s$ but max. 5 mm	$d \le 0{,}4s$ but max. 6 mm
2*b*	Uniformly distributed porosity Material thickness 0,5 mm ≤ *s* ≤ 3 mm	2012	*A* — the sum of the different pore areas related to the evaluation area $Wp \times L$	$A \le 1$ % L = 100 mm	$A \le 2$% L = 100 mm	$A \le 6$% L = 100 mm
2*c*	Uniformly distributed porosity Material thickness 3 mm < *s* ≤ 12 mm	2012	*A* — the sum of the different pore areas related to the evaluation area $Wp \times L$	$A \le 2$% L = 100 mm	$A \le 4$ % L = 100 mm	$A \le 10$ % L = 100 mm
2*d*	Uniformly distributed porosity Material thickness 12 mm < *s* ≤ 30 mm	2012	*A* — the sum of the different pore areas related to the evaluation area $Wp \times L$	$A \le 3$ % L = 100 mm	$A \le 6$ % L = 100 mm	$A \le 15$ % L = 100 mm

No.	Imperfection designation	Reference to ISO 6520-1	Specifications of imperfections	Limits for imperfection for quality levels		
				1	2[1]	3[1]
2*e*	Uniformly distributed porosity Material thickness *s* > 30mm	2012	*A* — the sum of the different pore areas related to the evaluation area $Wp \times L$	*A* ≤ 4 % *L* = 100 mm	*A* ≤ 8 % *L* = 100 mm	*A* ≤ 20 % *L* = 100 mm
3	Clustered (localized) porosity	2013	*dA* — maximum diameter of the clustered porosity	*dA* ≤ 15 mm or *dA*, max ≤ *Wp*/2	*dA* ≤ 20 mm or *dA*, max ≤ *W*p	*dA* ≤ 25 mm or *dA*, max ≤ *W*p
4	Linear porosity	2014	*l* — linear porosity length	Not permitted	Not permitted	*l* ≤ 25 mm
5	Elongated cavity and pipes (wormholes)	2015 2016	*l* — imperfection length	*l* ≤ 0,2*s* but max. 3 мм	*l* ≤ 0,3*s* but max. 4 mm	*l* ≤ 0,4*s* but max. 6 mm
6	Oxide inclusions	303	*l* — length of an inclusion *s* — nominal thickness of the butt weld	*l* ≤ 0,2*s* but max. 3 mm	l*l* ≤ 0,5*s* but max. 5 mm	*l* ≤ *s* but max. 10 mm
7	Tungstan inclusions	3041	*l* — imperfection length	*l* ≤ 0,2*s* but max. 3 mm	*l* ≤ 0,3*s* but max. 4 mm	*l* ≤ 0,4*s* but max. 6 mm
8[2]	Lack of fusion	401	*l* — imperfection length	Not permitted	Not permitted	Permitted but only intermittent and not surfaced *l* ≤ 25 mm, *L* = 100 mm
9[2]	Lack of penetration	402	*l* — imperfection length	Not permitted	Permitted as applied to the double-sided welded joint and not surfaced *l* ≤ 25 mm, *L* = 100 mm	*l* < 25 mm, *L* = 100 mm

Symbols:
L — any (with imperfection maximum density) 100 mm weld length;
s — nominal thickness of the butt weld;
t — material thickness;
Wp — weld width.
[1] Quality levels 2 and 3 can have index «» which designates all imperfections above 25 mm and are not permitted.
[2] If the weld length is under 100mm the maximum imperfection length shall not be above 25 % of that length.

3.5.4.4 All detected imperfections inadmissible for the specified accepted level on the radiographic testing and measurement results shall be removed and the location of corrections shall be tested again in compliance with 3.2.1.

3.5.5 Assessment of the quality of friction stir welded joints of structures made of aluminium alloys shall be carried out in accordance with ISO 25239-5:2011.

All inadmissible imperfections detected on NDT results shall be removed and the location of corrections shall be tested again in compliance with the applicable provisions of 3.2.1.

4 WELDING CONSUMABLES

4.1 GENERAL

4.1.1 Application.

4.1.1.1 The welding consumables intended for welding the structures specified in 1.1.1 shall be tested and approved by the Register. Based on the results of manufacturer survey and testing of welding consumables, the Register issues a Certificate of Approval for Welding Consumables, which is drawn up by the manufacturer's name and is subject to annual endorsement. In case of single approval of welding consumable the Register shall survey single batches and issue the Certificate (C) drawn up by the applicant company's name.

4.1.1.2 The requirements of this Section apply to the initial approval and annual endorsement of the Certificate of Approval for Welding Consumables, as well as the Certificate (C), regarding the welding consumables used for welding the normal, higher and high strength hull structural steels, corrosionresistant (stainless) steels and aluminium alloys.

This Section specifies the requirements for approval of the following categories of welding consumables:

covered electrodes for manual arc welding, and also for gravity and contact welding;

"wire — flux" combinations for submerged arc welding;

"wire — gas" combinations for gas-shielded metal arc welding (including tungsten inert gas welding — TIG, as well as plasma arc welding);

flux-cored wire with or without shielding gas for metal arc welding;

welding consumables for electrogas and electroslag welding.

4.1.2 Grading and designation.

4.1.2.1 General explanations.

Welding consumables are classified depending on their purpose, and also on the mechanical and chemical properties of the filler metal. Different grades or types of consumables may be used for specific applications or materials on a case-by-case basis.

The welding consumables covered by the requirements of this Section shall be classified using the basic and additional symbols given in 4.1.2.2 to 4.1.2.6.

4.1.2.2 Welding consumables for welding normal and higher strength hull structural steels.

The welding consumables intended for welding the normal and higher strength hull structural steels, which meet the requirements of 3.2, Part XIII "Materials", are divided into grades depending on the minimum yield stress of deposited metal or weld metal, and the impact test temperatures with the assignment of the basic symbols according to Table 4.1.2.2.

Table 4.1.2.2

Strength level of deposited metal or weld metal, R_{eH}, MPa, min.	Impact test temperature of deposited metal and weld metal specimens, °C				
	+20	0	–20	–40	–60
305	1	2	3	4	–
375	1Y	2Y	3Y	4Y	5Y
400	–	2Y40	3Y40	4Y40	5Y40

4.1.2.3 Welding consumables for high strength steels.

The welding consumables intended for welding the high strength steels, which meet the requirements of 3.13, Part XIII "Materials", are divided into grades depending on the minimum yield stress of deposited metal and the impact test temperatures of weld metal and deposited metal with the assignment of the basic symbols according to Table 4.1.2.3.

Table 4.1.2.3

Strength level of deposited metal, $R_{p0,2}$ or R_{eH} MPa, min.	Impact test temperature for deposited metal and weld metal, °C				
	+20	0	–20	–40	–60
420	–	–	3Y42	4Y42	5Y42
460			3Y46	4Y46	5Y46
500			3Y50	4Y50	5Y50
550			3Y55	4Y55	5Y55
620			3Y62	4Y62	5Y62
690			3Y69	4Y69	5Y69
890			3Y89	4Y89	–
960			3Y96	4Y96	–

4.1.2.4 Welding consumables for corrosion-resistant (stainless) steels.

The welding consumables intended for welding the corrosion-resistant (stainless) steels, which meet the requirements of 3.16, Part XIII "Materials", are divided into grades with the assignment of symbols M-1, MF-2, F-3, AM-4, A-5, A-6, A-7ss, AF-8dup, A-9sp and A-10sp according to the provisions in 4.8.1.2 considering the structure and composition of the steels to be welded. Additionally to the designation of the welding consumable grade, the symbol of a typical chemical composition (brand) of deposited metal shall be indicated similarly to 3.16.1.1, Part XIII "Materials" for the base metal (refer also to 4.8.1.3).

4.1.2.5 Welding consumables for welding aluminium alloys.

The welding consumables intended for welding aluminium alloys, which meet the requirements of Section 5, Part XIII "Materials", are divided into grades A, B, C and D (for international alloys) and 1, 2, 3 and 4 (for national alloys) in accordance with the provisions in 4.9.1.3 depending on the composition and strength level of the base metal used for approval tests. Initial letter W or R is placed before the grade symbol to designate the product type: wire or rod, respectively.

4.1.2.6 Additional symbols.

The following additional symbols, as applied to the welding consumables intended for welding the normal and higher strength hull structural steels, and also high strength steels, are used:

H15, H10 and H5 for controlled diffusible hydrogen content in the deposited metal as per 4.2.3;

T — for approval of welding consumables for two-run welding technique, which provides welding in single run on each weld side without an additional back welding and gouging of the weld root;

M — for approval of welding consumables for multirun welding technique;

TM — for approval of welding consumables for two-run and multi-run welding technique;

S — for approval of welding consumables for semiautomatic welding technique;

SM — for approval of welding consumables for semiautomatic and automatic multi-run welding technique;

V — for approval of welding consumables for vertical welding with the forced weld formation using the electrogas and electroslag welding technique;

PW — for approval of welding consumables supplied with the confirmed mechanical properties of weld metal after heat treatment for stress relief.

4.1.3 Approval procedure.

4.1.3.1 Request for approval.

To approve welding consumables, a manufacturer shall submit to the Register a request for approval together with enclosed documents and specific information indicated in 4.3.1.3, 4.4.1.3, 4.5.1.5 and 4.6.1.4 relevant to the particular types of welding consumables.

4.1.3.2 Quality of manufacturing.

The manufacturer's production facilities, method of production and quality control of welding consumables shall be such as to ensure reasonable uniformity in manufacture.

The manufacturer shall ascertain this uniformity by means of analysis and systematic testing on each production batch.

In general, the welding consumables shall maintain the manufacturer-specified and secured characteristics (stated in the requirements for products acceptance) for a period of time of at least six months after the date of delivery, when properly stored and kept in the original packaging.

The consumables shall be supplied so packaged as to ensure compliance with the above requirement; the packaging shall be sufficiently strong to resist the usual transportation and handling operations.

The manufacturer shall mark (stamp or seal) each container or bag, as applicable, the markings which are necessary to trace back each production.

4.1.3.3 Surveys and tests.

The welding consumables are approved subject to satisfactory results of the following:

survey of the production potential and the quality assurance system of the manufacturer of welding consumables by the RS surveyor;

tests of welding consumables to the extent of the initial approval as per the requirements of 4.3 — 4.9 witnessed by the RS surveyor directly at the manufacturer's or in the independent testing center recognized by the Register.

The scope of survey of the welding consumables manufacturers at the initial approval is established by the requirements of 5.2, Part III "Technical Supervision during Manufacture of Materials" of the Rules for Technical Supervision during Construction of Ships and Manufacture of Materials and Products for Ships.

The approval tests required shall be performed on samples of consumables that are representative of the production. Sampling procedures shall be agreed with the RS surveyor.

In general, the approval tests consist of the following control checks and tests:

sampling control of the quality of product manufacture together with checking the welding and technological properties usually carried out during survey of production;

determination of the mechanical properties and chemical composition of deposited metal if the latter is specified by the technical documentation on manufacture and supply of products (coated electrodes, flux-cored wire);

determination of the mechanical properties of the butt welded joint metal;

determination of the content of diffusible hydrogen in deposited metal for the welding consumables with the relevant additional symbols (refer to 4.2.3.1);

determination, where necessary, of the weld metal and welded joint susceptibility to hot cracking;

special types of tests relevant to the welding consumables for welding corrosion-resistant (stainless) steels according to 4.8.

In order to approve the welding consumables and welding procedures, the requirements to which are not specified in the RS Rules, the scope of testing may comply with the agreed standards.

4.1.4 Issuance of the Certificate.

4.1.4.1 Upon satisfactory completion of the survey and tests required in this Section to the extent of the initial approval, the Register issues to a manufacturer the Certificate of Approval for Welding Consumables (COCM) or the Certificate (C) of a set form. After issuance of the Certificate of Approval for Welding Consumables the manufacturer shall draw up the MC document for the batch stipulating the compliance of the consumable with RS requirements. MC content shall meet the requirements of 5.4, Part I "General Regulations for Technical Supervision" of the Rules for Technical Supervision during Construction of Ships and Manufacture of Materials and Products for Ships. The approved welding consumables, having the Certificate of Approval for Welding Consumables, and manufacturers shall be registered and entered in the special list located at the Register website (http://www.rs-class.org/en → "Online

information" → "Approved materials and products, service suppliers, companies" → "Approved materials and products").

4.1.4.2 Upon satisfactory completion of tests, the Register assigns one grade to the relevant welding consumable requested by the manufacturer. In accordance with the requirements of 2.2.4.4, at the manufacturer's request, the Register may assign to the welding consumable additional grades within one temperature value of impact test upon receiving satisfactory test results. In this case preparation and welding of test assemblies shall be carried out in accordance with the requirements of 4.2.1.

4.1.5 Annual inspections and tests.

4.1.5.1 The Certificate of Approval for Welding Consumables is issued for a period of up to five years and is subject to annual re-approval surveys and tests carried out under the Register technical supervision. The re-approval surveys and tests shall be carried out at a yearly interval. The tests shall be completed by the end of each calendar year at the latest.

The scope of annual re-approval surveys of the welding consumables manufacturers is established by 5.2, Part III "Technical Supervision during Manufacture of Materials" of the Rules for the Technical Supervision during Construction of Ships and Manufacture of Materials and Products for Ships.

The scope of annual re-approval surveys of the welding consumables is specified for particular types of the welding consumables and welding procedures as per 4.3.8.1, 4.4.4.1, 4.5.5.1, 4.6.3.1, 4.7.5, 4.8.5 and 4.9.4.

4.1.5.2 In case re-approval tests show unsatisfactory results, the grade of welding consumables shall be lowered according to the actual values of the properties obtained. The approval may be resumed not before three months' period after the manufacturer has taken measures for production quality stabilization and performance of the tests for welding consumables upgrading in the established order.

4.1.5.3 Welding consumables approved by the Register on the basis of the test results conducted at the user's during the welding procedure approval shall be subjected to re-approval tests in the normal way either at the manufacturer's or, on its authorization, at the user's works.

4.1.5.4 Where conditions of re-approval are not met, the validity of the Certificate of Approval for Welding Consumables is ceased, and the welding consumables indicated therein may no longer be used for fabrication of the structures subject to survey by the Register.

Upon expiry the Certificate of Approval for Welding Consumables may be extended by the Register on the basis of the tests generally equivalent to the re-approval tests. Where the Certificate ceases to be valid ahead of time on the manufacturer's initiative, its extension requires testing to the extent agreed with the Register in each particular case.

In case the manufacturer has and maintains the quality system recognized by the Register, the Surveyor to the Register may not be present during the tests, provided they are conducted by the manufacturer in compliance with the quality control system in force at the manufacturer's and the test results are checked.

N o t e . The welding consumables manufacturer's quality system approval (certification) documents issued by the classification societies — IACS members, as well as by other competent bodies authorized in accordance with the national legislation or international agreements may be recognized by the Register after their review.

4.1.6 Manufacturer's responsibilities.

With the Register approval, the manufacturer assumes responsibility for ensuring that during fabrication the composition and properties of the products will conform to those of the tested welding consumables.

The manufacturer shall state in their catalogues and on packaging (label, tag) the information on the Register approval by indicating "Approved by the Register, ..." and specifying the grade of the welding consumable according to the Certificate of Approval for Welding

Consumables. Besides, the information on storage conditions and use of welding consumables shall be indicated in the catalogue and on packaging.

The manufacturer shall keep up-to-date records of the manufacture of the approved consumables, including details of the history of the single productions and results of associated tests.

The Register shall have free access to these records at all times.

The manufacturer is responsible for reporting to the Register any major modifications introduced in the production procedure for their further agreement with the Register.

The manufacturer takes on responsibility for full compliance with the all the requirements stated by the Register in connection with granting and renewing the Certificate of Approval for Welding Consumables.

4.1.7 Rights of the Register.

During validity of the Certificate of Approval for Welding Consumables the Register may require from the manufacturer to confirm the stable quality of raw material and finished product composition and properties, as well as adherence to the production process.

Where the production process, quality control and acceptance procedures change as well as where suppliers of raw materials and appropriate specifications, which may impair the quality of the welding consumables produced by the manufacturer, are substituted, the Register may require additional tests to be conducted by the manufacturer.

Where proofs exist of a welding consumable unsatisfactory quality, which have been obtained during its acceptance for fabrication of the structures subject to survey by the Register, the Certificate of Approval for Welding Consumables loses its validity and shall be withdrawn. The Register approval may be resumed only provided the manufacturer submits adequate proofs showing that factors causing the production poor quality have been eliminated and new re-approval tests have been carried out.

4.1.8 Special cases of approval of welding consumables.

4.1.8.1 Referred to special cases of approval of welding consumable are: upgrading/uprating of welding consumables at manufacturer's request;

approval of welding consumables for compliance with international or national standards;

approval of welding consumables for compliance with the properties guaranteed by the manufacturer, which exceed or supplement the requirements of the Register Rules or appropriate standards;

approval of welding consumables fabricated under license or manufacturer's subsidiary companies;

approval of welding consumables based on the tests carried out in the course of approval by the Register of the welding procedures of the company using the welding consumables;

approval of welding consumables based on the results of the tests carried out by other classification societies or technical supervision authorities;

single permits for use of welding consumables having an approval of other classification societies or technical supervision authorities.

4.1.8.2 Tests on upgrading of welding consumables are carried out at the manufacturer's request and are generally combined with annual re-approval tests of the welding consumables. The scope of the tests for upgrading of welding consumables shall comply with the requirements in 4.3.8.2, 4.4.4.2, 4.5.5.2 and 4.6.3.2 for the relevant types of welding consumables Upon satisfactory completion of tests, the new Certificate of Approval for Welding Consumables is issued for the grade specified by the manufacturer. Herewith the validity of the previously issued Certificate is ceased, and the grades specified therein become void.

4.1.8.3 Welding consumables are generally approved by the Register for compliance with international or national standards in the following cases:

at the manufacturer's request;

in cases where requirements for welding consumables are not specially stated in the Register Rules.

In such cases, the scope and procedure of re-approval tests of the welding consumables shall meet the requirements of the appropriate standards.

4.1.8.4 Where welding consumables are approved by the Register for compliance with properties guaranteed by the manufacturer, which supplement or exceed the requirements of the Register Rules and/or appropriate standards, an adequate entry shall be made in the Certificate of Approval for Welding Consumables. The properties shall be confirmed by the test results.

4.1.8.5 When consumables of the same brand are manufactured in different workshops belonging to the same manufacturer, the complete series of tests is generally performed in one workshop only. In the other workshops (subsidiaries), upon agreement with the Register, a reduced test program equivalent to annual re-approval tests is permitted.

The manufacturer shall submit the data to the Register, which confirm that materials used in terms of their composition, fabrication process and welding characteristics are identical to those used in the main works.

However, shall there be any doubt, complete test series may be required by the Register.

The above requirements are also applicable to all manufacturers producing welding consumables under license.

If a unique powder flux is combined with different wires coming from several factories belonging to the same firm for a combination "wire — flux", the flux may be approved by the Register on the basis of testing the wire delivered by one of the suppliers, if all the suppliers produce and deliver the wires according to the same specification.

4.1.8.6 For approval of welding consumables on the basis of the tests of the welding procedures (refer to Section 6) the user of the welding consumables shall be authorized by the manufacturer to perform such works (combination of tests).

In this case the welding procedure approval test programme shall be extended and shall include the tests for determination of the deposited metal properties.

After receiving satisfactory test results, the Certificate in f. 6.5.30 for the particular batch is issued.

4.1.8.7 Where welding materials have approvals from other classification societies, the scope of tests to obtain the Register approval may be reduced to the annual programme required for the confirmation of the Certificate of Approval for Welding Consumables.

In such case, a copy of the detailed report on the tests performed shall be appended to the request for obtaining the Register approval.

The scope and results of the tests shall comply with the requirements of this Part.

4.1.8.8 The Register may issue a single permit for use of welding consumables that have been approved by other classification societies, but do not have the Certificate of Approval for Welding Consumables issued by the Register. Such permit is limited:

by the scope of the consumables used;

by use;

by time of use.

The Register reserves the right to require check tests of the welding consumables at the user's within the scope of tests for determination of the deposited metal properties, the results of which are presented in the form of the test report certified by the Register.

After receiving satisfactory test results, the Certificate in f. 6.5.30 for the particular batch is issued.

4.2 GENERAL REQUIREMENTS FOR WELDING OF TEST ASSEMBLIES AND TESTS

4.2.1 Preparation and welding of test assemblies.

4.2.1.1 Base metal.

The base metal used for the test assemblies shall be of the steel grade appropriate to the welding consumables grade as specified in this Section.

For the preparation of all weld metal test assemblies any grade of structural steel may be used. When the chemical composition of welded metal is substantially different from the base metal, an overlay of side walls and backing strip may be carried out, as deemed necessary.

For the preparation of butt and tee assemblies, steel grades shall be chosen depending on the grade of welding consumables in compliance with the requirements of this Section.

If the welding consumable is intended for welding the steel of different grades, the butt assemblies shall be made of the highest grade steel.

The edge preparation shall be performed either by mechanical machining or by gas cutting with subsequent dressing with abrasive tools.

4.2.1.2 Welding conditions and type of current.

Welding conditions used for manufacture of test assemblies (amperage, voltage, travel speed, type of current and electrodes) shall be within the range recommended by the manufacturer for normal good welding practice.

Where it is stated that welding consumables are suitable for both alternating and direct current, alternating current shall be used for welding the test assemblies for mechanical tests. When samples for checking the operating characteristics of welding consumables are required, both types of current shall be generally used. When samples for hot cracking tests are required, direct current shall be used.

Type of current is identified with the following symbols and their combinations:

AC — alternating current;

DC + — direct current electrode positive;

DC – — direct current electrode negative;

DC ± — direct current electrodes positive and negative.

Post-weld heat treatment of the test assemblies is not allowed, where the consumables are approved for the as-welded condition only.

4.2.2 Mechanical tests.

4.2.2.1 Tensile tests:

.1 longitudinal cylindrical test specimens for tensile test.

For deposited metal test, the longitudinal cylindrical proportional test specimens shall be used according to Fig. 2.2.2.3 *a*), Part XIII "Materials" with dimensions: d = 10 mm, L_0 = 50 mm, L_c = 60 mm and $R \geq 5$ mm.

The longitudinal axis of the test specimen shall coincide with the centre of the weld and:

the mid-thickness of the weld in the deposited metal test assemblies made following the multi-run procedure; the mid-thickness of the 2nd run metal in the two-run butt welded assemblies.

The use of the fivefold longitudinal cylindrical test specimens of other diameters (more or less than 10 mm) is allowed according to 2.2.2.3, Part XIII "Materials".

The specimens may be heated to a temperature not exceeding 250 °C for 16 h for hydrogen removal prior to testing.

The yield stress, tensile strength and elongation shall be determined for each specimen, entered in a test report and shall meet the requirements established for specific grade of the welding consumable. The value of reduction in area shall also be determined and reported for information;

.2 transverse flat tensile test specimens.

For testing a butt welded joint, the transverse flat tensile test specimens with dimensions according to Fig. 4.2.2.1 and cut out perpendicularly to the longitudinal axis of the weld shall be

used. The upper and lower surfaces of the weld shall be filed, ground or machined flush with the surface of the plate.

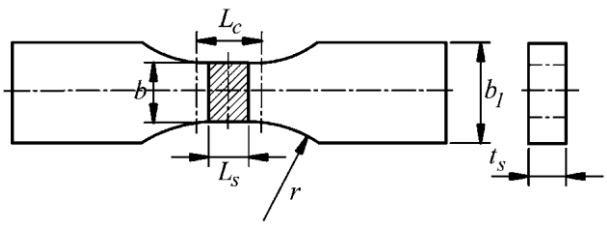

Fig. 4.2.2.1:
L_s — greatest weld width after treatment (weld top);
$L_c = L_s + 60$ mm — parallel test length;
t_s — thickness of specimen with weld reinforcement removed;
$b = 25$ mm — width of the parallel test length;
$b_1 = b + 12$ mm — width of the specimen gripping part;
$r \geq 25$ mm — transition radius

The tensile strength and fracture position shall be determined for each specimen, reported and comply with the requirements specified for specific grade of the welding consumable.

4.2.2.2 Bend tests:

.1 transverse test specimens for weld root and face bend test.

For testing a butt welded joint, the transverse bend test specimens shall be made according to Fig. 2.2.5.1, Part XIII "Materials" and cut out perpendicularly to the longitudinal axis of the weld. The upper and lower surfaces of the weld shall be filed, ground or machined flush with the surface of the plate. The specimen corners in tension may be rounded to a radius not exceeding 2 mm.

If the test procedure allows for the bending of test specimen round the mandrel, then the test specimen length may exceed 11*a*.

While tensile testing the transverse specimens, their weld face and root, the specimen dimensions shall be as follows: $a_0 = t$ where *t* — metal plate thickness of the butt weld assembly and $b_0 = 30$ mm.

If the plate thickness (a_0) exceeds 25 mm, it may be reduced to this size by machining on the compression side of the test specimen.

The bend test specimens are tested in pairs: one specimen at a time for tensioning the weld root and face for the multi-run procedure or for tensioning on the side of the 1st and 2nd runs for the two-run procedure;

.2 transverse side bend test specimens.

The transverse side bend test specimens with dimensions: a_0 = 10 mm and b_0 = *t* where *t* — metal plate thickness of the butt weld test assembly shall be usually used in addition to or in lieu of weld root and face tensioning for approval of "wire-gas" combinations, and also for approval of electrogas and electroslag welding. In the latter case at the plate thickness *t* ≥ 40 mm it is allowed to divide the specimen in two parts of the width b_0 ≥ 20 mm;

.3 longitudinal bend test specimens.

The longitudinal bend test specimens shall be usually used in lieu of transverse specimens for approval of the welding consumables of grades A-9sp and A-10sp intended for welding heterogeneous joints according to 4.8.4.1;

.4 requirements for test procedure.

Bend test results are considered satisfactory, when after bending through an angle of 120°, no cracks appear on the specimen surface being in tension. However, superficial cracks found on the specimen surface or open weld defects not exceeding 3 mm long shall be disregarded. The mandrel diameter is determined by the welding consumables grade and, for the materials

intended for welding normal and higher strength hull structural steels is equal to three times the test specimen thickness.

4.2.2.3 Impact test.

The impact energy of the deposited metal and butt weld metal shall be determined on V-notch specimens meeting the requirements of 2.2.3, Part XIII "Materials".

The sketch for cutting out the specimens from the test assemblies of the deposited metal and butt welded joint for impact testing shall allow positioning their longitudinal axis perpendicularly to the longitudinal axis of the weld and the fulfillment of the following requirements:

for deposited metal and butt welded test assemblies with multi-run technique, the specimens shall be taken at mid-thickness of the weld;

for butt welded test assemblies with two-run technique, the specimens shall be taken at a distance not exceeding 2 mm below the surface on the 2nd run side;

for electrogas and electroslag welded test assemblies, the specimens shall be taken from a butt welded test assembly at a distance not exceeding 2 mm below the surface.

The notch shall be cut in the face of the specimen perpendicular to the surface of the plate and to be positioned in the centre of the weld, and for electrogas and electroslag welding, an additional set of specimens with the notch at 2 mm from the fusion line in the weld metal shall be taken.

A set of three specimens shall be tested. The test temperature and the average impact energy shall meet the requirements specified for specific grade of welding consumables. The average impact energy for one of the specimens tested may be lower than required provided it is not lower than 70 % of this value.

4.2.3 Tests for checking diffusible hydrogen content in deposited metal.

4.2.3.1 The tests for checking diffusible hydrogen content in the deposited metal shall be carried out relative to the covered electrodes and flux-cored wire of the following grades:

2, 3 and 4, if applicable, (welding consumables may be classified according to 4.2.3.4) in accordance with the application of the manufacturer;

2Y, 2Y40, 3Y, 3Y40, 4Y, 4Y40, as well as 5Y and 5Y40;

3Y (42/96), 4Y (42/96) and 5Y (42/69).

The requirements to conducting the tests and classification of the welding consumables depending on the hydrogen content, according to 4.2.3.4, are also applicable for approval of the "wire — flux" combinations intended for welding:

high strength steels (refer to 4.7.4);

higher strength steels relative to manufacture of MODU and FOP structures (refer to 2.5.4.3, Part XIII "Materials" of the Rules for the Classification, Construction and Equipment of Mobile Offshore Drilling Units (MODU) and Fixed Offshore Platforms (FOP).

Relative to the combination of "solid wire — gas" it is not necessary to conduct the tests and classification of welding consumables with respect to the diffusible hydrogen content according to 4.2.3.4.

4.2.3.2 The following methods may be used to determine the content of diffusible hydrogen:

.1 the so-called mercury method standardized by ISO 3690 and considered as the reference method, which requires degassing of the specimens in the mercury environment at the atmospheric pressure and at room temperature. The method is called "mercury" due to the sealing and manometer type fluid. The vacuum system used for the mercury method is used to prepare the installation for measurements as well as for preliminary drying (degassing) surface of the specimen;

.2 methods standardized by ISO 3690 and based on degassing of the specimens in an inert carrier environment with the use of the thermal conductivity detectors (TCD) as instruments. These methods are also referred to as gas chromatographic because of the name of the equipment used to measure the amount of the precipitated hydrogen;

.3 vacuum methods based on degassing the specimens in vacuum at room temperature and providing results comparable to ISO 3690 method (for example, method 2 according to GOST 23338). The amount of the precipitated gas can be determined by a liquid manometer or other types of manometers providing the required accuracy in the used measurement range;

.4 methods based on degassing the specimens and collecting the precipitated hydrogen in the glycerine environment at the normal pressure and temperature of 45 °C. The selected test temperature is determined by viscosity-vs-temperature properties of glycerine as 45 °C is the minimum temperature when free bubble can float up and build up a regular shape meniscus in the manometer tube used for gas volume measurement.

4.2.3.3 Determination of the content of diffusible hydrogen with the methods listed in 4.2.3.2 shall be carried out according to the requirements for the equipment, preparation to tests, performing the tests and processing test results as specified in 5.4.6, Part III "Technical supervision during manufacture of materials" of the Rules for Technical Supervision During Construction of Ships and Manufacture of Materials and Products for Ships.

4.2.3.4 Depending on the determined content of diffusion hydrogen in the deposited metal, the welding consumables may be classified by the Register with assignment of classification notations H5, H10 or H15.

Individual and general average values of diffusible hydrogen content shall be submitted in the test reports. The method of determining the diffusion hydrogen content shall be specified in the test report.

The general average values for 4 specimens shall not exceed the values specified in Table 4.2.3.4.

Table 4.2.3.4

Classification notation by hydrogen content[1]	Content of diffusion hydrogen in the deposited metal when using the method, max. cm^3/100 g of deposited metal	
	ISO 3690[2]	Glycerine[3]
H15	15	15
H10	10	10
H5	5	Not applicable

[1] For very low hydrogen welding consumables, an additional notation 3 may be used to indicate an average value of diffusion hydrogen content max. 3,0 cm^3/100 g of deposited metal.
[2] Together with mercury and TCD (gas chromatographic) methods regulated by ISO 3690, diffusion hydrogen content may be determined using the vacuum method (GOST 23339, method 2) provided that all the requirements specified in 5.4.6, Part III "Technical supervision during manufacture of materials" of the Rules for Technical Supervision During Construction of Ships and Manufacture of Materials and Products for Ships are met.
[3] If all the requirements to this test method as specified in 5.4.6, Part III "Technical supervision during manufacture of materials" of the Rules for Technical Supervision During Construction of Ships and Manufacture of Materials and Products for Ships are met.

4.2.4 Hot cracking tests of welded joint.

4.2.4.1 Hot cracking tests of weld metal and welded joint shall be carried out by welding a tee-joint test assembly as shown in Fig. 4.2.4.1. The number of test assemblies to be tested:

three assemblies for manual welding with covered electrodes;

one assembly for semiautomatic gas-shielded welding with a solid and flux-cored wire (for use with or without a shielding gas);

one assembly for manual and mechanized tungsten inert gas welding.

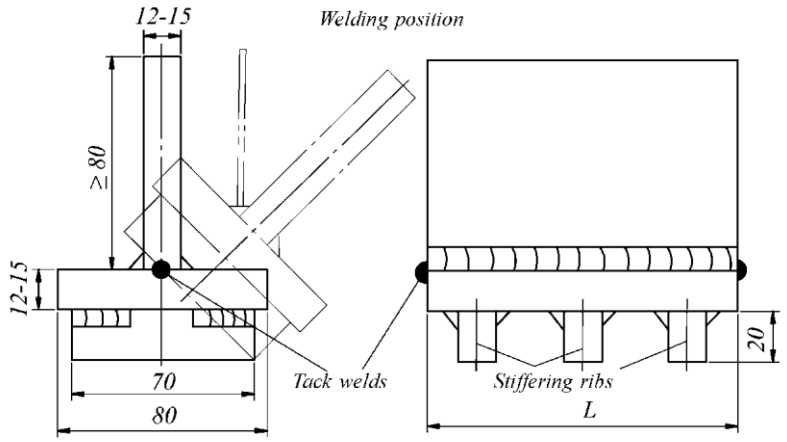

Fig. 4.2.4.1
Tee-joint test assembly for hot cracking test of welded joint:
L = 120 mm — for manual welding with covered electrodes;
L = 250 mm — for semiautomatic metal-arc electrode welding;
L = 200 mm — for manual inert-gas tungsten-arc welding

Where possible, the test assemblies shall be welded using the filler materials of different diameters:

electrodes of 4 mm in diameter and of the maximum diameter to be approved;

welding wire of 1,2 mm in diameter for the "solid wire — gas" combinations and of the maximum diameter to be approved (generally 1,6 mm);

flux-cored wire for gas-shielded welding and flux-cored wire for use without shielding gas of 1,2 mm (or 1,4 mm) in diameter and of the maximum diameter to be approved (1,6 to 2,4 mm).

4.2.4.2 The butt edge of the vertical plate of a test assembly shall be smooth and fit closely to the lower plate surface. The gaps in a joint shall be eliminated before welding the test assembly. To match the test assembly, tack welds shall be made on the butt ends of the plates. The lower plate shall be stiffened by welding three transverse ribs to protect it against deformation.

4.2.4.3 The tee-joint test assembly shall be welded in the downhand (gravity) position PA. The fillets shall be single-run welds joined at the maximum current recommended for the particular type and size of electrodes by the manufacturer.

The second fillet shall be welded immediately after the first one and shall end at that side of the test assembly where the first one was started. Both fillets shall be executed at a constant speed without weaving.

4.2.4.4 When welding a test assembly with covered electrodes (welding process 111), the length of each fillet (about 120 mm) shall correspond to that of the consumed part of the electrode according to Table 4.2.4.4-1.

Table 4.2.4.4-1

Diameter of electrode, mm	Consumed length of electrode, mm	
	1st weld	2nd (back) weld
4	200	150
5	150	100
6	100	75

When welding a tee-joint test assembly using the semiautomatic gas-shielded welding ("wire — gas" combination), the diameters of welding wire and the throat thickness shall be according to Table 4.2.4.4-2.

Table 4.2.4.4-2

Diameter of welding wire, mm	1st weld		2nd (back) weld	
	Effective throat thickness of fillet *a*, mm	Weld length *L*, mm	Effective throat thickness of fillet *a*, mm	Weld length *L*, mm
1,2	9	250	7	250
1,6	9	250	7	250

For welding with flux-cored wire, the relevant parameters for welding the test assembly shall be according to Table 4.2.4.4-3.

Table 4.2.4.4-3

Diameter of welding wire, mm	1st weld		2nd (back) weld	
	Effective throat thickness of fillet *a*, mm	Weld length *L*, mm	Effective throat thickness of fillet *a*, mm	Weld length *L*, mm
1,2 or 1,4	9	250	7	250
2,4[1]	10	250	9	250
[1] Or the maximum diameter to be approved.				

For inert gas welding of the test assembly with a tungsten electrode, the fillet dimensions shall approximately correspond to those when welding with covered electrodes of 4 to 5 mm in diameter.

4.2.4.5 After welding the test assembly and its complete cooling to the room temperature, slag and spatter shall be removed from the surface of the weld and affected zone, and the fillets shall be visually examined for surface cracks. In case the cracks are revealed, the test results are considered unsatisfactory and the further examination of the test assembly is not conducted. Upon satisfactory results of the examination for surface cracks, the test assembly examination shall be continued by fracture testing according to 4.2.4.6 or, upon agreement with the Register, by magnetic particle testing.

4.2.4.6 The fracture test of the tee-joint test assembly shall be conducted in compliance with the following requirements.

The first fillet shall be removed in a mechanical manner, and the second (back) one shall be tested for fracture with the failure to be positioned approximately in the middle of the fillet cross-section.

Note. During fracture testing, the test assembly of 250 mm in length shall be preliminary divided into three equal parts, and the test assembly of 200 mm in length, into two sections. The test assemblies of 120 mm in length shall be tested for fracture as a whole.

4.2.4.7 The fracture surface of the back weld shall be visually examined for intolerable defects. The examination shall be conducted with the naked eye and by means of 5X or 10X magnifying glass.

The welded joints, which have no cracks or intolerable defects on the fracture surface of back welds revealed in magnetic particle testing, are considered resistant to hot cracking.

4.2.5 Requirements for re-test procedures.

4.2.5.1 Tensile and bend tests.

Where the results of a tensile or bend test do not comply with the specified requirements, duplicate test specimens shall be prepared and tested. In case of the sufficient metal reserve, the specimens for re-test shall be taken from the test assembly used in the initial testing. Where insufficient original welded assembly is available, a new test assembly shall be prepared using welding consumables of the same batch. If the new assembly is made with the same welding procedure (in particular, the same number of layers and runs), only the duplicate re-test

specimens need to be tested. Otherwise all test specimens shall be prepared for re-testing, including the duplicate test specimens failed in the initial testing.

In case the results of tests carried out on the duplicate test specimens are satisfactory, the welding consumable submitted to tests may be accepted.

If at least one specimen (from the additional ones) yields unsatisfactory results, the welding consumable submitted to tests shall be rejected.

4.2.5.2 Impact test.

The cases of unsatisfactory test results include:

when the average value of three impact tests fails to meet the specified requirements;

or more than one result out of three is below the required average value;

or the result of any one of the specimens is more than by 30 % below the required average value.

In any of the above cases, re-tests may be conducted on the additional three specimens machined from the same test assembly if the sufficient metal reserve is available. At that the test results are considered satisfactory if the new average value of impact energy (three initial tests plus additional tests) exceeds the required average value and not more than two results out of six are below the required average value, and not more than one specimen has yielded the result, which is by 30 % below the required one.

When the test results for three initial and three additional specimens are unsatisfactory, the further tests shall be agreed with the Register. In this case a new test assembly shall be welded using the welding consumables of the same batch, and the test shall be conducted to the extent that shall include all the types of the tests provided for testing the first test assembly, as well as those with satisfactory results.

4.2.5.3 Hot cracking tests.

Where cracks are detected in the welded joint test assemblies being tested, the test results are considered unsatisfactory, and the welding consumables cannot be approved. Where isolated end crater cracks caused by the welder's poor skills are revealed, re-tests shall be performed with the same number of test assemblies after the relevant additional training of a welder in operating the welding consumables being tested.

4.3 COVERED ELECTRODES FOR MANUAL ARC WELDING OF NORMAL AND HIGHER STRENGTH HULL STRUCTURAL STEELS

4.3.1 General.

4.3.1.1 The following requirements apply to covered electrodes intended for the manual arc welding of normal and higher strength hull structural steels, steel forgings and castings of the corresponding strength grades, and of comparable steels intended for manufacturing ship's structures and pressure vessels. The number of test assemblies and specimens required is given in Table 4.3.1.1.

Table 4.3.1.1

Test assembly						Number and type of specimens[2]
Type	Welding position[1]	Electrode diameter, mm	Number	Thickness, mm	Dimensions	
Deposited metal	PA	Ø4	1	20	Fig. 4.3.2.1	1LT+3KV
		Max. Ø	1			
Butt weld	PA	1st run: Ø 4 Intermediate: Ø 5 Last two layers max. Ø	1	15 — 20	Fig. 4.3.3.1	1TT+1RB+1FB+3KV
	PF	1st run: Ø 3,0 or 3,25 Remaining runs: Ø 4	1			1TT+1RB+1FB+3KV
	PG	Refer to 4.3.3.2	1			1TT+1RB+1FB+3KV
	PC	1st run: Ø 4,0 Remaining runs: Ø 5	1			1TT+1RB+1FB+3KV
	PE	1st run: Ø 3,0 or 3,25 Remaining runs: Ø 4	1			1TT+1RB+1FB+3KV
Fillet weld	PB	1st side: min. Ø	1	15 — 20	Fig. 4.3.6.2	M+FF+HV
		2nd side: max. Ø				

[1] Welding positions are designated according to ISO 6947.
[2] The following abbreviations are used for the type of specimens:
LT — longitudinal cylindrical tensile test specimen;
TT — transverse flat tensile test specimen;
RB — transverse root bend test specimen;
FB — transverse face bend test specimen;
KV — transverse Charpy V-notch impact test specimen;
FF — fillet fracture test specimen;
M — transverse macrosection;
HV hardness measurement specimen.

4.3.1.2 Covered electrodes are divided, for the various strength levels of the deposited metal (R_{eH}, min), into the following grades:

1, 2, 3 and 4 for normal strength steels;

2Y, 3Y, 4Y and 5Y for higher strength steels with the specified yield stress of up to 355 MPa, inclusive;

2Y40, 3Y40, 4Y40 and 5Y40 for higher strength steels with the specified yield stress of up to 390 MPa, inclusive.

Depending on the diffusible hydrogen content in the deposited metal, symbols H15, H10 or H5 are added to the grade mark as per 4.2.3.4.

4.3.1.3 A manufacturer shall submit for review the following information and technical documentation attached to the request for approval:

trade name of electrodes;
range of standard sizes (diameter, length) of the welding consumables to be approved;
type of electrode covering;
grade, for which the application is made, including additional symbols;
chemical composition (analytical tolerances) of the deposited metal;
weld metal recovery according to the relevant international and national standards;
welding technique and type of current;
proposed range of application and welding positions;
marking and packing;

information on manufacturing capacity, facilities and quality control procedure;

instructions/recommendations for use;

information on the approvals granted by other classification societies or technical supervisory bodies, including copies of the required documents.

The technical documentation to be approved by the Register includes:

manufacturer's technical specifications or specifications for welding consumables, including the updated catalogues;

instructions for manufacture, acceptance and quality control.

4.3.2 Tests of deposited metal.

4.3.2.1 Preparation of test assemblies.

Two deposited metal test assemblies shall be welded in the flat position as shown in Fig. 4.3.2.1, one with 4 mm diameter electrodes and the other with the largest size manufactured.

If the electrodes are available in one diameter only, one test assembly is sufficient. Any grade of ship structural steel may be used for the preparation of the test assembly.

The weld metal shall be deposited in a single or multi-run layers according to normal practice to use electrodes (bead width), and the direction of deposition of each layer shall generally alternate from each end of the plate, each run of weld metal being not less than 2 mm and not more than 4 mm thick. Between each run the assembly shall be left in still air until it has cooled to less than 250 °C, but not below 100 °C, the temperature being taken in the center of the weld on the surface of the seam. After being welded, the test assemblies shall not be subjected to any heat treatment.

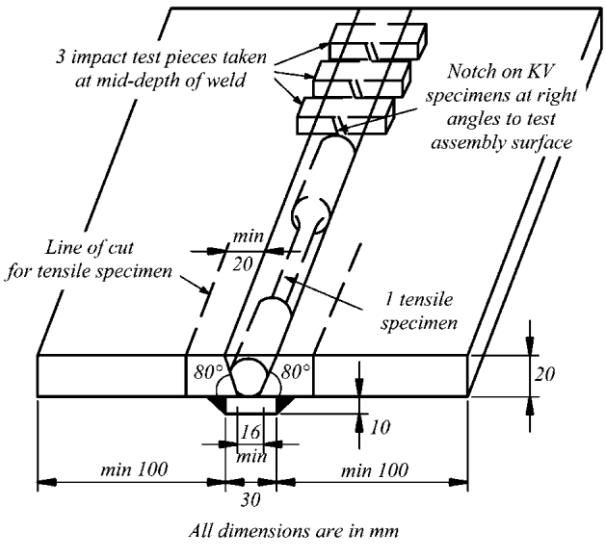

Fig. 4.3.2.1
Deposited metal test assembly when testing electrodes for manual arc welding (test specimens are designated according to Table 4.3.1.1)

4.3.2.2 Chemical analysis of deposited metal.

Test specimens shall be taken from each test assembly for chemical analysis of the deposited metal including the content of all alloying elements and impurities regulated by documentation for the product manufacture and acceptance control.

4.3.2.3 Test procedure.

One longitudinal tensile test specimen and three impact test specimens shall be taken from each test assembly according to Fig. 4.3.2.1. The specimen cutting-out, preparation and tests shall be performed in accordance with 4.2.2.1.1 and 4.2.2.3, respectively.

4.3.2.4 Requirements for test results.

The results of all the tests shall meet the requirements in Table 4.3.2.4 for the relevant grades of welding consumables.

Table 4.3.2.4

Grade	Yield stress R_e, MPa, min.	Tensile strength R_m, MPa	Elongation $A5$, ($L_0 = 5d$), %	Impact test	
				Test temperature, °C	Impact energy KV, J, min.
1	305	400 — 560	22	20	47
2				0	47
3				–20	47
4				–40	47
2Y	375	490 — 660	22	0	47
3Y				–20	47
4Y				–40	47
5Y				–60	47
2Y40	400	510 — 690	22	0	47
3Y40				–20	47
4Y40				–40	47
5Y40				–60	47

4.3.3 Tests of butt welded joint.

4.3.3.1 Preparation and manufacture of test assemblies.

To check the properties of a butt welded joint in each welding position (downhand, vertical-upward, vertical-downward, overhead and horizontal-vertical) for which the electrodes are approved, one test assembly shall be welded in each position. In this case the electrodes for welding in downhand and vertical-upward positions may be considered to meet the relevant requirements for welding in horizontalvertical position.

If the electrodes are approved for welding in downhand position only, two test assemblies shall be prepared in that position.

Butt weld test assemblies for electrode testing shall be as shown in Fig. 4.3.3.1.

Depending on the grade of electrodes for preparing the welded joint test assemblies, the hull structural steel of one among the categories listed in Table 4.3.3.1 shall be used.

The copy of a certificate for the base metal for preparing the welded joint test assemblies shall supplement the test report.

4.3.3.2 Requirements for welding test assemblies.

The test assemblies for individual welding positions shall be welded as indicated below:

downhand position — PA. One test specimen welded using 4 mm electrodes for the first run, 5 or 6 mm electrodes for intermediate runs (excluding the last two) in compliance with the normal practice of using electrodes. Electrodes of the maximum diameter to be approved for the last two runs;

downhand position — PA (when the second downhand test is required). One test specimen welded using 4 mm electrodes for the first run, 5 mm electrodes for the second run, and electrodes of the maximum diameter to be approved for the remaining runs;

horizontal position — PC. One test specimen welded using 4 mm or 5 mm electrodes for the first run, 5 mm electrodes for the remaining runs;

vertical-upward and overhead positions — PF and PE, respectively. One test specimen welded using 3,0 (3,25) mm electrodes for the first run, 4 mm or possibly 5 mm electrodes, if recommended by the manufacturer for welding in the positions concerned for the remaining runs;

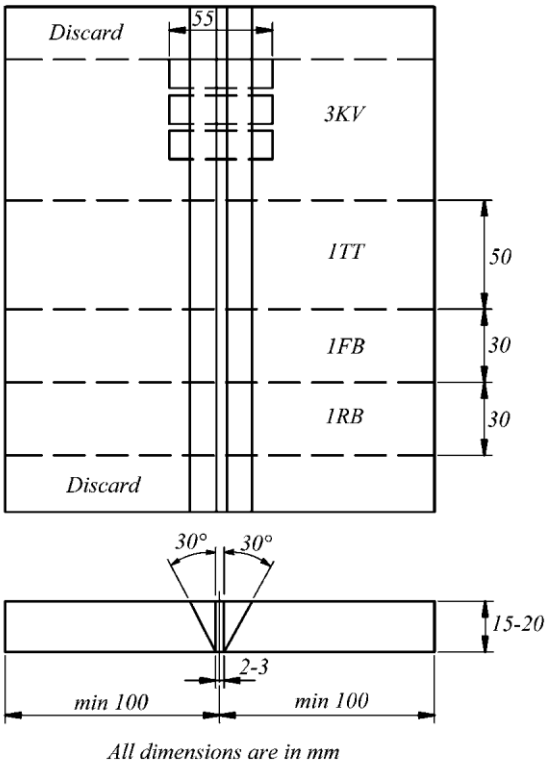

Fig. 4.3.3.1
Butt weld test assembly when testing electrodes for manual arc welding (test specimens are designated according to Table 4.3.1.1)

Table 4.3.3.1

Electrode grade	Steel grade for test assembly[1]
1	A
2	A, B, D
3–4	A, B, D, E
2Y	A32, A36, D32, D36
3Y	A32, A36, D32, D36, E32, E36
4Y-5Y	A32, A36, D32, D36, E32, E36, F32, F36
2Y40	A40, D40
3Y40	A40, D40, E40
4Y40 5Y40	A40, D40, E40, F40
[1] The actual tensile strength of grades 32 to F32 shall be greater than 490 MPa.	

vertical-downward position — PG. When the electrodes shall be used for vertical-downward welding, this procedure shall be used for preparation and welding of the test assembly using the electrodes of the diameter recommended by the manufacturer.

For all assemblies, the back sealing run shall be made with 4 mm diameter electrodes, in the welding position appropriate to each test specimen, after back gouging to sound metal. For electrodes suitable for downhand welding only, the test assemblies may be turned over to carry out the backing seal.

The test assembly shall be welded in compliance with the normal practice of using electrodes. Between each run the assembly shall be left in still air until it has cooled to less than 250 °C, but not below 100 °C. The temperature shall be measured in the center of the weld on the surface of the seam. After being welded, the test assemblies shall not be subjected to any heat treatment.

4.3.3.3 Radiographic testing.

Prior to the preparation of specimens for mechanical testing, the radiographic testing of butt weld test assemblies is recommended for detecting any internal defects.

4.3.3.4 Test procedure.

From each butt weld test assembly according to Fig. 4.3.3.1 shall be taken:

one transverse flat tensile test specimen;

three transverse V-notched impact test specimens;

one transverse root and one transverse face bend test specimen.

4.3.3.5 Requirements for test results.

The results of all tests shall meet the requirements of Table 4.3.3.5 for the relevant grades of welding consumables. The requirements for tests performance and results evaluation shall be in accordance with the provisions in 4.2.

Table 4.3.3.5

Grade	Tensile strength R_m (transverse specimens), MPa, min.	Impact test		
		Test temperature, °C	Impact energy *KV*, J, min.	
			Downhand, horizontal-vertical and overhead	Vertical (upward and downward)
1	400	20	47	34
2		0	47	34
3		–20	47	34
4		–40	47	34
2Y	490	0	47	34
3Y		–20	47	34
4Y		–40	47	34
5Y		–60	47	34
2Y40	510	0	47	39
3Y40		–20	47	39
4Y40		–40	47	39
5Y40		–60	47	39

4.3.4 Hot cracking tests of welded joint.

4.3.4.1 Hot cracking tests of the weld metal and welded joint shall be carried out thief required by the Register according to 4.2.4.

4.3.5 Tests for checking diffusible hydrogen content in deposited metal.

4.3.5.1 The tests for checking diffusible hydrogen content in the deposited metal shall be carried out in compliance with the provisions in 4.2.3 relative to the covered electrodes intended for welding the higher strength steels of categories: 2Y, 2Y40, 3Y, 3Y40, 4Y, 4Y40, and also 5Y and 5Y40.

Grade 2, 3 and 4 electrodes intended for welding normal strength steels may be classified for diffusible hydrogen content in the deposited metal as an option in accordance with the manufacturer's request.

The tests for checking diffusible hydrogen content in the deposited metal are generally conducted at the initial approval of welding consumables, and also if required by the Register during annual tests or on the manufacturer's request during upgrading tests.

4.3.6 Tests of electrodes for manual arc fillet welding.

4.3.6.1 Where the electrodes, according to the manufacturer's request, are submitted for approval for fillet welding only, and the scope of their testing to the full extent as per 4.3.3.1 cannot be applied, they shall be subjected to the following tests for the initial approval:

tee-joint testing according to 4.3.6.2 in all the welding positions, for which the electrodes shall be used; checking of the deposited metal properties according to 4.3.2;

checking of the diffusible hydrogen content in the deposited metal according to 4.3.5 and 4.2.3.

When the electrodes are submitted for approval for both fillet and butt welding, the extent of additional tests (in addition to the general requirements for the test extent) for the initial approval may be limited to welding one tee-joint test assembly in the horizontal-vertical position (PB).

4.3.6.2 Tee-joint test assemblies shall be welded as per Fig. 4.3.6.2. They shall be prepared in each welding position, for which the electrodes are intended (horizontal-vertical, vertical-upward, verticaldownward and overhead). The test assemblies shall be welded with electrodes of the diameter recommended by the manufacturer for the welding position specified. The test assembly length shall be sufficient to allow at least the deposition of the entire length of the electrode being tested. The first weld on the test assembly shall be made with the electrode of the maximum diameter manufactured, and the second one, with the electrode of the minimum diameter manufactured. The fillet size is usually determined by the electrode diameter and welding current being recommended by the manufacturer for specific diameter and welding position. The material for test assembly preparation shall comply with 4.3.3.1.

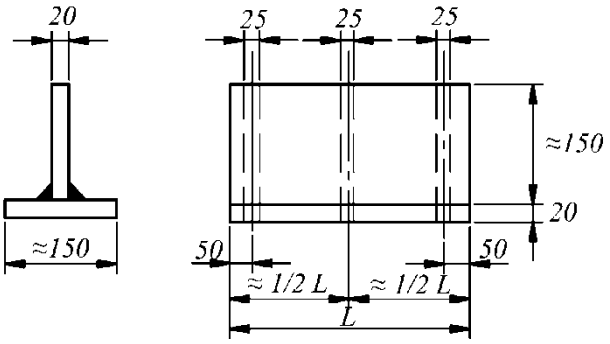

Fig. 4.3.6.2
Tee-joint assembly for testing electrodes for fillet welding

4.3.6.3 Testing of tee-joint assembly:

.1 three macrosections of about 25 mm thick as shown in Fig. 4.6.3.2 shall be selected and prepared from three sections along each tee-joint test assembly. The macrosections shall be examined for root penetration, satisfactory weld profile and freedom from cracks, as well as from porosity and slags;

.2 the hardness of the weld metal, HAZ and base metal shall be measured on the macrosections as shown in Fig. 4.3.6.3. The readings of the weld metal hardness on HV10 scale shall be the following:

≥ 120 HV for electrodes for welding the normal strength steel;

≥ 150 HV for electrodes for welding the higher strength steel with the yield stress R_{eH} ≤ 355 MPa;

≥ 170 HV for electrodes for welding the higher strength steel with the yield stress 355 MPa < R_{eH} ≤ 390 MPa.

The hardness of the base metal and HAZ shall also be measured and reported;

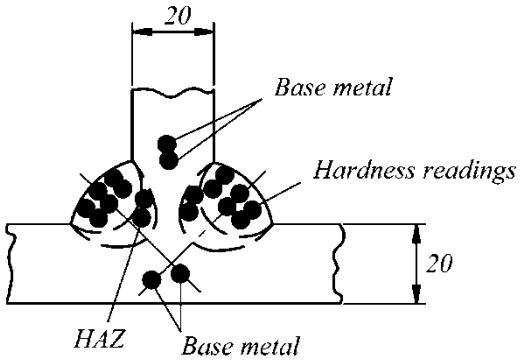

Fig. 4.3.6.3
Sketch of hardness readings on the macrosection of tee-joint assembly

.3 two remaining parts of the tee-joint assembly shall be subjected to fracture testing. One part is tested, after the removal of the first weld by mechanical gouging or with a chisel, by folding the plates together and tensioning the remaining weld root (refer to 6.3.4.4). Another part is tested after the removal

of the second weld by mechanical gouging or with a chisel. The fractured surfaces shall be examined for root penetration and freedom from cracks and significant porosity.

4.3.7 Tests of electrodes for gravity and contact welding.

4.3.7.1 The electrodes approved only for gravity and contact welding, shall be subjected to the initial tests similar to those for manual electrodes:

deposited metal tests;

tee-joint tests (refer to 4.3.6);

butt weld tests, where appropriate.

In so doing, additionally to the manual welding of test assemblies, the tests using the gravity and contact welding, according to the manufacturer's recommendations shall be carried out to the following extent:

tee-joint assembly tests (refer to 4.3.6);

butt weld tests, where appropriate.

Where the electrodes for fillet welding are used for the gravity and contact welding, the tee-joint test assemblies shall be welded using the procedure recommended by the manufacturer and the longest size of electrode manufactured. In this case a report shall include the manufacturer's recommendations on the range of a welding current for each electrode size.

Where the approval is required for normal and higher strength steels, the higher strength steel shall be used for welding tee-joint and butt weld test assemblies.

4.3.8 Annual and upgrading tests.

4.3.8.1 Annual tests and re-approval surveys of the welding consumables manufacturers.

All the organizations recognized by the Register as electrode manufacturers shall be annually surveyed and their products shall be tested.

The annual tests shall, as a minimum, include the following:

.1 covered electrodes for standard manual arc welding.

The extent of annual testing of the electrodes intended for manual arc welding shall include the preparation of two deposited metal test assemblies according to 4.3.2. The mechanical properties of the deposited metal (one longitudinal tensile test specimen and three impact test specimens from each test assembly) shall comply with the requirements of Table 4.3.2.4. The above mentioned is also applicable to the electrodes for fillet welding only.

If required by the Register, the tests may include the welding of a butt weld test assembly in a downhand or vertical position instead of the deposited metal test assembly for 4 mm electrodes. In this case the test extent may be limited to preparing three impact test specimens.

The extent of annual testing of the electrodes with the controlled diffusible hydrogen content and designated H10 and H5 may, on the Register's demand, include the test of welding consumables for the diffusible hydrogen content in the deposited metal according to 4.2.3;

.2 covered electrodes for gravity and contact welding.

Where the electrodes are approved only for gravity and contact welding, the extent of annual testing shall include the welding of one deposited metal test assembly using the procedure recommended by the manufacturer. When these electrodes are also approved for standard manual arc welding, the annual tests shall be performed according to 4.3.8.1.1.

4.3.8.2 Tests on electrode upgrading:

.1 tests on electrode upgrading are conducted only on the manufacturer's request and shall be preferably combined with the annual tests. Those tests usually need the preparation of butt weld test assemblies in addition to the standard annual tests;

.2 where the upgrading deals only with the change of a temperature when testing the impact test specimens without changing a strength group, only the additional tests of the impact test specimens made of the butt weld assemblies for each welding position specified in the Certificate of Approval for Welding Consumables shall be conducted at the changed temperature. These butt weld assemblies shall be tested in addition to two deposited metal test assemblies required for the usual annual tests (during which the impact tests of specimens are also conducted at the changed temperature);

.3 where the upgrading deals with the extension of the range of approval for welding the steels of a higher strength group, in addition to the standard extent of annual tests, the butt weld test assemblies shall be tested to the full extent according to 4.3.3. In this case the steel for welding the butt weld test assemblies shall meet the requirements in 4.3.3.1 for upgraded welding consumables;

.4 tests for upgrading the electrodes approved for fillet welding only are carried out as follows:

in case the requirements only for the impact test temperature change, the deposited metal shall be tested at the temperature corresponding to the new grade (i.e. without extending the annual test scope);

in case the strength group of electrodes is revised, the tests shall be conducted to the full extent as required for the initial approval according to 4.3.6.

4.4 "WIRE — FLUX" COMBINATIONS FOR SUBMERGED ARC WELDING

4.4.1 General.

4.4.1.1 The requirements given below apply to the "wire — flux" combinations for submerged arc welding of hull structural steels of normal and higher strength, steel forgings and castings of the relevant grades, and also comparable steels for the construction of ship's structures and pressure vessels.

The approval of welding consumables granted in accordance with these requirements is valid for standard single wire welding.

Other welding procedures like such as tandem and multi-wire welding, one-side welding on flux or ceramic backing shall be submitted to separate approval tests. These tests shall be generally carried out in accordance with the requirements given below by a separate program approved by the Register

4.4.1.2 "Wire — flux" combinations depending on the strength level of the deposited or weld metal (R_{eH}, min) are divided into the following grades:

1, 2, 3 and 4 for normal strength steels;

1Y, 2Y, 3Y, 4Y and 5Y for higher strength steels with specified minimum yield stress up to 355 MPa, inclusive;

2Y40, 3Y40, 4Y40 and 5Y40 for higher strength steels with specified minimum yield stress up to 390 MPa, inclusive.

Depending on the welding procedure, the following symbols are added to the grade designation:

T — for welding consumables approved for a two-run technique;

M — for welding consumables approved for multi-run technique;

TM — for welding consumables approved for both techniques.

4.4.1.3 A manufacturer shall generally submit for review the information and technical documentation attached to the request for approval containing the following data:

commercial name of the flux, for which the approval is requested; type of flux (fused or ceramic), typical analysis (or reference to the relevant normative document), type and size of granules (for fused fluxes);

commercial name of the associated wire, limits of chemical composition (or reference to the relevant normative document) and diameters to be approved; producer, supplier, conditions under which it is supplied (surface protection, type, size and weight of the standard coils);

welding technique and grading, under which the approval is requested; type of current and maximum current values, for which the approval is requested;

typical chemical composition of the deposited metal, with particular reference to the contents of Mn, Si and other alloying elements, which shall be specified in all cases; conditions to which the chemical composition refers;

indications, where applicable, regarding the range of the welding parameters (current, voltage and welding speed);

information regarding the efficiency of "wire — flux" combination submitted for approval;

recommended edge preparation for various thicknesses; recommendations and limitations on wire stick-out, if any;

packaging and labelling (marking);

information on manufacturer's workshops, manufacturing facilities, manufacturing and heat treatment cycles, methods and procedures of manufacturer's quality controls;

instructions and recommendations before using the flux (backing or hardening), as applicable;

previous approvals granted to the proposed "wire — flux" combination by other classification societies or supervisory bodies with copies of the required document attached.

The technical documentation to be approved by the Register:

manufacturer's technical specifications or specifications for a welding consumable, including the current catalogue editions;

instructions on the products manufacture, acceptance and quality control.

4.4.1.4 In the general case the number of test assemblies and specimens needed for the initial approval of welding consumables is given in Table 4.4.1.4. In this case a few preliminary specimens (assemblies) may be required by the Surveyor to the Register to be welded, in order to check the operating characteristics and set up the welding parameters.

Table 4.4.1.4

Welding technique	Test assembly				Number and type of specimens[1]
	Type	Number	Thickness, mm	Dimensions	
M	Deposited metal	1	20	Fig. 4.4.2.2.1	2LT+3KV
	Butt weld joint	1	20 — 25	Fig. 4.4.2.3.1	2TT+2RB+2FB+3KV
T	Butt weld joint	1	12 — 15	Fig. 4.4.2.3.1 and Table 4.4.3.2.1	2TT+2TB+3KV
	Butt weld joint	1	20 — 25		1LT+2TT+2TB+3KV
	Butt weld joint	1	30 — 35		1LT+2TT+2TB+3KV
TM	[2]	[2]	[2]	[2]	[2]

[1] The following abbreviations are used for the type of specimens:
LT — longitudinal cylindrical tensile test specimen;
TT — transverse flat tensile test specimen;
RB — transverse root bend test specimen;
FB — transverse face bend test specimen;
TB — transverse side bend test specimen for a two-run technique;
KV — transverse Charpy V-notch impact test specimen.
[2] Test assemblies and tests of all types of specimens are required for both welding techniques; only one longitudinal tensile test (1TL) is required on the deposited metal test.

4.4.2 Multi-run technique (M).

4.4.2.1 General.

Where approval for use with multi-run technique is requested, the deposited weld metal and butt weld tests shall be carried out. The hull structural steel of any grade may be used for welding the deposited metal test assembly. For preparing the butt weld test assembly, one of the hull structural steel grades given in Table 4.4.2.1, depending on the grade of the "wire — flux" combination to be approved, shall be used.

4.4.2.2 Deposited metal test.

4.4.2.2.1 Preparation of test assemblies.

One deposited metal test assembly shall be welded in the downhand position, as shown in Fig. 4.4.2.2.1, in general with a wire having diameter of 4 mm. The welding conditions (current, voltage and welding speed) shall be in accordance with the manufacturer's recommendations and conform with normal good welding practice.

Table 4.4.2.1

"Wire — flux" combination grade	Test assembly steel grade[1]
1	A
2	A, B, D
3–4	A, B, D, E
1Y	A32, A36
2Y	A32, A36, D32, D36
3Y	A32, A36, D32, D36, E32, E36
4Y — 5Y	A32, A36, D32, D36, E32, E36, F32, F36
2Y40	A40, D40
3Y40	A40, D40, E40
4Y40 5Y40	A40, D40, E40, F40

[1] The actual tensile strength of grades 32 to F32 shall be greater than 490 MPa.

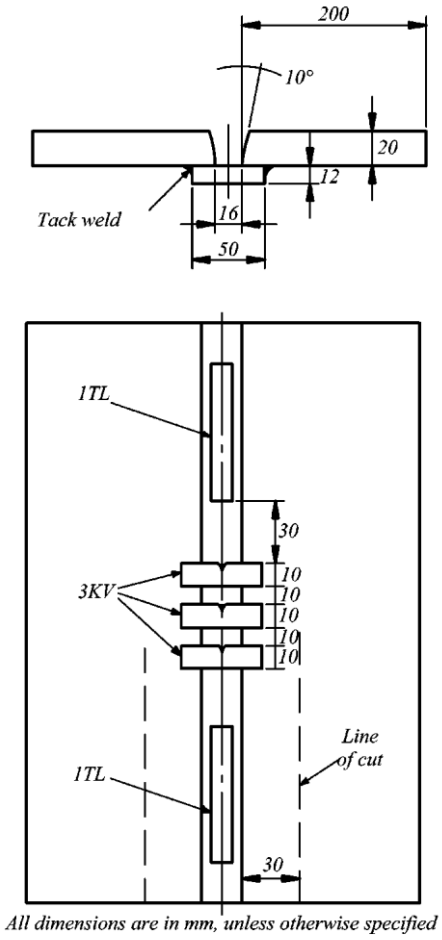

Fig. 4.4.2.2.1
Test assembly of deposited metal during testing of "wire — flux" combinations (test specimens are designated according to Table 4.4.1.4)

The weld metal shall be deposited in multi-run layers consisting of one or several runs according to the normal practice. Direction of deposition of each layer shall, in general, alternate from each end of the plate. After completion of each run, the flux and welding slag shall be removed.

Between each run, the assembly shall be left in still air until it has cooled to less than 250 °C but not below 100 °C. The temperature shall be taken in the centre of the weld on the surface of the seam. The thickness of each layer shall be neither less than the diameter of the wire nor less than 4 mm. After being welded, the test assemblies shall not be subjected to any heat treatment.

4.4.2.2.2 Chemical analysis of deposited metal.

Test specimens shall be taken from each test assembly for chemical analysis of the deposited metal including the content of all alloying elements and impurities regulated by documentation for the product manufacture and acceptance control (as a rule, for ceramic fluxes).

4.4.2.2.3 Test procedure.

Two longitudinal tensile test specimens and three impact test specimens shall be taken from the test assembly as shown in Fig. 4.4.2.2.1. The specimens shall be cut out, prepared and tested according to 4.2.2.1.1 and 4.2.2.3, respectively.

4.4.2.2.4 Requirements for test results.

The results of all tests shall comply with the requirements of Table 4.4.2.2.4 for corresponding welding consumable grades.

Table 4.4.2.2.4

Grade	Yield stress, Re, MPa, min.	Tensile strength, Rm, MPa	Elongation A5, (L0 = 5d), %, min.	Impact test	
				Test temperature, °C	Impact energy KV, J, min.
1	305	400 — 560	22	20	34
2				0	34
3				–20	34
4				–40	34
1Y	375	490 — 660	22	20	34
2Y				0	34
3Y				–20	34
4Y				–40	34
5Y				–60	34
2Y40	400	510 — 690	22	0	39
3Y40				–20	39
4Y40				–40	39
5Y40				–60	39

4.4.2.3 Butt weld test.

4.4.2.3.1 Preparation of test assembly.

One butt weld test assembly shall be welded in a downhand position, as shown in Fig. 4.4.2.3.1, in general with a wire having a diameter of 4 mm. The assembly length shall be sufficient for cutting out the specimens numbered and dimensioned as specified.

The welding shall be performed by the multi-run technique and the welding conditions shall be the same as those adopted for the deposited metal test assembly.

The back sealing run shall be made in a downhand position after back gouging to sound metal. After being welded, the test assemblies shall not be subjected to any heat treatment.

4.4.2.3.2 Radiographic testing.

Prior to the preparation of specimens for mechanical testing, the radiographic inspection of butt weld test assemblies is recommended to ascertain if there are any defects.

4.4.2.3.3 Testing.

The test specimens as shown in Fig. 4.4.2.3.1 and in accordance with Table 4.4.1.4, shall be taken from each butt weld test assembly:

two transverse flat tensile test specimens;

three transverse V-notched impact test specimens;

two transverse root and two transverse face bend test specimens.

4.4.2.3.4 Requirements for test results.

The results of all tests shall comply with the requirements in Table 4.4.2.3.4 for the relevant welding consumable grades. The requirements for testing and results evaluation shall comply with the requirements in 4.2.

4.4.3 Two-run technique (T).

4.4.3.1 Number of test assemblies and general requirements.

Where the "wire — flux" combination approval for use with two-run technique only is requested, two butt weld test assemblies of the base metal thickness within the ranges below depending on the "wire — flux" combination grade shall be prepared:

for grades 1 and 1Y: 12 — 15 mm and 20 — 25 mm;

for grades 2, 2Y, 3, 3Y, 4, 4Y,5Y: 20 — 25 mm and 30 — 35 mm;

for grades 2Y40, 3Y40, 4Y40, 5Y40: 20 — 25 mm and 30 — 35 mm.

In this case deposited metal testing is not required, and the test extent is limited to testing two butt weld test assemblies according to 4.4.3.2.

A limitation of approval to the lower and medium thickness range (up to the maximum welded plate thickness) may be agreed with the Register, and then the test assemblies shall be welded from the plates of a thickness of 12 — 15 mm and 20 — 25 mm, irrespective of the quality grade, for which the combination approval is required.

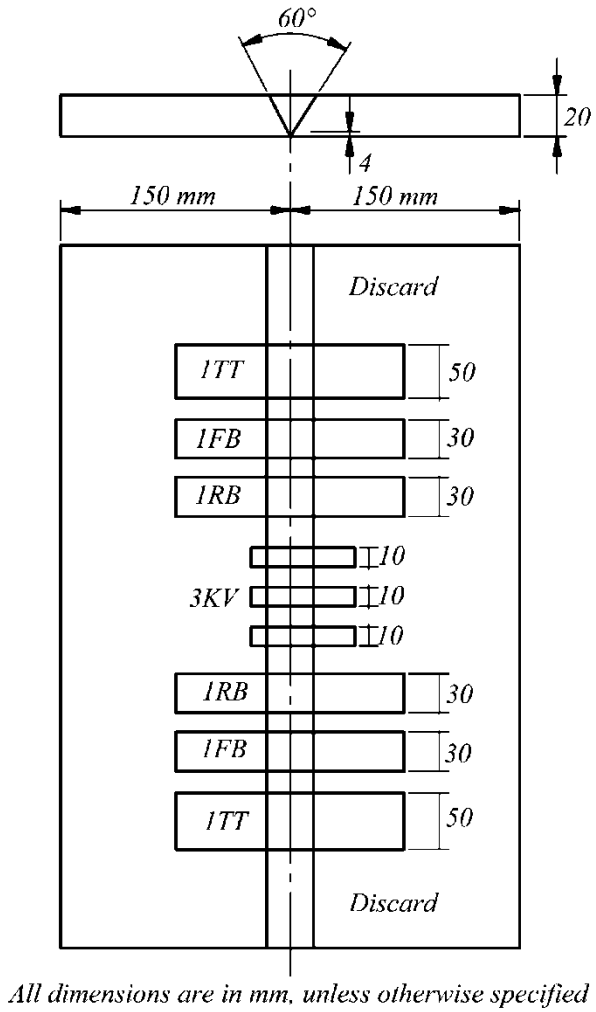

Fig. 4.4.2.3.1
Butt weld test assembly in testing "wire — flux" combinations for multi-run technique
(test specimens are designated according to Table 4.4.1.4)

Table 4.4.2.3.4

Grade	Yield stress (transverse specimen) R_m, MPa, min	Impact test	
		Test temperature, °C	Impact energy *KV*, J, min
1	400	20	34
2		0	34
3		–20	34
4		–40	34
1Y	490	20	34
2Y		0	34
3Y		–20	34
4Y		–40	34
5Y		–60	34
2Y40	510	0	39

Grade	Yield stress (transverse specimen) R_m, MPa, min	Impact test	
		Test temperature, °C	Impact energy *KV*, J, min
3Y40		–20	39
4Y40		–40	39
5Y40		–60	39

Where approval is required for welding normal and higher strength steels, two test assemblies of higher strength steel shall be welded. In this case the Register may demand additional testing of two butt weld test assemblies of normal strength steel.

4.4.3.2 Butt weld test.

4.4.3.2.1 Preparation and manufacture of test assemblies.

The preparation of butt weld test assemblies to approve the two-run welding technique, including the maximum welding wire diameter, steel grades for preparing the test assemblies and details of edge preparation, shall be carried out according to Table 4.4.3.2.1. The test assemblies shall be dimensioned as shown in Fig. 4.4.3.2.1 and allow cutting out the specimens numbered and dimensioned as specified.

Table 4.4.3.2.1

Requirements for preparing butt weld test assemblies for two-run welding technique ("wire — flux" combination)

Test assembly thickness, mm	Edge preparation recommended, mm	Wire diameter, mm, max	Combination grade	Grade of normal strength steel	Grade of higher strength steel[1]
12 — 15	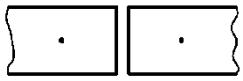	5	1	A	–
			1Y	–	A32, A36
20 — 25	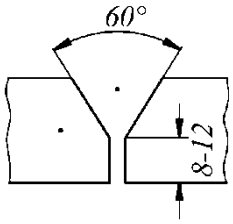	6	1	A	–
			1Y	–	A32, A36
			2	A, B, D	–
			2Y	–	A32, A36,D32, D36
			2Y40	–	A40, D40
			3, 4	A, B, D, E	–
			3Y	–	A32, A36,D32, D36, E32, E36
			3Y40	–	A40, D40, E40
			4Y, 5Y	–	A32,A36,D32, D36,E32,E36, F32, F36
			4Y40, 5Y40	–	A40, D40, E40, F40
30 — 35	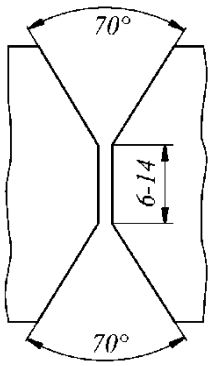	7	2	A, B, D	–
			2Y	–	A32, A36,D32, D36
			2Y40	–	A40, D40
			3, 4	A, B, D, E	–
			3Y	–	A32, A36,D32, D36, E32, E36
			3Y40	–	A40, D40, E40
			4Y, 5Y	–	A32, A36, D32, D36, E32, E36, F32, F36
			4Y40, 5Y40	–	A40, D40, E40, F40

[1] The actual tensile strength of A32 to F32 grade steels shall be above 490 MPa.

Some minor deviations in the edge preparation are allowed, if recommended by the manufacturer. A joint gap shall not exceed 1 mm.

Each butt joint shall be welded in two runs, one from each side. Welding conditions (amperage, voltage and travel speed) shall be within the range recommended by the manufacturer for normal good two-run welding practice.

After the completion of the first run, the flux and welding slag shall be removed and the test assembly left in still air until it has cooled to 100 °C, the temperature being taken in the centre of the weld, on the surface of the seam. After being welded, the test assemblies shall not be subjected to any heat treatment.

4.4.3.2.2 Radiographic testing.

Prior to the preparation of test specimens for mechanical testing, the butt weld test assemblies shall be subjected to radiographic testing to detect any internal defects.

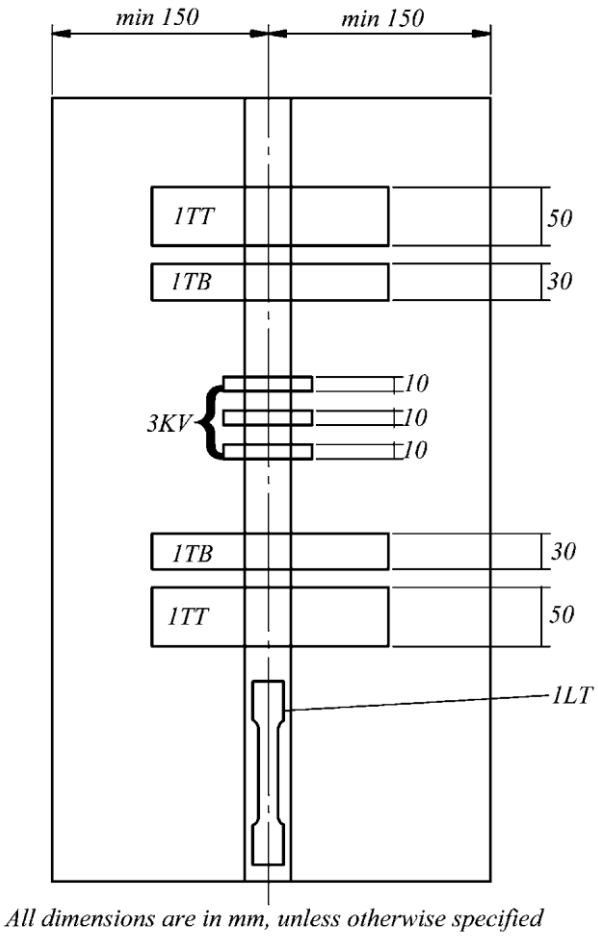

Fig. 4.4.3.2.1
Butt weld test assembly during testing "wire — flux" combinations for two-run welding technique (test specimens are designated according to Table 4.4.1.4)

4.4.3.2.3 Test procedure.

As shown in Fig. 4.4.3.2.1 and in accordance with Table 4.4.1.4, the test specimens, which type and number correspond to the assembly thickness, shall be taken from each butt weld test assembly. The notch orientation and position on the impact test specimens shall be as shown in Fig. 4.4.3.2.3.

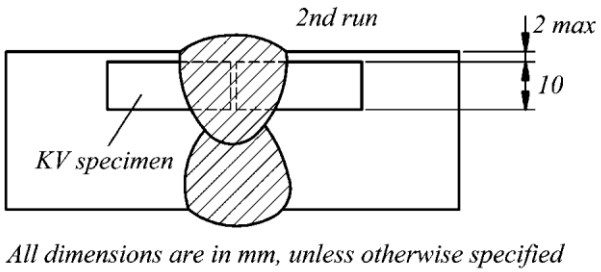

Fig. 4.4.3.2.3
Схема вырезки образцов на ударный изгиб для пробы стыкового соединения, выполненного по двухпроходной технологии сварки

4.4.3.2.4 Requirements for test results.

The results of all tests shall meet the requirements in Table 4.4.2.2.4 for longitudinal cylindrical tensile specimens and in Table 4.4.2.3.4 for the other types of specimens in accordance with the grade of the welding consumables to be approved. The requirements for test procedure and results evaluation shall meet the requirements in 4.2.

4.4.3.2.5 Chemical analysis of deposited metal.

Test specimens shall be taken from each test assembly for chemical analysis of the deposited metal including the content of all alloying elements and impurities regulated by documentation for the product manufacture and acceptance control (as a rule for ceramic fluxes).

4.4.4 Annual and upgrading tests.

4.4.4.1 Annual tests and re-approval surveys of the welding consumables manufacturers.

All the organizations recognized by the Register as welding consumable manufacturers to be used in "wire — flux" combinations shall be annually surveyed and their products shall be tested.

The annual tests shall, as a minimum, include the following:

.1 "wire — flux" combinations for multi-run welding technique.

The extent of the annual tests for the "wire — flux" combinations for the multi-run welding technique shall include the preparation and tests of one deposited metal test assembly according to 4.4.2.2. One longitudinal tensile test specimen and three impact test specimens shall be tested, and the test results shall meet the requirements in Table 4.4.2.2.4;

.2 "wire — flux" combinations for two-run welding technique.

The extent of the annual tests for the "wire — flux" combinations for the two-run welding technique shall include the preparation and tests of one butt weld test assembly of at least 20 mm thick according to 4.4.3.2. One transverse tensile test specimen, two transverse bend test specimens and three impact test specimens shall be tested. In this case, where the combination shall be approved for the two-run welding technique only, one longitudinal cylindrical tensile test specimen shall be tested as well. The test results shall meet the requirements in Table 4.4.3.2.4;

.3 "wire — flux" combinations for multi-run and two-run welding techniques.

The extent of the annual tests for the "wire — flux" combinations for the multi-run and two-run welding techniques shall include the preparation and tests of a deposited metal test assembly and a butt weld test assembly of at least 20 mm thick according to 4.4.4.1.1 and 4.4.4.1.2, respectively. In this case the preparation and test of a longitudinal cylindrical tensile test specimen from the butt weld test assembly are not required.

If the combination is approved for welding normal and higher strength steels, a butt weld test assembly of higher strength steel shall be prepared and tested according to 4.4.4.1.2.

4.4.4.2 Upgrading tests.

4.4.4.2.1 Where the upgrading deals only with the change of a temperature when testing the impact test specimens without changing a strength group, only the additional tests of three impact test specimens made of the butt weld assembly prepared as per 4.4.2.3 for a multi-run welding technique or according to 4.4.3.2 for the base metal of the approved maximum thickness as applied to the two-run welding technique, shall be conducted at that changed temperature. These butt weld test assemblies shall be tested in addition to the extent of the annual tests according to 4.4.4.1 (for which impact test specimens are also tested at the changed temperature).

4.4.4.2.2 Where the upgrading deals with the extension of the range of approval to cover the welding of higher strength level steels, the butt weld test assemblies shall be tested to the full extent according to 4.4.2.3 or 4.4.3.2 in addition to the usual extent of annual testing. In this case the steel for preparing the butt weld assemblies shall meet the requirements in 4.4.2.1 or 4.4.3.2.1 (for multi-run and two-run techniques, respectively) for the new higher grade of welding consumables.

4.5 WIRE AND "WIRE — GAS" COMBINATIONS FOR SHIELDED METAL ARC WELDING

4.5.1 General.

4.5.1.1 The requirements given below apply to "wire — gas" combinations, and also to flux-cored wire (for welding with and without shielding gases), which are intended for semiautomatic and automatic welding of normal and higher strength hull structural steels, steel forgings and castings of the relevant grades, and also comparable steels for the construction of ship's structures and pressure vessels.

As applied to an approval procedure, the welding consumables in question are divided into the following groups:

for use in semiautomatic multi-run welding;

for use in single-electrode automatic multi-run welding;

for use in single-electrode automatic two-run welding.

N o t e . The terms "manual", "semiautomatic" and "automatic" welding in this Part of the Rules are used to designate the following degrees of the welding process mechanization:

manual welding means a process wherein all operations are carried out manually by a welder;

semiautomatic welding means a process wherein the filler metal feed is mechanized while other operations are carried out manually by a welder. According to ISO 857-1, this process is defined as "partially mechanized welding";

automatic welding means a process wherein all main operations, except the product movement, are mechanized. According to ISO 857-1, this process is defined as "fully mechanized welding".

The approval of welding consumables granted in accordance with these requirements is valid for the standard single-wire welding. Other welding procedures such as tandem and multi-wire welding, one-side welding on flux or ceramic backing shall be submitted to separate approval tests. These tests shall be generally carried out in accordance with the requirements given below by a separate program approved by the Register.

4.5.1.2 The "wire — gas" combinations depending on the strength level of the deposited or weld metal (R_{eH}, min) are divided into the following grades:

1, 2, 3 and 4 for normal strength steels;

1Y, 2Y, 3Y, 4Y and 5Y for higher strength steels with the specified minimum yield stress of up to 355 MPa, inclusive;

2Y40, 3Y40, 4Y40 and 5Y40 for higher strength steels with the specified minimum yield stress of up to 390 MPa inclusive.

Depending on the welding procedure, the following symbols are added to the grade designation:

S — for welding consumables approved for semiautomatic multi-run technique;

T — for welding consumables approved for automatic two-run technique;

M — for welding consumables approved for automatic multi-run technique;

TM — for welding consumables approved for both techniques.

For welding consumables approved for semiautomatic and automatic multi-run techniques, the additional symbols shall be added in the combination as appropriate (SM).

Additional symbols H15, H10 or H5 according to 4.5.1.4 are used to designate the grade depending on the diffusible hydrogen content in the deposited metal as applied to a flux-cored wire.

4.5.1.3 Shielding gas composition:

.1 composition of the shielding gas used in approval testing shall be given in the test report and Certificate of Approval for Welding Consumables/Certificate (C). Unless otherwise agreed with the Register, the use of the shielding gas of another composition for the same wire requires additional approval testing;

.2 approval of welding wire in combination with any specific gas composition may be applied to, and extended over, the combinations of this wire with the shielding gases of the similar group of a typical mixture to be determined according to Table 4.5.1.3.2.

Table 4.5.1.3.2

Group of shielding gas mixture		Composition of gas mixtures in volume, %			
		CO_2	O_2	H_2	Ar
M1	1	> 0 — 5	–	> 0 — 5	Base[1, 2]
	2	> 0 — 5	–	–	Base[1, 2]
	3	–	> 0 — 3	–	Base[1, 2]
	4	> 0 — 5	> 0 — 3	–	Base[1, 2]
M2	1	> 5 — 25	–	–	Base[1, 2]
	2	–	> 3 — 10	–	Base[1, 2]
	3	> 5 — 25	> 0 — 8	–	Base[1, 2]
M3	1	> 25 — 50	–	–	Base[1, 2]
	2	–	> 10 — 15	–	Base[1, 2]
	3	> 5 — 50	> 8 — 15	–	Base[1, 2]
C	1	100	–	–	–
	2	Base	> 0 — 3	–	–

[1] Argon may be replaced by helium up to 95 % of the argon content.
[2] Approval covers only the gas mixtures with a similar or higher helium content.

4.5.1.4 Setting of diffusible hydrogen content:

.1 tests for checking diffusible hydrogen content in the deposited metal shall be conducted relevant to the flux-cored wire intended for welding with or without shielding gas for the following grades of welding consumables:

2, 3 and 4, if applicable (consumables may be graded according to 4.2.3.4) in accordance with the manufacturer's request;

1Y, 2Y, 2Y40, 3Y, 3Y40, 4Y, 4Y40, as well as 5Y and 5Y40.

The tests are carried out as per 4.2.3 under the welding conditions recommended by the manufacturer at a welding speed providing mass of the metal deposited on a specimen similar in value to that for testing the electrodes (15 to 20 g per 100 mm of the weld);

.2 on the basis of the test results obtained and requirements in 4.2.3.4, the symbols H15, H10 or H5 featuring the diffusible hydrogen content in the deposited metal shall be added to the designation of the combination grade according to 4.5.1.2.

4.5.1.5 Information and documentation to be submitted for review.

A manufacturer shall generally submit for review the information and technical documentation attached to the request for approval containing the following data:

commercial name, type of welding wire, limits of chemical composition in the case of bare wires and information on additives in the case of flux-cored wires (or reference to a relevant normative document), and range of wire diameters to be approved; producer, supplier, conditions of supply (surface condition, type, diameters and weight of standard coils);

welding technique and grading, under which the approval is requested; type of current, welding positions and range of current, for which the approval is requested;

properties, composition and requirements relevant to the shielding gas or gas mixture; commercial brand and a manufacturer, in the case of gas mixtures of special types;

typical chemical composition of the deposited metal, with particular reference to the contents of Mn, Si and other alloying elements, which shall be specified in all cases; conditions to which the chemical composition refers;

main operating characteristics and welding techniques (such as spray arc, short arc or dip transfer), associated recommendations and limitations;

packaging and labelling (marking);

manufacturer's workshop, manufacturing facilities, manufacturing and treatment cycles, methods and procedures of manufacturer's quality controls;

recommendations for storing and preservation of flux-cored and coated wires;

information on the approval granted by other classification societies or technical supervisory bodies with copies of the required document attached.

The technical documentation to be approved by the Register:

manufacturer's technical specifications or specifications for welding consumables, including the current catalogue editions;

instructions on the products manufacture, acceptance and quality control.

4.5.2 Welding wire and "wire — gas" combinations for semiautomatic multi-run welding.

4.5.2.1 General requirements.

The approval test relevant to semiautomatic multi-run welding shall be conducted according to 4.3 using the flux-cored wire or "wire — gas" combinations for welding the test assemblies. The number of test assemblies and test specimens required is given in Table 4.5.2.1.

Table 4.5.2.1

Test assembly						Number and type of specimens3
Type	Welding position1, 2	Electrode diameter, mm	Number	Thickness, mm	Dimensions	
Deposited metal	PA	1,2 or min. Ø	1	20	Fig. 4.3.2.1	1LT+3KV
		Max. Ø	1[4]			
Butt weld	PA	1st run: 1,2 or min. Ø Remaining runs max. Ø	1[5]	15 — 20	Fig. 4.3.3.1	1TT+1RB+1FB+3KV
	PF	1st run: 1,2 or min. Ø Remaining runs: max. Ø for specific position	1			1TT+1RB+1FB+3KV
	PG		1			1TT+1RB+1FB+3KV
	PC		1			1TT+1RB+1FB+3KV
	PE		1			1TT+1RB+1FB+3KV
Fillet weld	6	1st side: min. Ø	1	15 — 20	Fig. 4.3.6.2, Fig. 4.3.6.3	M+FF+HV
		2nd side: max. Ø				

[1] Welding positions are designated according to ISO 6947.
[2] When the approval is requested only for one or limited number of welding positions, the butt weld test assemblies shall be welded in such positions only.
[3] The following abbreviations are used for the type of specimens:
LT — longitudinal cylindrical tensile test specimen;
TT — transverse flat tensile test specimen;
RB — transverse root bend test specimen;
FB — transverse face bend test specimen;
KV — transverse Charpy V-notch impact test specimen;
FF — fillet fracture test specimen;
M — transverse macrosection;
HV — hardness measurement specimen.
[4] When the approval is requested only for one diameter, only one deposited metal test assembly shall be prepared.
[5] When the approval is requested for a downhand welding position only, two test assemblies shall be prepared in this position: one using the largest diameter wire, and another using the wire of an increasing diameter from the first to the last run.
[6] Fillet weld test assemblies shall be welded in the position required for approval.

4.5.2.2 Deposited metal test.

4.5.2.2.1 Preparation and manufacture of test assembly.

Two deposited metal test assemblies shall be welded in a downhand position as shown in Fig. 4.3.2.1, one using a wire of 1,2 mm or the smallest size, and the other using a wire of the largest size intended for welding hull structures. If only one diameter is available, one test assembly is sufficient. Any grade of hull structural steel may be used for the preparation of the test assembly.

The weld metal is deposited in multi-run layers according to the manufacturer's recommendations and the normal practice, and the direction of deposition of each layer shall, in general, alternate from each end of the plate. Each weld bead shall be within 2 mm to 6 mm thick. Between each run the assembly shall be left in still air until it has cooled to less than 250 °C, but not below 100 °C, the temperature being taken in the centre of the weld on the

surface of the seam. After being welded, the test assemblies shall not be subjected to any heat treatment.

4.5.2.2.2 Chemical analysis of deposited metal.

Test specimens shall be taken from each test assembly for chemical analysis of the deposited metal including the content of all alloying elements and impurities regulated by documentation for the product manufacture and acceptance control (as a rule, for flux-cored wire).

4.5.2.2.3 Mechanical tests.

One longitudinal tensile test specimen and three impact test specimens shall be taken from each test assembly according to Table 4.5.2.1 and Fig. 4.3.2.1. The specimens shall be cut out, prepared and tested according to the instructions in 4.2.2.1.1 and 4.2.2.3, respectively.

The results of all tests shall comply with the requirements of Table 4.3.2.4 for the corresponding welding consumable grade.

4.5.2.3 Butt weld test.

4.5.2.3.1 Preparation and manufacture of test assemblies.

To check the properties of a butt welded joint in each welding position (downhand, horizontal, vertical upwards and downwards and overhead) for which the "wire-gas" combination shall be approved, one test assembly as shown in Fig. 4.3.3.1 shall be welded in each position. The hull structural steel of one of the grades in Table 4.3.3.1 shall be used for preparing the assemblies.

The test assemblies for individual welding positions shall be welded as indicated below:

downhand position — PA. One test specimen welded using a wire of 1,2 mm or the minimum diameter to be approved for the first run and a wire of the maximum diameter to be approved for the remaining runs;

where approval is requested for a downhand welding position only, two test assemblies shall be welded in that position: the first using a wire of the maximum diameter, and the second using the wire of an increasing diameter from the first to the last run. When the wire of one diameter is available, one test assembly shall be prepared;

welding positions other than the downhand one (PC, PE, PF and PG). One test specimen welded using a wire of 1,2 mm or the minimum diameter to be approved for the first run and a wire of the maximum diameter recommended by a manufacturer for a specific welding position for the remaining runs.

After being welded, the test assemblies shall not be subjected to any heat treatment.

4.5.2.3.2 Radiographic testing.

Prior to the preparation of specimens for mechanical testing, the radiographic testing of butt weld test assemblies is recommended for detecting any internal defects.

4.5.2.3.3 Mechanical tests.

As shown in Fig. 4.3.3.1 and in accordance with Table 4.5.2.1, from each butt weld test assembly the following specimens shall be taken:

one transverse flat tensile test specimen;

three transverse V-notched impact test specimens;

one transverse root and one transverse face static bend test specimens.

The results of all tests shall comply with the requirements in Table 4.3.3.5 for the relevant welding consumable grades. The requirements for test procedure and their results evaluation shall meet the requirements in 4.2.

4.5.2.4 Tee-joint weld test.

The tee-joint weld test is required for the "wire — gas" combinations intended for fillet welding only and is conducted similarly to the requirements in 4.3.6 for the covered electrodes. Test assemblies shall be manufactured in the welding positions to be approved according to 4.3.6.2. The test extent and results shall comply with the requirements in 4.3.6.3.

4.5.2.5 Tests for checking diffusible hydrogen content in deposited metal.

The tests for checking the diffusible hydrogen content in the deposited metal shall be carried out in compliance with the provisions in 4.2.3 and 4.5.1.4 relevant to the flux-cored wire intended for welding the higher strength steels of categories: 1Y, 2Y, 2Y40, 3Y, 3Y40, 4Y, 4Y40, as well as 5Y and 5Y40.

Grade 2, 3 and 4 flux-cored wire intended for welding normal strength steels may be graded for the diffusible hydrogen content in the deposited metal as an option in accordance with the manufacturer's request.

The tests for checking the diffusible hydrogen content in the deposited metal are generally conducted at the initial approval of welding consumables, and also, if required by the Register, during annual tests or on the manufacturer's request during upgrading tests.

4.5.3 Welding wire and "wire — gas" combinations for automatic multi-run welding.

4.5.3.1 General requirements:

.1 the wire and "wire — gas" combinations tested according to 4.5.2 and approved by the Register for semiautomatic multi-run welding are also approved for automatic multi-run welding without additional testing. This provision is valid if the automatic and semiautomatic welding conditions (current, heat input, etc.) are similar, i.e. different in the way of welding torch movement only;

.2 the tests on the approval of an automatic multi-run welding technique shall be conducted according to 4.4.2 using a flux-cored wire or "wire — gas" combinations for welding test assemblies. The number of specimens required for testing and taken from each tests assembly shall be according to Table 4.4.1.4.

4.5.3.2 Deposited metal test.

4.5.3.2.1 Preparation and manufacture of test assemblies.

One test assembly of the deposited metal shall be welded in a downhand position as shown in Fig. 4.4.2.2.1.

The wire diameter, test assembly welding conditions (amperage, voltage, welding speed) shall comply with the manufacturer's recommendations.

The test assembly shall be prepared and manufactured according to 4.4.2.2.1, except the requirements for the minimum thickness of each layer which shall be 3 mm.

4.5.3.2.2 Chemical analysis of deposited metal.

Test specimens shall be taken from a test assembly for chemical analysis of deposited metal, including the content of all alloying elements and impurities regulated by documentation for the product manufacturer and acceptance control (as a rule, for flux-cored wire).

4.5.3.2.3 Mechanical tests.

Two longitudinal tensile test specimens and three impact test specimens shall be taken from the test assembly as shown in Fig. 4.4.2.2.1. The specimens shall be cut out, prepared and tested according to 4.2.2.1.1 and 4.2.2.3, respectively.

The results of all tests shall comply with the requirements of Table 4.4.2.2.4 for the corresponding welding consumables grades.

4.5.3.3 Butt weld tests.

4.5.3.3.1 Preparation and manufacture of test assemblies.

To check the properties of a butt welded joint in each welding position, one test assembly as shown in Fig. 4.4.2.3.1 shall be welded for which the "wire — gas" combination shall be approved. The welding positions to be approved are usually limited to the downhand position only, and in this case only one test assembly is required for testing. The wire diameter and welding conditions (amperage, voltage, welding speed) shall comply with the manufacturer's recommendations.

The test assembly shall be prepared and manufactured according to 4.4.2.3.1.

4.5.3.3.2 Radiographic testing.

Prior to the preparation of specimens for mechanical testing, the radiographic testing of butt weld test assemblies is recommended for detecting any internal defects.

4.5.3.3.3 Mechanical tests.

As shown in Fig. 4.4.2.3.1 and in accordance with Table 4.4.1.4, from each butt weld test assembly the following specimens shall be taken:

two transverse flat tensile test specimens;

three transverse V-notched impact test specimens;

two transverse root and two transverse face bend test specimens.

The results of all tests shall comply with the requirements in Table 4.4.2.3.4 for the relevant welding consumable grades. The requirements for test procedure and their results evaluation shall meet the requirements in 4.2.

4.5.3.4 Tests for checking diffusible hydrogen content in deposited metal.

The tests for checking the diffusible hydrogen content in the deposited metal shall be carried out in compliance with the provisions in 4.2.3 and 4.5.1.4 relevant to the flux-cored wire intended for welding the higher strength steels of categories: 1Y, 2Y, 2Y40, 3Y, 3Y40, 4Y, 4Y40, and also 5Y and 5Y40.

Grade 2, 3 and 4 flux-cored wire intended for welding normal strength steels may be graded for the diffusible hydrogen content in the deposited metal as an option in accordance with the manufacturer's request.

The tests for checking diffusible hydrogen content in the deposited metal are generally conducted at the initial approval of welding consumables, and also, if specified in the test program approved by the Register, during annual tests.

4.5.4 Welding wire and "wire — gas" combinations for automatic two-run welding.

4.5.4.1 General requirements.

The approval tests of the automatic two-run welding shall be conducted in compliance with 4.4.3 using a flux-cored wire or "wire — gas" combinations for welding test assemblies. The required number of test assemblies and specimens taken from each assembly for testing shall be according to Table 4.4.1.4.

4.5.4.2 Butt weld tests.

4.5.4.2.1 Preparation and manufacture of test assemblies.

The test assemblies shall be prepared and manufactured considering the following requirements:

.1 to approve the "wire — gas" combinations for the automatic two-run welding, two butt weld test assemblies prepared and manufactured according to 4.4.3.1 and 4.4.3.2 shall be welded within the base metal thickness range of 12 to 15 mm, and 20 to 25 mm. Where approval is requested for welding plates over 25 mm thick, then two test assemblies shall be prepared, one of the metal of about 20 mm thick, and another of the metal of the maximum thickness to be approved;

.2 edge preparation on the butt weld test assemblies is shown in Fig. 4.5.4.2.1. Some minor deviations in edge preparation are allowed if recommended by the manufacturer. For the test assemblies of a metal over 25 mm thick, the edge preparation details shall additionally be submitted for information. The deviations or differences in edge preparation shall be justified by the manufacturer's recommendations as applied to the given welding technique and metal thickness;

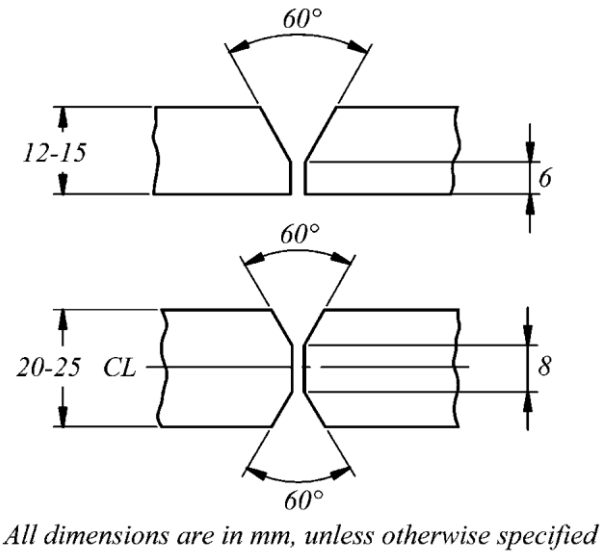

Fig. 4.5.4.2.1
Edge preparation recommended for butt weld test assemblies to approve "wire — gas" combinations for two-run welding

.3 diameters of the welding wire used for welding the test assemblies shall comply with the manufacturer's recommendations and be additionally submitted to the Register for information.

4.5.4.2.2 Radiographic testing.

Prior to the preparation of specimens for mechanical testing, the radiographic testing of butt weld test assemblies is recommended for detecting any internal defects.

4.5.4.2.3 Mechanical tests.

As shown in Fig. 4.4.3.2.1 and in accordance with Table 4.4.1.4, the test specimens, which type and number depend on the assembly thickness, shall be taken from each butt weld test assembly. The notch orientation and position on the specimens for impact testing shall be as shown in Fig. 4.4.3.2.3.

The results of all tests shall meet the requirements in Table 4.4.2.2.4 for longitudinal cylindrical tensile specimens and in Table 4.4.2.3.4 for the other types of specimens in accordance with the grade of the welding consumables to be approved.

The requirements for test procedure and their results evaluation shall meet the requirements in 4.2.

4.5.4.3 Chemical analysis of deposited metal.

Test specimens shall be taken from a test assembly for chemical analysis of the deposited metal on the side of the second run, and the results shall be recorded in a test report, if the chemical composition is regulated by the manufacturer's documentation (as a rule for flux-cored wire).

4.5.4.4 Tests for checking diffusible hydrogen content in deposited metal.

The tests for checking diffusible hydrogen content in the deposited metal shall be carried out according to 4.5.3.4.

4.5.5 Annual and upgrading tests.

4.5.5.1 Annual tests and re-approval surveys of the welding consumables manufacturers.

All the organizations recognized by the Register as welding consumable manufacturers to be used in "wire — gas" combinations shall be annually surveyed and their products shall be tested.

The annual tests shall, as a minimum, include the following:

.1 wires and combinations for semiautomatic multi-run or simultaneously for semiautomatic and automatic multi-run welding.

The extent of the annual tests for the wire and "wire — gas" combinations for the semiautomatic multi-run or simultaneously for semiautomatic and automatic multi-run welding shall include the preparation and tests of one deposited metal test assembly according to 4.5.2.2. The wire diameter shall correspond to the range of diameters specified in the Certificate for Approval of Welding Consumables for the semiautomatic welding. One longitudinal cylindrical tensile test specimen and three impact test specimens shall be tested, and the test results shall meet the requirements in Table 4.3.2.4.

The chemical analysis of the deposited metal shall be performed following the requirements for the initial approval if it is regulated by the manufacturer's documentation for the acceptance control of products (as a rule for flux-cored wire);

.2 wires and combinations for automatic multi-run welding.

The extent of the annual tests for the wire and "wire — gas" combinations for the automatic multi-run welding technique shall include the preparation and tests of one deposited metal test assembly according to 4.5.3.2. The wire diameter shall correspond to the range of diameters specified in the Certificate for Approval of Welding Consumables for the automatic welding. One longitudinal cylindrical tensile test specimen and three impact test specimens shall be tested, and the test results shall meet the requirements in Table 4.4.2.2.4.

The chemical analysis of the deposited metal shall be performed following the requirements for the initial approval if it is regulated by the manufacturer's documentation for the acceptance control of products (as a rule for flux-cored wire);

.3 wires and combinations for automatic two-run welding.

The extent of the annual tests for the wire and "wire — gas" combinations for the automatic two-run welding technique shall include the preparation and tests of one butt weld test assembly of 20 to 25 mm thick according to 4.5.4.2. Where approval is requested for the automatic two-run welding, one transverse tensile test specimen, two bend test specimens, three impact test specimens, and also one longitudinal tensile test specimen shall be tested. The wire diameter used in welding shall be recorded in the test report;

.4 for H10 and H5 flux-cored welding wires with the controlled diffusible hydrogen content, the check of welding consumables for the diffusible hydrogen content in the deposited metal according to 4.2.3 may be included in the annual test program on the Register's demand.

4.5.5.2 Upgrading tests.

During upgrading tests of the welding consumables the following shall be taken into account:

.1 where the upgrading deals only with the change of temperature when testing impact test specimens for the multi-run welding technique, the test extent is similar to the requirements in 4.3.8.2.2, and for the two-run welding technique, an additional (to the requirements in 4.5.5.1.3) butt weld test assembly 12 — 15 mm thick shall be prepared for testing three impact test specimens;

.2 where the upgrading deals with the extension of the range of approval to cover the welding of higher strength level steels, then for the multi-run welding technique, the butt weld test assemblies shall be tested to the full extent according to 4.5.2.3 or 4.5.3.3 in addition to the usual extent of annual testing. The total extent of tests (annual and additional for upgrading) for the two-run technique shall meet the requirements for the initial approval according to 4.5.4.

4.6 WELDING CONSUMABLES FOR USE IN ELECTROSLAG AND ELECTROGAS VERTICAL WELDING

4.6.1 General.

4.6.1.1 The requirements given below apply to the welding consumables intended for electroslag and electrogas vertical welding with forced weld forming with or without a consumable nozzle of hull structural steels, steel forgings and castings of the corresponding grades and of comparable steels intended for other structural applications.

The requirements on approval of welding consumables for the two-run welding according to 4.4.3 also apply for approval of the above-mentioned welding consumables, except the particulars listed in 4.6.2 which primarily deal with the number and type of specimens for mechanical tests and are taken from butt weld test assemblies.

4.6.1.2 The welding consumables for electroslag and electrogas welding depending on the weld metal strength level (R_{eH}, min) are divided into the following grades:

1, 2, 3 and 4 for normal strength steels;

1Y, 2Y, 3Y and 4Y for higher strength steels with the specified yield stress of up to 355 MPa, inclusive; 2Y40, 3Y40, 4Y40 and 5Y40 for higher strength steels with the specified yield stress of up to 390 MPa, inclusive.

The approval of welding consumables for grades 1Y, 2Y, 3Y,4Y, 2Y40, 3Y40, 4Y40 and 5Y40 may be restricted for their use only with the special types of higher strength steel which allow welding at the high values of heat input. Generally, such steels shall be tested in accordance with 2.2.3, Part III "Technical Supervision during Manufacture of Materials" of the Rules for Technical Supervision during Construction of Ships and Manufacture of Materials and Products for Ships, and shall have a relevant record in the grade designation (-W…). In this connection, the steels (usually niobium treated) corresponding in heat input to the technological process concerned shall be used in the approval testing.

In so doing, one should take into account that the above listed requirements for dividing into grades may, due to technical reasons, have limited application for the welding consumables in question.

4.6.1.3 Where welding consumables shall be approved for welding normal and higher strength steels simultaneously, two test assemblies of higher strength steel shall be welded and tested. Two additional assemblies of normal strength steel may also be tested.

4.6.1.4 Information and documentation to be submitted for review.

A manufacturer shall submit for review the following information and technical documentation attached to the request for approval:

commercial name, type of welding wire, limits of chemical composition for bare wires or type of additives in the case of flux-cored wires (or reference to the relevant normative document), range of wire diameters to be approved; producer, supplier, conditions of supply (surface condition, type, diameter and weight of the standard coils);

welding technique and combination grade, under which the approval is requested;

properties, composition and requirements relevant to the shielding gas or gas mixture; commercial brand and manufacturer in the case of gas mixtures of special types;

type of flux and other consumables if used;

type of current and range of current, for which the approval is requested;

main characteristics of the welding equipment;

typical chemical composition of the deposited metal;

main operating characteristics and welding techniques, associated recommendations and limitations in general and in particular as regards edge preparation and welding parameters;

manufacturer's workshop, manufacturing facilities, manufacturing and treatment cycles, methods and procedures of manufacturer's quality controls;

packaging and marking;

recommendations for storing and preservation of wires and fluxes;

information on approvals granted by other classification societies or technical supervisory bodies including copies of the required documents.

The technical documentation to be approved by the Register includes:

manufacturer's technical specifications or specifications for welding consumables, including its topical editions of catalogues;

instructions on manufacture, acceptance and quality control.

4.6.2 Butt weld tests.

4.6.2.1 Preparation and manufacture of test assemblies.

Two butt weld test assemblies, one of 20 to 25 mm thick and another of 35 to 40 mm thick or more (refer to Fig. 4.6.2.3-1), shall be tested to approve the welding consumables for electroslag and electrogas welding. The steel grade for preparing each of those test assemblies shall be selected in accordance with the instructions in Table 4.4.3.2.1 for two-run welding technique.

The chemical composition of the base metal for preparing the test assemblies, including the content of modifying (grain refining) elements, shall be given in a test report.

4.6.2.2 Radiographic testing.

Prior to the preparation of specimens for mechanical testing, the radiographic testing of butt weld test assemblies is recommended for detecting any internal defects.

4.6.2.3 Mechanical tests.

As shown in Fig. 4.6.2.3-1, the test specimens shall be taken for testing from each butt weld test assembly. The length of the test assembly shall be sufficient for sampling and preparing the following test specimens:

two longitudinal cylindrical tensile test specimens (2 LT);

two transverse flat tensile test specimens (2 TT);

two transverse side bend test specimens (2 TB);

two sets of three V-notch impact test specimens with the notch located as shown in Fig. 4.6.2.3-2;

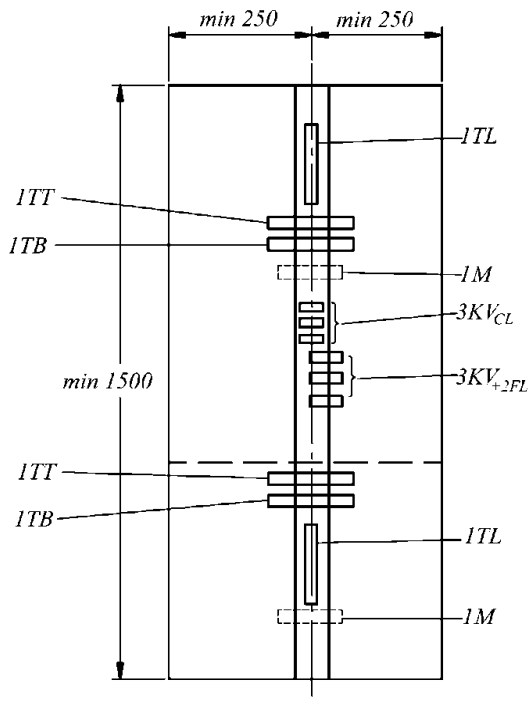

Fig. 4.6.2.3-1
Butt weld test assembly for testing to approve electroslag and electrogas welding.
Test specimens are designated according to 4.6.2.3

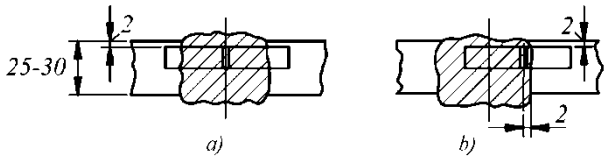

Fig. 4.6.2.3-2
Sketch for cutting-out and notch location for impact test specimens from the butt weld test assembly during test to approve electroslag and electrogas welding:
a — with the notch located in the centre of the weld (K_{VCL});
b — with the notch located in the weld at 2 mm from the fusion line (KV_{+2FL})

one set with the notch located in the centre of the weld ($3KV_{CL}$);

one set with the notch located at 2 mm from the fusion line in the weld metal (3*KV*+2*FL*);

one transverse macrosection (1M).

The results of all the tests shall meet the requi-rements in Table 4.4.2.2.4 for longitudinal cylindrical tensile test specimens and in Table 4.4.2.3.4 for the other types of test specimens according to the grade of the welding consumables to be approved.

The requirements for test procedure and their results evaluation shall meet the requirements in 4.2.

4.6.2.4 Chemical analysis of deposited metal.

Test specimens shall be taken from each test assembly for chemical analysis of the deposited metal, and the results shall be presented in a test report, if the chemical composition is regulated by the manufacturer's documentation.

4.6.3 Annual and upgrading tests.

4.6.3.1 Annual tests and re-approval surveys of the welding consumables manufacturers.

All the organizations recognized by the Register as welding consumables manufacturers for electroslag and electrogas welding shall annually be surveyed and their products be tested.

The annual tests shall include welding and testing of one butt weld test assembly of 20 to 25 mm thick according to 4.6.2.

The annual tests shall include welding and testing of the following types of specimens:

one longitudinal cylindrical tensile test specimen;

one transverse flat tensile test specimen;

two transverse side bend test specimens;

three V-notch impact tests specimens with the notch located in the centre of the weld (as shown in Fig. 4.6.2.3-2*a*);

three V-notch impact tests specimens with the notch located in the weld at 2 mm from the fusion line (as shown in Fig. 4.6.2.3-2*b*));

one transverse macrosection (1M).

The results of all the tests shall meet the requirements in Table 4.4.2.2.4 for longitudinal cylindrical tensile test specimens and in Table 4.4.2.3.4 for the other types of test specimens according to the grade of the welding consumables to be approved.

4.6.3.2 Upgrading tests.

Upgrading tests shall be conducted only on the basis of a manufacturer's request and preferred to be combined with the annual tests.

As a rule, all the tests of butt weld test assemblies required to approve electroslag and electrogas welding according to 4.6.2 shall be carried out in upgrading the welding consumables. In this case the test results obtained for the specific welding consumables when they were used in the approval of other welding techniques shall be ignored.

4.7 WELDING CONSUMABLES FOR WELDING HIGH STRENGTH STEEL

4.7.1 General.

4.7.1.1 The requirements of this Chapter supplement those in 4.3, 4.4 and 4.5 and specify the conditions for approval and testing of the welding consumables intended for welding high strength steels meeting the requirements in 3.13 and 3.19, Part XIII "Materials".

When the special requirements are lacking, the similar requirements for approval of the welding consumables for welding normal and higher strength hull structural steels shall apply.

4.7.1.2 The requirements of this Section are used for approval of the following types of welding consumables:

covered electrodes for manual arc welding (similar to 4.3);

"wire — flux" combinations for multi-run submerged arc welding (similar to 4.4.2);

"wire — gas" combinations for gas-shielded metal-arc welding (including tungsten inert gas welding — TIG); flux-cored wire with or without shielding gas for metal-arc welding.

4.7.1.3 The welding consumables for welding the high strength steels, complying with the requirements in 3.13 and 3.19, Part XIII "Materials", are divided into grades depending on the minimum yield stress of the base and deposited metals, as well as the temperature in impact testing the weld and deposited metal according to Table 4.1.2.3.

The designation of the welding consumable grade includes two groups of basic symbols:

3, 4 and 5 for designating the temperature during testing the impact test specimens for the deposited and weld metals;

Y42, Y46, Y47, Y50, Y55, Y62, Y69, Y89 and Y96 for designating the requirements for the minimum yield stress of the deposited metal.

For the welding consumables intended for welding high strength steels, the following additional symbols according to 4.1.2.6 are used:

H10 and H5 — for content of diffusible hydrogen in the deposited metal according to 4.2.3.4;

S — for approval of welding consumables for semiautomatic welding;

M — for approval of welding consumables for multi-run welding technique;

SM — for approval of welding consumables for semiautomatic and automatic multi-run welding technique.

4.7.1.4 The welding consumable grade shall be used and selected considering the grade the high strength steel to be welded and requirements in 2.2.5.

4.7.2 Deposited metal test.

4.7.2.1 Depending on the type of welding consumables and the degree of the welding procedure mechanization, the test assemblies of the deposited metal shall be welded in a downhand position following the relevant provisions in 4.3.2.1, 4.4.2.2.1 or 4.5.3.2.1. The high strength steel compatible in properties (refer to 4.7.1.4) with the weld metal shall be used as the base metal for preparing the test assemblies. As an alternative, the bevels of the test assembly of any grade metal shall be buttered with the welding consumables to be approved or with those similar in composition and properties.

4.7.2.2 Following the requirements in 4.3.2.2, 4.4.2.2.2, 4.5.2.2.2 or 4.5.3.2.2, the test assemblies shall be sampled for chemical analysis of the deposited metal including the content of all alloying elements and impurities if these regulated by documentation for the product manufacture and acceptance control. The analysis results shall be within the limits set by the standards or manufacturer's documentation.

4.7.2.3 Depending on the type of welding consumables and the degree of the welding procedure mechanization, test specimens shall be taken from the deposited metal test assemblies and prepared for the tests, which the type and number shall comply with the relevant requirements in 4.3.2.3, 4.4.2.2.3, 4.5.2.2.3 or 4.5.3.2.3.

4.7.2.4 The mechanical properties shall meet the requirements in Table 4.7.2.4. The requirements for test procedure and results evaluation shall comply with the provisions in 4.2.

Table 4.7.2.4

Grade		Yield stress Re, MPa, min.	Tensile strength Rm, MPa	Elongation A5 (L0 = 5d), % min.	Impact test	
					Test temperature, °C	Impact energy KV, J, min.
3	Y42	420	530 — 580	20	–20	47
4					–40	
5					–60	
3	Y46	460	570 — 720	20	–20	47
4					–40	
5					–60	
3	Y47	460	570 — 720	19	–20	64
3	Y50	500	610 — 770	18	–20	50
4					–40	
5					–60	
3	Y55	550	670 — 830	18	–20	55
4					–40	
5					–60	
3	Y62	620	720 — 890	18	–20	62
4					–40	
5					–60	
3	Y69	690	770 — 940	17	–20	69
4					–40	
5					–60	
3	Y89	890	940 — 1100	14	–20	69
4					–40	
3	Y96	960	980 — 1150	13	–20	69
4					–40	

4.7.3 Butt weld tests.

4.7.3.1 Depending on the type of welding consumables and the degree of the welding procedure mechanization, the butt weld test assemblies according to the relevant provisions in 4.3.3.1, 4.3.3.2, 4.4.2.3.1, 4.5.2.3.1 or 4.5.3.3.1 shall be prepared and welded. For welding consumables, application for approval of which is dated 1 July 2019, the high strength steel with the proper values of the minimum yield stress and tensile strength and compatible in impact toughness indices with the welding consumables to be approved shall be used as the base metal for preparing the test assemblies (refer to 2.2.5).

For welding consumables, application for approval of which is dated on 1 July 2019 or after this date, the high strength steel with the proper values of the minimum yield stress and tensile strength and compatible in impact toughness indices, matching the consumable grade being approved shall be used as the base metal for preparing the test assemblies (refer to 2.2.5).

4.7.3.2 Depending on the type of welding consumables and the degree of the welding procedure mechanization, test specimens shall be taken from the butt weld test assemblies and prepared for the tests, which the type and number shall comply with the relevant requirements in 4.3.3.4, 4.4.2.3.3, 4.5.2.3.3 or 4.5.3.3.3. Prior to the preparation of test specimens, the radiographic testing of the butt weld test assemblies is recommended for checking the presence of any internal defects.

4.7.3.3 The mechanical properties shall meet the requirements in Table 4.7.3.3. The requirements for test procedure and results evaluation shall comply with the provisions in 4.2.

Table 4.7.3.3

Grade		Tensile strength Rm, MPa, min.	Impact test		Bend test	
			Test temperature, °C	Impact energy KV, J, min.	Bend angle, deg1)	Ratio D/t2)
3	Y42	530	–20	47	120	4
4			–40			
5			–60			
3	Y46	570	–20	47		4
4			–40			
5			–60			
3	Y47	570	–20	64		4
3	Y50	610	–20	50		4
4			–40			
5			–60			
3	Y55	670	–20	55		5
4			–40			
5			–60			
3	Y62	720	–20	62		5
4			–40			
5			–60			
3	Y69	770	–20	69		5
4			–40			
5			–60			
3	Y89	940	–20	69		6
4			–40			
3	Y96	980	–20	69		7
4			–40			

1) The bend angle achieved before the origination of the first crack. Minor weld defects less than 3 mm long revealed on the specimen surface are acceptable.
2) *D* mandrel diameter, *t* specimen thickness.

4.7.3.4 Where the bend angle required in Table 4.7.3.3 is not achieved until the first crack, the specimen may be considered as satisfactory tested (meets the specified requirements) if the elongation measured on the gauge length L_0 of the bend test specimen meets the requirements in Table 4.7.2.4 for the minimum elongation value for cylindrical tensile test specimens. The gauge length is determined from the relationship $L_0 = L_S + t$ where L_S — the weld width, t — the specimen thickness (refer to Fig. 4.7.3.4).

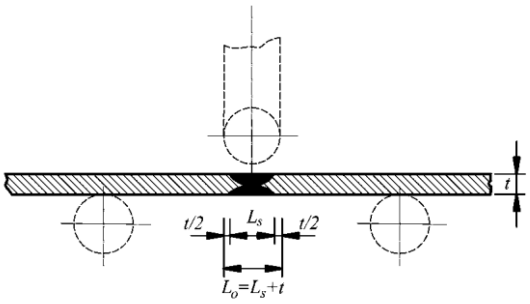

Fig. 4.7.3.4
Sketch for determination of the gauge length L_0 to determine elongation value during bend tests

4.7.4 Tests for checking diffusible hydrogen content in the deposited metal.

4.7.4.1 The all grades welding consumables for welding high strength steels, except "solid wire — gas" combinations, shall be subjected to tests for checking diffusible hydrogen content in the deposited metal using the following methods:

vacuum-mercury method complying with the requirements of ISO 3690;

vacuum method complying with the requirements in GOST 23338 (method 2);

chromatographical method complying with the requirements in GOST 23338 (method 1) or the Register-agreed procedure. In the latter case the cooling rate and the time for specimens preparation, and also the diffusible hydrogen amount to be determined shall be comparable with those specified in the reference method according to ISO 3690.

4.7.4.2 The diffusible hydrogen content in the deposited metal checked according to 4.2.3 shall not exceed the limits in Table 4.7.4.2.

Table 4.7.4.2

Grade by yield stress value	Classification symbols by diffusible hydrogen content	Maximum hydrogen content, cm3 per 100 g of deposited metal
Y42 Y46 Y47 Y50	H10	10
Y55 Y62 Y69 Y89 Y96	H5	5

4.7.5 Annual tests.

All the organizations recognized by the Register as welding consumables manufacturers shall be annually surveyed and their products be tested. Depending on the type of welding consumables and the degree of the welding procedure mechanization, the annual test extent includes welding the deposited metal test assemblies and carrying out the tests according to the relevant provisions in 4.3.8.1.1, 4.4.4.1.1, 4.5.5.1.1 or 4.5.5.1.2 with due regard to additional requirements in 4.7.2. For welding consumables of grades Y69 and Y96, annual test of materials for diffusible hydrogen content in the deposited metal shall be included into the test program in accordance with 4.2.3.

4.8 WELDING CONSUMABLES FOR WELDING OF CORROSION-RESISTANT (STAINLESS) STEEL AND FOR SURFACING

4.8.1 General.

4.8.1.1 The present requirements apply to welding consumables intended for welding of corrosionresistant (stainless) steels meting the requirements of 3.16, Part XIII "Materials", also for metal deposition to ship machinery items.

This Chapter contains provisions related to approval and testing of welding consumables. When preparing the test assemblies and conducting individual types of tests, one shall be guided by respective provisions of 4.2.

4.8.1.2 The welding consumables for welding of corrosion-resistant steels are divided into grades depending on the structure and composition of steels to be welded in accordance with directions of Table 4.8.1.2. It is assumed that the weld metal has the alloying system similar to that of the base metal and provides mechanical properties and corrosion resistance identical to those of the base metal.

Table 4.8.1.2

Grade of welding consumable	Welded steel			Scope of application1	
	Designation of typical composition	AISI/UNS	National brands	AISI/UNS	National brands
M-1	x20Cr13; x30Cr13	410, 420	20X13, 30X13	410, 420	20X13, 30X13
	x7CrNiNb 16 4	–	07X16H4Б,07X16H4	–	07X16H4Б,07X16H4
MF-2	x10CrNi 13 1	414, 410S	08X14НДЛ, 05X12H2T	414, 410S	08X14НДЛ, 05X12H2T
	x10 Cr Ni 15 4	429	08X15H4ДМЛ	429	08X15H4ДМЛ
	x15 Cr Ni 17 2	431	14X17H2	431	14X17H2
F-3	x8CrTi 17	430T	08X17T	430T	08X17T
AM-4	x8CrNiTi 17 6	–	08X17H6T	–	08X17H6T
A-5	x3CrNi 19 11	304L	03X18H11, 03X18H12	304L	03X18H11, 03X18H12
	x3CrNiN 19 11	304LN	–	304LN, 304L	Ditto
	x8CrNi Ti 18 11;	321	08X18H10T, 12X18H10T	321, 347, 304LN, 304L	Ditto +08X18H10T, 12X18H10T, 08X18H12Б
	x8CrNi Nb18 11	347	08X18H12Б	321, 347, 304LN, 304L	Ditto +08X18H10T, 08X18H12Б
A-6	x3CrNiMo 19 11 3	316L	03X17H14M3	304L, 316L	03X18H11, 03X18H12, 03X17H14M3
	x3CrNiMo 19 13 4;	317L	–	304LN, 304L, 316LN, 317L	Ditto
	x3CrNiMoN 19 11 3	316LN	–	321, 347, 304LN, 304L, 316LN, 317L, 316Ti, 316Nb	Ditto +08X18H10T, 08X18H12Б
	x3CrNiMoN 19 13 4	317LN		321, 347, 304LN, 304L, 317LN, 316LN, 317L, 316Ti, 316Nb	Ditto +08X18H10T, 08X18H12Б
A-7ss	x2CrNiMoCu 21 25 5 2	N 08904 (904L)	–	N 08904 (904L)	–
	x2CrNiMoCuN 20 18 6 1	S 31254	–	S 31254	–
AF-8dup	x3CrNiMoN 22 5 3	S 31803	03X22H6M2; 08X22H6M2	S 31803	08X22H6M2
	x3CrNiMoWCuN 25 7 3	S31260	08X21H6M2T	S31260, S 31803	08X22H6M2, 08X21H6M2T
	x4CrNiMoCuN 26 6 4 2	S 32550;	–	S 32550, S32760	–
	x3CrNiMoN 26 8 5;	S32750;	–	S 32550, S32750, S32760	–
	x3CrNiMoWCuN 26 8 4 11	S32760	–	S 32550, S32760	–
A-9sp	x8CrNi 24 14	309	–	309, 309L, 309Mo, 309S, 309SCb	–
	Dissimilar joints, e.g. D40+A-6, etc. Weld metal composition: x2CrNi 24 12; x10CrNi 24 12; x8CrNiMo 23 13; x10CrNiMo 24 13 2 and the like			Dissimilar welded joints. Intermediate (transition) layers for stainless liners including intermediate runs of clad steel joints.	
A-10sp	Dissimilak joints, e.g. E500 + AF-8 etc. Weld metal composition: x9CrNiMoMnN 16 25 6 2 x9CrNiMoMnVN 16 25 6 2 1			Dissimilar welded joints. Intermediate (transition) layers for stainless liners including intermediate runs of clad steel joints. Welding of grade M-1, MF-2, F-3 and AM-5 steels, as well as limited weldability steels without heating.	
	x1CrNi 26 22, x10CrNi 26 22			Ditto + welding of type 310 and 310Mo steels	

[1] The scope of application is valid under the condition of meeting the requirements for the mechanical properties of the deposited metal and welded joint according to Tables 4.8.4.1-1 and 4.8.4.1-2.

In cases, when the welding consumables are employed for deposition or for welding dissimilar joins, the classification presented in Table 4.8.1.2 is retained, but serving as the basis

for it is the chemical composition and structure of the deposit or weld metal (and not of assembled or deposited parts).

4.8.1.3 Designation of the grade of welding consumables intended for welding of corrosion-resistant steels and for deposition shall include, additionally, identification (in brackets) of typical (brand) chemical composition of deposited metal, as specified in 3.16.1.1, Part XIII "Materials" for steels.

Example: A-6 (x5CrNiMo 19 11 3), where:

A-6 is a grade of welding consumable according to classification given in Table 4.8.1.2;

x5 is carbon fraction of total mass, in %;

Cr, Ni, Mo are symbols of respective alloying elements (chrome, nickel, molybdenum);

19, 11, 3 are fractions of total mass of the above alloying elements (Cr, Ni and Mo, respectively).

4.8.1.4 The requirements of this Chapter apply to the following welding consumables and welding processes:

coated electrodes for manual arc welding;

combinations "wire — flux" for automatic and semi-automatic welding;

combinations "strip — flux" for automatic deposition;

combinations "wire — gas" for semi-automatic and automatic active and inert-gas metal-arc active or inert-gas welding;

combinations "wire — gas" for automatic tungsten inert-gas arc welding;

combinations "rod — gas" for manual tungsten inert-gas welding; combinations "wire — gas" for automatic inert-gas plasma-arc welding; flux cored wire for automatic and semi-automatic metal arc welding with or without gas shield.

4.8.1.5 The requirements for welding consumables' approval procedure and also for survey of manufacturers and procedure of issuing the Certificates of Approval of Welding Consumables shall comply with the directions of 4.1.

4.8.2 Scope and types of tests for welding consumables.

4.8.2.1 Welding consumables for welding of corrosion-resistance steels.

As a rule, the welding consumables intended for welded joints on corrosion-resistant steels shall be subjected to the following tests:

for determination of deposited metal properties;

for determination of butt-welded joint properties;

testing of weld metal for resistance to intercrystalline corrosion (ICC);

testing for resistance to hot cracking.

For respective grades of welding consumables, as required in accordance with the range of approval requested by the manufacturer, additional corrosion tests are conducted. For example:

determination of resistance to pitting corrosion initiated by chlorides (sea water);

testing on stress-corrosion cracking in environments containing hydrogen sulphide at room and higher temperatures, etc.

Actual scope of tests for different grades of welding consumables intended for welding of corrosionresistant steels shall be defined in accordance with the requirements of Table 4.8.2.1.

4.8.2.2 Welding consumables for deposition of corrosion-resistant cladding layers.

The welding consumables intended for deposition of corrosion-resistant cladding layers to ship machinery items, as a rule, shall be subjected to the following tests:

for determination of deposited metal properties;

for determination of technological strength of the cladding layer in static bending tests;

testing of cladding metal layer for resistance to intercrystalline corrosion;

testing for resistance to hot cracking.

Additional corrosion tests of the cladding layer are conducted in accordance with a separate requirement of the Register in compliance with the directions of 4.8.2.1.

Actual scope of testing for welding consumables of different grades intended for deposition jobs shall be determined in accordance with the requirements of Table 4.8.2.2.

Table 4.8.2.1

Scope and types of tests of welding consumables for corrosion-resistant steels

Types of test assembly and characteristics to be determined	Grades of welding consumables									
	M-1	MF-2	F-3	AM-4	A-5	A-6	A-7	AF-8	A-9sp	A-10sp
Test assembly of deposited metal:										
R_m	+	+	+	+	+	+	+	+	+	+
$R_{p0,2}$	+	+	+	+	+	+	+	+	+	+
$R_{p1,0}$	–	–	–	–	+	+	–	–	–	–
A_5	+	+	+	+	+	+	+	+	+	+
KV^{+20}	+	+	+	+	+	+	+	+	+	+
KV below zero	–	–	–	–	+	+	–	–	–	–
chemical composition of deposited metal	+	+	+	+	+	+	+	+	+	+
Test assembly of butt weld:										
$R_m^{cond.}$ with recording of specimen failure point location	+	+	+	+	+	+	+	+	+	+
angle of V-bend in static bending test	+	+	+	+	+	+	+	+	+	+
weld metal resistance to ICC (intercrystalline corrosion)	+[1]	–	+	+	+	+	+	+	+[1]	+[1]
weld metal resistance to pitting corrosion	–	–	–	–	–	–	+	+	–	–
weld metal resistance to stress corrosion in presence of hydrogen sulphide	–	–	–	–	–	–	+	+	–	–
α-phase content in weld metal	–	–	–	–	+	+	–	+	+	–
Technological test assembly for determination of tendency to hot cracking[2]	+	+	+	+	+	+	+	+	+	+
Multilayer deposition[3]:	–	–	–	–	+	+	–	+	+	–
α-phase content										
chemical check analysis	+	+	+	+	+	+	+	+	+	+
resistance of deposited metal to ICC	+[1]	–	+	+	+	+	+	+	+[1]	+[1]

[1] Tests for resistance to ICC are conducted only for welding consumables, the composition which, as guaranteed by the manufacturer, ensures the required properties, for example, M-1 (X7CrNiNb 164), A-9sp (X2CrNiNb 24 12), A-10sp (X1CrNi 26 22).

[2] By agreement with the Register the tee-joint test assembly may be replaced by layer-by-layer control of other types of test assemblies.

[3] The multi-layer deposition is performed in accordance with a separate Register requirement, for example, when it is necessary to carry out a check analysis of α-phase content using the volumetric magnetic method.

Table 4.8.2.2

Scope and types of tests of welding consumables for deposition to ship machinery items

Type of test assembly and characteristics to be determined	Grades of welding consumables					
	A-5	A-6	A-7	AF-8	A-9sp	A-10sp
Deposited metal test assembly[1]:						
R_m	+	+	+	+	+	+
$R_{p0,2}$	+	+	+	+	+	+
$R_{p1,0}$	+	+	–	–	–	–
A_5	+	+	+	+	+	+
$KV^{+20°}$	+	+	+	+	+	+
Chemical composition of deposited metal	+	+	+	+	+	+
Simulation test assembly of cladding deposit:						
static bending test	+	+	+	+	+[2]	+[2]
α-phase content	+	+	–	+	+	–
chemical check analysis	+	+	+	+	–	–
resistance of deposited metal to ICC	+	+	+	+	+[3]	+[3]
resistance of cladding metal to pitting corrosion	–	–	+	+	–	–
resistance of deposited metal to stress corrosion in presence of hydrogen sulphide	–	–	+	+	–	–
layer-by-layer checking for appearance of hot cracks	+	+	+	+	+	+

[1] For combinations "strip – flux" the specimens intended for determination of the above characteristics shall be taken from multilayer deposited metal.
[2] Tests shall be carried out using combinations with other consumables forming the clad layer.
[3] The test for resistance to ICC is mandatory, when the range of approval requested by the manufacturer includes both the transition and main layers of the deposited metal consisting of corrosion-resistant material of type A-9sp (X2CrNiNb 24 12), A-10sp (X1CrNi 26 22).

4.8.3 Requirements to preparation of test assemblies.

4.8.3.1 General.

The types of test assemblies and requirements to their manufacture, in accordance with directions of 4.2, are also valid for welding consumables intended for welding of corrosion-resistant steels and deposition operations.

In addition to those the following specific features of application of high-alloy welding consumables shall be taken into account:

possibility of lower resistance to inter-crystalline corrosion in the heat-affected zone of the base metal, especially in welding with high heat input;

increased tendency of high-alloy weld metal to hot cracking in comparison with low-alloy welding consumables;

higher degree of weld metal contraction in comparison with low-alloy welding consumables and, as a result, considerable angular and linear strains in the process of welding;

higher yield of melted metal requiring limitation of the melted weld pool volume and use of smaller diameter welding wire in comparison with low-alloy materials in identical conditions of welding;

higher specific resistance and lower values of thermal conductivity of high-alloy welding consumables, which requires limitation of the current unit load.

4.8.3.2 Testing of deposited metal.

To test the deposited metal, the following test assemblies shall be prepared and welded in downhand position:

one test assembly, as shown in Fig. 4.3.2.1, intended for manual and semi-automatic welding;

one test assembly, as shown in Fig. 4.4.2.2.1, intended for automatic welding.

As the base metal for preparation of the test assemblies a steel shall be used, which corresponds to the grade of welding consumable indicated in Table 4.8.1.2. As an alternative for preparation of the test assemblies, hull structural steel of normal or higher strength of any grade may be used, with preliminary facing of weld edges with welding consumables to be

certified or of similar grade. As shown in Fig. 4.8.3.2, three layers shall be deposited: the first one with consumables for padding of transition layers of Grade A-9sp or A-10sp, and then two cladding layers, using the welding method and consumables to be certified.

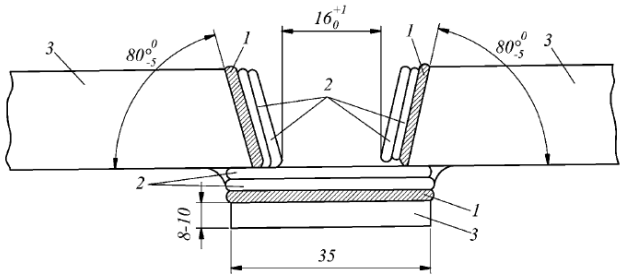

Fig. 4.8.3.2
Diagram of edge preparation by deposition for testing of deposited metal
1 — transition layer/backing (welding consumables of Grades A-9sp and A-10sp);
2 — main cladding layer (welding consumables to be certified);
3 — base metal (steel of normal or higher strength)

In this case the deposition by submerged arc (combination "wire — flux") may be replaced with deposition of the cladding layer using combination "wire — gas" or coated electrodes of similar grade and of similar chemical composition.

After deposition of metal layers to the edges of the weld it is recommended to dress the buttered edges with abrasive tools or to perform machining of the edges and the backing strip to restore the geometrical parameters of the prepared edges shape.

For welding of the assembly with deposited metal it is recommended, depending on the welding process and type employed to select the welding wire (or filler rods) with diameter corresponding to values indicated in Table 4.8.3.2. The welding conditions shall comply with directions of the welding consumables manufacturer and with the technical documentation for welding of structures approved by the Register.

Table 4.8.3.2

Welding type	Welding process (standard ISO 4063)	Diameter of welding wire (rod), mm	
		for facing of edges	for filling of the groove
Manual	111	2,5 — 3,0	3,0 — 4,0
Automatic	12	2,0	2,5 — 3,2
Semi-automatic and automatic	131	1,0 — 1,2	1,4 — 1,6
	135	1,0 — 1,2	1,4 — 1,6
Manual	141	2,0 — 2,4	2,5 — 3,2
Automatic	141	1,0 — 1,6	1,2 — 1,6
Automatic and semi-automatic	114	0,9 — 1,4	1,2 — 1,6
	136	0,9 — 1,2	1,2 — 1,6
	137	0,9 — 1,2	1,2 — 1,6
Manual	15	2,0 — 2,4	2,0 — 3,0
Automatic	15	1,0 — 1,2	1,2 — 1,6

Heat treatment after welding of deposited metal assemblies is not used normally. Exception is made for welding consumables employed for metal deposition on ship machinery articles. In this case the assemblies are subjected after welding to imitated single-time tempering of welded joint at 630 to 650 °C during 40 min with subsequent cooling in the air. The temperature inside the furnace before loading of the specimens shall not exceed 350 °C.

4.8.3.3 Butt weld tests.

To determine the weld properties, it is necessary to carry out welding of assemblies, the quantity and dimensions of which are indicated in 4.2 for respective welding consumables and welding processes. The quantity of test assemblies may be reduced within the following limits:

for welding consumables intended for downhand welding only one test assembly is sufficient;

for combinations "wire — gas" (131, 135, 141 and 15 by ISO 4063) two assemblies are required. In this case the properties of butt welds shall be determined with respect to downhand and vertical (vertical-upward) welding positions.

For welding of joint assemblies it is recommended to use welding wire with diameters, as specified in Table 4.8.3.2:

for root passes follow the directions given for facing of edges of deposited metal test assemblies;

for filling of the grooves follow the respective directions for deposited metal test assemblies.

The butt-welded test assemblies shall be prepared using the steel of the same grade, which is specified for the welding consumables. When selecting the base metal for a butt-welded test assembly, one shall take into account the necessity to ensure the level of the weld properties specified in Table 4.8.4.1-2 for the grade of welding consumables to be certified.

For welding consumables of Grades A-9sp and A-10sp intended for dissimilar joints and deposition of intermediate layers, the butt-welded test assemblies may be prepared in two ways:

one side of the test assembly is produced from corrosion-resistant steel of Grade A-5 or A-6, the other side from higher or high strength steel with ultimate breaking strength at least equal to that of deposited metal;

both sides of the test assembly are produced from higher or high strength steel with the level of strength corresponding to the welding consumable to be certified.

4.8.3.4 Hot cracking test.

The welding consumables intended for corrosion-resistant steels shall be subjected to hot cracking test estimated on test results of tee-joint test assemblies. In case of manual or semi-automatic welding for each welding consumable to be approved, three test assemblies shall be welded, their dimensions as shown in Fig. 4.2.4.1, in case of automatic welding — one test assembly of L ≥ 500 mm shown in Fig. 4.2.5.

The base metal for manufacture of test assemblies, as well as diameters of welding wire/rods, shall be selected as specified in 4.8.3.3.

For welding consumables intended exclusively for deposition operations, manufacture of tee-joint test assemblies may be omitted. In this case the resistance to hot cracking is estimated with the use of layer-by-layer control method for the deposited metal and also in the process of side-bend testing of specimens with cladding deposit.

4.8.3.5 Static bending test for fusion-clad layers.

4.8.3.5.1 Bend testing of fusion-clad layers is performed for estimation of clad layer plastic properties, bond surface, as well as heat affected zone.

This type of testing may be done in the following ways:

bending with tensioning of the clad layer (the load is applied normally to the bond surface) and with strain orientation normally to the direction of welding in the process of deposition;

bending with tensioning of the clad layer (the load is applied parallel to the bond surface) and with strain orientation along the direction of welding in the process of deposition;

side-bend testing of specimens (the load is applied parallel to the bond surface). In this case the bending load may either coincide with the direction of welding, or be perpendicular to it.

Testing of fusion-clad layer shall be performed by side-bend method with the load applied normally to the direction of welding. In static bending other types of tests employed, as required by the Register in cases of ambiguity of the main test results.

N o t e . The side-bend testing with load application parallel to the direction of welding is performed, as a rule, in approval of welding deposition procedures, as this is the most objective method for estimation

of internal defects (poor fusion, cracks, etc.) caused directly by technological factors.

4.8.3.5.2 To conduct static bending test of fusion-clad layers, an assembly-imitator of the cladding deposit shall be manufactured, as required by 4.8.3.5.2. The cladding layer shall be deposited on hull structural steel of any grade of higher or high strength ensuring proper testing with a mandrel of required diameter (refer to Fig. 4.8.4.2). The deposition shall be performed with observation of the requirements and recommendations given below.

The first layer (sublayer) shall be deposited using welding consumables of group A-9sp. The thickness of the first layer shall be 3 to 4 mm. The corrosion-resistant deposit shall be made with welding consumables to be approved in 2 or 3 layers, with overlapping of the beads. The plan of deposition beads application shall keep deformation of the main plate to a minimum. The total thickness of the cladding layer after machining shall not exceed 10 mm.

The arrangements for static bending specimens cutting from the imitation test assembly are shown in Fig. 4.8.3.5.2.

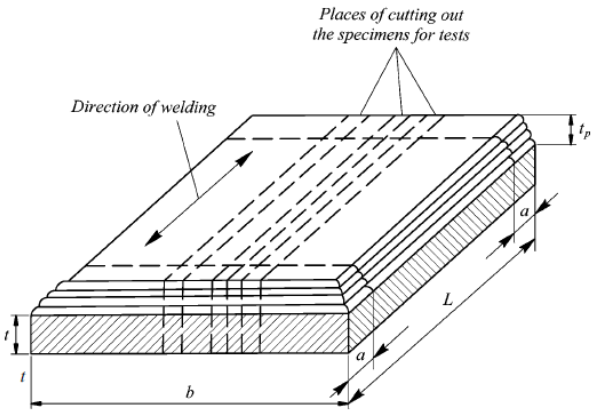

Fig. 4.8.3.5.2
Assembly imitating cladding deposit
t — thickness of base metal; t_p — thickness of cladding layer after machining; b — width of assembly; L — length of assembly; a — waste

N o t e . Requirements to dimensions, in mm:
a) for manual and semi-automatic deposition:
$t = 14 - 16, 6 \leq t_p \leq 10,\ b \geq 60,\ L \geq 200, a \approx 25;$
b) for automatic submerged-arc deposition with welding wire:
$t = 16 - 20, 6 \leq t_p \leq 10,\ b \geq 100,\ L \geq 480, a \approx 50;$
c) for automatic submerged-arc deposition with strip electrode:
$t = 16 - 20, 6 \leq t_p \leq 10,\ b \geq 120,\ L \geq 480, a \approx 50.$

If the range of approval for welding consumables permits heat treatment of fusion-clad items, the imitation assembly, before cutting the specimens out of it, shall be subjected to single-time tempering at 630 to 650 °C during 40 min with subsequent cooling in the air. To avoid distortion of the plate, the temperature in the furnace at loading of the test assembly into it shall not exceed 350 °C. Depending on the range of approval requested by the manufacturer the following ways of heat treatment are possible:

after deposition of intermediate layer;

after deposition of intermediate layer and of all cladding layers;

two-stage heat treatment: after deposition of sublayer, then after deposition of all cladding corrosion-resistant layers.

4.8.3.6 Test assemblies for preparation of specimens tested for resistance to intercrystalline corrosion.

In testing of welding consumables resistance to ICC may be estimated using specimens of weld metal or deposited metal. In such circumstances the testing of consumables employed exclusively for deposition jobs (for example, for compositions "strip-flux") may be limited to deposited metal only. In all other cases, unless otherwise agreed upon with the Register, used as the main method of testing for resistance to ICC shall be the method that involves testing of the weld metal in accordance with directions of 4.8.3.6.1.

4.8.3.6.1 Butt joint test assembly for testing of weld metal resistance to ICC.

Testing for resistance of weld metal to ICC shall be carried out by welding of test assemblies having dimensions as shown in Fig. 4.8.3.6.1.

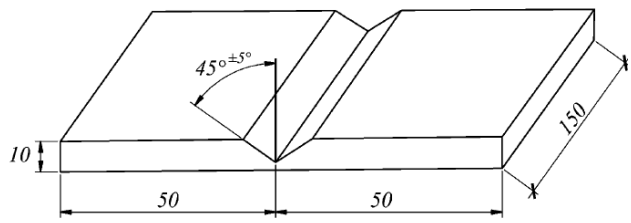

Fig. 4.8.3.6.1
Welded joint test assembly for cutting out specimens to be tested for resistance to ICC

In automatic and mechanized welding types the beginning and the end of the weld shall be executed on extended backing strips with dimensions ensuring steady welding procedure and absence of inadmissible defects on the controlled length of the test assembly (but not less than 100×100×10 mm).

The backing strip edge preparation shall have a depth of not less than 6 mm and groove angle similar to that of the test assembly (90°).

Used as the base metal shall be a corrosion-resistant steel complying in its grade and chemical composition with the filler material to be approved. The following limitations shall be observed in the process:

the corrosion-resistant steel shall be also resistant to ICC, even after provoking heating;

the base metal shall provide satisfactory results in bend-over tests when using a mandrel of the required diameter;

the mechanical properties of the base metal shall ensure uniform distribution of the residual plastic strain over the weld and near-weld area when testing static bending specimens.

To fully meet the above requirements to the base metal, it is permitted to use plates of corrosion-resistant steels differing in grade from the filler material under condition that plate edges are buttered previously with tested filler materials (or materials similar in chemical composition).

The Register may require heat treatment after welding, if this appears necessary for the range of approval requested by the manufacturer of the materials.

4.8.3.6.2 Test assembly for deposited metal testing for resistance to ICC.

The checking of deposited metal in the cladding layer for resistance to ICC shall be conducted on the checking test assemblies prepared with the use of welding consumables to be certified. General requirements for welding of the test assemblies are similar to those indicated in 4.8.3.2 and 4.8.3.5. The test assemblies are manufactured by downhand arc deposition of metal to a plate with thickness of at least 20 mm made of steel of any grade/brand. Dimensions of the checking test assemblies shall ensure stability of the deposition process, as well as a possibility to produce four specimens to be tested for resistance to ICC and a possibility of repeated testing of the twice this number of specimens.

The need for heat treatment of the test assemblies before testing for resistance to ICC depends on the range of approval requested by the applicant (as required in 4.8.3.5.2). The conditions and quantity of heat treatments for test assemblies to be tested for resistance of the deposited metal to ICC shall be additionally approved by the Register. As a rule, if a heat treatment after deposition of the main layer is permitted by the manufacturer of welding consumables or by the documentation for their application, the checking test assembly or blanks of specimens (prior to mechanical finishing) shall be subjected to two-time tempering at 630 to 650 °C during 40 min with subsequent cooling in the air.

The arrangement for cutting of ICC specimens and dimensions of the deposit shall be in accordance with directions of Fig. 4.8.3.6.2.

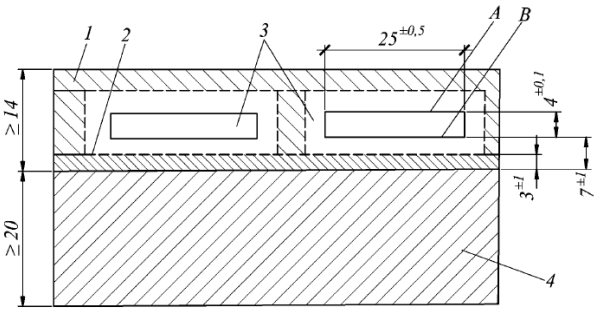

Fig. 4.8.3.6.2
Arrangements for cutting out the specimens when testing the deposited metal for resistance to ICC:
1 — deposited metal of the main layer; 2 — metal of deposited sublayer; 3 — blanks for preparation of specimens; 4 — base metal (plate); A and B — specimen surfaces

4.8.4 Methods of testing and evaluation of test results.

4.8.4.1 Determination of mechanical properties of deposited metal and welded joint.

Cut out from the deposited metal test assembly and tested shall be longitudinal cylindrical proportional specimens, shown in Fig. 2.2.2.3 (*a*), Part XIII "Materials" and having dimensions:

$d_m = 10$ mm, $L_m = 50$ mm, L_c =60 mm and $r \geq 5$ mm.

The longitudinal axis of the specimen shall coincide with the centre of the weld and the middle point of the metal deposit thickness. One specimen is required (when testing specimens with working part diameter of 6 mm, three specimens from each test assembly shall be tested).

The impact energy for deposited metal is determined on V-notch specimens meeting the requirements of 2.2.3, Part XIII "Materials". The plan of specimens cutting out is shown in Fig. 4.2.3.2.2-1. Three specimens are taken from each test assembly.

A butt weld test assembly is employed for preparation and testing of:

2 transverse flat fracture specimens with dimensions as shown in Fig. 4.2.2.1;

2 transverse static bend specimens in accordance with Fig. 2.2.5.1, Part XIII "Materials" complying with the directions of 4.2.2.2.2 (specimen dimensions: $a_m = t$ — thickness of the test assembly metal, b_m =30 mm);

3 Charpy impact test specimens. They shall be cut out as shown in Fig. 4.2.3.2-1, their type shall meet the requirements of 2.2.3, Part XIII "Materials".

For dissimilar welded joints, made with the use of welding consumables of Grade A-9sp or A-10sp, in static bending tests instead of transverse specimens longitudinal specimens shall be used, in compliance with Fig. 4.8.4.1. Length of the test assembly shall be sufficient for manufacture of such specimens.

General requirements for test procedures and for evaluation of test results are given in 4.2.3, and criteria for evaluation of test results are contained in Tables 4.8.4.1-1 and 4.8.4.1-2.

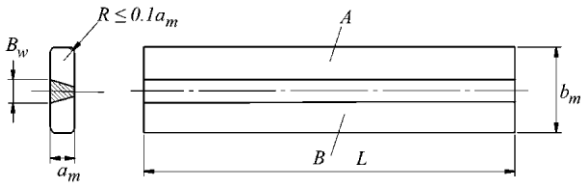

Fig. 4.8.4.1
Specimen with longitudinal weld for static bend testing of metal of dissimilar welded joint:
A — part of the test assembly made of corrosion-resistant steel;
B — part of the test assembly made of higher or high strength hull structural steel; $a_m = t$ — thickness of base metal; $b_m =$ 30 mm but not less than ($B_w + 24$) mm; $L \ge D_m + 9a_m \approx 12a_m$, where D_m is diameter of mandrel used in bending tests

Table 4.8.4.1-1

Requirements for mechanical properties of deposited metal

Grade of welding consu-mable	Designation of typical chemical composition of weld metal corresponding to base metal	Static tensile test				Impact test		Range of approval	
		$R_{p0,2}$, MPa	$R_{p1,0}$, MPa	R_m, MPa	A_5, %	Tempe rature, °C	*KV*, J, min.	AISI/UNS	National steels
		min							
M-1	x20Cr13; x30Cr13	410	–	650	16	+20	60	410, 420	20Х13, 30Х13
	x7CrNiNb 16 4	735	–	850	13	+20	60	–	07Х16Н4Б,07Х16Н4
MF-2	x10CrNi 13 1	460	–	590	16	–10	20	414, 410S	08Х14НДЛ, 05Х12Н2Т
	x10 Cr Ni 15 4	550	–	750	12	–10	30	429	08Х15Н4ДМЛ
	x15 Cr Ni 17 2	540	–	690	16	+20	60	431	14Х17Н2
F-3	x8CrTi 17	360	–	480	16	+20	60	430T	08Х17Т
AM-4	x8CrNiTi 17 6	630	–	730	12	+20	60	–	08Х17Н6Т
A-5	x3CrNi 19 10; x3CrNi 19 11	270	310	500	25	–20	29	304L	03Х18Н11, 03Х18Н12
	x3CrNiN 19 10; x3CrNiN 19 11	305	345	530	22	–196[1)]	29	304LN, 304L	Ditto
	x8CrNi Nb18 11, x8CrNi Ti 18 11	290	330	550	22			321, 347, 304LN, 304L	Ditto + 08Х18Н10Т, 08Х18Н12Б
A-6	x3CrNiMo 19 11 3	270	310	500	22	–20 –196[1)]	29 29	304L, 316L	03Х18Н11, 03Х18Н12, 03Х17Н14М3
	x3CrNiMo 19 13 4, x3CrNiMoN 19 11 3	305	345	530	22			304LN, 304L, 316LN, 317L	Ditto
	x3CrNiMoN 19 13 4, x8CrNiMoNb 19 11 3, x8CrNiMoTi 19 11 3	340	380	570	22			321, 347, 304LN, 304L, 317LN, 316LN, 317L, 316Ti, 316Nb	Ditto + 08Х18Н10Т, 08Х18Н12Б
A-7ss	x2CrNiMoCu 21 25 5 2	270	310	500	22	–20	29	N 08904 (904L)	–
	x2CrNiMoCuN 20 18 6 1	370	410	650	22	–60[2)]		S 31254	–
AF-8dup	x3CrNiMoN 22 5 3	450	490	620	25			S 31803	08Х22Н6М2
	x3CrNiMoWCuN 25 7 3	485	525	690	20			S31260, S 31803	08Х22Н6М2, 08Х21Н6М2Т
	x4CrNiMoCuN 26 6 4 2; x3CrNiMoN 26 8 5; x3CrNiMoWCuN 26 8 4 1 1	550	590	780	20	–20[3)]	40	S 32550, S32750, S32760	–
A-9sp	x2CrNi 24 12, x10CrNi 24 12, x8CrNiMo 23 13, x10CrNiMo 24 13 2 и аналогичные	350	420	520	22	–20	29	Dissimilar welded joints. Intermediate (transition) layers for stainless liners including intermediate runs of clad steel joints. Welding of type 309, 309L, 309Mo, 309S and 309SCb steels	
A-10sp	x8CrNiMoN 16 25 6	390	–	610	26	+20	80	Liners including intermediate runs of clad steel joints. Welding of grade M-1, MF-2, F-3 and AM-5 steels, as well as limited weldability steels without heating.	
	x8CrNiMoVN 16 25 6 1	490	–	680	26	+20	80		
	x1CrNi 26 22, x10CrNi 26 22	390	–	550	26	–20	29	Ditto+welding of type 310 and 310Mo steels	

[1)] Tests at a temperature of –196 °C are carried out only if required by the Register based on the manufacturer's request to record in the Certificate of Approval for Welding Consumables the extended range of approval.
[2)] Tests at a temperature of –60 °C are carried out only if required by the Register based on the manufacturer's request to record in the Certificate of Approval for Welding Consumables the extended range of approval.
[3)] In accordance with the manufacturer's request, tests at a lower temperature may be carried out to record in the Certificate of Approval for Welding Consumables the extended range of approval.

Table 4.8.4.1-2

Requirements for mechanical properties of butt welded joint metal

Grade of welding consu-mable	Base metal for testing			Static tensile test R_m, MPa	Impact test		Bend test		
	Designation of typical composition	AISI/UNS	National steels		Tempe-rature, °C	*KV*, J, min.	Specimen type	Mandrel diameter *D*[1]	Bend angle, deg.
M-1	x20Cr13; x30Cr13	410, 420	20Х13, 30Х13	650	+20	60	Transverse	5*t*	120
	x7CrNiNb 16 4	–	07Х16Н4Б, 07Х16Н4	850	+20	60	Transverse	5*t*	120
MF-2	x10CrNi 13 1	414, 410S	08Х14НДЛ, 05Х12Н2Т	590	–10	20	Transverse	6*t*	120
	x10 Cr Ni 15 4	429	08Х15Н4ДМЛ	750	–10	30	Transverse	5*t*	120
	x15 Cr Ni 17 2	431	14Х17Н2	690	+20	60	Transverse	5*t*	120
F-3	x8CrTi 17	430T	08Х17Т	480	+20	60	Transverse	5*t*	120
AM-4	x8CrNiTi 17 6	–	08Х17Н6Т	730	+20	60	Transverse	5*t*	120
A-5	x3CrNi 19 11	304L	03Х18Н11, 03Х18Н12	500	–20 –196[2]	27 27	Transverse	3*t*	120
	x3CrNiN 19 11	304LN	–	530					
	x8CrNi Ti 18 11;	321	08Х18Н10Т,	550					
	x8CrNi Nb18 11	347	08Х18Н12Б	550					
A-6	x3CrNiMo 19 11 3	316L	03Х17Н14М3	500	–20 –196[2]	27 27	Transverse	3*t*	120
	x3CrNiMo 19 13 4;	317L	–	530					
	x3CrNiMoN 19 11 3	316LN	–	530					
	x3CrNiMoN 19 13 4	317LN	–	570					
A-7ss	x2CrNiMoCu 21 25 5 2	N 08904 (904L)	–	500	–20[3]	27	Transverse	3*t*	120
	x2CrNiMoCuN 20 18 6 1	S 31254	–	650					
AF-8dup	x3CrNiMoN 22 5 3	S 31803	03Х22Н6М2; 08Х22Н6М2	620	–20 –60[3]	40 40	Transverse	3*t*	
	x3CrNiMoWCuN 25 7 3	S31260	08Х21Н6М2Т	690				4*t*	
	x4CrNiMoCuN 26 6 4 2	S 32550;	–	760				6*t*	120
	x3CrNiMoN 26 8 5;	S32750;	–	800				6*t*	
	x3CrNiMoWCuN 26 8 4 1 1	S32760	–	750				6*t*	
A-9sp	x8CrNi 24 14	309	–	515	–20	27	Transverse	3*t*	120
	Dissimilar, e.g. D40 + A-6 etc.			≥ R_m of base metal			Longitudinal	3*t*	120
A-10sp	Dissimilar, e.g. D40 + A-6 etc.				[4]	[4]	Longitudinal	3*t*	120

[1] *t* — thickness.

[2] Tests at a temperature of –196 °C are carried out only on the Register's special demand based on the manufacturer's request to record in the Certificate of Approval for Welding Consumables the extended range of approval.

[3] In accordance with the manufacturer's request, tests at a lower temperature may be carried out to record in the Certificate of Approval for Welding Consumables the extended range of approval.

[4] The test temperature and criteria for evaluating the test results shall meet the minimal requirements for welding consumables for the base metal.

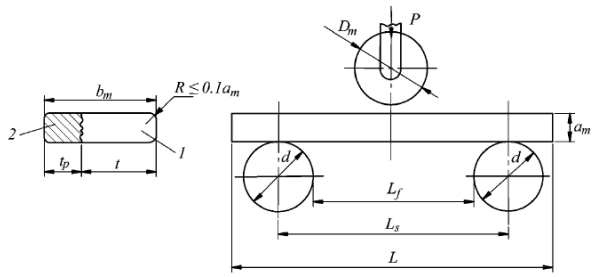

Fig. 4.8.4.2
Specimen with cladding deposit for side-bend testing
1 — base metal, 2 — cladding deposit;
$a_m = 10^{+0,1}$ mm is thickness of the specimen;
$b_m = t + t_p \leq 35$ mm is width of the specimen (where t is thickness of the base metal;
$6 \leq t_p \leq 10$ is thickness of the cladding deposit);
$D_m = 3a_m = 30$ mm is diameter of bending mandrel; $d = 30$ mm is diameter of supporting rollers;
$L_f = D_m + 3a_m = 60$ mm is free interval between the rollers; $L \geq 160$ mm is length of the specimen;
$R \leq 0{,}1a_m$ is permissible radius of rounding-off of specimen's free edges; P is bending load applied to the specimen

4.8.4.2 Static bend tests for specimens with cladding deposit.

Tested by static bend shall be three specimens with cladding deposit and with loading arrangements aimed at load application parallel to the bond surface (side bend) and perpendicular to the direction of welding in the process of deposition.

Dimensions of the specimens and parameters of testing shall comply with the data shown in Fig. 4.8.4.2.

It is recommended to take test specimens by mechanical cutting. In case of using the isolating plasma cutting the allowance for machining shall be such as to make the specimen completely free from heat affected zone.

The test procedure shall consist of two stages:

static bend to an angle of about 90° with recording of the intermediate test result (without dismantling of the specimen);

continuation of the test until the final bend angle (not less than 120° is obtained, dismantling of the specimens, recording of the test result.

If, prior to obtaining the required bend angle, and inadmissible crack appears in the test zone, the testing shall be stopped. The following defects are considered inadmissible during this type of tests:

transverse cracks of 3 mm and more in length;

longitudinal discontinuities opening in the process of specimen bending and having a length equal to 20 % or more of the specimen width.

4.8.4.3 Tests defining resistance to intercrystalline corrosion.

4.8.4.3.1 Tests intended to define resistance of the weld metal and deposited metal to intercrystalline corrosion shall be carried out in compliance with the requirements of the agreed national or international standards specifying immersion of the specimens in boiling aqueous solution of copper sulphate and sulphuric acid in presence of copper as metal with subsequent bending of the specimens to 90º angle in order to reveal indications of intercrystalline corrosion (Strauss method). At initial approval of welding consumables a variety of this method shall be used, in which the specimens are immersed in the boiling solution for at east 24 h; at repeated tests it is permissible, according to the test program approved by the Register, to employ an accelerated test procedure, with the specimens kept in the boiling solution for a period from 8 to 15 h.

4.8.4.3.2 Unless otherwise agreed upon with the Register, the dimensions of specimens for ICC testing (refer to Fig. 4.8.4.3.2) and diameters of bending mandrels shall correspond to values in Tables 4.8.4.3.2-1 and 4.8.4.3.2-2.

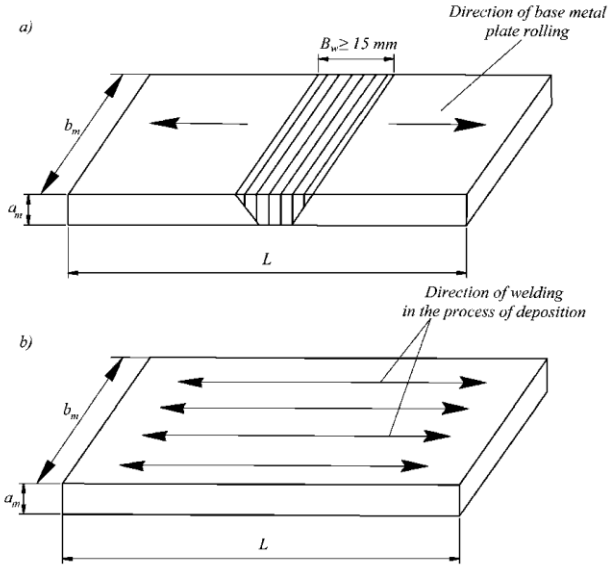

Fig. 4.8.4.3.2
Specimens for tests intended to define resistance to intercrystalline corrosion:
a — of weld metal in the welded joint; *b* — of deposited metal in the cladding deposit

Table 4.8.4.3.2-1

Dimensions of specimens and diameters of mandrel rounding-off when testing weld metal for resistance to ICC

Grades of welding consumables	Specimen thickness *a*, mm	Specimen width *b*, mm	Specimen length *L*, mm	Mandrel diameter, mm
A-5, A-6, A-7, A-9sp	6±0,1	20±0,5	≥ 100	20
AF-8	5±0,1	20±0,5	≥ 100	20
F-3	5±0,1	20±0,5	≥ 100	30
AM-4, MF-2, M-1	3±0,1	20±0,5	≥ 80	20

Table 4.8.4.3.2-2

Dimensions of specimens and diameters of mandrel rounding-off when testing deposited metal for resistance to ICC

Grades of welding consumables	Specimen thickness *a*, mm	Specimen width *b*, mm	Specimen length *L*, mm	Mandrel diameter, mm
A-5, A-6, A-9sp	4±0,1	20±0,5	≥ 100	20
AF-8	4±0,1	20±0,5	≥ 100	20

The resistance of weld metal to ICC is evaluated on the basis of test results obtained from three specimens subjected to tensioning of the weld top layer, which corresponds to testing of the base metal plate initial surface (not subjected to machining intended for reduction of specimen thickness). In this case the plane of bending load application (axis of mandrel) shall coincide with the weld axial line.

Note. Bending with application of the load within the heat affected zone is employed for testing of corrosion-resistant steels and for approval of welding procedures.

The resistance of cladding layer metal to ICC is evaluated on the basis of test results obtained from four specimens cut out in accordance with the directions of Fig. 4.8.3.6.2; of these specimens:

two specimens are tested by tensioning the top surface A (top surface) of the deposit;

two specimens are tested by tensioning the top surface B (bottom surface) of the deposit.

4.8.4.3.3 The bent specimens shall be inspected using a magnifying glass with 8-12X magnification. Absence of cracks in the specimen, apart from longi-tudinal cracks and cracks directly on the edges, is a proof of resistance to ICC.

In questionable cases the resistance to ICC is additionally estimated by a metallographic method. In this case from a non-bent portion of the specimen after corrosion testing a wafer is cut to obtain a microsection; the plane of the cut shall be normal to the weld and contain the weld metal and heat affected zone. The presence and depth of intercrystalline corrosion is established on etched sections using 200X magnification. The maximum depth of corrosive attack is revealed in six fields of vision, which shall include portions with largest depth of ICC. The specimen is considered corrosion (ICC) — resistant, if the decay at grain boundaries has the maximum depth not exceeding 30 micron.

4.8.4.3.4 The result of the test for resistance to ICC is considered satisfactory, if the ICC is not detected on any of the tested specimens. If one of the tested specimens yields unsatisfactory results, the tests shall be repeated, as required by the agreed national or international standards.

If at the initial tests more than one specimen proved to be unsatisfactory, or if the repeated tests produced negative results, the weld or deposited metal is considered as having failed the tests for resistance to ICC.

N o t e . In ambiguous cases for materials susceptible to cracking it is recommended to carry out, as a reference check, bending tests for specimens, similar to ICC-tested, but not subjected to boiling in aqueous solution of sulphuric acid and copper sulphate.

4.8.4.4 Check of α-phase (ferrite component).

Inspection of α-phase (ferrite component) in the weld metal and cladding layer is determined in welding consumables of Grades A-5, A-6, AF-8 and A-9sp using the following methods of measurement:

.1 local non-destructive testing method, where the α-phase content is estimated as the mean value of at least 10 measurements for butt-welded joint assemblies, also for assemblies with cladding deposits, as specified in 4.8.3.5 and 4.8.3.6;

.2 if the above measurement method produced inadequate results, or in accordance with a special requirement of the Register, a check analysis is performed by the volumetric magnetic method with the use of ferritemeters, which make measurements with error not exceeding ±10 % of the measured value.

The analysis for determination of α-phase content with the aid of volumetric magnetic method requires a seven-layer deposition with welding consumables analyzed to a corrosion-resistant steel plate, which in its grade and chemical composition corresponds to the above consumables. From the two top layers of deposited material pilot cylindrical specimens are cut having a length of (60±1) mm and diameter of (5±0,1) mm, as shown in Fig. 4.8.4.4.

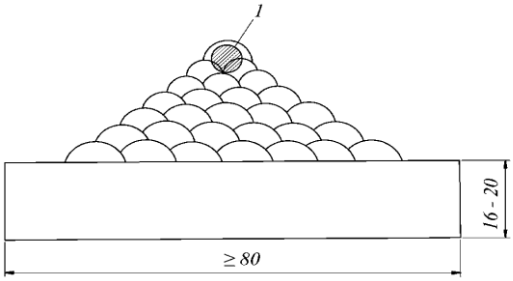

Fig. 4.8.4.4
Arrangements for cutting out specimens intended to determine α-phase content by volumetric magnetic method: 1 — place for cutting out check specimens

The reference values of α-phase content shall meet the requirement of technical documentation approved by the Register or specified by the agreed national standards for particular welding consumables.

The results of check measurements of α-phase content in the weld metal and/or cladding layer shall be recorded in the Test Report.

4.8.4.5 Determination of chemical composition of deposited metal.

The test assemblies for determination of chemical composition of deposited metal shall be taken from metal of two top layers; these are:

test assembly of deposited metal;

test assembly of multilayer deposit taken in accordance with Fig. 4.8.3.6.2 (for compositions "strip — flux" the test assemblies for determination of chemical composition are taken from deposited metal only).

The results of determination of deposited metal chemical composition shall comply with tolerances claimed by the manufacturer and shall be recorded in the Test Report.

4.8.5 Tests for confirmation of Certificate of Approval for Welding Consumables.

The program of annual re-approval test of welding consumables for corrosion-resistant steels welding and deposition shall include:

.1 manufacture of deposited metal assembly and testing of specimens, static tensile and impact bend as well as checking chemical analysis of the deposited metal;

.2 determination of resistance of weld metal or deposited metal to ICC, if this is required for a particular brand of welding consumable.

If required by the Register, the scope of annual tests may be extended and supplemented by other types of testing or preparation of additional test assemblies.

4.9 WELDING CONSUMABLES FOR ALUMINIUM ALLOYS

4.9.1 General.

4.9.1.1 The requirements of this Section specify the conditions of approval and survey of welding consumables intended for hull construction and other structure aluminium alloys complying with the requirements in 5.1, Part XIII "Materials".

When the special requirements are lacking, the similar requirements for approval of the welding consumables for welding normal and higher strength hull structural steels shall apply.

4.9.1.2 The welding consumables intended for fabrication of aluminium alloy structures are divided into two categories as follows:

W — wire electrode and "wire — gas" combinations for metal arc inert gas welding (MIG, 131 according to ISO 4063), tungsten inert gas arc welding (TIG, 141) or plasma arc welding (15);

R — rod — gas combinations for tungsten inert gas arc welding (TIG, 141) or plasma arc welding (15).

4.9.1.3 Grading and designation.

The welding consumables are divided into grades according to Tables 4.9.1.3-1 and 4.9.1.3-2 for the international and national alloys, respectively, considering the composition and strength level of the base metal used for the approval tests.

Table 4.9.1.3-1

Grades of welding consumables for international aluminium alloys

Grade	Base metal for tests and alloy designation	
	Numerical code	Chemical symbol
RA/WA	5754	AlMg3
RB/WB	5086	AlMg4
RC/WC	5083	AlMg4,5Mn0,7
	5383	AlMg4,5Mn0,9
	5456	AlMg5
	5059	–
RD/WD	6005A	AlSiMg(A)
	6061	AlMg1SiCu
	6062	AlSiMgMn
Note. Approval of higher strength AlMg base materials also covers the lower strength AlMg grades and their combinations with AISI grades.		

Table 4.9.1.3-2

Grades of welding consumables for national aluminium alloys

Grade	Base metal for tests and alloy designation	
	Numerical code	Chemical symbol
R1/W1	1530	AlMg3,5Si0,6
R2/W2	1550	AlMg5,0Mn0,6
R3/W3	1561	AlMg6,0Mn1
R3/W3	1565ч	AlMg6,0Mn1
R3/W3	1581	AlMg5Sc0,03
R4/W4	1565ч	AlMg6,0Mn1
R4/W4	1575	AlMg6,0Mn0,5Sc
R4/W4	1581	AlMg5Sc0,03
R5/W5	–	AlSiMgMn
Note. Approval of higher strength AlMg base materials also covers the lower strength AlMg grades and their combinations.		

The consumable grade designation shall include:

designation of the welding consumable group (W or R);

designation of the group of the base metal used for the approval tests (A, B, C and D for international alloys or 1, 2, 3, 4 and 5 for national alloys);

numerical code of the grade of the base metal used for the approval tests given in brackets. For example: RC(5446), W3(1561), etc.

4.9.1.4 Approval of a wire or a rod shall be granted in conjunction with a specific shielding gas according to Table 4.9.1.4 or defined in terms of composition and purity of "special" gas to be designated with group sign "S". The shielding gas composition shall be entered in a test report and the Certificate of Approval for Welding Consumables/Certificate (C). The approval of the wire with any particular gas can be applied or transferred to any combination of the same wire and any gas in the same numbered group as defined in Table 4.9.1.4. For special gases designated with sign "S" the approval is valid only for the specific composition and purity of the shielding gas or mixture used in testing.

Table 4.9.1.4

Designation of typical composition group	Shielding gas composition, vol. %1	
	Argon	Helium
I-1	100	–
I-2	–	100
I-3	Rest	> 0 up to 33
I-4	Rest	> 33 up to 66
I-5	Rest	> 66 up to 95
S	Gases, which composition and purity differ from typical composition groups I-1 to I-5.	
1 Gases of other chemical composition (mixed gases) may be considered as "special gases" (are designated with sign "S") and covered by the results of separate tests for each specific composition.		

4.9.1.5 The approval procedure and the requirements for manufacturers shall comply with 4.1.3. The requirements for test procedure and results evaluation shall comply with the requirements in 4.2.

4.9.2 Deposited metal tests.

The test assembly as shown in Fig. 4.9.2 shall be welded in a downhand position for chemical analysis of the deposited metal. The assembly dimensions, which depend on the type of the welding consumables and the degree of the welding procedure mechanization, shall provide a sufficient amount of deposited metal for chemical analysis. The base metal shall be compatible with the weld metal in respect of the chemical composition. The results of the chemical analysis including the main alloying elements and impurities shall be within the limits specified by the manufacturer.

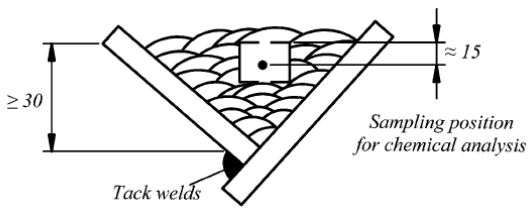

Fig. 4.9.2
Deposited metal test assembly

4.9.3 Butt weld tests.

4.9.3.1 The testing of butt welded joints shall be carried out on the test assemblies according to Figs. 4.9.3.1-1 and 4.9.3.1-2 similar to 4.3.3.1, 4.3.3.2, 4.5.2.3.1, 4.5.3.3.1 or 4.5.4.2.1, depending on the type of welding consumables and the degree of the welding procedure mechanization respectively. The base metal corresponding to the welding

consumables grade to be approved according to Tables 4.9.1.3-1 or 4.9.1.3-2 shall be used for preparation of the test assemblies.

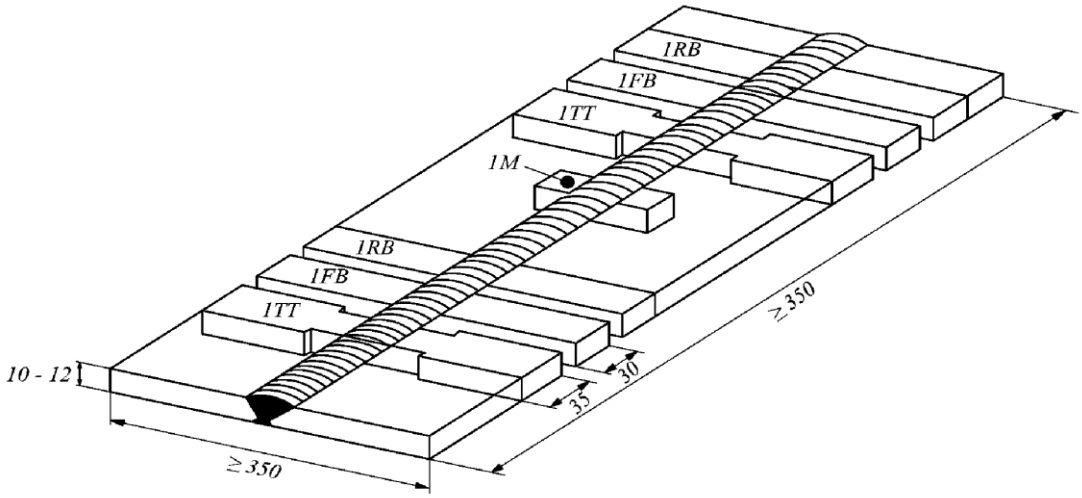

Fig. 4.9.3.1-1
Butt weld test assembly for welding in various welding positions: edge preparation shall be V-single or V-double with 70° angle;
back sealing runs are allowed in single V weld assemblies;
in case of V-double assembly, both sides shall be welded in the same welding position;
specimens are designated according to 4.9.3.5

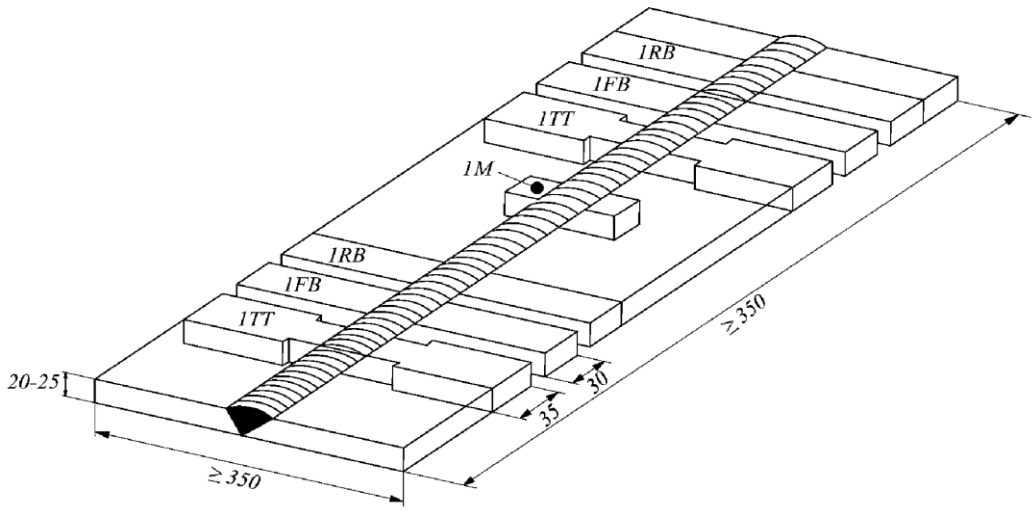

Fig. 4.9.3.1-2
Additional butt weld test assembly for welding in downhand position:
edge preparation shall be V-single with 70° angle;
back sealing runs are allowed;
specimens are designated according to 4.9.3.5

4.9.3.2 One butt weld test assembly according to Fig. 4.9.3.1-1 having thickness 10 to 12 mm shall be prepared in each welding position (downhand, vertical-upward, vertical-downward, horizontal-vertical and overhead), for which the consumable is recommended by the manufacturer. In this case the welding consumables satisfying the requirements for downhand and vertical-upward positions may be considered as also complying with the relevant requirements for the horizontal-vertical position.

4.9.3.3 Additionally one test assembly according to Fig. 4.9.3.1-2 having thickness 20 to 25 mm shall be prepared and welded only in the downhand position.

4.9.3.4 On completion of welding, the test assemblies shall be allowed to cool naturally to the ambient temperature. For grade D welding consumables, the test assemblies shall be allowed to naturally ageing for a minimum period of 72 h from the completion of welding before testing is carried out.

4.9.3.5 The following types of test specimens shall be taken from each butt weld test assembly and tested as shown in Figs. 4.9.3.1-1 and 4.9.3.1-2:

2TT — two transverse flat tensile test specimens;

2RB — two transverse root bend test specimens;

2FB — transverse face bend test specimens;

1M — transverse macrosection.

4.9.3.6 The mechanical properties of butt-welded joints shall meet the requirements in Table 4.9.3.6. The test procedure and results evaluation, including repeated and annual tests, shall comply with the relevant requirements in 4.2. The position of a fracture on tensile test specimens shall be recorded in a test report. The macrosections shall be examined for defects such as a lack of fusion, cavities, inclusions, pores or cracks. At that the bending tests are performed with the "wrap around bending method" as shown in Fig. 4.9.3.6.

Table 4.9.3.6

Requirements for mechanical properties of butt welded joints

Grade of welding consumable	Numerical code of base metal for testing	Tensile strength R_m, MPa	Bend test	
			Mandrel diameter D[1]	Bend angle[2], deg.
International alloys				
RA/WA	5754	190	3*t*	180
RB/WB	5086	240	6*t*	
RC/WC	5083	275	6*t*	
	5383 или 5456	290	6*t*	
	5059	330	6*t*	
RD/WC	6061, 6005A or 6082	170	6*t*	
National alloys				
R1/W1	1530	185[3,4]	6*t*	180
R2/W2	1550	275[3,4]	6*t*	
R3/W3	1561	305[3,4]/ 335[3, 5]	6*t*	
R3/W3	1565ч	305[3,4]/ 335[3, 5]	6*t*	
R3/W3	1581	320[4]/ 355[5]	6*t*	
R4/W4	1565ч	335[3,4]	6*t*	
R4/W4	1575	360[4]/ 400[5]	6*t*	
R4/W4	1581	355[4]	6*t*	
R5/W5	(AlSiMgMn)	170	6*t*	

[1] *t* — specimen thickness during test.

[2] When evaluating the test results, one should be guided by the following: no any single crack of over 3 mm long in any direction is allowed on the specimen surface; cracks at the corners of a test specimen may be ignored in the evaluation, unless there is evidence that they result from lack of fusion.

[3] For welded joints of up to 12,5 mm thick inclusive.

[4] For tensile testing of transverse flat tensile test specimens with weld reinforcement removed.

[5] For tensile testing of transverse flat tensile test specimens with reinforcement complying with international and national standards.

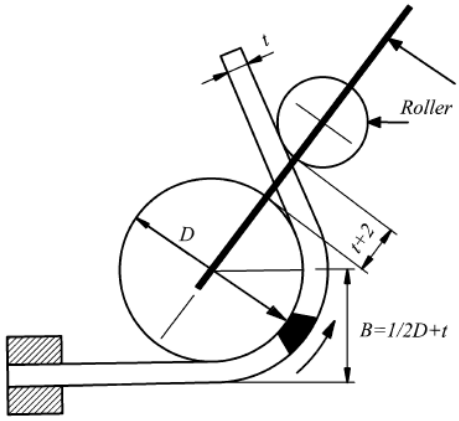

Fig. 4.9.3.6
Sketch of wrap around bend test

4.9.4 Annual tests.

4.9.4.1 The annual tests to endorse the Certificate of Approval for Welding Consumables shall include the preparation and testing of the deposited metal test assembly as prescribed under 4.9.2 (refer to Fig. 4.9.2) and of one butt weld test assembly having thickness 10 — 12 mm in a downhand welding position according to 4.9.3 (refer to Fig. 4.9.3.1-1).

4.10 WELDING CONSUMABLES FOR TITANIUM ALLOYS

4.10.1 General.

4.10.1.1 The requirements of this Section specify the conditions of approval and survey of welding consumables to be used for hull and other structures of titanium alloys as per the requirements of Section 9 of Part XIII "Materials". Where no special requirements are given herein, those for the approval of welding consumables for normal and higher strength hull structural steels shall apply in analogous manner.

4.10.1.2 The welding consumables to be used for fabricating titanium alloy structures are divided into two categories as follows:

W — wire electrode and "wire — gas" combinations for consumable electrode inert gas arc welding (MIG, 131 according to ISO 4063), tungsten inert gas arc welding (TIG, 141) or plasma arc welding (15);

R — rod — gas combinations for consumable electrode inert gas arc welding (TIG, 141).

4.10.1.3 Grading and designation.

The welding consumables are graded into categories considering the composition and strength level of the base metal used for the approval tests as per Table 4.10.1.3.

The welding consumable grade designation shall include:

Ti index to indicate the functionality of welding consumables;

designation of the welding consumables group (W or R);

designation of the strength group of a welded joint (metal used for the approval tests) — A, B;

letter designation of the welding consumable (alloy) brand in parenthesis.

Examples: TiWA(ВТ1-00св), TiRB (2В), TiRB(ПТ-7Мсв).

Table 4.10.1.3

Welding consumable grade		Letter designation of the welding consumable brand	Base material for the tests	Range of approval
Wire	Rod-gas combinations			
TiWA	TiRA	ВТ1-00св	ВТ1-0	ВТ1-00, ВТ1-0
TiWB	TiRB	2В	ПТ-3В	ВТ1-00, ВТ1-00,ПТ-1М, ПТ-7М, ПТ-3В
		ПТ-7Мсв[1]	ПТ-7[1]	ВТ1-00, ВТ1-0, ПТ-1М, ПТ-7М

[1] Approval of welding materials exclusively for welding alloys used solely for the manufacture of pipes is carried out in within the framework of requirements for the approval of welding procedures for butt joints of pipes with diameter $D \le 25$ mm and $D \ge 80$ mm and wall thickness $t \le 3$ mm and $t \ge 10$ mm accordingly, in one of the (spatial) welding positions (refer to Section 8).

4.10.1.4 Approval of a wire or a rod shall be granted in conjunction with a specific shielding gas type composition group according to Table 4.9.1.4 or defined in terms of composition and purity of "special" gas to be designated with group sign "S". The shielding gas composition shall be entered in a test report and the Certificate of Approval for Welding Consumables/Certificate (C). The approval of the wire with any particular gas can be applied or transferred to any combination of the same wire and any gas in the same numbered type composition group as defined in Table 4.9.1.4. For special gases designated with sign "S" the approval is valid only for the specific composition and purity of the shielding gas or mixture used in testing.

4.10.1.5 The approval procedure and the requirements for manufacturers shall be in accordance with 4.1.3. The requirements for test performance and results evaluation shall comply with the provisions in 4.2.

4.10.2 Deposited metal test.

The test assembly as shown in Fig. 4.10.2 shall be prepared and welded in a downhand position for determining the chemical composition of the deposited metal. The test assembly dimensions shall allow the flow of the welding process in a steady mode as well as a sufficient

quantity of pure deposited metal for chemical analysis. In any case the length of the test assembly shall be at least 150 mm for manual welding processes and at least 300 mm for mechanized welding.

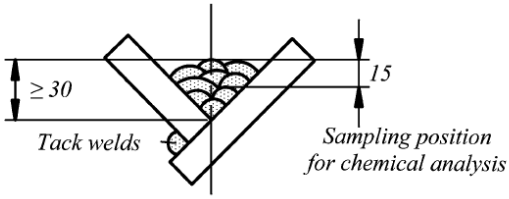

Fig. 4.10.2
Deposited metal test assembly

Table 4.10.2

Welding procedure	Welding type	Diameter of welding wire (rod), mm	
		to be approved	used for the deposited metal test assembly welding
Automatic	131	0,8 to 3,0	any
Manual	141	1,2 to 6,0	1,6 and 4,0
Automatic	141	1,2 to 4,0	1,6 and 3,0

The base metal shall be compatible with the weld metal in respect of chemical composition. The results of the chemical analysis in main alloying elements and impurities shall be within the limits specified by a manufacturer. The chemical composition of a deposited metal shall be determined by the methods, specified standards or procedures agreed upon with the Register. The quantity of the test assemblies made of deposited metal shall be determined taking into account the range of diameters of welding wire (rod) to be approved by the Register. Herewith, the recommendations given in Table 4.2.10 shall be complied with.

4.10.3 Butt weld tests.

4.10.3.1 The testing of butt welded joints shall be carried out on the test assemblies according to Figs. 4.10.3.1-1 and 4.10.3.1-2 in an analogous manner to 4.3.3.1 and 4.3.3.2, 4.5.2.3.1, 4.5.3.3.1 or 4.5.4.2.1 depending on the type of welding consumables and degree of the welding procedure mechanization respectively. The base metal in compliance with the approved welding consumable grade according to Table 4.10.1.3 shall be used for test assemblies preparation.

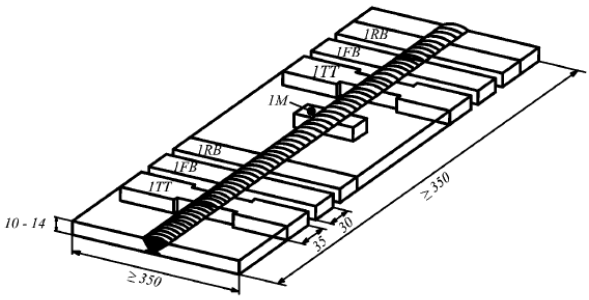

Fig. 4.10.3.1-1
Butt weld test assembly for welding in various welding positions: specimens are designated according to 4.10.3.5.
Edge preparation shall be single V or double V with 50° angle (refer to Table 4.10.3.3)

4.10.3.2 One butt weld test assembly according to Fig. 4.9.3.1-1 with a thickness of 10 — 12 mm shall be prepared and welded n each welding position (downhand, vertical-upward,

vertical-downward, horizontal-vertical and overhead) for which the consumable is recommended by a manufacturer according to Fig. 4.10.3.1-1.

In this case the welding consumables satisfying the requirements for downhand and vertical-upward positions may be considered as also complying with the relevant requirements for the horizontal-vertical position.

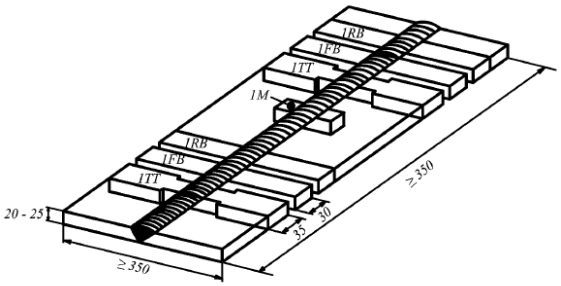

Fig. 4.10.3.1-2
Additional butt weld test assembly for welding in downhand position: specimens are designated according to 4.9.3.5. Edge preparation shall be carried out according to Table 4.10.3.3

4.10.3.3 Additionally one test assembly according to Fig. 4.10.3.1-2 with a thickness of 20 to 25 mm shall be prepared and welded in the downhand position only. Recommended forms of preparation are set forth in Table 4.10.3.3.

Table 4.10.3.3

The edge preparation details	Welding type	Wire diameter
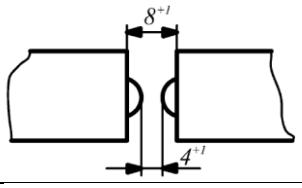	141 — manual	Root of a weld — 3 mm Filling pass — 4…6 mm
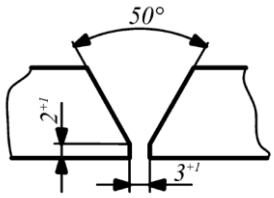	141 — manual	Root of a weld — 3 mm Filling pass — 4…6 mm
	141 — manual 131 or 141 — automatic	Root of a weld — 3 mm Filling pass — 1,2..2,0 mm
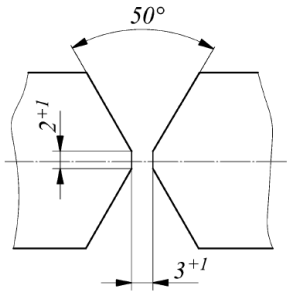	141 — manual	Root of a weld — 3 mm Filling pass — 4…6 mm
	141 — manual 131 or 141 — automatic	Root of a weld — 3 mm Filling pass — 1,2..2,0 mm

4.10.3.4 The test assembly length shall provide a steady flow of the welding procedure in the maintaining mode and manufacture of the required quantity of test assemblies.

The welded joints test assembly techniques if otherwise is not agreed with the Register, shall provide the root pass with manual argon-arc welding with the formation of the weld reverse side using a wire with a diameter of 3 mm. Filling-up of the groove and a back run shall be carried out taking into account the recommendations of Table 4.10.3.4.

Table 4.10.3.4

Welding procedure and type	Welding type ISO 4063	Welding consumable test assembly thickness			
		10 to 14 mm		20 to 25 mm	
		Diameter, mm		Diameter, mm	
		additives	cons. electrode	additives	cons. electrode
Mechanised consumable electrode inert gas arc welding	131	1,0 — 1,2	–	1,6 – 2,0	–
Mechanised consumable electrode inert gas arc welding	141	3,0 or 4,0	3,0	5,0 or 6,0	4,0
Automatic tungsten inert gas welding — TIG	141	1,2 or 1,4	2,5 — 3,0	1,6 or 2,0	3,0 — 4,0

Test assembly welding modes shall comply with the manufacturer's recommendations or technological documentation for the welding of titanium alloys.

4.10.3.5 From each butt weld test assembly as per Figs. 4.10.3.1-1 and 4.10.3.1-2 the following types of specimens shall be selected and tested:

two transverse flat tensile test specimens (TT);
two transverse root bend test specimens (RB);
two transverse face bend test specimens (FB);
one transverse macrosection (M).

4.10.3.6 The mechanical properties of butt welded joints shall meet the requirements in Table 4.10.3.6. The test performance and results evaluation including repeated and annual tests shall comply with the relevant requirements in 4.2. The position of a fracture on tensile test specimens shall be included in a test report. The macrosections shall be examined to check for the presence of imperfections like lack of fusion, cavities, inclusions, pores or cracks.

Table 4.10.3.6

Welding consumable grade	Base metal grade	Tensile strength, R_m, MPa at least	Bend test	
			Mandrel diameter	The bending angle, degrees,[1] at least
TiWA/TiRA	ВТ1-0	370	6t	180
TiWB/TiRB	ПТ-3В	640	8t	180
	ПТ-7М	480	8t	180

[1] The cracks of length less than 3 mm on the specimen side being in tension are not taken into consideration.
Note. *t* — the specimen's thickness.

4.10.4 Annual tests.

The annual tests to endorse the COCM shall include the preparation and testing of the deposited metal test assembly as prescribed in 4.10.2 (refer to Fig. 4.10.2) and of one butt weld test assembly of 10 to 14 mm thick in a downhand welding position according to 4.10.3 (refer to Fig. 4.10.3.1-1).

5 APPROVAL TEST FOR WELDERS

5.1 GENERAL

5.1.1 Welding of structures and products subject to technical supervision of the Register according to the requirements of 1.1.1 shall be performed by the welders, who have passed the respective tests and been admitted to the welding operations by the Register.

5.1.2 The testing procedure for the welders of manual and partially mechanized welding with drawing up a Welder Approval Test Certificate shall meet the requirements of Section 4, Part III "Technical supervision during manufacture of materials" of the Rules for Technical Supervision during Construction of Ships and Manufacture of Materials and Products for Ships.

The welders who have passed the tests according to the international and/or national standards (ISO 9606, ASME Sec. IX, ANSI/AWS D1.1) may be admitted to the welding operations.

5.1.3 The testing procedure for the welders of completely mechanized welding with drawing up a Welder Approval Test Certificate shall meet the requirements of Section 4, Part III "Technical supervision during manufacture of materials" of the Rules for Technical Supervision during Construction of Ships and Manufacture of Materials and Products for Ships or the respective international and national standards recognized by the Register including ISO 14732.

When it is stipulated by Contract terms, the certification and approval of the welders for automatic and robot welding shall be performed according to the procedural requirements equivalent to ISO 14732.

Certification and approval of welding operators for equipment of aluminium alloy friction stir welding shall be carried out based on the provisions of ISO 25239-3:2011 and 4.1.5 and 4.4.7, Part III "Technical Supervision during Manufacture of Materials" of the Rules for Technical Supervision During Construction of Ships and Manufacture of Materials and Products for Ships.

5.1.4 In all the cases listed in 5.1.2 and 5.1.3, the test results on welding procedure approval performed by the welder to be certified, can be considered as practical tests on welders' approval.

5.1.5 Recognition of documents confirming the qualification of welders and issued by another classification society or authorized competent authority shall be determined in each case by the Register during technical supervision for ships under construction or manufacture of products in the scope sufficient to confirm compliance of these documents with the requirements of Section 4, Part III "Technical supervision during manufacture of materials" of the Rules for Technical Supervision During Construction of Ships and Manufacture of Materials and Products for Ships.

5.1.6 Terms for validity and extension of the Welder Approval Test Certificate shall comply with the requirements of Section 4, Part III Technical supervision during manufacture of materials" of the Rules for Technical Supervision During Construction of Ships and Manufacture of Materials and Products for Ships or the international and/or national standards, including EN 287, ISO 9606, ASME Sec. IX, ANSI/AWS D1.1, ISO 14732 as may be agreed upon with the Register.

6 APPROVAL OF WELDING PROCEDURES FOR WELDING OF STEEL STRUCTURES AND PRODUCTS

6.1 GENERAL

6.1.1 The welding procedures adopted for the manufacture of structures subject to survey by the Register, which are mentioned in 1.1.1, shall be approved by the Register and shall comply with the requirements of Section 6, Part III "Technical Supervision during Manufacture of Materials" of the Rules for Technical Supervision during Construction of Ships and Manufacture of Materials and Products for Ships.

7 APPROVAL OF WELDING PROCEDURES FOR ALUMINIUM ALLOYS

7.1 GENERAL

7.1.1 Welding procedure approval used for the manufacture of the aluminium alloy structures subject to survey by the Register shall be approved by the Register and comply with Section 7, Part III "Technical Supervision during Manufacture of Materials" of the Rules for Technical Supervision during Construction of Ships and Manufacture of Materials and Products for Ships.

8 APPROVAL OF WELDING PROCEDURES FOR TITANIUM ALLOYS

8.1 GENERAL

8.1.1 Welding procedure used for the manufacture of the titanium alloy structures subject to survey by the Register shall be approved by the Register and comply with Section 8, Part III "Technical Supervision during Manufacture of Materials" of the Rules for Technical Supervision during Construction of Ships and Manufacture of Materials and Products for Ships.

Russian Maritime Register of Shipping

Rules for the Classification and Construction of Sea-Going Ships
Part XIV
Welding

FAI "Russian Maritime Register of Shipping"
8, Dvortsovaya Naberezhnaya,
191186, St. Petersburg,
Russian Federation
www.rs-class.org/en