RUSSIAN MARITIME REGISTER OF SHIPPING

RULES

FOR THE CLASSIFICATION AND CONSTRUCTION OF SEA-GOING SHIPS

PART IX

MACHINERY

Saint-Petersburg
Edition 2019

Rules for the Classification and Construction of Sea-Going Ships of Russian Maritime Register of Shipping have been approved in accordance with the established approval procedure and come into force on 1 January 2019.

The present edition of the Rules is based on the 2018 edition taking into account the amendments developed immediately before publication.

The unified requirements, interpretations and recommendations of the International Association of Classification Societies (IACS) and the relevant resolutions of the International Maritime Organization (IMO) have been taken into consideration.

The Rules are published in the following parts:

Part I "Classification";

Part II "Hull";

Part III "Equipment, Arrangements and Outfit";

Part IV "Stability";

Part V "Subdivision";

Part VI "Fire Protection";

Part VII "Machinery Installations";

Part VIII "Systems and Piping";

Part IX "Machinery";

Part X "Boilers, Heat Exchangers and Pressure Vessels";

Part XI "Electrical Equipment";

Part XII "Refrigerating Plants";

Part XIII "Materials";

Part XIV "Welding";

Part XV "Automation";

Part XVI "Structure and Strength of Fiber-Reinforced Plastic Ships";

Part XVII "Distinguishing Marks and Descriptive Notations in the Class Notation Specifying Structural and Operational Particulars of Ships";

Part XVIII "Common Structural Rules for Bulk Carriers and Oil Tankers". The text of the Part is identical to that of the IACS Common Structural Rules;

Part XIX "Additional Requirements for Structures of Container Ships and Ships, Dedicated Primarily to Carry their Load in Containers". The text of the Part is identical to IACS UR S11A "Longitudinal Strength Standard for Container Ships" (June 2015) and S34 "Functional Requirements on Load Cases for Strength Assessment of Container Ships by Finite Element Analysis" (May 2015).

Parts I — XVII are published in electronic format in Russian and English. In case of discrepancies between the Russian and English versions, the Russian version shall prevail.

Parts XVIII — XIX are published in electronic format in English only.

© Российский морской регистр судоходства, 2019

As compared to the 2018 edition, the present edition of the Rules contains the following amendments.

RULES FOR THE CLASSIFICATION AND CONSTRUCTION OF SEA-GOING SHIPS

PART IX. MACHINERY

1. Section 1: Table 1.2.3.2 have been amended;

in paras 1.2.4 and 1.6.1 the requirements to the machinery materials have been specified;

in Chapter 1.3 the requirements to hydraulic testing of Internal Combustion Engines have been specified considering IACS UR M72 (Rev.1 Mar 2016).

2. Section 2: Chapter 2.4 has been amended considering IACS UR M53 (Rev.3 June 2017), the requirements for cast iron crankshafts have been specified внесены.

3. Section 6: Chapter 6.3 has been amended considering IACS UR A3 (June 2017);

para 6.5.5.2 has been amended.

4. Section 9: paras 9.1.1 and 9.5.1 have been specified.

5. Editorial amendments have been made.

Based on CL No. 313-08-1163c of 24.09.2018, the Part has been amended as follows: in paras 9.1.1, 9.5.1 the requirements have been specified.

PART IX. MACHINERY

1 GENERAL

1.1 APPLICATION

1.1.1 The requirements of the present Part of the Rules apply to the following engines and machinery:

.1 main internal combustion engines;

.2 main steam turbines;

.3 main gas turbines;

.4 gears and couplings;

.5 engines driving electric generators or auxiliary and deck machinery, units in assembly;

.6 pumps included into the systems covered by Part VI "Fire Protection", Part VIII "Systems and Piping" and Part XII "Refrigerating Plants";

.7 air compressors;

.8 fans of main boilers, turboblowers (turbochargers) and fans of internal combustion engines;

.9 fans included into the system covered by Part VIII "Systems and Piping";

.10 steering gear;

.11 anchor machinery;

.12 towing winches;

.13 mooring machinery;

.14 hydraulic drives;

.15 centrifugal separators for fuel oil and lubricating oil.

1.2 SCOPE OF SURVEYS

1.2.1 The provisions specifying the procedure of survey conducted by the Register during the manufacture of the machinery and equipment, as well as the procedure of consideration and approval of technical documentation are contained in General Regulations for the Classification and Other Activity.

1.2.2 The Register carries out the survey during the manufacture of engines and machinery listed in 1.1, except for auxiliary manually driven machinery.

1.2.3 Prior to manufacturing of the machinery, the following technical documentation shall be submitted to the Register for review:

.1 on internal combustion engines:

for information – in compliance with Table 1.2.3.1-1;

for approval - in compliance with Table 1.2.3.2.

Procedure for submission and review of technical documentation on internal combustion engines (refer to Appendix 2 "Procedure Documentation Flow" to Section 5 "Machinery", Part IV "Technical Supervision During Manufacture of Products" of the Rules for Technical Supervision During Construction of Ships and Manufacture of materials and Products for Ships).

.2 on all other machinery regulated by the present part of the Rules except for internal combustion engines:

.2.1 machinery particulars as per data sheet or specification;

.2.2 general view plans with machinery longitudinal and transverse sections;

.2.3 drawings of bedplates, crankcases, engine beds, casings, covers and other parts, cast or welded, with welding details and instructions;

.2.4 drawings of crankshafts, thrust shafts, output and other shafts as well as their drives (gears);

.2.5 drawings of connecting rods, piston rods and pistons;

Table 1.2.3.1-1

Technical documentation to be submitted for information, as applicable

1	Internal combustion engine particulars (refer to Appendix 3 "Internal Combustion Engine Approval Application Form and Data Sheet" to Section 5 "Machinery", Part IV "Technical Supervision during Manufacture of Products" of the Rules for Technical Supervision during Construction of Ships and Manufacture of Materials and Products for Ships in compliance with Annex 3 to IACS UT 44 (Rev. 9 Dec 2015)) or Technical conditions
2	Engine cross section
3	Engine longitudinal section
4	Bedplate and crankcase of cast design
5	Thrust bearing assembly[1]
6	Frame/framebox/gearbox of cast design[2]
7	Tie rod
8	Connecting rod
9	Connecting rod, assembly[3]
10	Crosshead, assembly[3]
11	Piston rod, assembly[3]
12	Piston, assembly[3]
13	Cylinder jacket/block of cast design[2]
14	Cylinder cover, assembly[3]
15	Cylinder liner
16	Counterweights (if not integral with crankshaft), including fastening
17	Camshaft drive, assembly[3]
18	Flywheel
19	Fuel oil injection pump
20	Shielding and insulation of exhaust pipes and other parts of high temperature which may be impinged as a result of a fuel system failure, assembly
	For electronically controlled engines, construction and arrangement of:
21	Control valves
22	High-pressure pumps
23	Drive for high pressure pumps
24	Operation and service manuals[4]
25	FMEA (for engine control system)[5]
26	Production specifications for castings and welding (sequence)
27	Evidence of quality control system for engine design and in service maintenance
28	Quality requirements for engine production
29	Type approval certification for environmental tests, control components[6]

[1]If integral with engine and not integrated in the bedplate.
[2]Only for one cylinder or one cylinder configuration.
[3]Including identification (e.g. drawing number) of components.
[4]Operation and service manuals are to contain maintenance requirements (servicing and repair) including details of any special tools and gauges that are to be used with their fitting/settings together with any test requirements on completion of maintenance.
[5]Where engines rely on hydraulic, pneumatic or electronic control of fuel injection and/or valves, a failure mode and effects analysis (FMEA) shall be submitted to demonstrate that failure of the control system will not result in the operation of the engine being degraded beyond acceptable performance criteria for the engine. The FMEA reports required will not be explicitly approved by the Classification Society.
[6]Tests shall demonstrate the ability of the control, protection and safety equipment to function as intended under the specified testing conditions per Section 12 "Automation Equipment" of the Rules for Technical Supervision during Construction of Ships and Manufacture of Materials and Products for Ships.

.2.6 drawings of cylinder covers and cylinder liners;

.2.7 drawings of pinions, gear wheels and their shafts;

.2.8 drawings of driving and driven parts of hydraulic gears, disengaging and flexible couplings;

.2.9 drawing of thrust block built in the machinery;

.2.10 drawings of rotors of steam and gas turbines and compressors as well as discs and impellers;

.2.11 drawings of high pressure fuel oil piping and their protection in case of damage;

.2.12 drawings of insulation and lining of gas exhaust piping associated with machinery;

.2.13 drawings of main pipings and fuel oil, lubricating oil, cooling, gas exhaust, scavenging, air control, governing, alarm, protection and other systems, associated with machinery;

.2.14 drawings of machinery hydraulic piping systems with hydraulic drives;

.2.15 drawings of securing machinery structure to bedplate and arrangement of foundation bolts (only for main machinery, electric generator drives, steering gears; anchor, mooring and towing machinery);

Table 1.2.3.2

Technical documentation to be submitted for approval, as applicable

1	Bedplate and crankcase of welded design, with welding details and welding instructions[1,2]
2	Thrust bearing bedplate of welded design, with welding details and welding instructions[1]
3	Bedplate/oil sump welding drawings[1]
4	Frame/framebox/gearbox of welded design, with welding details and instructions[1,2]
5	Engine frames, welding drawings[1,2]
6	Crankshaft, details, each cylinder No.
7	Crankshaft, assembly, each cylinder No.
8	Crankshaft calculations (for each cylinder configuration) according to the attached data sheet and requirements of Chapter 2.4
9	Thrust shaft or intermediate shaft (if integral with engine)
10	Shaft coupling bolts
11	Material specifications of main parts with information on non-destructive material tests and pressure tests[3]
	Schematic layout or other equivalent documents on the engine of:
12	Starting air system
13	Fuel oil system
14	Lubricating oil system
15	Cooling water system
16	Hydraulic system
17	Hydraulic system (for valve lift)
18	Engine control and safety system
19	Shielding of high pressure fuel pipes, assembly[4]
20	Construction of accumulators (for electronically controlled engine)
21	Construction of common accumulators for electronically controlled engine
22	Arrangement and details of the crankcase explosion relief valve in compliance with requirements of 2.3.5 of Part IX "Machinery"[5]
23	Calculation results for crankcase explosion relief valves in compliance with requirements of 2.3.5 of Part IX "Machinery"
24	Details of the type test program and the type test report)[7]
25	High pressure parts for fuel oil injection system6
26	Oil mist detection and/or alternative alarm arrangements in compliance with requirements of 2.3.4.8 — 2.3.4.22
27	Details of mechanical joints of piping systems (refer to 2.4.5, Part VIII "Systems and Piping")
28	Documentation verifying compliance with inclination limits (refer to 2.3, Part VII "Machinery Installations")
29	Documents as required in Chapter 7.10, Part XV "Automation", as applicable

[1]For approval of materials and weld procedure specifications. The weld procedure specification is to include details of pre and post weld heat treatment, weld consumables and fit-up conditions.
[2]For each cylinder for which dimensions and details differ.
[3]For comparison with the Register requirements for material, NDT and pressure testing as applicable.
[4]All engines.
[5]Only for engines of a cylinder diameter of 200 mm or more or a crankcase volume of 0,6 m3 or more.
[6]The documentation to contain specifications for pressures, pipe dimensions and materials.
[7]The type test report may be submitted shortly after the conclusion of the type test (refer to 5.14, Part IV "Technical Supervision during Manufacture of Products" of the Rules for Technical Supervision during Construction of Ships and Manufacture of Materials and Products for Ships).

.2.16 strength calculations of machinery parts, regulated by the Rules;

.2.17 list of main parts of machinery with material specification and all details for test pressure values (if required);

.2.18 operation and service manuals;

.2.19 test programs for prototype and production models of machinery.

Note. Additional requirements on the scope of technical documentation on turbochargers of internal combustion engines (refer to 2.5.7.6).

1.2.4 Drawings of machinery parts listed in paras 2 — 10 of Table 1.2.4 but not mentioned in 1.2.3 are subject to agreement with the Register.

In the process of manufacture all these parts are subject to survey by the Register regarding their compliance with the approved technical documentation and the requirements of Part XIII "Materials" and Part XIV "Welding".

1.2.5 Rotors, shafts and disks of steam turbines and gas turbines engines, as well as the bolts for joints of casings of high pressure turbines are subject to ultrasonic testing during manufacture. Shafts of main gears more than 100 kg in mass, pinions, tooth rims more than 250 kg in mass are subject to ultrasonic testing during manufacture.

T a b l e 1.2.4

Nos	Item	Material	Chapter of Part XIII "Materials"
1	**Internal combustion engines**		
1.1	Bedplate, crankcase, frames, thrust bearing casing, main bearing caps of suspended crankshafts	Cast iron	3.9, 3.10
		Cast steel	3.8
		Forged steel	3.7
		Rolled steel	3.2
		Aluminium alloy	5.2
1.2	Cylinder block, cylinder covers, valve housings	Cast iron	3.9, 3.10
		Cast steel	3.8
		Forged steel	3.7
1.3	Cylinder liners and their parts	Cast iron	3.9, 3.10
		Cast steel	3.8
		Forged steel	3.7
1.4	Piston	Cast iron	3.9, 3.10
		Cast steel	3.8
		Forged steel	3.7
		Aluminium alloy	5.2
1.5	Piston rod, crossheads, gudgeon pins	Forged steel	3.7
1.6	Connecting rod with crank bearing covers	Forged steel	3.7
		Cast steel	3.8
1.7	Crankshaft, thrust shaft of the built-in thrust bearing	Forged steel	3.7
		Cast steel	3.8
		Cast iron	3.9
1.8	Crankshaft detachable couplings	Forged steel	3.7
		Cast steel	3.8
1.9	Bolts and studs of the crossheads, main and connecting rod bearings, cylinder covers	Forged steel	3.7
1.10	Tie rods	Forged steel	3.7
1.11	Inlet and outlet valves	Forged steel	3.7
1.12	Connecting bolts of crankshaft sections	Forged steel	3.7
1.13	Supercharger, i.e. shaft and rotor including blades (turbochargers and starting compressors (inclusive of Roots blowers) except auxiliary blowers)	Forged steel	3.7
1.14	Camshaft, camshaft drive gears	Forged steel	3.7
1.15	Speed governors and overspeed devices	—	—
1.16	Safety valves of the crankcase (for engines having a bore exceeding 200 mm)	—	—
1.17	Counterweights if they are not integral with the crankshaft	Forged steel	3.7
		Cast steel	3.8
		Cast iron	3.9
1.18	Main, connecting-rod, crank bearings	—	—
1.19	High pressure fuel oil pumps	—	—
1.20	Nozzles	—	—
1.21	High-pressure oil fuel injection pipes	Rolled steel	3.4
2	**Steam turbines**		
2.1	Casings of turbines	Cast iron	3.9, 3.10
		Cast steel	3.8
		Rolled steel	3.3
2.2	Manoeuvring gear casings, nozzle boxes	Cast steel	3.8
2.3	Solid-forged rotors, shafts and disks	Forged steel	3.7
2.4	Blades	Forged steel	3.7
		Cast steel	3.8
2.5	Shrouds and lashing wire	—	—
2.6	Nozzles and diaphragms	Cast iron	3.9, 3.10
		Forged steel	3.7
		Cast steel	3.8
2.7	Gland seals	—	—
2.8	Couplings	Forged steel	3.7
		Cast steel	3.8
2.9	Bolts for joints of rotor parts, split casings and couplings	Forged steel	3.7
3	**Gears, elastic and disengaging couplings**		
3.1	Casing	Rolled steel	3.2
		Forged steel	3.7
		Cast steel	3.8
		Cast iron	3.9, 3.10
		Aluminium alloy	5.2
3.2	Shafts	Forged steel	3.7
3.3	Pinions, wheels, wheel rims	Forged steel	3.7
3.4	Coupling components transmitting the torque:	Cast steel	3.8

Table 1.2.4 — continued

Nos	Item	Material	Chapter of Part XIII "Materials"
	.1 rigid components	Rolled steel	3.2
		Forged steel	3.7
		Cast steel	3.8
		Cast iron	3.9
		Aluminium alloy	5.1, 5.2
		Rubber, synthetic material	—
	.2 elastic components	Spring steel	—
3.5	Coupling bolts	Forged steel	3.7
4	**Compressors and piston-type pumps**		
4.1	Crankshaft	Forged steel	3.7
		Cast steel	3.8
		Cast iron	3.9
4.2	Piston rod	Forged steel	3.7
4.3	Connecting rod	Forged steel	3.7
		Cast iron	3.9
		Aluminium alloy	5.2
4.4	Piston	Forged steel	3.7
		Cast steel	3.8
		Cast iron	3.9, 3.10
		Cooper alloy	4.1
		Aluminium alloy	5.2
4.5	Cylinder block, cylinder covers	Cast steel	3.8
		Cast iron	3.9, 3.10
4.6	Cylinder liner	Cast iron	3.9. 3.10
5	**Centrifugal pumps, fans and air blowers**		
5.1	Shaft	Rolled steel	3.2
		Forged steel	3.7
5.2	Impeller	Cast steel	3.8
		Copper alloy	4.1
		Aluminium alloy	5.2
5.3	Casing	Rolled steel	3.2
		Cast steel	3.8
		Cast iron	3.9, 3.10
		Copper alloy	4.1
		Aluminium alloy	5.2
6	**Steering gear**		
6.1	Tiller of main and emergency gear	Forged steel	3.7
		Cast steel	3.8
6.2	Rudder quadrant	Cast steel	3.8
6.3	Rudder stock yoke	Forged steel	3.7
6.4	Pistons with rods	Forged steel	3.7
		Cast steel	3.8
6.5	Cylinders	Steel tube	3.4
		Cast steel	3.8
		Cast iron	3.9, 3.10
6.6	Drive shaft	Forged steel	3.7
6.7	Pinions, gear wheels, tooth rims	Forged steel	3.7
		Cast steel	3.8
		Cast iron	3.9
7	**Windlasses, capstans, mooring and towing winches**		
7.1	Drive, intermediate and output shafts	Forged steel	3.7
7.2	Pinions, gear wheels and tooth rims	Forged steel	3.7
		Cast steel	3.8
		Cast iron	3.9
7.3	Sprockets	Cast steel	3.8
		Cast iron	3.9, 3.10
7.4	Claw clutches	Forged steel	3.7
		Cast steel	3.8
7.5	Band brakes	Rolled steel	3.2
8	**Hydraulic drives, screw, gear and rotary pumps**		
8.1	Shaft, screw, rotor	Forged steel	3.7
		Cast steel	3.8
		Copper alloy	4.1

Table 1.2.4 — continued

Nos	Item	Material	Chapter of Part XIII "Materials"
8.2	Piston rod	Forged steel	3.7
		Copper alloy	4.1
8.3	Piston	Forged steel	3.7
		Cast steel	3.8
8.4	Casing, cylinder and housing of screw pump	Cast steel	3.8
		Cast iron	3.9, 3.10
		Copper alloy	4.1
8.5	Pinions	Forged steel	3.7
		Cast steel	3.8
		Cast iron	3.9, 3.10
		Copper alloy	4.1
9	**Centrifugal fuel and lubricating oil separators**		
9.1	Bowl shaft	Forged steel	3.7
9.2	Bowl body, bowl discs	Forged steel	3.7
9.3	Drive pinions	Forged steel	3.7
		Copper alloy	4.1
10	**Gas turbines**		
10.1	Casings of turbines and compressors, diaphragms and combustion chamber casings	Rolled steel	3.3
		Cast steel	3.8
10.2	Rotors and discs of turbines	Forged steel	3.7
10.3	Rotors and discs of compressors	Forged steel	3.7
10.4	Turbine blades	Rolled steel	3.3
		Forged steel	3.7
		Cast steel	3.8
10.5	Compressor blades	Forged steel	3.7
		Cast steel	3.8
10.6	Shrouds and lashing wire	—	—
10.7	Flame tubes of combustion chambers	Rolled steel	3.3
10.8	Heat-exchanging surfaces of regenerators	Rolled steel	3.3
10.9	Sealings	—	—
10.10	Flanges of couplings	Forged steel	3.7
		Cast steel	3.8
10.11	Bolts for joints of rotor parts, turbine and compressor split casings	Forged steel	3.7

N o t e . The materials shall be selected in accordance with the requirements of 1.6 considering 1.6.7.

Parts of internal combustion engines of steel are also subject to ultrasonic testing during manufacture in accordance with the requirements of Table 1.2.5.

T a b l e 1.2.5

Nos	Cylinder bore, mm	Part No. according to Table 1.2.4
1	Up to 400 inclusive	1.1, 1.2, 1.4, 1.6 and 1.7
2	More than 400	1.1, 1.2, 1.4, 1.5 to 1.7

Ultrasonic testing shall be carried out in accordance with the requirements of 2.2.9.2, Part XIII "Materials".

1.2.6 For the internal combustion engines the steel case and forged parts listed in Table 1.2.6, their welded joints included, shall be tested during the manufacture for the absence of the surface defects by the magnetic particle or dye penetrant method and they are also subject to ultrasonic testing. The list of parts and components shall be set in accordance with the requirements of Table 2.2.2 of Appendix 8 to Section 5, Part IV Technical Supervision During Manufacture of Materials" of the Rules for Technical Supervision During Construction of Ships and Manufacture of Materials and Products for Ships.

The runner blades of main and auxiliary steam turbines, guide blades of main turbines and turbine blades of gas turbine engines shall also be subjected to the above testing.

1.2.7 If there are doubts about the absence of defects in the part material, the Register may require to carry out non-destructive testing of other machinery parts and their welded joints.

1.3 HYDRAULIC TESTS

1.3.1 The machinery parts, with the exception of the internal combustion engine parts, operating under excessive pressure shall be subjected to a hydraulic test by a pressure p_{test} after final machining and before protective coating is applied. The hydraulic test pressure p_{test}, in MPa, is found by the formula

$$p_{test} = (1{,}5 + 0{,}1k)p \qquad (1.3.1)$$

where p = maximum working pressure, MPa;
k = factor taken from Table 1.3.1.

In all cases, the value of test pressure shall not be lower than the pressure setting with the safety valve fully open, but not less than 0,4 MPa for cooled spaces of parts and various seals and not less than 0,2 MPa in all other cases. If temperatures or working pressures exceed the ratings indicated in Table 1.3.1, the value of test pressure shall be approved by the Register in each case.

Table 1.3.1

Material	Characteristic	Working temperature, °C, up to									
		120	200	250	300	350	400	430	450	475	500
Carbon steel	p, MPa	—	20	20	20	20	10	10	10	—	—
	k	0	0	1	3	5	8	11	17	—	—
Molybdenum and molybdenum-chrome steel with at least 0,4 % molybdenum content	p, MPa	—	—	—	—	20	20	20	20	20	20
	k	0	0	0	0	0	1	2	3,5	6	11
Cast iron	p, MPa	6	6	6	6	—	—	—	—	—	—
	k	0	2	3	4	—	—	—	—	—	—
Bronze, brass and copper	p, MPa	20	3	3	—	—	—	—	—	—	—
	k	0	3,5	7	—	—	—	—	—	—	—

1.3.2 The machinery parts and assemblies may be tested separately along the spaces by test pressures prescribed in compliance with the working pressures and temperatures inside each space.

1.3.3 Parts of internal combustion engines shall be tested according to the requirements specified in Table 2.2.2 of Appendix 8 to Section 5, Part IV "Technical Supervision during Manufacture of Products" of the Rules for Technical Supervision during Construction of Ships and Manufacture of Materials and Products for Ships.

1.3.4 The machinery parts and assemblies filled with petroleum products or their vapours (viz., reduction gear casings, sumps, etc.) under hydrostatic or atmospheric pressure shall be tested for oil-tightness by the method approved by the Register. Oil-tightness tests of welded structures may be confined to welds only.

1.4 OPERATION TESTS

1.4.1 On completion of assembly, adjustment and running-in, each piece of machinery shall be bench tested under the load conditions prior to installation aboard the ship. The test program shall be approved by the Register.

In particular cases, bench tests may be substituted by tests aboard the ship on agreement with the Register.

1.4.2 The pilot models of the machinery shall be tested under a program providing for checking reliability and long-term operational capacity of certain unit components and of the machinery as a whole.

1.5 GENERAL TECHNICAL REQUIREMENTS

1.5.1 Machinery indicated in 1.1 shall remain operative under environmental conditions specified in 2.3, Part VII "Machinery Installations".

1.5.2 The design of the main engines intended for installation aboard single-shaft ships shall provide, as a rule, for a possibility of emergency operation at reduced power in case of a failure of parts, the replacement of which cannot be carried out aboard the ship or demands much time.

1.5.3 The forged, cast and welded steel parts, as well as cast iron parts of the machinery shall be heat treated during manufacture in compliance with the requirements of 3.7.4, 3.8.4, 3.9.4, 3.10.4, Part XIII "Materials" and 2.1.16, Part XIV "Welding".

1.5.4 The fasteners used in moving parts of machinery and gears, as well as fasteners difficult for access shall be properly designed or shall have special arrangements aimed at preventing their self-loosening and self-releasing.

1.5.5 The heated surfaces of machinery and equipment shall be insulated according to the requirements of 4.6, Part VII "Machinery Installations".

1.5.6 The machinery parts that are in contact with a corrosive medium shall be made of an anticorrosive material or shall have corrosion-resistant coatings.

Sea water cooling spaces of engines and coolers shall be provided with protectors.

1.5.7 The remote and automatic control and protection systems, the warning alarms included, shall comply with the requirements specified in Part XV "Automation".

1.5.8 Pumping and piping of machinery shall comply with the relevant requirements of Part VIII "Systems and Piping".

1.5.9 Electrical equipment of engines and auxi-liaries shall comply with the relevant requirements of Part XI "Electrical Equipment".

1.6 MATERIALS AND WELDING

1.6.1 Materials intended for manufacture of the machinery parts stated in column 4 of Table 1.2.4 shall comply with the requirements of the appropriate chapters of Part XIII "Materials". Materials of parts stated in Table 1.2.4 may be also selected according to the standards. In this case, the application of materials is subject to agreement with the Register during consideration of the technical documentation.

1.6.2 Materials of parts listed in 2.1 to 2.4, 2.6, 3.2, 3.3, 3.4.1, 4.1, 6.1, 6.6, 7.1, 10.1 to 10.5 of Table 1.2.4 are subject to survey by the Register during manufacture.

Materials of the parts of internal combustion engines are subject to survey by the Register in accordance with Appendix 8 to Section 5, Part IV "Technical Supervision During Manufacture of Materials" of the Rules for Technical Supervision During Construction of Ships and Manufacture of Materials and Products for Ships.

At the discretion of the Register the survey may also be required during manufacture of pipes and valves of the pressure systems associated with the engine.

1.6.3 When the alloy steels, including heat resistant, high temperature oxidation resistant and high strength steels, or alloy cast iron is used for the machinery parts, the information on chemical composition, mechanical and special properties confirming suitability of the material for intended application shall be submitted to the Register.

1.6.4 The parts of steam turbines and gas turbine engines operating under the conditions of high temperatures (400 °C and above) shall be subjected to tensile tests at the design temperature and, if necessary, the Register may require to submit the information on the average stress to produce rupture in 100000 hours at the design temperature.

1.6.5 Spheroidal or nodular graphite cast iron is allowed for use up to the temperature of 300 °C, and grey cast iron — up to 250 °C.

1.6.6 Manufacture of the machinery parts with application of welding shall comply with the requirements of Part XIV "Welding".

1.6.7 In internal combustion engine installations with turbines and gears, the application of materials other than steel may be assessed in relation to the risk of fire associated with component and its installation. The use of materials other than steel is considered acceptable for the following applications:

.1 internal pipes which cannot cause any release of flammable fluid onto the machinery or into the machinery space in case of failure;

.2 components that are only subject to liquid spray on the inside when the machinery is running, such as machinery covers, camshaft end covers, rocker box covers, inspection plates and sump tanks. Refer also to 2.1.10, Part VIII "Systems and Piping";

.3 components attached to machinery which satisfy fire test criteria according to the applicable national or international standards thus maintaining mechanical properties sufficient for their intended application (also refer to 2.1.10, Part VIII "Systems and Piping").

2 INTERNAL COMBUSTION ENGINES

2.1 GENERAL PROVISIONS

2.1.1 The requirements of the present Section are applicable to all internal combustion engines of power output 55 kW and above. The scope of requirements to the engines of power output less than 55 kW may be reduced regarding to their structural features and purpose.

The requirements for dual-fuel internal combustion engines are specified in Section 9.

The Register may impose additional requirements upon the design, scope of surveys and tests of internal combustion engines with electronic control systems, based on the regulating documents developed by the Register.

2.2 GENERAL REQUIREMENTS

2.2.1 The engines shall be capable of working with an overload exceeding the rated power by at least 10 per cent for not less than one hour.

2.2.2 The engines intended to be used as main engines shall also comply with the requirements of 2.1, Part VII "Machinery Installations".

2.2.3 Irregularity of speed of a.c. diesel generating sets intended for parallel operation shall be such that the amplitude of angle oscillations of the generator shaft does not exceed 3,5°/*P*, where *P* is the number of pairs of generator poles.

2.2.4 The crosshead-type engines, which scavenge spaces are in open connection with the cylinders, shall be provided with the fire extinguishing system approved by the Register, which is entirely separate from the fire extinguishing system of the engine room (refer to Table 3.1.2.1, Part VI "Fire Protection").

The scavenge spaces of the main engines in ships with unattended machinery spaces of category A shall be equipped with a timely fire alarm and fire detection system (refer to 4.2.3.1, Part VI "Fire Protection").

2.2.5 The diesel generating sets intended as emergency units shall be provided with self-contained fuel supply, cooling and lubricating systems.

Cooling systems are considered to be self-contained if they are independent of the equipment specified in 4.3, Part VIII "Systems and piping".

2.2.6 Engines intended to drive emergency ge-nerators, which may be also used as sources of electrical power for non-emergency consumers (refer to 9.4.2, Part XI "Electrical Equipment") shall be equipped with oil fuel and lubricating oil filters, as well as with monitoring equipment, alarm and protective devices as required for prime movers of the main sources of electrical power when in unattended operation. Along with that, their oil fuel supply tanks shall be fitted with a low level alarm arranged at a level ensuring sufficient oil fuel capacity for the emergency services (refer to 13.8.5, Part VIII "Systems and Piping").

Besides, such engines shall be designed for continuous operation and shall be subjected to a planned maintenance scheme ensuring that it is always available and capable of fulfilling its role in the event of an emergency at sea.

2.2.7 The rated power of the engines shall be determined under the following conditions:

atmospheric pressure, kPa —100;

air temperature, °C — 45;

relative humidity, % — 60;

sea water temperature, °C — 32.

Other conditions may be specified in compliance with 2.3.1, Part VII "Machinery Installations".

2.2.8 In the crankshaft speed range $(0-1{,}2)\ n_r$, where n_r is the rated speed, no restricted speed areas shall be permitted. Along with that, the requirements of 8.8.3 to 8.8.5, Part VII "Machinery Installations" shall be met.

2.2.9 Fuel oil and lubricating oil pipes, valves, flanged connections, filters shall be screened or otherwise protected so that in case of their failure petroleum products falling onto hot surfaces (refer to 4.6, Part VII "Machinery Installations") is prevented.

2.2.10 Where special tools and gauges are required for maintenance purposes in compliance with 1.2.3.1.22, these shall be supplied by the manufacturer. Engine servicing shall be performed in compliance with the manufacturer's recommendations.

2.2.11 For engines with electronic control system where the basic operation processes (fuel supply, gas exchange, starting and reversing, cylinder lubrication) are performed by means of hydraulic (pneumatic) systems controlled by programmable electronic devices upon a signal from the crankshaft-position sensor, a single failure of any component of the electronic control system shall not result in the loss of manoeuvrability or in spontaneous stoppage of the engine (refer to 1.2.3.1.26).

2.3 ENGINE FRAME

2.3.1 The mating surfaces of the frame parts forming the engine crankcase shall be close-fitting and oil- and gastight as well as be fixed together by means of calibrating pieces.

2.3.2 The engine frame and conjugated parts shall be provided with draining arrangements (drain grooves, pipes, etc.) and other facilities preventing penetration of fuel and water into the circulating oil.

The cooling spaces of the cylinder blocks shall be fitted with drain arrangements providing complete drainage.

2.3.3 Engines with a cylinder bore in excess of 230 mm shall be fitted with alarm devices to give a signal indicating that the specified excess of the maximum combustion pressure in a cylinder has been reached.

2.3.4 Protection of internal combustion engines against crankcase explosions.

2.3.4.1 Crankcase construction and crankcase doors shall be of sufficient strength to withstand anticipated crankcase pressures that may arise during a crankcase explosion taking into account the installation of explosion relief valves required by 2.3.5. Crankcase doors are to be fastened sufficiently securely for them not to be readily displaced by a crankcase explosion.

2.3.4.2 Additional relief valves shall be fitted on separate spaces of crankcase such as gear or chain cases for camshaft or similar drives, when the gross volume of such spaces exceeds 0,6 m^3 (considering 2.3.5.2 and 2.3.5.3).

2.3.4.3 Scavenge spaces in open connection to the cylinders shall be fitted with explosion relief valves.

2.3.4.4 Design, arrangement and location of explosion relief valves shall comply with the requirements of 2.3.5.

2.3.4.5 Ventilation of crankcase, and any arrangement which could produce a flow of external air within the crankcase, is in principle not permitted except for dual fuel engines where crankcase ventilation shall be provided in accordance with 9.3.2.

2.3.4.5.1 Crankcase ventilation pipes, where provided, shall be as small as practicable to minimize the inrush of air after a crankcase explosion. The ends of the ventilation pipes shall be fitted with lame-arresting devices and arranged so as to prevent water from getting into engine.

Ventilation pipes shall be laid to the weather deck to locations preventing the suction of vapors into accommodation and service spaces.

For engines with power output up to 750 kW suction of gas from the crankcase by turbochargers or blowers may be admitted, provided reliable oil separators are fitted to prevent the oil from being carried into the engine with suction gas.

2.3.4.5.2 If a forced extraction of the oil mist atmosphere from the crankcase is provided (for mist detection purposes, for instance), the vacuum in the crankcase shall not exceed 250 Pa.

2.3.4.5.3 To avoid interconnection between crankcases and the possible spread of fire following an explosion, crankcase ventilation pipes and oil drain pipes for each engine shall be independent of any other engine.

2.3.4.6 Lubricating oil drain pipes from the engine sump to the drain tank shall be submerged at their outlet ends.

Crankcase drain outlets shall be fitted with grates and grids preventing foreign objects from getting into the drain piping. The above requirement is also applied to engines with dry crankcase.

2.3.4.7 A warning notice shall be fitted either on the control stand or, preferably, on a crankcase door on each side of the engine. This warning notice shall specify that, whenever overheating is suspected within the crankcase, the crankcase doors or sight holes shall not be opened before a reasonable time, sufficient to permit adequate cooling after stopping the engine.

2.3.4.8 Oil mist detection arrangements (or engine bearing temperature monitors or equivalent devices) are required:

.1 for alarm and slow down purposes for low speed diesel engines of 2250 kW and above or having cylinders of more than 300 mm bore (refer also to Table 4.2.10-1, Part XV "Automation");

.2 for alarm and automatic shutoff purposes for medium and high speed diesel engine of 2250 kW and above or having cylinders of more than 300 mm bore (refer also to Tables 4.2.10-2, 4.4.6-2, Part XV "Automation").

Oil mist detection arrangements shall be of a type approved by the Register and comply with the requirements of 2.3.4.9 and 2.3.4.20. The type test procedure for the crankcase oil mist detection arrangements are set forth in Appendix 11 to Section 5, Part IV "Technical Supervision during Manufacture of Products" of Rules for Technical Supervision during Construction of Ships and Manufacture of Materials and Products for Ships.

Engine bearing temperature monitors or equivalent devices used as safety devices shall be of a type approved by the Register for such purposes.

Notes: 1. For the purpose of the requirements given in 2.3.4.8.1 and 2.3.4.8.2, the following definitions apply.
Low-speed engines mean diesel engines having a rated speed less than 300 rpm.
Medium-speed engines mean diesel engines having a rated speed of 300 rpm and above, but less than 1400 rpm.
High-speed engines mean diesel engines having a rated speed of 1400 rpm and above.
2. An equivalent device could be interpreted as measures applied to high-speed engines where specific design features to preclude the risk of crankcase explosions are incorporated.

2.3.4.9 The oil mist detection system and arrangements shall be installed in accordance with the engine designer's and oil mist detection arrangements manufacturer's instructions/recommendations. The following particulars shall be included in the instructions:

.1 schematic layout of engine oil mist detection and alarm system showing location of engine crankcase sample points and piping or cable arrangements together with pipe dimensions to detector;

.2 evidence of study to justify the selected location of sample points and sample extraction rate

(if applicable) in consideration of the crankcase arrangements and geometry and the predicted crankcase atmosphere where oil mist can accumulate;

.3 the manufacturer's maintenance and test manual;

.4 information relating to type or in-service testing of the engine with engine protection system test arrangements having approved types of oil mist detection equipment.

2.3.4.10 An engine installed on board ship shall be provided with a manufacturer's maintenance and test manual of oil mist detection arrangements according to 2.3.4.9.

2.3.4.11 Oil mist detection and alarm information shall be capable of being read from a safe location away from the engine.

2.3.4.12 Each engine shall be provided with its own independent oil mist detection arrangement and a dedicated alarm.

2.3.4.13 Oil mist detection and alarm systems shall be capable of being tested on the test bed and board under engine at standstill and engine running at normal operating conditions in accordance with test procedures approved by the Register.

2.3.4.14 Alarms and shutdowns for the oil mist detection system shall be in accordance with the requirements of Part XV "Automation".

2.3.4.15 The oil mist detection arrangements shall provide an alarm indication in the event of a foreseeable functional failure in the equipment and installation arrangement.

2.3.4.16 The oil mist detection system shall provide an indication that any lenses fitted in the equipment and used in determination of the oil mist level have been partially obscured to a degree that will affect the reliability of the information and alarm indication.

2.3.4.17 Where oil mist detection equipment includes the use of programmable electronic systems, the arrangements shall comply with 7.10 "Programmable electronic systems", Part XV "Automation" of the Rules for the Classification and Construction of Sea-Going Ships.

2.3.4.18 Plans showing details and arrangements of oil mist detection and alarm arrangements shall be approved by the Register.

2.3.4.19 The equipment together with detectors shall be tested when installed on the test bed and on board ship to demonstrate that the detection and alarm system functionally operates. The testing arrangements shall be approved by the Register.

2.3.4.20 Where sequential oil mist detection arrangements are provided the sampling frequency and time shall be as short as reasonably practicable.

2.3.4.21 Where alternative methods are provided for the prevention of the build-up of oil mist that may lead to a potentially explosive condition within the crankcase details, they shall be agreed upon with the Register and provided with the technical substantiation submitted to the Register. In addition to 1.2.3.1.19, the following information shall be included in the details to be submitted for consideration:

.1 engine particulars – type, power, speed, stroke, bore and crankcase volume;

.2 details of arrangements preventing the build up of potentially explosive conditions within the crankcase, e. g., bearing temperature monitoring, oil splash temperature, crankcase pressure monitoring and recirculation arrangements;

.3 evidence to demonstrate that the arrangements are effective in preventing the build up of potentially explosive conditions together with details of in-service experience;

.4 operating instructions and the maintenance and test instructions.

2.3.4.22 Where it is proposed to use the introduction of inert gas into crankcase to minimize a potential crankcase explosion, details of the arrangements shall be submitted to the Register for consideration.

2.3.5 Engine crankcase explosion relief valves.

2.3.5.1 Engines having a cylinder bore of 200 mm and above or a crankcase volume of 0,6 m3 and above shall be provided with crankcase explosion relief valves in accordance with 2.3.4.2, 2.3.5.2 and 2.3.5.13 as follows:

.1 engines having a cylinder bore not exceeding 250 mm shall have at least one valve near each end, but, if the crankshaft of these engines has over 8 crankthrows, an additional valve shall be fitted near the middle of the engine;

.2 engines having a cylinder bore exceeding 250 mm but not exceeding 300 mm shall have at least one valve in way of each alternate crankthrow, with at least two valves per the crankcase in all cases;

.3 engines having a cylinder bore exceeding 300 mm shall have at least one valve in way of each main crankthrow.

2.3.5.2 The free area of each relief valve shall be not less than 45 cm^2.

2.3.5.3 The combined free area of the valves fitted on an engine shall be not less than 115 cm^2 per 1 m^3 of the crankcase gross volume. In estimating the crankcase gross volume the stationary parts may be discounted (however, the rotary and reciprocating components shall be included into the gross volume).

2.3.5.4 Crankcase explosion relief valves shall be provided with lightweight spring-loaded valve discs or other quick-acting and self-closing devices to relieve a crankcase of pressure in the event of an internal explosion and to prevent the inrush of air thereafter.

2.3.5.5 The valve discs in crankcase explosion relief valves shall be made of ductile material capable of withstanding the shock of contact with stoppers at the full open position.

2.3.5.6 Crankcase explosion relief valves shall be designed to open quickly and be fully open at an over-pressure in the crankcase of not greater than 0,02 MPa.

2.3.5.7 Crankcase explosion relief valves shall be provided with flame arresters that permits flow for crankcase pressure relief and prevents passage of flame following a crankcase explosion.

2.3.5.8 Crankcase explosion relief valves shall be of type approved by the Register and be tested in a configuration that represents the installation arrangements that will be used on an engine. The requirements for type tests of valves are specified in Appendix 10 to Section 5, Part IV "Technical Supervision during Manufacture of Products" of the Rules for Technical Supervision during Construction of Ships and Manufacture of Materials and Products for Ships.

2.3.5.9 Where crankcase explosion relief valves are provided with arrangements for shielding emissions from the valve following an explosion, the valve shall be type tested to demonstrate that the shielding does not adversely affect the operational effectiveness of the valve.

2.3.5.10 In a delivery set of crankcase explosion relief valves a copy of the manufacturer's installation and maintenance manual shall be provided that is pertinent to the size and type of valve being supplied for installation on a particular engine. The manual shall contain the following information:

.1 description of the valve with details of functional and design limits;

.2 copy of Type Approval/Test Certificate;

.3 installation instruction;

.4 maintenance and in-service instructions including testing and replacement of any sealing arrangements;

.5 actions required after a crankcase explosion.

2.3.5.11 A copy of the manual specified in 2.3.5.10 shall be kept on board ship together with the valve after its installation (refer also to 5.2.3.3.2, Part IV "Technical Supervision during Manufacture of Products" of the Rules for Technical Supervision during Construction of Ships and Manufacture of Materials and Products for Ships).

2.3.5.12 Details of crankcase explosion relief valves design and arrangement shall be submitted for the Register approval in addition to 1.2.3.1.19.

2.3.5.13 Valves shall be provided with suitable marking including the following information:

.1 name and address of the manufacturer;

.2 designation and size;

.3 date of manufacture;

.4 approved installation orientation.

2.4 CRANKSHAFTS

2.4.1 The check calculation method as described below is applicable to solid-forged and semi-built crankshafts of forged or cast steel intended for marine diesel engines having the cylinders either in line or in V-arrangement, with one crankthrow between main bearings.

Cast iron crankshafts may be approved on agreement with the Register, provided calculations considering the applicable requirements of Appendices III, V and VI to Section 2 and experimental data obtained in compliance with the requirements of Appendix IV to Section 2 are submitted. Thus, the assumed safety factors shall be justified.

2.4.2 The outlets of oil bores into crankpins and journals shall be formed in such a way that the safety margin against fatigue at the oil bores is not less than that acceptable in the fillets. The engine manufacturer, if requested by the Register, shall submit documentation supporting his oil bore design.

2.4.3 For the calculation of crankshafts, the documents and particulars listed in the following shall be submitted:

crankshaft drawing, which shall contain all scantlings required by the Chapter;

type designation and kind of engine (in-line engine or V-type engine with adjacent connecting rods, forked connecting rod or articulated-type connecting rod);

operating and combustion method (direct injection, precombustion chamber, etc.);

number of cylinders;

rated power, kW;

rated engine speed, min^{-1};

sense of rotation (Fig. 2.4.3-1);

firing order with the respective ignition intervals and, where necessary, V-angle α_v, deg. (refer to Fig. 2.4.3-1);

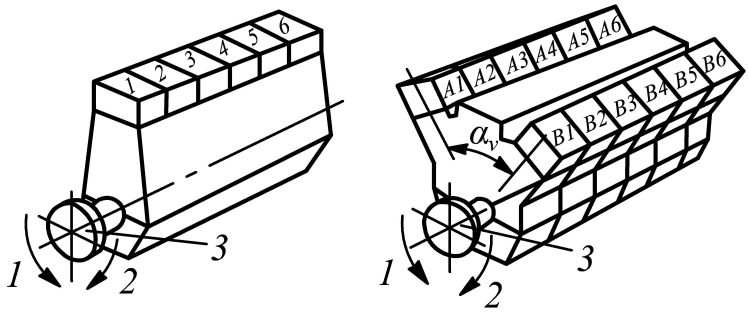

Fig. 2.4.3-1 Sense of crankshaft rotation:
1 — counter-clockwise; *2* — clockwise; *3* — driving shaft flange

cylinder diameter, mm;

stroke, mm;

maximum cylinder pressure P_{max}, MPa;

charge air pressure, in MPa, before inlet valves or scavenge ports, whichever applies;

nominal compression ratio;

connecting rod length L_H, mm;

oscillating weight of one crank gear, in kg (in case of V-type engines, where necessary, also for the cylinder unit with master and articulated-type connecting rod or forked and inner connecting rod);

digitalized gas-pressure-versus-crank-angle curve presented at equidistant intervals and integrally divisible by the V-angle, but not more than 5°.

For bending moments, shearing forces and torques, refer to 2.4.4.2, 2.4.5.1.

Details of crankshaft material:

material designation (according to standards, etc.);

chemical composition;

tensile strength, σ_B, MPa;

yield stress, σ_S, MPa;

reduction in area at break, Z, %;

elongation, A_5, %;

impact energy, KV, J;

method of material melting process (basic oxygen furnace, open-hearth furnace, electric furnace, etc.);

type of forging (free form forged, continuous grain flow forged, drop forged, etc.; with description of the forging process);

heat treatment;

surface treatment of journal and crankpin fillets and oil bore outlets (induction hardening, flame hardening, nitriding, rolling, shot peening and so on with description of hardening process) (refer to Appendix V to Section 2);

hardness at surface, HV;
hardness as a function of depth, mm;
extension of surface hardening.

For engines with articulated-type connecting rod (refer to Fig. 2.4.3-2), the following details shall be submitted additionally:

distance to link point L_A, mm;
link angle α_N, deg.;
connecting rod length L_H, mm;
articulated-type connecting rod length L_N, mm.

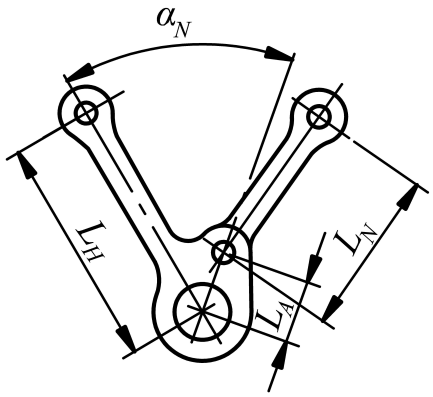

Fig. 2.4.3-2 Articulated-type connecting rod

2.4.4 Calculation of alternating stresses due to bending moments and shearing forces.

2.4.4.1 Assumptions.

The calculation is based on a statically determined system, so that only one single crankthrow is considered of which the journals are supported in the centre of adjacent bearings and which is subject to gas and inertia forces (refer to Figs. 2.4.4.1-1 and 2.4.4.1-2).

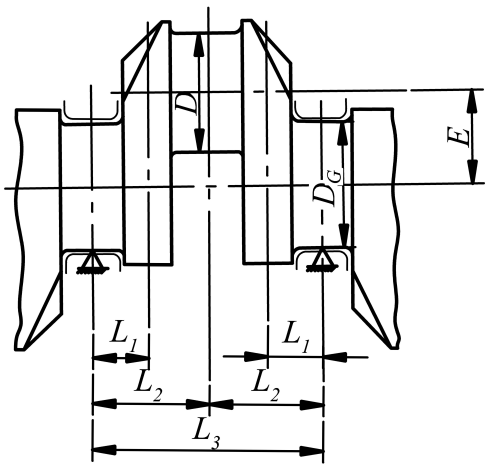

Fig. 2.4.4.1-1 Crank throw for in-line engine

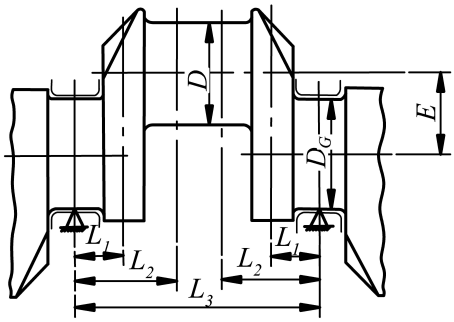

Fig. 2.4.4.1-2 Crank throw for engine with 2 adjacent connecting rods

The nominal bending moment is taken as a moment with the bending lever (distance L_1 for fillets and L_2 for oil bore, for semi-built crankshafts with recess of crankpin exceeding the value of the radius of that crankpin fillet, the distance L_1 is specified as shown on Fig. 2.4.6.1-2), due to the radial components of the connecting rod force. For crankthrows with two connecting rods acting upon one crankpin the nominal bending moment is taken as a bending moment obtained by superposition of two bending moment loads according to phase.

The nominal alternating stresses due to bending moments and shearing forces shall be related to the cross-sectional area of the crank web in the centre of the overlap of the pins (refer to Fig 2.4.6.1-1) or passing though the centre of the fillet radius of the crankpin for pins which do not overlap (refer to Fig. 2.4.6.1-2).

2.4.4.2 Calculation of nominal alternating bending and shearing stresses.

The maximum and minimum bending moment values $M_{B\max}$, $M_{BO\max}$, $M_{B\min}$ and $M_{BO\min}$ as well as the maximum and minimum shearing force values $Q_{\max}$ and $Q_{\min}$ shall be submitted to the Register, determined by calculating the radial forces acting upon the crankpin owing to gas and inertia forces.

On agreement with the Register, a simplified calculation of the radial forces may be submitted.

The nominal alternating bending moment M_{BN}, in N·m, shall be determined as

$$M_{BN} = \pm\frac{1}{2}(M_{B\max} - M_{B\min}). \qquad (2.4.4.2\text{-}1)$$

The nominal alternating bending stress in fillets σ_{BN}, in MPa, shall be determined by the formula

$$\sigma_{BN} = \pm\frac{M_{BN}}{W_{eq}}10^3 K_e \qquad (2.4.4.2\text{-}2)$$

where $W_{eq} = BW^2/6$
W_{eq} = equatorial moment of resistance related to cross-sectional area of web, mm^3;
B and M = refer to 2.4.6;
K_e = factor equal to 0,8 for 2-stroke engines and 1,0 for 4-stroke engines.

The nominal alternating shearing stress in fillets σ_{QN}, MPa, shall be determined by the formula

$$\sigma_{QN} = \pm\frac{Q_N}{F}K_e \qquad (2.4.4.2\text{-}3)$$

where $Q_N = \pm 0{,}5(Q_{\max} - Q_{\min})$;
Q_N = nominal alternating shearing force, N;
$F = BW$;
F = area related to cross-section of web, mm^2.

Nominal alternating bending stress in outlet of crankpin oil bore, σ_{BON}, MPa, shall be determined by the formula

$$\sigma_{BON} = \pm \frac{M_{BON}}{W_e} 10^3 \qquad (2.4.4.2\text{-}4)$$

where M_{BON} = nominal alternating bending moment at the outlet of crankpin of oil bore, N·m;
$M_{BON} = \pm 0{,}5(M_{BO\max} - M_{BO\min})$;
M_{BO} = vector sum of alternating bending moments M_{BTO} and M_{BRO} due to tangential and radial force, respectively, N·m, $M_{BO} = (M_{BTO}\cos\psi + M_{BRO}\sin\psi)$;
ψ = angle between oil bore and horizontal measured in the sense of rotation of the crankshaft (refer to Fig. 2.4.4.2), deg;
W_e = section modulus related to cross-section of axially bored crankpin, mm^3;

$$W_e = \frac{\pi}{32}\left(\frac{D^4 - D_{BH}^4}{D}\right);$$

D and D_{BH} = refer to 2.4.6.

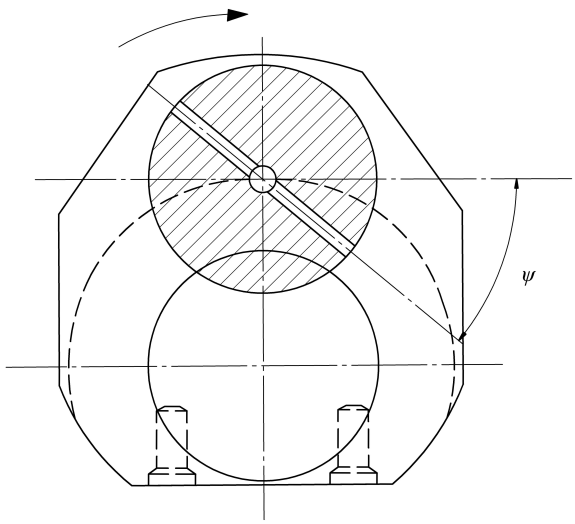

Fig. 2.4.4.2 Sectional view of the crankpin in way of oil bore

2.4.4.3 Calculation of alternating bending stresses in fillets.

The alternating bending stress in a crankpin fillet σ_{BH}, in MPa, shall be determined by the formula

$$\sigma_{BH} = \pm(\alpha_B \sigma_{BN}) \qquad (2.4.4.3\text{-}1)$$

where α_B = stress concentration factor for bending in crankpin fillet (for determination, refer to 2.4.6).

The alternating bending stress in a journal fillet σ_{BG}, in MPa, shall be determined by the formula

$$\sigma_{BG} = \pm(\beta_B \sigma_{BN} + \beta_Q \sigma_{QN}) \qquad (2.4.4.3\text{-}2)$$

where β_B = stress concentration factor for bending in journal fillet (for determination, refer to 2.4.6);
β_Q = stress concentration factor for shearing (for determination, refer to 2.4.6).

2.4.4.4 Calculation of alternating bending stresses in outlet of crankpin oil bore.

The alternating bending stress σ_{BO}, MPa, in outlet of crankpin oil bore shall be determined by the formula

$$\sigma_{BO} = \pm(\gamma_B \sigma_{BON}) \qquad (2.4.4.4)$$

where γ_T = bending stress concentration factor in outlet of crankpin oil bore (for determination of value — refer to 2.4.6).

2.4.5 Calculation of alternating torsional stresses.

2.4.5.1 Calculation of nominal alternating torsional stresses.

The calculation for nominal alternating torsional stresses shall be undertaken by the engine manufacturer according to the information below. The maximum values obtained from such calculations shall be submitted to the Register.

The maximum and minimum alternating torques shall be ascertained for each crankthrow and for the entire speed range by means of a harmonic synthesis of the forced vibrations from the 1st order up to and including the 16th order for 2-stroke cycle engines and from 0,5th order up to and including the 12th order for 4-stroke cycle engines. Whilst doing so, allowance shall be made for the dampings that exist in the system and for unfavourable conditions (misfiring in one of the cylinders). The speed ranges shall be selected in such a way that the transient response can be recorded with sufficient accuracy.

The nominal alternating torsional stress τ_N, in MPa, referred to crankpin or journal shall be determined by the formula

$$\tau_N = \pm \frac{M_T}{W_P} 10^3 \qquad (2.4.5.1)$$

where M_T = nominal alternating torque, N·m, to be determined by the formula

$M_T = \pm \frac{1}{2}(M_{T\max} - M_{T\min})$;

$M_{T\max}$, $M_{T\min}$ = extreme values of the torque with consideration of the mean torque, N·m;

W_p = polar moment of resistance related to cross-sectional area of bored crankpin or bored journal, in mm^3, and determined by the formulae:

$$W_P = \frac{\pi}{16}\left(\frac{D^4 - D_{BH}^4}{D}\right);$$

$$W_P = \frac{\pi}{16}\left(\frac{D_G^4 - D_{BG}^4}{D_G}\right);$$

D, D_{BH} and D_{BG}, refer to 2.4.6.

2.4.5.2 Calculation of alternating torsional stresses in fillets.

In the crankpin fillet, the alternating torsional stress, MPa, shall be determined by the formula

$$\tau_H = \pm(\alpha_T \tau_N) \qquad (2.4.5.2\text{-}1)$$

where α_T = stress concentration factor for torsion in crankpin fillet (for determination, refer to 2.4.6).

In the journal fillet, the alternating torsional stress, in MPa, shall be determined by the formula

$$\tau_G = \pm(\beta_T \tau_N) \qquad (2.4.5.2\text{-}2)$$

where β_T = stress concentration factor for torsion in journal fillet (for determination, refer to 2.4.6).

2.4.5.3 Calculation of alternating torsional stresses in outlet of crankpin oil bore.

The alternating torsional stress σ_{TO}, MPa, in outlet of crankpin oil bore shall be determined by the formula

$$\sigma_{TO} = \pm(\gamma_T \tau_N) \qquad (2.4.5.3)$$

where γ_T = torsional stress concentration factor in outlet of crankpin oil bore (for determination of value — refer to 2.4.6).

2.4.6 Calculation of stress concentration factors.

2.4.6.1 Where the stress concentration factor cannot be furnished by reliable measurements the values may be evaluated by means of the formulae according to 2.4.6.2, 2.4.6.3 and 2.4.6.4 applicable to the fillets and outlets of crankpin oil bores of solid-forged web-type crankshafts and to the crankpin fillets of semi-built crankshafts only.

All crank dimensions necessary for the calculation of stress concentration factors are shown in Fig. 2.4.6.1-1 and Fig. 2.4.6.1-2.

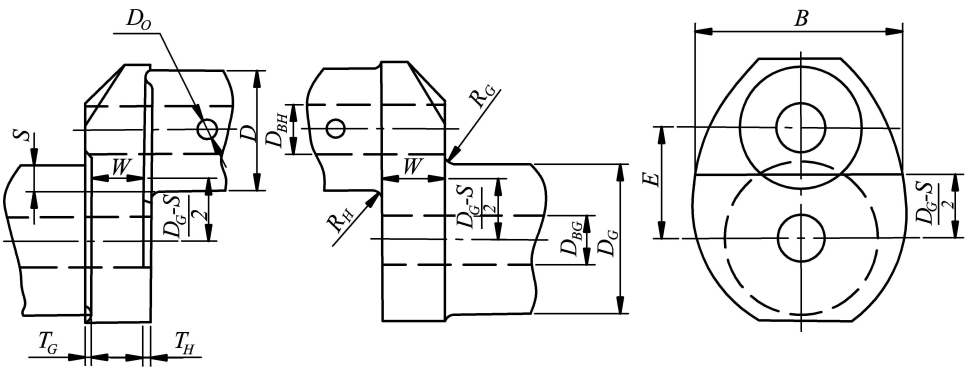

Fig. 2.4.6.1-1 Crank dimensions necessary for the calculation of stress concentration factors:
D=crankpin diameter, mm; D_{BH}=diameter of bore in crankpin, mm; R_H=fillet radius of crankpin, mm;
T_H =recess of crankpin, mm; D_G =journal diameter, mm; D_{BG} =diameter of bore in journal, mm;
D_O =diameter of oil bore in crankpin, mm;
R_G =fillet radius of journal, mm; T_G=recess of journal, mm; E=pin eccentricity, mm;
S=pin overlap,mm; $S=(D-D_G)/2-E$; W, B=web thickness and width, mm

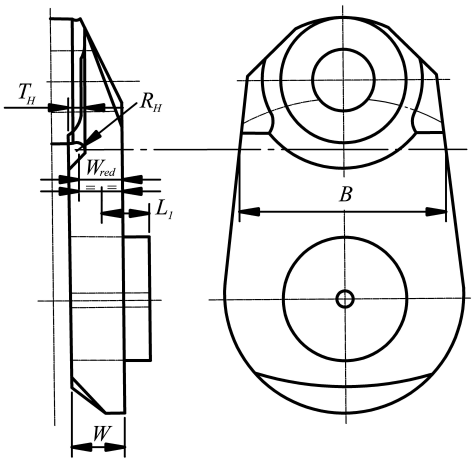

Fig. 2.4.6.1-2 Crank dimensions without web overlap necessary for calculation of stress concentration factors at $T_H>R_H$:
W_{red}= design thickness of web, mm; $W_{red}=W-T_H+R_H$

For the calculation of stress concentration factors in crankpin and journal fillets and for outlet of the crankpin oil bore, the following related dimensions will be applied:

$$s=S/D \text{ with } s\leqslant 0{,}5;$$

$$w=W/D \text{ with } 0{,}2\leqslant w\leqslant 0{,}8 \text{ и } T_H\leqslant R_H;$$

$$w=W_{red}/D \text{ with } 0{,}2\leqslant w\leqslant 0{,}8 \text{ и } T_H>R_H;$$

$$b=B/D \text{ with } 1{,}1\leqslant b\leqslant 2{,}2;$$

$$d_G=D_{BG}/D \text{ with } 0\leqslant d_G\leqslant 0{,}8;$$

$$d_H=D_{BH}/D \text{ with } 0\leqslant d_H\leqslant 0{,}8;$$

$$d_O = D_O/D \text{ with } 0 \leqslant d_O \leqslant 0{,}2;$$

$$t_H = T_H/D;\ t_G = T_G/D;$$

for crankpin fillets, $r = R_H/D$ with $0{,}03 \leqslant r \leqslant 0{,}13$;

for journal fillets, $r = R_G/D$ with $0{,}03 \leqslant r \leqslant 0{,}13$.

The factor f_t, which accounts for the influence of a recess in the fillets is not considered if the values of $f_t < 1$ (f_t=1).

The factors $f(s, w)$ and $f(r, s)$ at the relative overlap of pins $s < -0{,}5$ shall be evaluated replacing actual value of s by $-0{,}5$.

The alternative calculation procedure for the stress concentration factor with the use of the finite-element method shall be agreed upon with the Register (refer to Appendices III and IV to Section 2).

2.4.6.2 Crankpin fillet (refer to Appendix I to Section 2).

The stress concentration factor for bending (α_B) is

$$\alpha_B = 2{,}6914\, f(s, w) f(w)\, f(b)\, f(r)\, f(d_G)\, f\,(d_H)\, f_t \quad (2.4.6.2\text{-}1)$$

where $f(s, w) = -4{,}1883 + 29{,}2004w - 77{,}5925w^2 + 91{,}9454w^3 - 40{,}0416w^4 + (1-s)(9{,}5440 - 58{,}3480w + 159{,}3415w^2 - 192{,}5846w^3 + 85{,}2916w^4) + (1-s)^2 \times (-3{,}8399 + 25{,}0444w - 70{,}5571w^2 + 87{,}0328w^3 - 39{,}1832w^4)$;

$f(w) = 2{,}1790w^{0{,}7171}$;

$f(b) = 0{,}6840 - 0{,}0077b + 0{,}1473b^2$;

$f(r) = 0{,}2081r^{(-0{,}5231)}$;

$f(d_G) = 0{,}9993 + 0{,}27d_G - 1{,}0211d_G^2 + 0{,}5306d_G^3$;

$f(d_H) = 0{,}9978 + 0{,}3145d_H - 1{,}5241d_H^2 + 2{,}4147d_H^3$;

$f_t = 1 + (t_H + t_G)(1{,}8 + 3{,}2s)$.

The stress concentration factor for torsion (α_T) is

$$\alpha_T = 0{,}8f(r, s)\, f(b)\, f(w) \quad (2.4.6.2\text{-}2)$$

where $f(r,s) = r^{(-0{,}322 + 0{,}1015(1 - s))}$;

$f(b) = 7{,}8955 - 10{,}654b + 5{,}3482b^2 - 0{,}857b^3$;

$f(w) = w^{(-0{,}145)}$.

2.4.6.3 Journal fillet (refer to Appendix Section 2).

The stress concentration factor for bending (β_B) is

$$\beta_B = 2{,}7146f_B(s, w)\, f_B(w)\, f_B(b)\, f_B(r)\, f_B(d_G)\, f_B(d_H) f_t \quad (2.4.6.3\text{-}1)$$

where $f_B(s, w) = -1{,}7625 + 2{,}9821w - 1{,}5276w^2 + (1 - s)(5{,}1169 - 5{,}8089w + 3{,}1391w^2) + (1 - s)^2(-2{,}1567 + 2{,}3297w - 1{,}2952w^2)$;

$f_B(w) = 2{,}2422w^{0{,}7548}$;

$f_B(b) = 0{,}5616 + 0{,}1197b + 0{,}1176b^2$;

$f_B(r) = 0{,}1908r^{(-0{,}5568)}$;

$f_B(d_G) = 1{,}0012 - 0{,}6441d_G + 1{,}2265d_G^2$;

$f_B(d_H) = 1{,}0012 - 0{,}1903d_H + 0{,}0073d_H^2$;

$f_t = 1 + (t_H + t_G)(1{,}8 + 3{,}2s)$.

The stress concentration factor for shearing (β_Q) is

$$\beta_Q = 3{,}0128f_Q(s)\, f_Q(w)\, f_Q(b)\, f_Q(r)\, f_Q(d_H) f_t \quad (2.4.6.3\text{-}2)$$

where $f_Q(s) = 0{,}4368 + 2{,}1630(1 - s) - 1{,}5212(1 - s)^2$;

$f_Q(w) = w/(0{,}0637 + 0{,}9369w)$;

$f_Q(b) = -0{,}5 + b$;

$f_Q(r) = 0{,}5331r^{(-0{,}2038)}$;

$f_Q(d_H) = 0{,}9937 - 1{,}1949d_H + 1{,}7373d_H^2$;

$f_t = 1 + (t_H + t_G)(1{,}8 + 3{,}2s)$.

The stress concentration factor for torsion (β_T) is

$$\beta_T = \alpha_T \quad (2.4.6.3\text{-}3)$$

if the diameters and fillet radii or crankpin and journal are the same, and

$$\beta_T = 0{,}8 f(r,\ s)\ f(b)\ f(w) \qquad (2.4.6.3\text{-}4)$$

if crankpin and journal diameters and/or radii are of different sizes

where $f(r,\ s)$; $f(b)$; $f(w)$ shall be determined by Formula (2.4.6.2-2);
in this case, r is the ratio of the journal fillet radius to the journal diameter $r = R_G/D_G$.

2.4.6.4 Outlet of oil bore (refer to Appendix II to Section 2).

The stress concentration factor for bending γ_B shall be determined by the formula:

$$\gamma_B = 3 - 5{,}88 d_O + 34{,}6 d_O^2. \qquad (2.4.6.4\text{-}1)$$

The stress concentration factor for torsion γ_T shall be determined by the formula:

$$\gamma_T = 4 - 6 d_O + 30 d_O^2. \qquad (2.4.6.4\text{-}2)$$

2.4.7 Additional bending stresses.

In addition to the alternating bending stresses in fillets (refer to 2.4.4.3) further bending stresses due to misalignment and bedplate deformation as well as due to axial and bending vibrations shall be considered by applying σ_{add} as given in Table 2.4.7.

Table 2.4.7

Values of coefficient k'

Type of engine	σ_{add}, MPa
Crosshead	± 30
Trunk piston	± 10

For crosshead type engines the additional stress (30 MPa) includes stress due to axial vibrations (20 MPa) and stress due to misalignment and bedplate deformation (10 MPa).

It is recommended that a value of 20 MPa be used where axial vibration calculation results of the complete dynamic system engine/shafting/gearing/propeller) are not available. Where axial vibration calculation results of the complete dynamic system are available, the calculated figures may be used instead.

2.4.8 Calculation of equivalent alternating stresses.

For the crankpin fillet, the equivalent alternating stress σ_{VH}, in MPa, shall be determined by the formula

$$\sigma_{VH} = \pm\sqrt{(\sigma_{BH} + \sigma_{add})^2 + 3\tau_H^2}\ . \qquad (2.4.8\text{-}1)$$

For the journal fillet, the equivalent alternating stress σ_{VG}, in MPa, shall be determined by the formula

$$\sigma_{VG} = \pm\sqrt{(\sigma_{BG} + \sigma_{add})^2 + 3\tau_G^2}\ . \qquad (2.4.8\text{-}2)$$

For the outlet of crankpin oil bore, the equivalent alternating stress σ_{VO} in MPa shall be determined by the formula

$$\sigma_{VO} = +\frac{1}{3}\sigma_{BO}\left[1 + 2\sqrt{1 + 2{,}25(\sigma_{TO}/\sigma_{BO})^2}\right]. \qquad (2.4.8\text{-}3)$$

For other parameters, refer to 2.4.4.3, 2.4.5.2 and 2.4.7. Also refer to Appendices I and II to Section 2.

2.4.9 Calculation of fatigue strength.

Where the fatigue strength for a crankshaft cannot be furnished by reliable measurements, the fatigue strength σ_{DWH}, σ_{DWG} and σ_{DWO} in MPa, may be evaluated by means of the following formulae:

related to the crankpin diameter:

$$\sigma_{DWH} = K(0{,}42 R_m + 39{,}3)(0{,}264 + 1{,}073 D^{-0{,}2} + \frac{785 - R_m}{4900} + \frac{196}{R_m}\sqrt{\frac{1}{R_H}}\ ), \qquad (2.4.9\text{-}1)$$

related to the journal diameter:

$$\sigma_{DWG} = K(0{,}42R_m + 39{,}3)(0{,}264 + 1{,}073D^{-0{,}2} + \frac{785 - R_m}{4900} + \frac{196}{R_m}\sqrt{\frac{1}{R_G}}) , \quad (2.4.9\text{-}2)$$

related to the crankpin in outlet of crankpin oil bore:

$$\sigma_{DWO} = K(0{,}42R_m + 39{,}3)(0{,}264 + 1{,}073D^{-0{,}2} + \frac{785 - R_m}{4900} + \frac{196}{R_m}\sqrt{\frac{2}{D_O}}) , \quad (2.4.9\text{-}3)$$

where K = factor for different types of forged and cast crankshafts without surface treatment equal to:
1,05 for continuous grain flow forged or drop-forged crankshafts, applied only to fatigue strength in a fillet;
1,0 for free form forged crankshafts;
0,93 for cast steel crankshafts;
for crankshafts subject for surface treatment K=1,3;
σ_B = minimum tensile strength of crankshaft material, MPa.

For other parameters refer to 2.4.6.1. However, it shall be considered that for calculation purposes R_H, R_G and $D_O/2$ shall not be taken less than 2 mm.

Where the results of the fatigue tests conducted on full size crankthrows or crankshafts, which have been subjected to surface treatment are available, the K factors shall be used based on the tests (refer to Appendices IV and V to Section 2).

The experimental values of fatigue strength testing obtained during the fatigue tests shall be agreed upon with the Register. The survival probability for fatigue strength values derived from testing shall not be less than 80 % of the average value.

2.4.10 Calculation of shrink-fits of semi-built crankshafts.

2.4.10.1 All crank dimensions necessary for the calculation of the shrink-fit are shown in Fig. 2.4.10.1.

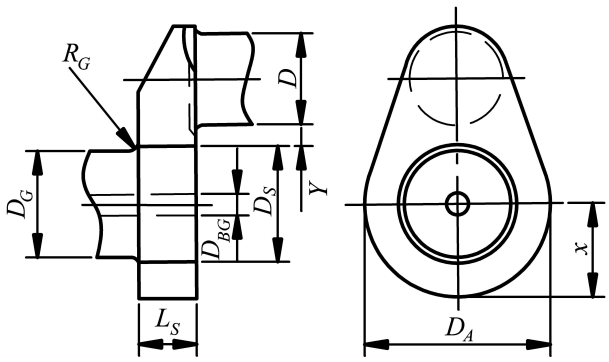

Fig. 2.4.10.1 Crank throw of semi-built crankshaft:
D_S = shrink diameter, mm; L_S = length of shrink-fit, mm; D_A = outside diameter of web or twice the minimum distance x between centre-lines of journals and outer contours of web, whichever is less (mm);
y = distance between the adjacent generating lines of journal and pin (mm) $y \geqslant 0{,}05D_S$:
Where y is less than $0{,}1D_S$, special consideration shall be given to the effect of stress due to the shrink on the fatigue strength at the crankpin fillet (For other parameters, refer to 2.4.6.1)

The radius of the transition from the journal to the shrink diameter shall not be less than the greater of the two values:

$$R_G \geqslant 0{,}015D_G \text{ and } R_G \geqslant 0{,}5(D_s - D_G).$$

The actual oversize Z of the shrink-fit shall be within the limits $Z_{\min}$ and $Z_{\max}$ calculated in accordance with 2.4.10.2 to 2.4.10.4.

The necessary minimum oversize is determined by the greater value calculated in accordance with 2.4.10.2 and 2.4.10.3.

2.4.10.2 The calculation of the minimum oversize $Z_{\min}$ shall be carried out for the crankthrow with the maximum torque $M_{T\max}$ (refer to 2.4.5.2) using the formula

$$Z_{\min} \geqslant \frac{4 \cdot 10^3 \; S_R M_{T\max}}{\pi \mu E_m D_S L_S} \; \frac{1 - Q_A^2 Q_S^2}{(1 - Q_A^2)(1 - Q_S^2)} \qquad (2.4.10.2)$$

where $Z_{\min}$ = minimum oversize, mm;
S_R = safety factor against slipping to be taken not less than 2;
μ = coefficient for static friction equal to 0,20 where $L_S/D_S \geqslant 0{,}40$;
E_m = Young's modulus, MPa;
$Q_A = D_S/D_A$, $Q_S = D_{BG}/D_S$,

where $D_{BG} \leqslant D_S \sqrt{\dfrac{1 - 4000 S_R M_{T\max}}{\mu \pi D_S^2 L_S R_{eH}}}$.

2.4.10.3 In addition to 2.4.10.2 the minimum oversize $Z_{\min}$, in mm, shall also be calculated according to the following formula:

$$Z_{\min} \geqslant \sigma_S D_S / E_m \qquad (2.4.10.3)$$

where σ_S = minimum yield stress of material for crank web, MPa.

2.4.10.4 The maximum permissible oversize $Z_{\max}$, in mm, is calculated in accordance with the following formula:

$$Z_{\max} \leqslant \frac{\sigma_S D_S}{E_m} + \frac{0{,}8 D_S}{1000} . \qquad (2.4.10.4)$$

2.4.11 Acceptability factor.

Adequate dimensioning of a crankshaft is ensured if the acceptability factors (the ratio of the fatigue strength to the equivalent alternating stress) for both the crankpin and journal fillets as well as for outlet of crankpin oil bore satisfy the criteria:

$$Q_H = \sigma_{DWH}/\sigma_{VH} \geqslant 1{,}15,$$

$$Q_G = \sigma_{DWG}/\sigma_{VG} \geqslant 1{,}15,$$

$$Q_O = \sigma_{DWO}/\sigma_{VO} \geqslant 1{,}15.$$

2.4.12 At the junction of the web with the journal or pin, the radius of the fillet shall not be less than 0,05D.

Where crankshafts have flanges, the radius of the fillet at the junction of the flange with the journal shall not be less than 0,08D.

2.4.13 The edges of the oil holes shall be rounded to a radius of not less than 0,25 of the diameter of the hole with a smooth finish.

2.4.14 In built and semi-built crankshafts, no keys or pins are permitted for joining a crankpin or journal to the web. On the outer sides of junction of webs to pins or journals, reference marks shall be provided.

2.4.15 Where the thrust bearing is built in the engine frame, the diameter of the thrust shaft in way of the bearing shall not be less either than that of the crankshaft journal or the shaft diameter determined in accordance with 5.2.2, Part VII "Machinery Installations".

2.5 SCAVENGING AND SUPERCHARGING

2.5.1 The operation and manoeuvrability of main engine shall be guaranteed in the case of failure of one or all turbochargers under running conditions permitted by the engine manufacturer (refer to 2.1.7, Part VII "Machinery Installations").

2.5.2 For main engines, which turbochargers do not provide a sufficient air supply when started and within low-load range, provision shall be made for an auxiliary supercharging system generally comprising two air blowers, which would make it possible for the engine to reach running conditions, under which the necessary degree of supercharging would be ensured. If one of the blowers of the auxiliary supercharging system fails, the other one that remains intact shall ensure the operation of the system.

2.5.3 Where supercharging air is cooled, the scavenge manifolds shall be fitted with thermometers and condensate drain arrangements after each air cooler.

2.5.4 Scavenge manifolds shall be provided with relief valves set for a pressure exceeding that of scavenging air by not more than 50 %.

The free area of the relief valves shall not be less than 30 cm^2 per cubic metre of the manifold volume including the volume of the underpiston spaces in crosshead engines fitted with diaphragms if these spaces are not used as scavenging pumps.

2.5.5 Scavenge manifolds and underpiston spaces shall be provided with draining arrangements for removing accumulations of sludge and water.

2.5.6 The air intake pipes of engines and scavenging-and-supercharging units shall be fitted with safety gauzes.

2.5.7 The requirements of the para are applicable to the turbochargers of internal combustion engines. The requirements for type testing and survey of the turbochargers are specified in Appendix 9 "Procedure for Survey, Testing, Approval of Turbochargers and their Matching on ICE", Section 5 "Machinery", Part IV "Technical Supervision during Manufacture of Products" of the Rules for Technical Supervision during Construction of Ships and Manufacture of Materials and Products for Ships.

2.5.7.1 Turbochargers shall be type approved, either separately or as a part of an engine. The requirements of 2.5.6 are written for exhaust gas driven turbochargers, but apply in principle also for engine driven chargers.

2.5.7.2 Turbochargers shall be designed to operate under service conditions given in 2.3, Part VII "Machinery Installations" and 2.2.7, Part IX "Machinery". The component lifetime and the alarm level for speed shall be based on 45 °C air inlet temperature.

2.5.7.3 The air inlet of turbochargers shall be fitted with a filter.

2.5.7.4 The requirements escalate with the size of the turbochargers. The parameter for size is the engine power (at MCR) supplied by a group of cylinders served by the actual turbocharger, (e.g. for a V-engine with one turbocharger for each bank the size is half of the total engine power).

2.5.7.5 Turbochargers are categorised in three groups depending on served power by cylinder groups with:

Category A: ≤ 1000 kW ;

Category B: > 1000 kW and ≤ 2500 kW;

Category C: > 2500 kW.

2.5.7.6 Documentation to be submitted:

.1 Category A:

On the Register request:

containment test report;

cross sectional drawing with principal dimensions and names of components;

test program.

.2 Category B and C:

cross sectional drawing with principal dimensions and materials of housing components for containment evaluation;

documentation of containment in the event of disc fracture (refer to 3.2);
operational data and limitations as:
maximum permissible operating speed (rpm);
alarm level for over-speed;
maximum permissible exhaust gas temperature before turbine;
alarm level for exhaust gas temperature before turbine;
minimum lubrication oil inlet pressure;
lubrication oil inlet pressure low alarm set point;
maximum lubrication oil outlet temperature;
Lubrication oil outlet temperature high alarm set point;
Maximum permissible vibration levels, i.e. self- and externally generated vibration (Alarm levels may be equal to permissible limits but shall not be reached when operating the engine at 110% power or at any approved intermittent overload beyond the 110 %.);
arrangement of lubrication system, all variants within a range;
type test reports ;
test program .

.3 Category C:

drawings of the housing and rotating parts including details of blade fixing;
material specifications (chemical composition and mechanical properties) of all parts mentioned above;
welding details and welding procedure of above mentioned parts, if applicable;
documentation of safe torque transmission when the disc is connected to the shaft by an interference fit (refer to 3.3)[1];
information on expected lifespan, considering creep, low cycle fatigue and high cycle fatigue;
Operation and maintenance manuals[1].

2.5.7.7 Applicable to Category C in cases where the disc is connected to the shaft with interference fit, calculations shall substantiate safe torque transmission during all relevant operating conditions such as maximum speed, maximum torque and maximum temperature gradient combined with minimum shrinkage amount.

2.5.7.8 Turbochargers shall meet the following criteria of strength (taking into account the requirements of 5.3.2):

.1 turbochargers shall fulfil containment in the event of a rotor burst. This means that at a rotor burst no part may penetrate the casing of the turbocharger or escape through the air intake. For documentation purposes (test/calculation), it shall be assumed that the discs disintegrate in the worst possible way;

.2 for category B and C, containment shall be documented by testing. Fulfilment of this requirement can be awarded to a generic range of turbochargers based on testing of one specific unit. Testing of a large unit is preferred as this is considered conservative for all smaller units in the generic range. In any case, it must be documented (e.g. by calculation) that the selected test unit really is representative for the whole generic range.

2.5.7.9 In addition to the requirements of 2.12.1 for all turbochargers of Categories B and C, indications and alarms as listed in Table 2.5.7.9 are required. Indications may be provided at either local or remote locations.

[1]Applicable to two sizes in a generic range of turbochargers.

Table 2.5.7.9

№	Monitored parameters	Category of Turbochargers				Notes
		B		C		
		Alarm	Indication	Alarm	Indication	
1	Speed	High[1]	×[1]	High[1]	×[1]	
2	Exhaust gas at each turbocharger inlet, temperature	High[2]	×[2]	High	×	High temp. alarms for each cylinder at engine is acceptable[3]
3	Lub. oil at turbocharger outlet, temperature		×	High	×	If not forced system, oil temperature near bearings
4	Lub. oil at turbocharger inlet, pressure	Low		Low	×	Only for forced lubrication systems[4]

[1]On turbocharging systems where turbochargers are activated sequentially, speed monitoring is not required for the turbocharger(s) being activated last in the sequence, provided all turbochargers share the same intake air filter and they are not fitted with waste gates.

[2]For Category B turbochargers, the exhaust gas temperature may be alternatively monitored at the turbocharger outlet, provided that the alarm level is set to a safe level for the turbine and that correlation between inlet and outlet temperatures is substantiated.

[3]Alarm and indication of the exhaust gas temperature at turbocharger inlet may be waived if alarm and indication for individual exhaust gas temperature is provided for each cylinder and the alarm level is set to a value safe for the turbocharger.

[4]Separate sensors are to be provided if the lubrication oil system of the turbocharger is not integrated with the lubrication oil system of the diesel engine or if it is separated by a throttle or pressure reduction valve from the diesel engine lubrication oil.

2.6 FUEL SYSTEM

2.6.1 The fuel injection pumps or their prime movers shall ensure quick shutting off the fuel supply to any cylinder of the engine. Exemption from this requirement is allowed for engines with cylinders not over 180 mm in bore having grouped fuel pumps.

2.6.2 The high-pressure fuel oil injection pipes shall be made from thick-walled seamless steel pipes without welded or soldered intermediate joints (refer to item 1.21 of Table 1.2.4).

2.6.3 External high-pressure fuel delivery lines between the high-pressure fuel pumps and fuel injectors shall be protected with a jacketed piping system capable of containing fuel from a high-pressure line failure. A jacketed pipe incorporates an outer pipe, into which the high-pressure fuel pipe is placed, forming a permanent assembly. The jacketed piping system shall include a means for collection of leakages and arrangements and shall be provided with an alarm in case of a fuel line failure.

When in return piping the propulsion of pressure with peak to peak values exceeds 1,6 MPa, shielding of this piping is also required.

2.6.4 The fuel injection pumps and fuel delivery piping shall be so designed that they can withstand the pressure fluctuation or special means shall be provided to reduce it even to the point of disappearance.

2.6.5 For the main engine provision shall be made for an arrangement to limit the fuel supply by the rated power mode.

2.7 LUBRICATION

2.7.1 The lubricators supplying oil for lubricating the cylinders shall be fitted with an arrangement enabling to control the amount of oil delivered to each point. To supervise the oil supply to all points to be lubricated, flow indicators shall be provided in position convenient for observation.

2.7.2 Every union supplying lubricating oil to the two-stroke engine cylinders, as well as the unions arranged in the upper part of the cylinder liner shall be provided with a non-return valve.

2.7.3 The turbochargers and governors with ball or roller bearings shall have independent lubricating oil systems. If other constructions are used, a technical justification confirming the reliability excellence must be submitted to the Register for review.

2.7.4 Provision shall be made to prevent penetration of water and fuel oil into the circulating oil and the entry of oil into the cooling water.

2.8 COOLING

2.8.1 Where telescopic devices are employed for cooling pistons or for supplying lubricating oil to moving parts, protection from hydraulic shocks shall be provided.

2.9 STARTING ARRANGEMENTS

2.9.1 The manifold supplying starting air from the master starting air valve to the cylinder starting valves shall be fitted with one or more relief valves and with a device relieving the manifold of pressure after the engine has been started.

The relief valve shall be loaded to a pressure not more than 1,2 times that in the starting air manifold. The relieving device and the relief valve may be fitted directly on the master starting air valve.

Alternative device designed to protect the starting air manifold from the effects of inner explosions is also admitted (refer to 16.3.3, Part VIII "Systems and Piping").

2.9.2 Flame arresters or bursting discs shall be fitted on each branch pipe for air supply to the starting valves of the reversing engine cylinder covers.

In case of non-reversing engines at least one flame arrester or bursting disc shall be fitted on the manifold supplying starting air from the main starting air valve to the manifold.

Flame arresters or bursting discs may be omitted for the engines having a bore not exceeding 230 mm.

2.9.3 The starting arrangements of electrically-started engines shall meet the requirements of 13.7, Part XI "Electrical Equipment". Furthermore, it is recommended to equip electrically-started engines with engine-driven generators for automatic charging of the starting storage batteries.

2.9.4 In emergency diesel generators, the starting system and drive motor characteristics shall comply with the requirements of 16.1.8, Part VIII "Systems and Piping", and 9.3.4.2, 9.5 and 19.1.2.4, Part XI "Electrical Equipment".

Emergency diesel generators shall be capable of being readily started in their cold condition at the ambient temperature of 0 °C. Where such starting is impractical or at lower temperatures at the space, provision shall be made for heating devices to ensure safe starting and taking up the load by the diesel generators.

If necessary, provision shall be made for heating devices to ensure safe starting and taking up the load according to the requirements stated above.

Spaces for emergency diesel generators shall comply with the requirements of 9.2.6, Part XI "Electrical Equipment".

2.10 EXHAUST ARRANGEMENTS

2.10.1 In two-stroke engines fitted with the exhaust gas turboblowers, which operate on the impulse systems, provision shall be made to prevent broken piston rings and valves from entering the turbine casing.

2.11 CONTROL, PROTECTION AND REGULATION

2.11.1 The starting and reversing arrangements shall eliminate the possibility of:

.1 running the engine in the direction opposite to the required one;

.2 reversing the engine when the fuel supply is cut in;

.3 starting the engine before reversal is completed;

.4 starting the engine with the power-driven turning gear engaged.

2.11.2 Each main engine shall have a speed gover-nor so adjusted that the engine speed cannot exceed the rated (nominal) speed by more than 15 %.

In addition to the governor, each main engine of power output 220 kW and upwards, which may be disengaged from the shafting or which is driving a con-trollable-pitch propeller, shall be provided with a sepa-rate overspeed device so adjusted that the engine speed cannot exceed the rated speed by more than 20 %.

The overspeed device shall be activated after the speed governor.

2.11.3 Each prime mover for driving a generator shall be fitted with a speed governor, which shall meet the following requirements:

.1 when the maximum electrical load step of a generator is thrown off or on (refer to Fig. 2.11.3.2), the transient speed variations in the electrical network shall not exceed 10 % of the rated speed. Refer also to 2.1.3.1, Part XI "Electrical Equipment;

.2 when a prime mover running at no-load is suddenly loaded to 50 % of the rated power of the generator followed by the remaining 50 % after the interval sufficient to restore the speed to steady state, the transient speed variations shall not exceed 10 % of the rated speed. Application of electrical load in more than two load steps can only be permitted, if the conditions within the ship's mains permit the use of such prime movers, which can only be loaded in more than two load steps (Fig. 2.11.3.2) and provided that this is already allowed for in the designing stage. This shall be verified in the form of system specifications to be approved and to be demonstrated at ship's trials. In this case the power required for the electrical equipment to be automatically switched on after black-out as well as the sequence in which it is connected shall fit the load steps. This applies analogously also to generators to be operated in parallel and where the power has to be transferred from one generator to another in the event of any one generator has to be switched off;

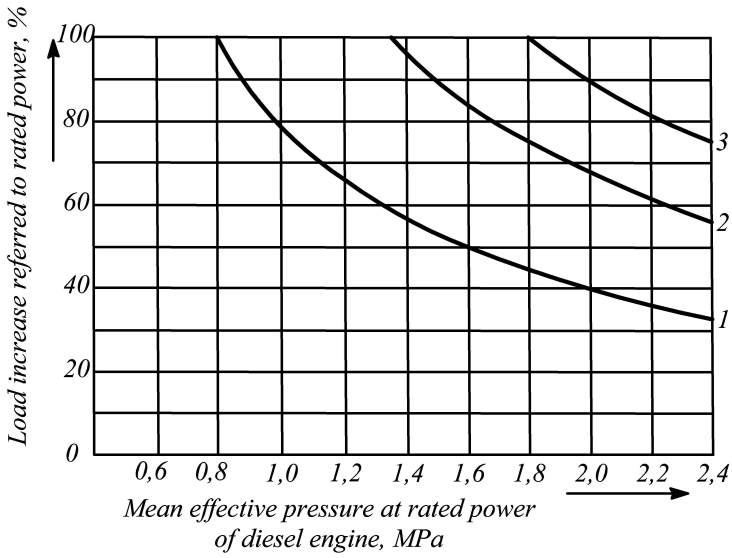

Fig. 2.11.3.2
Limiting curves for loading 4-stroke diesel engines step by step from no load to rated power as function of the brake mean effective pressure:
1 — 1st load step, *2* — 2nd load step, *3* — 3rd load step

.3 where a.c. generators operate in parallel within 20 — 100 % of the total load, the load distribution between the generators shall be in proportion to their power and shall not differ by more than 15 % from the design load for the greater generator or by more than 25 % from the design load for the generator considered, whichever is less;

.4 at all loads between no-load and rated power the permanent speed variation shall not exceed the rated speed by more than 5 % of the rated speed;

.5 when the generator rated power is thrown off or on, as specified in 2.11.3.1 and 2.11.3.2, steady state conditions shall be achieved in not more than 5 seconds;

.6 steady state conditions are those, at which the envelope of speed variation does not exceed ± 1 % of the declared speed at the new power;

.7 for main engines driving shaft-generators, the values of load-relief and load-on stated in 2.11.3.1, 2.11.3.2, 2.11.3.4, 2.11.3.5 shall comply with the load of the engines. Speed governor of the driving engine shall have the parameters to meet the requirements of 2.11.3;

.8 when 100 % of the generator rated power is thrown off, a transient speed variation in excess of 10 per cent of the rated speed may be acceptable, provided this does not cause the intervention of the overspeed device as required by 2.11.2.

2.11.4 The characteristics of the speed governor for the emergency generator driving engine shall meet the requirements of 2.11.3 (except for 2.11.3.2) when a 100 % load is taken off and put on. At stepwise loading the full (100 %) load shall be provided in 45 s after power loss on the main switchboard busbars.

The time delay and successive stepwise loading shall be demonstrated during sea trials of the ship.

2.11.5 Provision shall be made for local and remote control of speed variation within $-20 \div +10$ % of the nominal value.

Remote control of speed variation for generators to be operated in parallel shall be arranged so to provide with possibility of controlling them by one operator.

2.11.6 In addition to the speed governor each driving engine stated in 2.11.3 having a power 220 kW and above shall be fitted with a separate overspeed protective device so adjusted that the speed cannot exceed the rated speed by more than 15 %.

2.11.7 The overspeed protective device stated in 2.11.2 and 2.11.6 including its driving mechanism and emergency stop effector shall be independent of the speed governor.

2.11.8 In addition to the requirements of the Chapter, electric (electronic) speed governors shall also comply with 2.1, Part XV "Automation".

If the electric (electronic) speed governors comprise a part of the remote automatic control system they shall meet the requirements of 3.1.8 and 3.1.10, Part VII "Machinery Installations" and also of 2.3, Part XV "Automation".

The electric (electronic) speed governors shall be of an approved type and tested in accordance with 12.3.1, Part IV "Technical Supervision During Manufacture of Products" of Rules for Technical Supervision During Construction of Ships and Manufacture of Materials and Products for Ships.

2.11.9 Protection system of main and auxiliary engines (refer to 1.1.1.5), apart from the overspeed protective device, shall provide complete cut-off the fuel when the pressure of lubricating oil in the system drops below the allowable value.

2.12 INSTRUMENTS AND ALARM DEVICES

2.12.1 Main and auxiliary engines shall be equipped with instruments for measuring:

.1 lubricating oil pressure at engine inlet and in way of camshaft (where lubricating oil system is independent);

.2 freshwater pressure (or flow) in the engine cooling system;

.3 starting air pressure at main starting valve or starting device inlet;

.4 fuel pressure at fuel injection pumps inlets (where an oil-fuel priming pump is installed);

.5 exhaust gas temperature at each cylinder (for engines with a cylinder bore of 180 mm and less, exhaust piping temperature);

.6 lubricating oil temperature at engine inlet;

.7 pressure (or flow) in the fuel injector cooling system (where the system is independent);

.8 fuel temperature at fuel injection pump inlets (where the fuel requires heating);

.9 pressure (or flow) in the independent piston cooling system;

.10 oil pressure in way of main bearings where lubricating oil is supplied independently and in way of thrust bearing (for thrust bearings built in the engine);

.11 lubricating oil pressure at crosshead bearings (where lubricating oil is supplied independently);

.12 lubricating oil temperature in way of camshaft (where lubricating oil is supplied independently);

.13 lubricating oil pressure at turbocharger inlet where circulating oil of the engine is used;

.14 lubricating oil temperature and flow at the outlet of each turbocharger bearing (where gravity lubrication systems are applied);

.15 cooling liquid temperature and flow at each piston outlet (for engines with controlled piston cooling);

.16 fuel injector cooling medium temperature at outlet (where an independent system is used);

.17 freshwater temperature at each cylinder outlet or at engine outlet (where the engine has one cooling space);

.18 freshwater temperature at engine inlet;

.19 freshwater temperature at turbocharger outlet;

.20 supercharging receiver pressure;

.21 supercharging air temperature behind air coolers;

.22 exhaust gas temperature in front of turbochargers and behind them.

N o t e . Proceeding from the structural features of the internal combustion engines, changes may be introduced to the list of measuring instruments provided the technical substantiation is submitted to the Register.

2.12.2 Each driving above 37 kW shall be fitted with an alarm device with audible and visual signals for the failure of lubricating oil system as well as an alarm to indicate leaks from the high-pressure oil fuel injection pipes of diesel engines (refer to 2.6.3).

The following warning alarms are recommended:

.1 pressure drop in freshwater cooling system or water temperature rise at engine outlet;

.2 drop of lubricating oil level in the gravity tank of turbochargers;

.3 rise of temperature of thrust bearing built in the engine.

2.12.3 The local control stations of main engines shall be equipped with instruments in accordance with 2.12.1.1 to 2.12.1.3, 2.12.1.7, 2.12.1.9 (where media other than circulation oil are used), 4.2.5.3 and with an instrument for measuring crankshaft speed, and where disengaging couplings are fitted, with an instrument for measuring propeller shaft speed as well.

The local control stations of main reversible engines and engines with reverse-reduction gear shall be provided with indicators of the direction of propeller shaft rotation.

2.12.4 Local control stations of auxiliary engines (refer to 1.1.1.5) shall be equipped with instruments in compliance with 2.12.1.1 to 2.12.1.3 and with an instrument for measuring the crankshaft speed.

2.13 TORSIONAL VIBRATION DAMPER. ANTIVIBRATOR

2.13.1 The damper design shall make air removal possible when filling the damper with oil or silicone liquid, and the silicone damper design shall also enable a sampling of the liquid.

2.13.2 Lubrication of a spring damper shall, as a rule, be effected from the lubricating oil circulation system of the engine.

2.13.3 The design of the damper fitted at the free end of the crankshaft shall make it possible to connect devices for measuring torsional vibration to the crankshaft.

2.13.4 The damper shall be used with regard to the requirements of 8.8.3 to 8.8.5, Part VII "Machinery Installations".

APPENDIX I

DEFINITION OF STRESS CONCENTRATION FACTORS IN CRANKSHAFT FILLETS (REFER TO IACS M53)

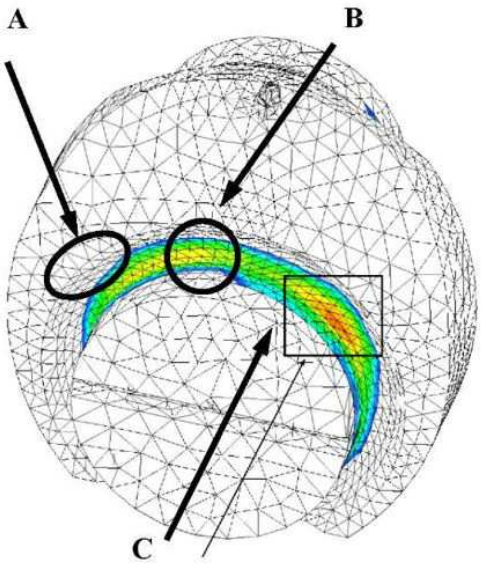

	Stress	Max $\|\|\sigma_3\|\|$	Max σ_1	
Torsional loading	Location of maximal stresses	A	C	B
	Typical principal stress system Mohr's circle diagram with $\sigma_2 = 0$	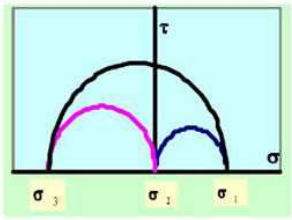 $\|\|\sigma_3\|\| > \sigma_1$	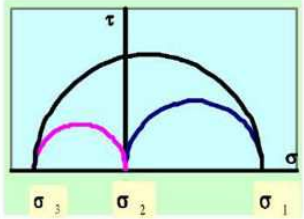 $\sigma_1 > \|\|\sigma_3\|\|$	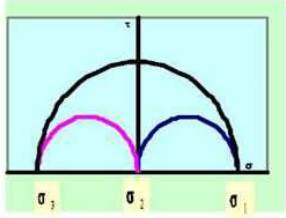 $\sigma_1 \approx \|\|\sigma_3\|\|$
	Equivalent stress and SCF	$\tau_{equiv} = \frac{\sigma_1 - \sigma_3}{2}$ **SCF** $= \frac{\tau_{equiv}}{\tau_n}$ for α_T, β_T		
Bending loading	Location of maximal stresses	B	B	B
	Typical principal stress system Mohr's circle diagram with $\sigma_3 = 0$	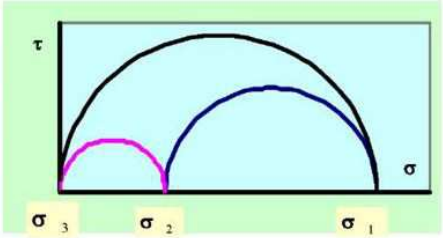 $\sigma_2 \neq 0$		
	Equivalent stress and SCF	$\sigma_{equiv} = \sqrt{\sigma_1^2 + \sigma_2^2 - \sigma_1 . \sigma_2}$ **SCF** $= \frac{\sigma_{equiv}}{\sigma_n}$ for $\alpha_B, \beta_B, \beta_Q$		

APPENDIX II

STRESS CONCENTRATION FACTORS AND STRESS DISTRIBUTION AT THE EDGE OF OIL DRILLINGS (REFER TO IACS M53)

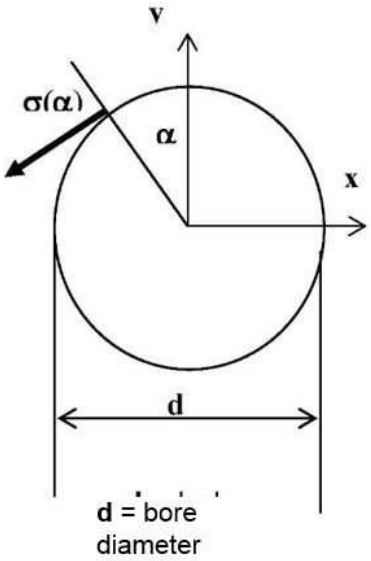

Stress type	Nom. stress tensor	Uniaxial stress distribution around outlet	Mohr's circle diagram
Tension	$\begin{bmatrix} \sigma n & 0 \\ 0 & 0 \end{bmatrix}$	$\sigma_\alpha = \sigma_n \gamma_B / 3\,[1+2\cos(2\alpha)]$ 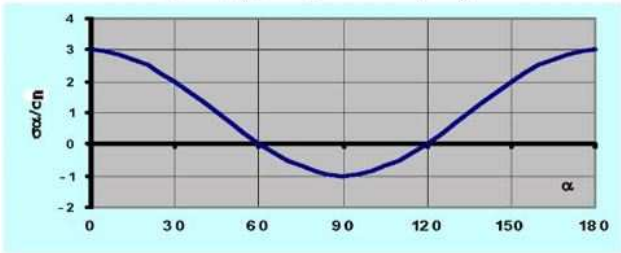	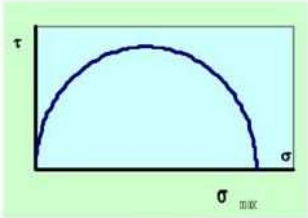 $\gamma_B = \sigma_{max}/\sigma_n$ for for $k\pi$
Shear	$\begin{bmatrix} 0 & \tau n \\ \tau n & 0 \end{bmatrix}$	$\sigma_\alpha = \gamma_T\, \tau_n \sin(2\alpha)$ 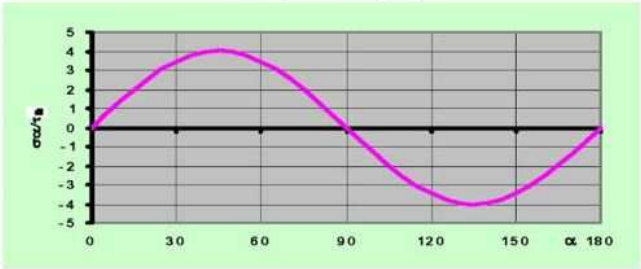	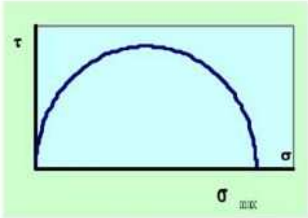 $\gamma_T = \sigma_{max}/\tau_n$ for $\alpha = \frac{\pi}{4} + k\frac{\pi}{2}$
Tension + shear	$\begin{bmatrix} \sigma n & \tau n \\ \tau n & 0 \end{bmatrix}$	$\sigma_\alpha = \frac{\gamma_B}{3}\sigma_n\left\{1+2\left[\cos(2\alpha)+\frac{3}{2}\frac{\gamma_T}{\gamma_B}\frac{\tau_n}{\sigma_n}\sin(2\alpha)\right]\right\}$ 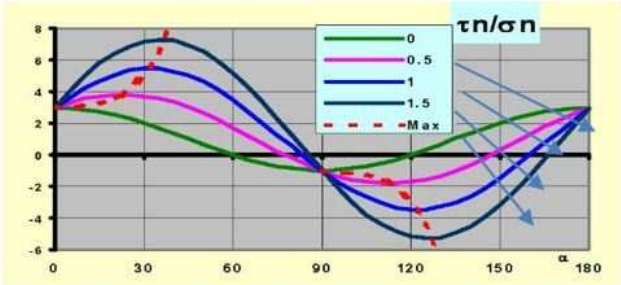	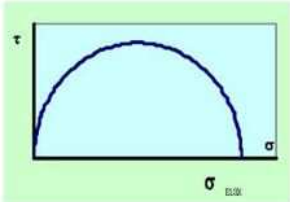 $\sigma_{max} = \frac{\gamma_B}{3}\sigma_n\left[1+2\sqrt{1+\frac{9}{4}\left(\frac{\gamma_T}{\gamma_B}\frac{\tau_n}{\sigma_n}\right)^2}\right]$ for $\alpha = \frac{1}{2}\mathrm{tg}^{-1}\left(\frac{3\gamma_T\tau_n}{2\gamma_B\sigma_n}\right)$

APPENDIX III

GUIDANCE FOR CALCULATION OF STRESS CONCENTRATION FACTORS IN THE WEB FILLET RADII OF CRANKCHAFTS BY USING FINITE ELEMENT METHOD (REFER TO IACS M53)

Contents

1. General
2. Model requirements
2.1 Element mesh recommendations
2.2 Material
2.3 Element mesh quality criteria
2.3.1 Principal stresses criterion
2.3.2 Averaged/unaveraged stresses criterion
3. Load cases
3.1 Torsion
3.2 Pure bending (4 point bending)
3.3 Bending with shear (3-point bending)
3.3.1 Method 1
3.3.2 Method 2

1. GENERAL

The objective of the analysis is to develop Finite Element Method (FEM) calculated figures as an alternative to the analytically calculated Stress Concentration Factors (SCF) at the crankshaft fillets. The analytical method is based on empirical formulae developed from strain gauge measurements of various crank geometries and accordingly the application of these formulae is limited to those geometries.

The SCF's calculated according to the rules of this document are defined as the ratio of stresses calculated by FEM to nominal stresses in both journal and pin fillets. When used in connection with the present method in Chapter 2.4 of this Part or the alternative methods, von Mises stresses shall be calculated for bending and principal stresses for torsion.

This procedure as well as the evaluation guidelines are valid for both solid crankshafts and semibuilt crankshafts (except for journal fillets).

The analysis shall be conducted as linear elastic FE analysis, and unit loads of appropriate magnitude shall be applied for all load cases.

The calculation of SCF at the oil bores is not covered by this Appendix.

It is advised to check the element accuracy of the FE solver in use, e.g. by modelling a simple geometry and comparing the stresses obtained by FEM with the analytical solution for pure bending and torsion.

The Boundary Element Method (BEM) may be used instead of FEM.

2. MODEL REQUIREMENTS

The basic recommendations and assumptions for building the FE-model are presented in 2.1. It is obligatory for the final FE-model to fulfil the requirement in 2.3.

2.1 Element mesh recommendations

In order to fulfil the mesh quality criteria, the FE model for the evaluation of Stress Concentration Factors shall be built according to the following recommendations:

The model shall describe one complete crank, from the main bearing centreline to the adjacent main bearing centreline.

Element types used in the vicinity of the fillets are:

10-node tetrahedral elements;

8-node hexahedral elements;

20-node hexahedral elements.

Mesh properties at fillet radii. The following requirements apply to ± 90-degree area in the circumferential direction from the crank plane:

Maximum element size $a = r/4$ through the entire fillet as well as in the circumferential direction. When 20-node hexahedral elements are used, the element size in the circumferential direction may be extended up to $5a$. In the case of multi-radii fillet, r is the local fillet radius. (If 8-node hexahedral elements are used, even smaller element size is required to meet the quality criteria.).

Recommended element sizes in fillet depth direction:

first layer thickness equal to element size of a;

second layer thickness equal to element size of $2a$;

third layer thickness equal to element size of $3a$.

Minimum of 6 elements across web thickness.

The rest of the crank should be suitable for the numeric stability of the solver.

Counterweights have to be modelled only when they significantly affect the total stiffness of the crank.

Modelling of oil bores is not necessary, if they negligibly affect the total stiffness and the proximity to the fillet is more than $2r$ (refer to Fig. 2.1).

Drillings and holes for weight reduction have to be modelled.

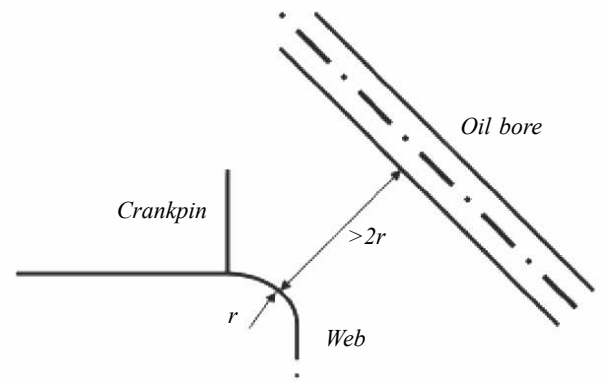

Fig. 2.1. Oil bore proximity to fillet

Sub-modelling may be used as far as the software requirements are fulfilled.

2.2 Material

Chapter 2.4 of this Part does not cover material properties such as Young's modulus (E) and Poisson's ratio (ν). These material parameters are required for FE analysis, as strains are primarily calculated and stresses are derived from strains using the Young's modulus and Poisson's ratio. Reliable values for material parameters have to be used, either as quoted in literature or as measured on representative material samples.

The following values are recommended for steel: $E = 2{,}05 \cdot 10^5$ MPa and $\nu = 0{,}3$.

2.3 Element mesh quality criteria

If the actual element mesh does not fulfil any of the following criteria for the SCF evaluation in the examined area, then a second calculation with a refined mesh shall be performed.

2.3.1 Principal stresses criterion

The mesh quality shall be assured by checking the stress component normal to the fillet radius surface. Ideally, this stress shall be zero. With principal stresses σ_1, σ_2 and σ_3, the following requirement shall be met:

$$\min(|\sigma_1|, |\sigma_2|, |\sigma_3|) < 0{,}03 \max(|\sigma_1|, |\sigma_2|, |\sigma_3|)$$

2.3.2 Averaged / unaveraged stresses criterion

This criterion is based on observing the discontinuity of stress results over the fillet elements in calculation of SCFs:

unaveraged nodal stress results calculated from each element connected to a node shall differ by less than 5 % from 100 % of averaged nodal stress results at this node in the examined area.

3. LOAD CASES

To substitute the analytically calculated SCFs as described in Chapter 2.4 of this Part, the following load cases have to be calculated.

3.1 Torsion

As with the testing used for the investigations made by FVV, the structure is loaded with pure torsion. Model end face warp is suppressed.

Torque is applied to the central node located at the crankshaft axis. This node acts as the master node with 6 degrees of freedom and is rigidly connected to all nodes of the end face.

Such boundary and load conditions are valid for both in-line and V-type engines.

For all nodes in both journal and crankpin fillets, the principal stresses are determined, and the equivalent torsional stress is calculated according to the following formula:

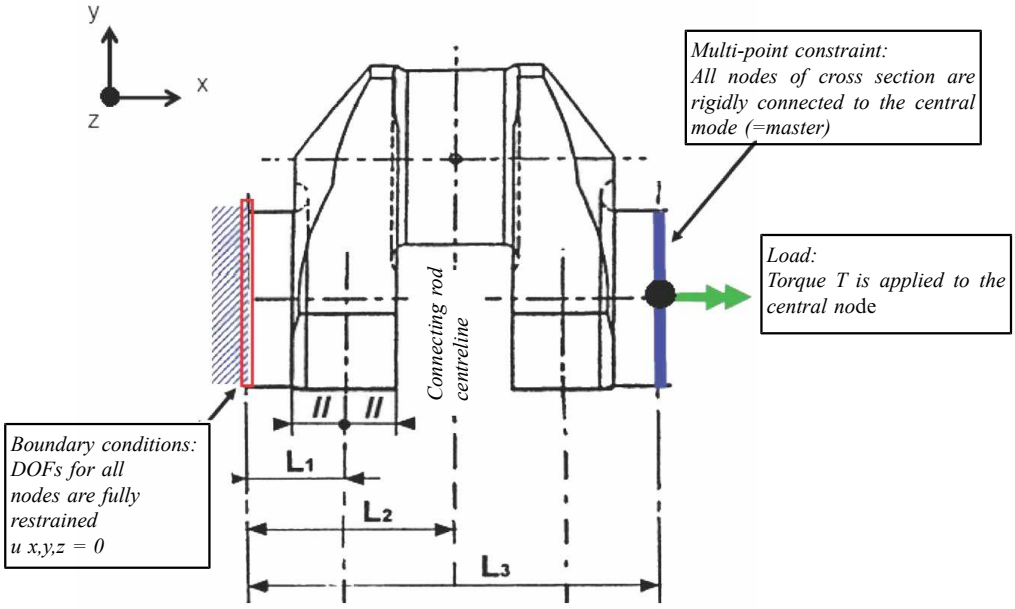

Fig. 3.1. Boundary and load conditions for torsion load case

$$\tau_{equiv} = \max\ (|\sigma_1 - \sigma_2|/2,\ |\sigma_2 - \sigma_3|/2,\ |\sigma_1 - \sigma_3|/2)$$

The maximum value taken for the subsequent calculation of the SCF is:

$$\alpha_T = \tau_{equiv,\alpha}/\tau_N$$

$$\beta_T = \tau_{equiv,\beta}/\tau_N$$

where τ_N is the nominal torsional stress in the crankpin and journal as per 2.4.5.1 of this Part at torsional torque T:

$$\tau_N = T/W_p$$

3.2 Pure bending (4 point bending)

As with the testing used for the investigations made by FVV, the structure is loaded with pure bending. In the model, surface warp at the end faces is suppressed.

The bending moment is applied to the central node located at the crankshaft axis. This node acts as the master node with 6 degrees of freedom and is rigidly connected to all nodes of the end face.

Such boundary and load conditions are valid for both in-line and V-type engines.

For all nodes in both journal and crankpin fillets, von Mises equivalent stresses σequiv are determined. The maximum value is used to calculate the SCF according to the following formulae:

$$\alpha_B = \sigma_{equiv,\alpha}/\sigma_N$$

$$\beta_B = \sigma_{equiv,\beta}/\sigma_N$$

Nominal stress σ_N is calculated as per 2.4.4.2 of Chapter 2.4 of this Part at the bending moment M as per the following formula:

$$\sigma_N = M/W_{equ}$$

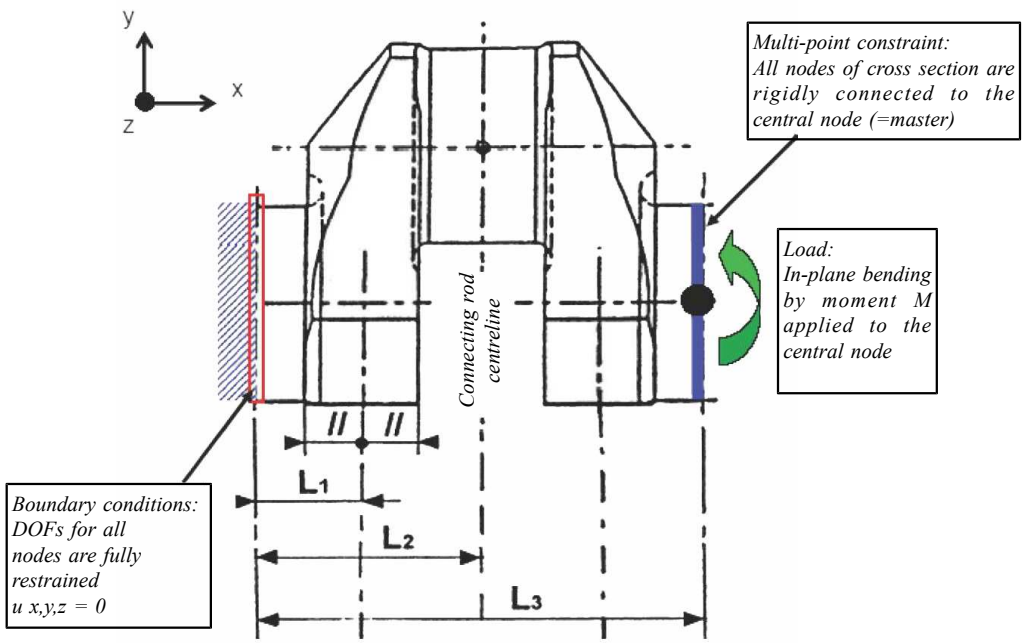

Fig. 3.2. Boundary and load conditions for pure bending load case

3.3 Bending with shear (3-point bending)

This load case is calculated to determine the SCF for pure transverse (radial) force βQ applied to the journal fillet.

As with the testing used for the investigations made by FVV, the structure is loaded with 3-point bending. In the model, surface warp at both end faces is suppressed. All nodes are rigidly connected to the central node; boundary conditions are applied to the central nodes. These nodes act as master nodes with 6 degrees of freedom.

The force is applied to the central node located on the crankpin at the connecting rod centreline. This node is connected to all nodes of the crankpin cross-section area. Cross-sectional warping is not suppressed.

Such boundary and load conditions are valid for both in-line and V-type engines. One connecting rod force only can be modelled for V-type engines. Using two connecting rod forces will make no significant change to SCF values.

The maximum equivalent von Mises stress σ3P in the journal fillet is calculated. The SCF for the journal fillet can be determined by two methods as described below.

3.3.1 Method 1

This method is similar to the FVV investigation procedure. The 3-point and 4-point bending calculation results are combined as follows:

$$\sigma_{3P} = \sigma_{N3P}\beta_B + \sigma_{Q3P}\beta_Q$$

where: σ_{3P} is as found by the FE calculation;

σ_{N3P} is the nominal bending stress in the web centre due to the force F_{3P} [N] applied to the centreline of the actual connecting rod (refer to Fig. 3.4);

β_{Q3P} is as determined in 3.2;

$\sigma_{Q3P} = Q_{3P}/(BW)$, where Q_{3P} is the radial (shear) force at the web due to the force F_{3P} [N] applied to the centreline of the actual connecting rod(also refer to Fig. 2.4.4.1-1 and 2.4.4.1-2 of this Part).

3.3.2 Method 2

This method differs from the FVV investigation procedure. In a statically determined system with one crank throw supported by two bearings, the bending moment and radial (shear) force are proportional.

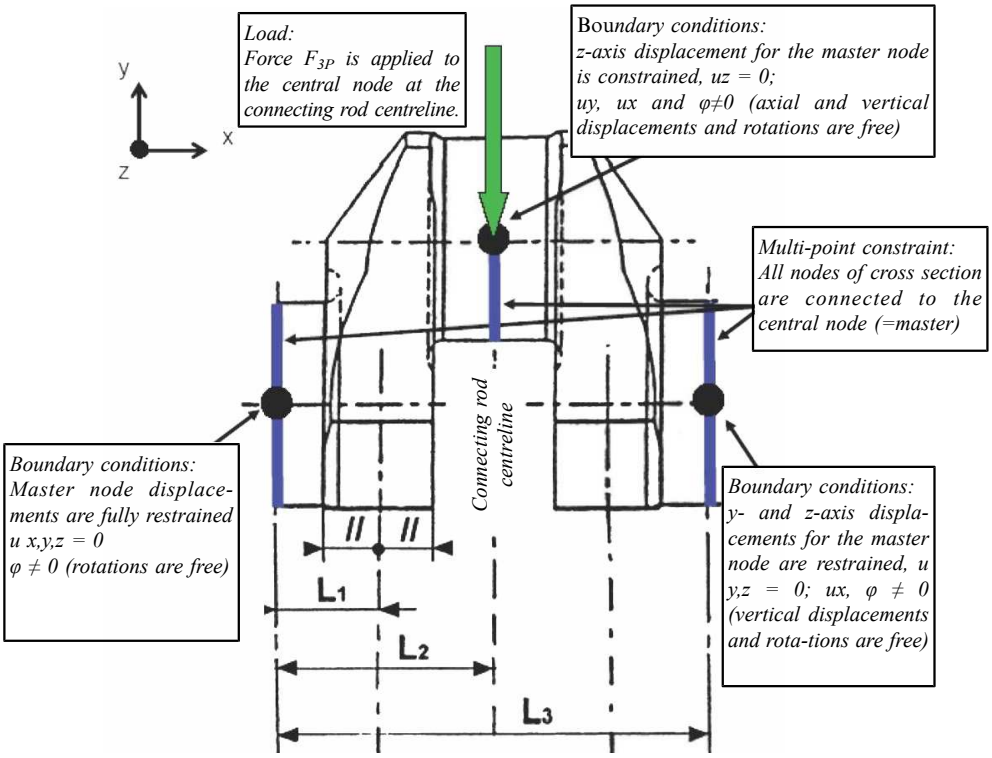

Fig. 3.3. Boundary and load conditions for 3-point bending load case of in-line engine

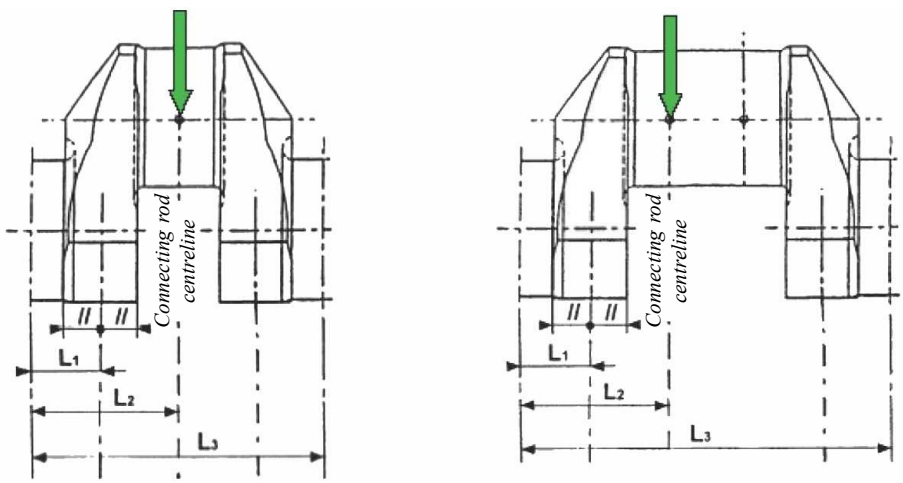

Fig. 3.4. Load applications for in-line and V-type engines

Therefore, the journal fillet SCF can be found directly by the 3-point bending FE calculation.

The SCF is calculated according to the following formula:

$$\beta_{BQ} = \sigma_{3P}/\sigma_{N3P}$$

For symbols, refer to 3.3.1.

When this method is used, the radial force and stress determination as per Chapter 2.4 of this Part becomes superfluous. The alternating bending stress in the journal fillet as per 2.4.4.3 of Chapter 2.4 of this Part is then calculated according to the following formula:

$$\sigma_{BG} = \pm |\beta_{BQ}\sigma_{BFN}|$$

This method does not apply to the crankpin fillet, and this SCF must not be used in the calculation methods other than those assuming a statically determined system as in Chapter 2.4 of this Part.

APPENDIX IV

GUIDANCE FO EVALUATION OF FATIGUE TESTS (REFER TO IACS M53)

1. Introduction
1.1 Small specimen testing
1.2 Full-size crank testing
2. Evaluation of test results
2.1 Principles
2.2 Staircase method
2.3 Modified staircase method
2.4 Calculation of sample mean and standard deviation
2.5 Confidence interval for mean fatigue limit
2.6 Confidence interval for standard deviation
3. Small specimen testing
3.1 Determination of bending fatigue strength
3.2 Determination of torsional fatigue strength
3.3 Other sampling locations
3.4 Correlation of test results
4. Full-scale testing
4.1 Hydraulic pulsation
4.2 Resonance test rig
4.3 Use of results and crankshaft acceptability
5. Use of available results for similar crankshafts

1. INTRODUCTION

Fatigue testing can be divided into two main groups: small specimen testing and full-scale crank throw testing. Testing can be performed using the staircase method or a modified version thereof. Other statistical evaluation methods may also be applied.

1.1 Small specimen testing

For crankshafts without any fillet surface hardening, the fatigue strength can be determined by testing small specimens taken from a full-size crank throw. However, this method shall not be applied, if the areas adjacent to the fillets are surface-hardened which causes residual stresses in the fillets.

This testing features possibility of manufacturing fairly large number of specimens for testing with various stress ratios R and in various load conditions (axial, bending and torsion), with or without a notch to evaluate characteristics of used materials under multiaxial loading conditions.

1.2 Full-size crank throw testing

For surface-hardened crankshafts, the fatigue strength can only be determined through testing of full-scale crank throws. In case of 3- or 4- point bending, the load can be applied using hydraulic actuators or an exciter in a resonance test rig which enables testing with R stress ratio equal to −1.

2. EVALUATION OF TEST RESULTS

2.1 Principles

Prior to fatigue testing, the crankshaft must be checked as required by the quality control procedures, including check for chemical composition of material, its mechanical properties, surface hardness, hardness depth and extension, crankpin/journal surface finish.

The test specimens shall be prepared so as to represent the "lower end" of the acceptance range; in particular, for induction hardened crankshafts this means the minimum acceptable hardness depth, shortest extension through a fillet, etc. Otherwise the mean test results shall be corrected in view of a confidence interval: a 90 % confidence interval may be used both for the mean and for the standard deviation.

The test results, when applied for Chapter 2.4 of this Part, shall be evaluated for compliance with the mean fatigue strength, with or without taking into account the 90 % confidence interval as mentioned above. The standard deviation shall be determined with taking the 90 % confidence interval into account. Subsequently the result to be used as the fatigue strength will be equal to the mean fatigue strength minus one standard deviation.

If the evaluation aims to find relation between mechanical properties of material under static load and fatigue strength, this relation must be based on the actual (i.e. measured) mechanical properties, not on the specified minimum values of these properties.

The calculation procedure presented in 2.4 can be applied both to the staircase method and to the modified staircase method.

2.2 Staircase method

In the staircase method, the first specimen is subjected to a stress corresponding to the expected average fatigue strength. If the specimen withstands 10^7 cycles, it is removed, and the next specimen is subjected to a stress that is one increment above the previous stress, i.e. a survivor is always followed by the next one which is subjected to a stress with one increment above the previous value. The increment shall be selected to correspond to the expected level of the standard deviation.

When a specimen fails before 10^7 cycles are completed, the actual number of cycles is noted, and the next specimen is subjected to a stress that is one increment below the previous one. With this approach, the sum of failed and successful tests is equal to the number of specimens.

The original staircase method is only applicable when a large number of specimens are available as about 25 specimens shall be used to obtain the sufficient accuracy of test result.

2.3 Modified staircase method

When the modified staircase method is applied, the first specimen is subjected to a stress level that is most likely well below the average fatigue strength. When this specimen has withstood 10^7 cycles, this same specimen is subjected to a stress level with one increment above the previous value. The increment shall be selected to correspond to the expected level of the standard deviation. The stepwise load increase process continues until the specimen fails. After the specimen fails, the next specimen is subjected to a stress that is at least 2 increments below the level at which the previous specimen failed.

With this approach, the number of failed and successful tests (in view of the highest level at which 10^7 cycles were reached) is usually equal to the number of specimens.

The acquired result of testing performed by the modified staircase method shall be used with care, since it is probable that stepwise increase of load applied to the specimen, especially at high mean stresses, tends to increase the fatigue limit. However, this "training effect" is less pronounced in testing of high strength steels with UTS > 800 MPa.

If the confidence calculation is required, the minimum number of test specimens is 3.

2.4 Calculation of sample mean and standard deviation

This section covers an example of testing for 5 crank throws. When the modified staircase method and the Dixon and Mood's evaluation method are applied, the number of specimens is 10, meaning 5 successful results and 5 failures:

Number of specimens n = 10

Furthermore, this method distinguishes between two cases:

Less frequent result is failure C = 1

Less frequent result is success C = 2

This method uses only the less frequent test results, i.e. if there are more failures than successes, the number of successes is used and vice versa.

In the modified staircase method, the numbers of successes and failures are usually equal. However, the testing can be unsuccessful, e.g. the number of successes can be less than the number of failures if a specimen with 2 increments below the previous failure level goes immediately to failure. On the other hand, if this unexpected premature failure occurs after a rather large number of cycles, it is possible to define the stress level below this as a success.

Dixon and Mood's approach derived from the maximum likelihood theory, which also may be applied here, especially in tests with few specimens, presents some simple approximate equations to calculate the sample mean and the standard deviation from the outcome of the staircase test. The sample mean can be calculated as follows:

$$\overline{S_a} = S_{a0} + d(A/F - 1/2) \text{ for C = 1}$$

$$\overline{S_a} = S_{a0} + d(A/F + 1/2) \text{ for C = 2}$$

The standard deviation can be found as follows

$$s = 1{,}62d\left(\frac{F \cdot B - A^2}{F^2} + 0{,}029\right)$$

where: S_{a0} is the lowest stress level for the less frequent result,
d is the stress increment,
$F = \Sigma fi$
$A = \Sigma i \cdot fi$
$B = \Sigma i^2 \cdot fi$
i is the stress level number,
fi is the number of specimens at stress level i

The formula for the standard deviation is an approximation and can be used when

$$\frac{B \cdot F - A^2}{F^2} > 0{,}3 \text{ and } 0{,}5s < d < 1{,}5s$$

If any of these two conditions are not fulfilled, a new staircase test shall be considered or the standard deviation shall be taken quite large in order to be on the safe side.

If increment d is much greater than the standard deviation s, this procedure results in a lower standard deviation and a slightly higher sample mean, both compared to values calculated when the difference between the increment and the standard deviation is relatively small. Thereafter if increment d is much less than the standard deviation s, this procedure results in a higher standard deviation and a slightly lower sample mean.

2.5 Confidence interval for mean fatigue limit

When the staircase fatigue test is repeated, the sample mean and the standard deviation will most likely be different from the previous test. Therefore, it is necessary to assure with a given confidence that the repeated test values will be above the chosen fatigue limit by using the confidence interval for the sample mean.

The confidence interval for the sample mean value with unknown variance is known to have t-distribution (also called Student's distribution) which is symmetric relative to the mean.

The confidence level normally used for the sample mean is 90%, meaning that 90% of sample means obtained from repeated tests will be above the value calculated with the chosen confidence level. The figure shows the t-value for (1 - α) □ 100 % confidence interval for the sample mean.

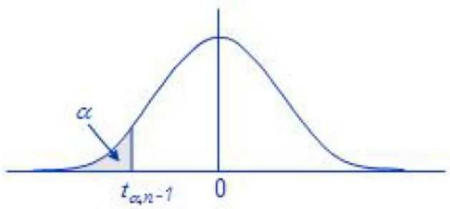

The confidence level normally used for the sample mean is 90%, meaning that 90% of sample means obtained from repeated tests will be above the value calculated with the chosen confidence level. The figure shows the t-value for (1 -) 100 % confidence interval for the sample mean.

Fig. 2.5. Student's distribution

If Sa is the empirical mean and s is the empirical standard deviation for a series of n specimens, in which the variable values are normally distributed with an unknown sample mean and unknown variance, the $(1-\alpha)\cdot 100$ % confidence interval for the mean is:

$$P(S_a - t_{a,\ n-1}\cdot s/\sqrt{n} < S_{aX\%}) = 1 - a$$

The resulting confidence interval is symmetric relative to the empirical mean of the sample values, and the lower limit can be found as:

$$S_{aX\%} = S_a - t_{a,\ n-1}\cdot s/\sqrt{n}$$

which is the mean fatigue limit (aggregate value) to be used to obtain the reduced fatigue limit where the failure probability limits are taken into consideration.

2.6 Confidence interval for standard deviation

The confidence interval for the variance of a normal random variable is known to possess a chi-square distribution with $n-1$ degrees of freedom.

The standard deviation confidence level is used to ensure that the standard deviations for repeated tests are below the upper limit obtained from the fatigue test standard deviation with a given confidence level. The figure shows the chi-square for $(1-\alpha)\cdot 100$ % confidence interval for the variance.

An assumed fatigue test result from n specimens is a normal random variable with a variance of σ^2 and has an empirical variance s^2. Then the $(1-\alpha)\cdot 100$ % confidence interval for this variance is:

$$P\left(\frac{(n-1)s^2}{\sigma^2} < \chi^2_{a,\ n-1}\right) = 1 - \alpha$$

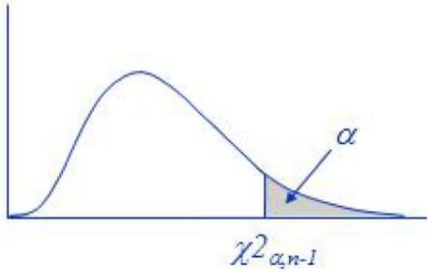

The standard deviation confidence level is used to ensure that the standard deviations for repeated tests are below the upper limit obtained from the fatigue test standard deviation with a given confidence level. The figure shows the chi-square for (1 -) 100% confidence interval for the variance.

Figure 2.6. Chi-square distribution

The (1 − α)·100 % confidence interval for the standard deviation is equal to the square root of the upper limit of the confidence interval for the variance and can be found as follows

$$S_{X\%} = \sqrt{\frac{n-1}{\chi^2_{a,\ n-1}}}\ S$$

This is the standard deviation (aggregate value) to be used to obtain the fatigue limit, where the failure probability limits are taken into consideration.

3. SMALL SPECIMEN TESTING

A small specimen here means one of the specimens taken from a crank throw. Since the specimens shall be representative for the fillet fatigue strength, they shall be taken out close to the fillets, as shown in Figure 3.

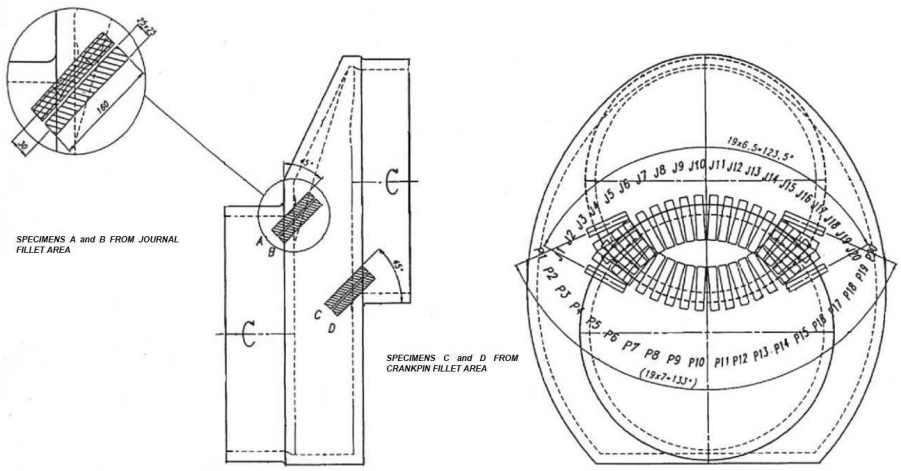

Fig. 3. Specimen locations in a crank throw

It shall be made certain that the principal stress direction in the specimen testing is equivalent to that in the full-size crank throw. The verification is recommended to be done by utilizing the finite element method.

The static mechanical properties are to be determined as stipulated by the quality control procedures.

3.1 Determination of bending fatigue strength

It is advisable to use unnotched specimens in order to avoid uncertainties related to the stress gradient influence. Alternate stress testing method (stress ratio R = –1) is preferred, but in view of testing peculiarities and for multiaxial loading conditions, other methods may be applied.

In order to ensure the principal stress direction in alternate stress testing to represent the principal stress direction at full-size crank throw and when no further information is available, the specimen shall be arranged at 45 degrees as shown in Fig. 3.

A. If the objective of the testing is to determine the influence of surface roughness, the specimens taken from the area of approximately 120 degrees in a circumferential direction may be used (refer to Fig. 3).

B. If the objective of the testing is to determine the influence of continuous grain flow (cgf) forging, the specimens shall be restricted to the vicinity of the crank plane.

3.2 Determination of torsional fatigue strength

A. If the specimens are subjected to torsional testing, the specimens shall be selected in view of the same criteria as for bending testing. The stress gradient influence has to be considered in the evaluation.

B. If the specimens are tested with alternate stress and no further information is available, the specimens shall be taken out within 45 degrees to the crank plane in order to ensure the principal stress direction collinearity between the specimens and the full-size crank throw. When the specimen is taken out at a distance from the (crank) middle plane of the crankshaft along the fillet, this plane can be rotated around the crankpin centre point making it possible to take several specimens to determine the torsional fracture direction (the results are to be converted into the pertinent torsional values).

3.3 Other sampling locations

If the test purpose is to find fatigue properties and the crankshaft is made by continuous forging, the specimens may also be taken longitudinally from a longer shaft pieces where mechanical testing specimens are usually taken from. The condition is that this long shaft piece is heat treated as a part of the crankshaft and its size provides a quenching rate similar to that of the crank throw.

When test results for a long shaft piece specimens are used, it shall be considered how well the grain structure in that shaft piece is representative for the crankpin fillets.

3.4 Correlation of test results

The fatigue strength resulted from specimen testing shall be converted to correspond to the full-size crankshaft fatigue strength.

When bending fatigue properties resulted from tests are used, it shall be kept in mind that successful continuous forging results in higher properties compared to other forging types, but it normally does not result in commensurable torsional fatigue strength improvement.

In such cases, it is advised to either carry out additional torsional testing or make a conservative evaluation of torsional fatigue strength, e.g. without continuous forging taken into account. This approach is applicable when the Gough-Pollard criterion is used. However, this approach is inapplicable when the von Mises criterion or multiaxial criteria such as Findley criterion are used.

If found ratio between bending and torsion fatigue differs significantly from $\sqrt{3}$, the Gough Pollard criterion shall be applied instead of the von Mises criterion. Besides, when the material properties under multiaxial loading conditions are investigated, it must be kept in mind that continuous forging along grain flow makes the material inhomogeneous in terms of fatigue strength, meaning that the material properties in different planes will differ.

Any addition of influence factors must be justified. Since the factors used for scaling of test results for a material not subjected to surface hardening and a material subjected to surface hardening may be different, it is preferred that specimens taken out of both hardened and unhardened materials are tested.

4. FULL-SCALE TESTING

4.1 Hydraulic pulsation

A hydraulic test rig can be arranged for testing a crankshaft with 3-point or 4-point bending and torsion which enables testing with any values of stress ratio R.

Although the applied load shall be verified with strain gauges on plain shaft sections for the initiation of the test, the use of the same for load control during the test is not necessary. It is also pertinent to check fillet stresses with strain gauge chains.

Furthermore, it is important that the test rig provides boundary conditions as defined in Appendix III (3.1 – 3.3).

The static mechanical properties are to be determined as stipulated by the quality control procedures.

4.2 Resonance test rig

A resonance test rig with relatively low power consumption is used to determine the torsion fatigue strength usually at stress ratio $R = -1$. Its operating frequency is usually relatively high, meaning that 10^7 cycles can be reached within some days. Fig. 4.2-1 shows the test rig setup.

The applied load shall be verified with strain gauges on plain shaft sections. It is also pertinent to check fillet stresses with strain gauge chains.

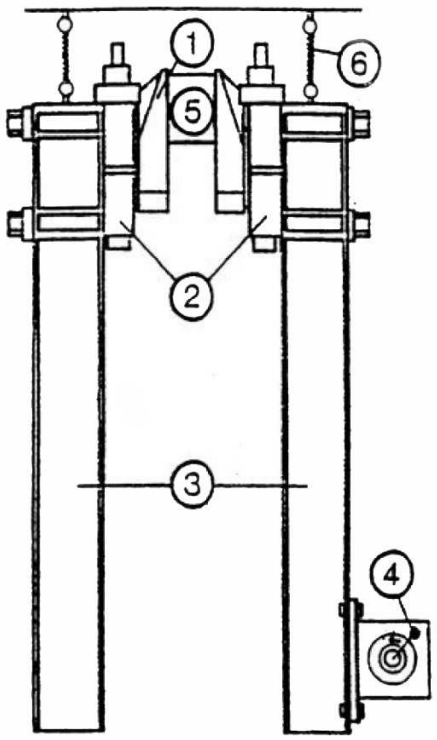

Fig. 4.2-1. An example of resonance test rig setup for bending loading test
1 — Crank throw; *2* — Mounts; *3* — "I" beam; *4* — Eccentric driven by speed-controlled motor;
5 — Strain gauge to adjust and monitor loading; *6* — Elastic suspension

Clamping around the journals must be arranged in a way that prevents severe fretting which could lead to a failure under the edges of the clamps. If some distance between the clamps and the journal fillets is provided, the loading will be consistent with 4-point bending and thus representative for the journal fillets too.

The crankpin fillets in an engine normally operate with stress ratio R slightly above –1, and the journal fillets, slightly below –1. If found necessary, it is possible to provide such load by creating a preload.

The torsion fatigue test rig setup is shown in Fig. 4.2-2. When a crank throw is subjected to torsional load, the crankpin twist makes the journals move sideways. If a single crank throw is tested in a torsional resonance test rig, the journals with their clamped-on weights may vibrate sideways. This sideway movement of the clamped-on weights can be reduced by using two crank throws, especially if the cranks are in the same direction. However, the journal in the middle will move more intensively.

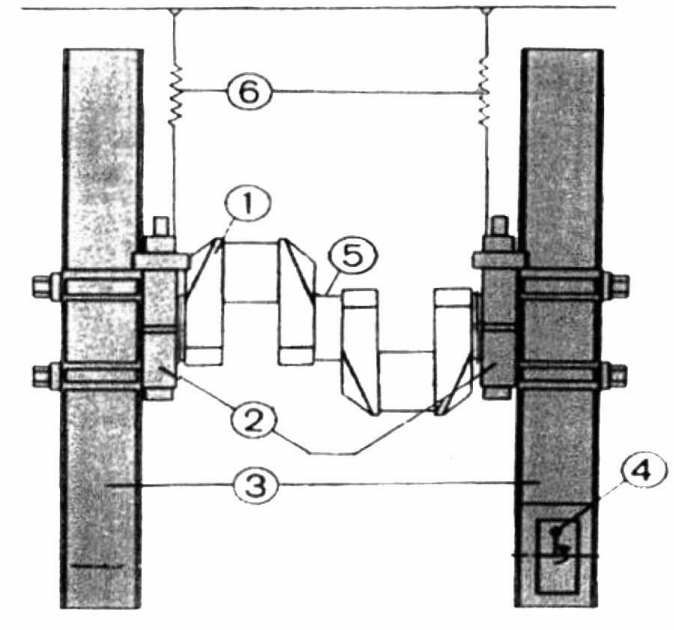

Fig. 4.2-2. An example of testing arrangement of the resonance tester for torsion loading with double crank throw section
1 — Crank throw; *2* — Clamp; *3* — I-beams; *4* — Motor-driven eccentric weight;
5 — Strain gage; *6* — Elastic suspension

Since sideway movements can cause some bending stresses, the plain portions of the crankpins shall also be provided with strain gauges arranged to measure any possible bending that could have effect on the test results.

As the case is for the bending test, the applied load shall be verified with strain gauges on plain shaft sections. It is also pertinent to check fillet stresses with strain gauge chains.

4.3 Use of results and crankshaft acceptability

In order to combine the bending and torsion fatigue strength test results in calculation of crankshaft acceptability (refer to 2.4.11 of this Part), the Gough-Pollard approach can be applied for the following cases:

As for the crankpin diameter:

$$Q = \left(\sqrt{(\sigma_{BH}/\sigma_{DWCT})^2 + (\tau_{BH}/\tau_{DWCT})^2}\right)^{-1}$$

where:
σ_{DWCT} is bending test fatigue strength
τ_{DWCT} is torsion test fatigue strength

As for the crankpin oil bore:

$$Q = \left(\sqrt{(\sigma_{BO}/\sigma_{DWOT})^2 + (\tau_{TO}/\tau_{DWOT})^2}\right)^{-1}$$

where:
σ_{DWOT} is bending test fatigue strength
τ_{DWOT} is torsion test fatigue strength

As for the journal diameter:

$$Q = \left(\sqrt{(\sigma_{BG}/\sigma_{DWJT})^2 + (\tau_G/\tau_{DWJT})^2}\right)^{-1}$$

where:
σ_{DWJT} is bending test fatigue strength
τ_{DWJT} is torsion test fatigue strength

If increase in fatigue strength due to surface treatment is considered to be similar between the above cases, it is sufficient to test only the most critical locations according to the calculation where surface treatment have not been taken into account.

5. USE OF AVAILABLE RESULTS FOR SIMILAR CRANKSHAFTS

For fillets or oil bores without surface treatment, the fatigue properties found by testing may be used for similar crankshaft designs if the following conditions are met:

Material:
similar material type;
roughness of the same level or better;
the same mechanical properties (ratio of dimensions and hardenability) can be given.

Geometry:
difference in effect of stress gradient due to size differences is insignificant or it is considered.
principal stress direction is equivalent. Refer to Chapter 3.

Manufacturing:
similar manufacturing process.

An induction hardened or gas nitrided crankshaft will suffer fatigue either at the surface or at the transition to the core. The surface fatigue strength as determined by fatigue tests of full-scale cranks may be used for crankshafts of equal or similar design, if the fatigue is initiated at the surface. The design similarity means the similar material type and surface hardness, as well as the fillet radius and the hardening depth within approximately ±30 % of the tested crankshaft values.

Fatigue initiation in the transition zone can be either subsurface, i.e. below the hard layer, or at the surface where the hardening ends. The fatigue strength at the transition to the core can be determined through the above fatigue tests provided that the fatigue occurred at the transition to the core. Tests made with the core material only will not be representative since they do not consider the tensile residual stresses in the transition zone.

It has to be noted that some recent research has shown that the fatigue limit can decrease in the very high cycle domain with subsurface crack initiation due to trapped hydrogen that accumulates through diffusion around some internal defects functioning as initiation points. In such cases, it would be appropriate to reduce the fatigue limit by a few percent per decade of cycles over 10^7. If hydrogen content is high, it is possible to apply reduction of 5 % per decade of cycles.

APPENDIX V

GUIDANCE FOR CALCULATION OF SURFACE TREATED FILLETS AND OIL BORE OUTLETS (REFER TO IACS M53)

Contents

1. Introduction
2. Definition of surface treatment
2.1 Surface treatment methods
3. Calculation principles
3.1 Evaluation of local fillet stresses
3.2 Evaluation of oil bore outlet stresses
3.3 Acceptability criterion
4. Induction hardening
4.1 Local fatigue strength
5. Nitriding
5.1 Local fatigue strength
6. Cold forming
6.1 Surface hardening by ball peening
6.1.1 Use of available results for similar crankshafts
6.2 Cold rolling
6.2.1 Use of available results for similar crankshafts

1. INTRODUCTION

This Appendix contains instructions for calculation of oil bore outlets and surface treated fillets. It explains how to consider various treatments and presents some empirical formulae for calculation purposes. The conservative empiricism has been applied intentionally in order increase calculation reliability.

It shall be noted that measurement results or more accurate data shall be used if available. However, in case of a wide scatter (e.g. for residual stresses), the values shall be chosen from the range end which would provide known greater persistence.

2. DEFINITION OF SURFACE TREATMENT

Surface treatment is a term covering thermal, chemical or mechanical treatments resulting in inhomogeneous material properties (hardness, chemistry or residual stresses) from the surface to the core.

2.1 Surface treatment methods

The following list covers possible treatment methods and how they influence the properties that are decisive for the fatigue strength.

Table 2.1

Treatment method	Affecting
Induction hardening	Hardness and residual stresses
Nitriding	Chemistry, hardness, and residual stresses
Case hardening	Chemistry, hardness, and residual stresses
Die quenching (no temper)	Hardness and residual stresses
Cold rolling	Residual stresses
Surface hardening by peening	Residual stresses
Shot peening	Residual stresses
Laser surface hardening	Residual stresses
Ball peening	Residual stresses
Note. It is important to note that since only induction hardening, nitriding, cold rolling and peening are considered relevant for marine engines, other methods and combination of two or more of the above are not dealt with in this document. In addition, die quenching can be considered in the same way as induction hardening.	

3. CALCULATION PRINCIPLES

The basic principle is that the alternating working stresses shall be below the local fatigue strength (including the effect of surface treatment) wherein non-propagating cracks may occur, also refer to 6.1 for details. This is then divided by the given safety factor. This principle applies to the entire fillets and oil bore outlets, as well as to the subsurface layer to a depth below the treatment-affected zone, i.e. to cover the depth all the way to the core.

Consideration of local fatigue strength shall include effect of local hardness, residual stress and mean working stress. Influence of 'giga-cycle effect', especially for initiation of subsurface cracks, shall be covered by the selected safety margin.

It is of vital importance that the extension of treatment in stress concentration zones be duly considered. Any transition, where hardening is ended, is likely to have considerable tensile residual stresses.

This forms 'weak spots' which is important if they are located within the area of high stresses.

Alternating and mean working stresses shall be known for the entire stress concentration zone and for a depth of about 1,2 times the treatment depth. The following figure shows how this principle is applied for induction hardening. X-axis is directed either to the depth (perpendicular to the surface) or along the fillet contour.

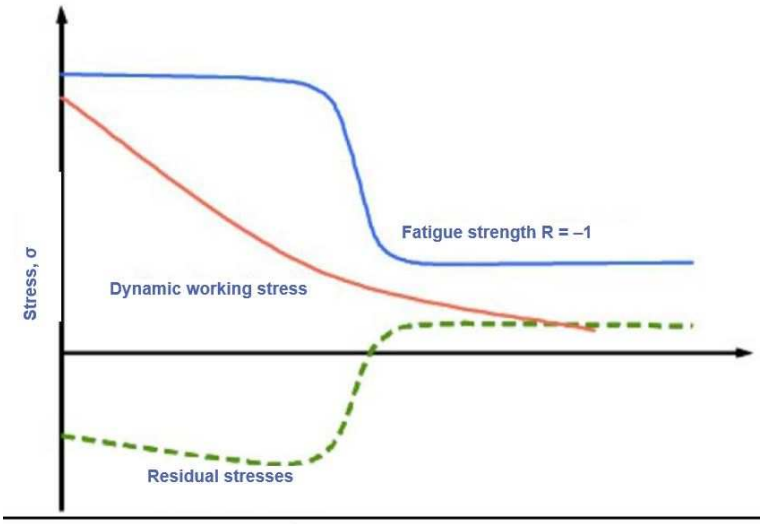

Fig. 3. Stresses as functions of depth, general principles

The acceptability criterion shall be applied stepwise from the surface to the core and from the point of maximum stress concentration along the fillet surface contour to the web.

3.1 Evaluation of local fillet stresses

It is necessary to know the stresses along the fillet contour and in the subsurface layer to a depth somewhat beyond the hardened layer. Normally such data can be found via FEA as described in Appendix III. However, the subsurface layer elements shall have the same sizes as the surface ones. For crankpin hardening case, only the small elements shall be spread along the surface to the hard layer.

If no FEA is possible, a simplified approach may be used for crankshafts made of steel. This can be based on the empirically determined SCFs as described in 2.4.6 of this Part, if within this method validity range, and on the relative stress gradient inversely proportional to the fillet radius. Bending and torsional stresses must be addressed separately. The combination of the above parameters shall meet the acceptability criterion.

The subsurface transition-zone stresses, with the minimum hardening depth, can be determined by means of local stress concentration factors along an axis perpendicular to the fillet surface. Functions $\alpha_{B\text{-}local}$ and $\alpha_{T\text{-}local}$ have different shapes because of different stress gradients.

SCFs α_B and α_T are valid at the surface. Local $\alpha_{B\text{-}local}$ and $\alpha_{T\text{-}local}$ drop with increasing depth. The relative stress gradients at the surface depend on the type of stress concentrator, but for the crankpin fillets they can be simplified to $2/R_H$ for bending and $1/R_H$ for torsion. The journal fillets are handled analogously with using R_G and D_G. The nominal stresses are assumed to be linear from the surface to the midpoint in the web between the crankpin fillet and the journal fillet for bending and to the crankpin or journal centre for torsion.

The local SCFs are then functions of depth t according to equation (3.1-1) and in Fig. 3.1-1 for bending and in equation (3.1-2) and Fig. 3.1-2 for torsion.

If the crankpin only is hardened and the end of the hardened zone is closer to the fillet than three times the maximum hardening depth, FEA shall be used to determine the actual stresses in the transition zone.

$$\alpha_{B-local} = (\alpha_B - 1) \cdot e^{\frac{-2t}{R_H}} + 1 - \left(\frac{2 \cdot t}{\sqrt{W^2 + S^2}} \right)^{\frac{0.6}{\sqrt{\alpha_B}}} \quad (3.1\text{-}1)$$

$$\alpha_{T-local} = (\alpha_T - 1) \cdot e^{\frac{-t}{R_H}} + 1 - \left(\frac{2 \cdot t}{D} \right)^{\frac{1}{\sqrt{\alpha_T}}} \quad (3.1\text{-}2)$$

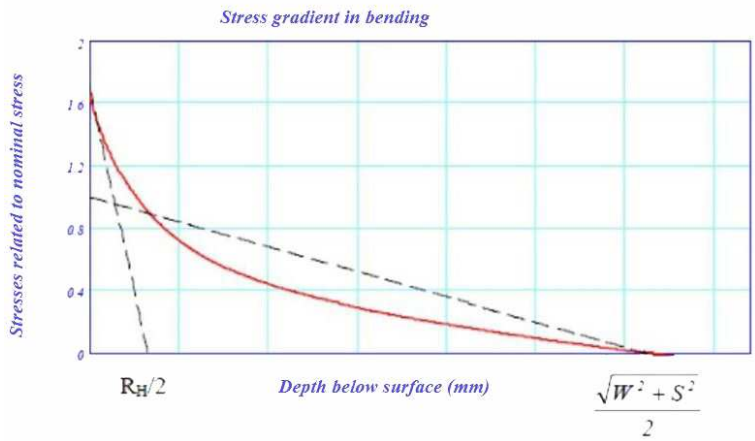

Fig. 3.1-1. Bending SCF in crankpin fillet as a function of depth. The corresponding SCF for the journal fillet can be found by replacing R_H with R_G

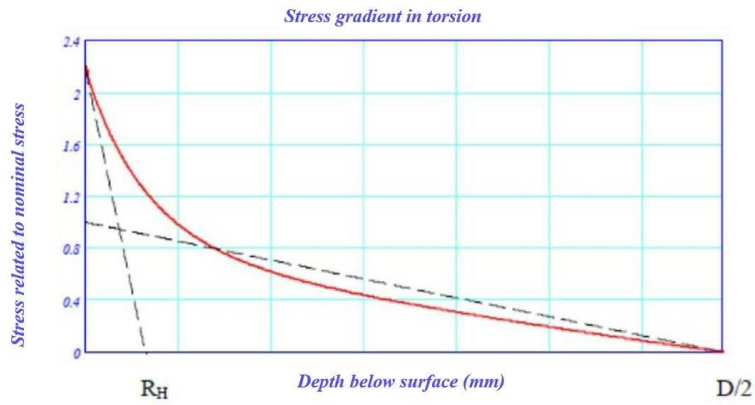

Fig. 3.1-2. Torsional SCF in crankpin fillet as a function of depth.
The corresponding SCF for the journal fillet can be found by replacing R_H with R_G and D with D_G

3.2 Evaluation of oil bore outlet stresses

Stresses in the oil bore outlets can be also determined by FEA. The element size shall not exceed 1/8 of the oil bore diameter Do and the element mesh quality criteria shall be followed as prescribed in Appendix III. The finite-element mesh shall continue well beyond the hardening depth in radial direction.

The loads to be applied in the FEA are the torque (refer to 3.1, Appendix III) and the four-point bending moment (refer to 3.2, Appendix III).

If no FEA is possible, a simplified approach may be used for crankshafts made of steel. This can be based on the empirically determined SCFs as described in 2.4.6 of this Part, if within this method validity range. Bending and torsional stresses at the peak stress point are combined according to 2.4.8 of this Part.

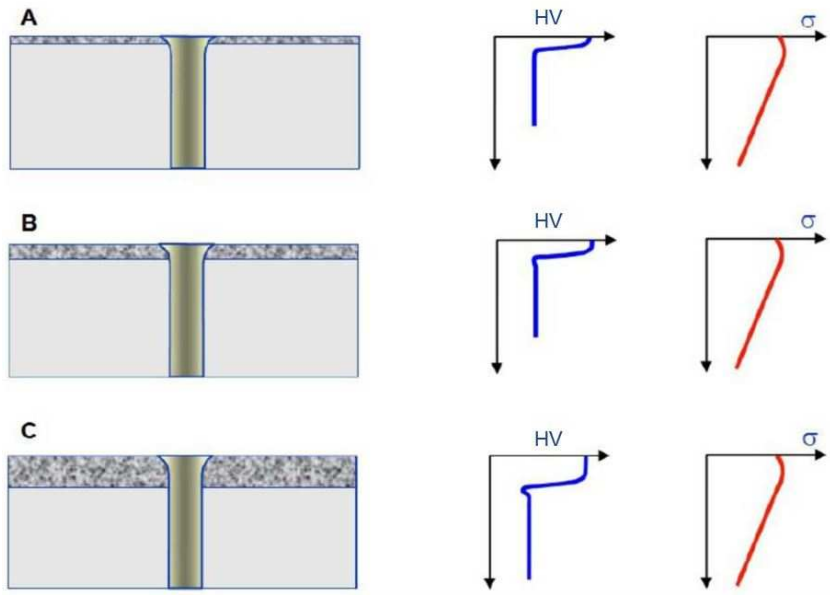

Fig. 3.2. Stresses and hardness in induction hardened oil hole outlets

Fig. 3.2 shows the hardness behaviour in the transition zone between the hard and soft zones of material. The behaviour depends among others on the tempering temperature in the QT process.

The peak stress in the bore outlets occurs at the end of the outlet rounding. The stress drops within this zone almost linearly over the distance to the crankpin centre. As can be seen in Fig. 3.2, for shallow (A) and intermediate (B) hardening, the transition point practically coincides with the peal stress point. As for deep hardening, the transition point comes outside of the peak stress point, and the local stress can be assessed as a portion equal to (1 – 2*tH/D*) of the peak stress where *tH* is the hardening depth.

The subsurface transition-zone stresses (at the minimum hardening depth) can be determined by means of local SCFs along an axis perpendicular to the oil bore outlet surface. These functions γB-local and γT-local have different shapes because of different stress gradients.

The SCFs γ_B and γ_T are valid at the surface. The local SCFs $\gamma_{B\text{-}local}$ and $\gamma_{T\text{-}local}$ drop with increasing depth. The relative stress gradients at the surface depend on the type of stress concentrator, but for crankpin oil bore outlets, they can be simplified to $4/D_o$ for bending and $2/D_o$ for torsion. The local SCFs are then functions of the depth *t*:

$$\gamma_{B\text{-}мест.} = (\gamma_B - 1)e^{-4t/D_o} + 1 \quad (3.2\text{-}1)$$

$$\gamma_{T\text{-}мест.} = (\gamma_T - 1)e^{-2t/D_o} + 1 \quad (3.2\text{-}2)$$

3.3 Acceptability criterion

The crankshaft design acceptability criterion is based on fatigue compliance. Chapter 2.4 of this Part compares the ration of equivalent alternating stress to fatigue strength with the acceptability factor of $Q > 1.15$ for oil bore outlets, crankpin fillets and journal fillets of steel crankshafts. This criterion shall also apply to the surface treated areas irrespective of the fact whether the surface or the transition zone is examined.

4. INDUCTION HARDENING

Generally, the hardness requirements shall specify the surface hardness range, i.e. minimum and maximum values, minimum and maximum extension in or through the fillet, as well as minimum and maximum depth along the fillet contour. Here, Vickers hardness scales within HV0.5 to HV5 shall be used.

The induction hardening depth is defined as the depth where the material hardness is 80% of the minimum specified surface hardness.

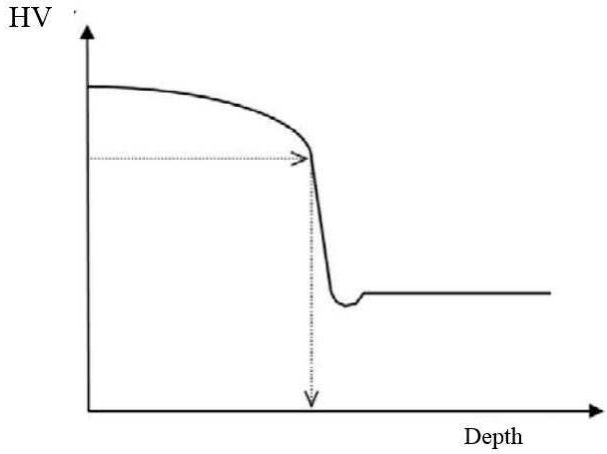

Fig. 4-1. Typical hardness as a function of depth. The arrows indicate the hardening depth. The possible hardness pattern in the transition zone to the core is shown. The shown hardness reduction zone could be a "weak" point: its local hardness could be reduced and residual tensile stress could occur in this point

In the case of crankpin or journal hardening only, the minimum distance to the fillet shall be specified in view of the tensile stress in the heat-affected zone as shown in Fig. 4-2.

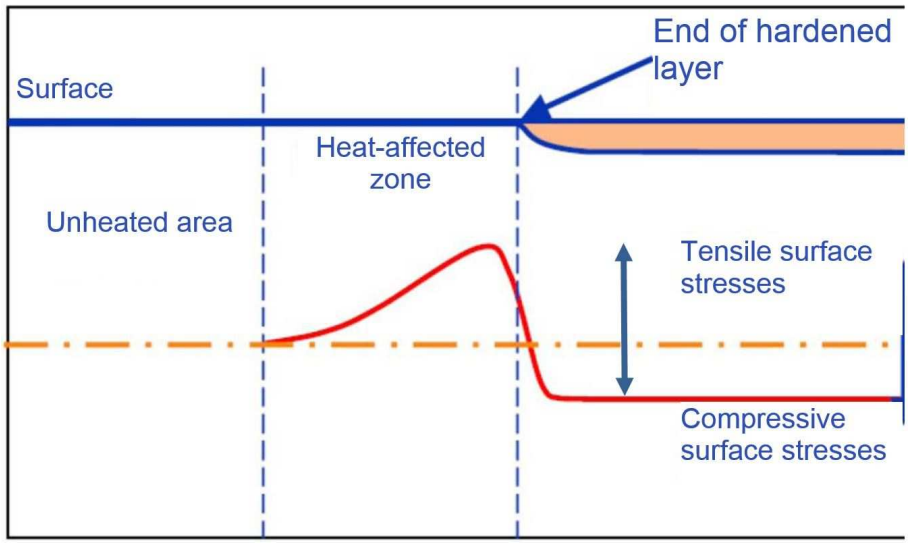

Fig. 4-2. Residual stresses along the surface of a crankpin and fillet

If the hardness-versus-depth profile and the residual stresses are unknown or unspecified, the following may be assumed:

The hardness profile consists of two layers (refer to Fig. 4-1):

constant hardness from the surface to the transition zone;

constant hardness from the transition zone to the core material;

the residual stresses in the hard zone are 200 MPa (compression);

the transition zone hardness is 90 % of the core hardness unless a hardness drop is present in the transition zone to the core shown in Fig. 4-1.

the maximum residual stresses (von Mises) in the transition zone are 300 MPa (tension).

If the crankpin or journal hardening ends are close to the fillet, the influence of tensile residual stresses has to be considered. If the minimum distance between the hardening end and the fillet beginning is more than 3 times the maximum hardening depth, the influence may be disregarded.

4.1 Local fatigue strength

Induction-hardened crankshafts will suffer fatigue either at the surface or at the transition to the core. The fatigue strength for both the surface and the transition zone can be calculated following the full-scale crankshaft fatigue testing results according to Appendix IV. In the case of a transition zone, the fatigue may occur either in the subsurface (i.e. below the hard layer) or at the surface where the hardening ends.

Tests made with the core material only are not representative since they do not consider the tensile residual stresses in the transition zone.

Alternatively, the surface fatigue strength for the steel crankshafts can be determined empirically as follows where HV is the Vickers surface hardness. Equation (4.1-1) provides a conservative value, with which the fatigue strength is assumed to include the influence of the residual stress. The resulting value is valid for R stress ratio of -1:

$$\sigma_{Fsurface.} = 400 + 0{,}5(HV - 400) \text{ [МПа]} \qquad (4.1\text{-}1)$$

It has to be noted that the mean stress influence for induction-hardened steels may be significantly higher than that for QT steels.

The fatigue strength in the transition zone, without taking into account any irregular hardness drop in the transition to the core as shown in Figure 4.-1, shall be determined by the equation introduced in 2.4.9 of this Part. The following formula applies to journal fillets and crankpin fillets, respectively:

$$\sigma_{Ftransition,\ cpin} = +K(0{,}42\sigma_B + 39{,}3)[0{,}264 + 1{,}073\,Y^{-0{,}2} + \frac{785 - \sigma_B}{4900} + \frac{196}{\sigma_B}\sqrt{1/X}\,] \qquad (4.1\text{-}2)$$

where:

$Y = D_G$ and $X = R_G$ for journal fillet
$Y = D$ and $X = R_H$ for crankpin fillet
$Y = D$ and $X = D_o/2$ for oil bore outlet

The influence of the residual stress is not considered in equation (4.1-2).

For the purpose of fatigue analysis of subsurface layer (below the hardened layer), the neglect of tensile residual stresses has to be considered by subtracting 20 % from the value determined above. This subtracted 20 % is based on the mean stress influence in the alloyed quenched and tempered steel having a residual tensile stress of 300 MPa. For low-strength steels, the percentage chosen shall be higher.

When the residual stresses are known to be lower, their actual value shall be taken into account.

For the purpose of analysis of surface fatigue near the end of the hardened zone, i.e. in the heat-affected zone shown in Fig. 4-2, the influence of the tensile residual stresses can be considered by subtracting a certain percentage in accordance with Table 4.1 from the value determined by the above formula.

Table 4.1

Influence of tensile residual stresses at a given distance from hardened zone end and fillet

I.	0 to 1.0 of the max. hardening depth:	20%
II.	1.0 to 2.0 max. hardening depths:	12%
III.	2.0 to 3.0 max. hardening depths:	6%
IV.	3.0 max. hardening depths or more:	0%

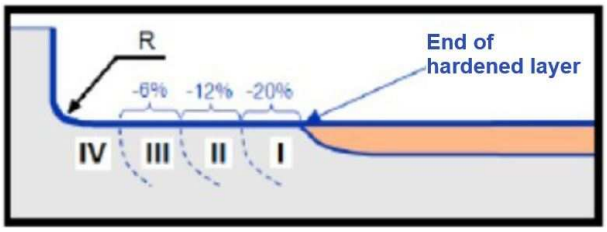

5. NITRIDING

The hardness requirements shall include the surface hardness range (min and max) and the minimum and maximum depth. This Section covers gas nitriding only. Here, Vickers hardness scales within HV0,5 shall be used.

For the purpose of this Section, the nitriding depth t_N is defined as the depth where the material hardness is 50 HV above the core hardness.

The hardening profile shall be specified all the way to the core. If this is unknown, it may be determined empirically via the following formulae:

$$HV(t) = HV_{core} + (HV_{surface} - HV_{core})\left(\frac{50}{HV_{surface} - HV_{core}}\right)^{(t/t_N)^2}$$

where:
t is the local depth
$HV(t)$ is the hardness at depth t
HV_{core} is the core hardness (minimum)
$HV_{surface}$ is the surface hardness (minimum)
t_N is the minimum nitriding depth

5.1 Local fatigue strength

It is important to note that in nitrided crankshaft cases, fatigue occurs either at the surface or at the transition to the core. This means that the fatigue strength can be determined by testing as described in Appendix IV.

Alternatively, the surface fatigue strength (principal stress) for the steel crankshafts can be determined empirically and conservatively as follows:

$$\sigma_{F_{surface}} = 450 \text{ МПа} \qquad (5.1\text{-}1)$$

The dependence (5.1-1) may be used if the fatigue strength is assumed to include the influence of the surface residual stress, and stress ratio R is -1.

The fatigue strength in the transition zone can be determined by the equation introduced

$$\sigma_{Ftransition,\ cpin} = +K(0{,}42\sigma_B + 39{,}3)[0{,}264 + 1{,}073\,Y^{-0{,}2} + \frac{785 - \sigma_B}{4900} + \frac{196}{\sigma_B}\sqrt{1/X}\,] \qquad (5.1\text{-}2)$$

where:
$Y = D_G$ and $X = R_G$ for journal fillet
$Y = D$ and $X = R_H$ for crankpin fillet
$Y = D$ and $X = D_o/2$ for oil bore outlet

The influence of the residual stress is not considered in equation (5.1-2).

In contrast to induction-hardened items, the nitrited items have no such distinct transition to the core. Although the compressive residual stresses at the surface are high, the balancing tensile stresses in the core are moderate because of the shallow depth. For the purpose of analysis of subsurface fatigue the neglect of tensile residual stresses in and below the transition zone may be even disregarded due to the smooth contour of the nitriding hardness profile.

Although the calculation generally shall be carried out along the entire hardness profile, it can be limited to a simplified approach of analyzing the surface and determining the conditional transition point which can be taken at the depth where the local hardness is approximately 20 HV above the core hardness. In this case, the core material properties shall be used in calculations, and the stresses at the transition to the core can be found by using the local SCF formulae and $t = 1.2\ t_N$.

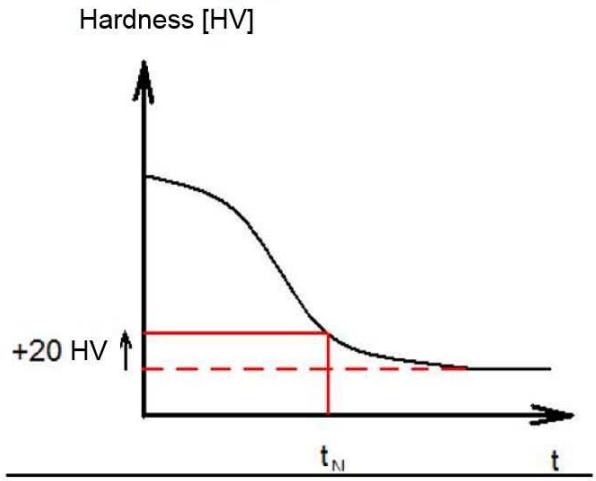

Fig. 5.1. Sketch of the location for the artificial transition point in the depth direction

6. COLD FORMING

The advantage of surface hardening by peening or cold rolling of fillets is the compressive residual stress introduced in the highly loaded areas. Even though the surface residual stresses can be determined by X-ray diffraction, and the subsurface residual stresses, by neutron diffraction, the local fatigue strength cannot be determined for certain; therefore, it shall be determined by fatigue testing in view of requirements of Appendix IV.

Such testing is normally carried out with four-point bending at stress ratio R of –1. Based on the test results, the bending fatigue strength (surface or subsurface one depending on the manner of failure) can be determined and taken as the representative fatigue strength for this type of loading in the fillet zone.

The ratio of torsion and bending fatigue strength in the fillet zone may differ considerably from the ratio of √3 which is used in the von Mises criterion. The reason for this is that the forming-affected depth, which is sufficient to prevent the bending subsurface fatigue, may still allow the torsion subsurface fatigue to occur and the extension of the highly loaded area.

The results obtained in a full-scale crankshaft test can be applied to other crankshaft sizes provided that their material as for amount of alloys and heat treatment is of the similar type and that the forming is done so as to obtain the similar level of compressive residual stresses both at the surface and in the depth, i.e. the cold forming extension and depth must be proportional to the fillet radius.

6.1 Surface hardening by ball peening

The fatigue strength can be determined by means of full-scale crankshaft tests or by empirical methods, if these provide a greater persistence. If both bending and torsion fatigue strengths have been investigated and their ration is found to differ from √3, the von Mises criterion shall be excluded.

If only bending fatigue strength is investigated, the torsional fatigue strength shall be evaluated conservatively. If the bending fatigue strength is found to be x% above the fatigue strength of the unhardened material, the torsional fatigue strength shall not be assumed to be more than 2/3 of x% above that of the unhardened material.

As a result of the peening process, the maximum compressive residual stress is found in the subsurface layer. Therefore, depending on the fatigue test load and the stress gradient, it is possible to have higher working stresses at the surface in comparison to the local fatigue strength. Because of this phenomenon small cracks may appear during the fatigue testing, which will not be able to propagate in further load cycles and/or with further slight increase of the test load due to the compressive residual stress profile because the high compressive residual stresses below the surface stop small surface cracks (refer to gradient load line 2 in Fig. 6.1).

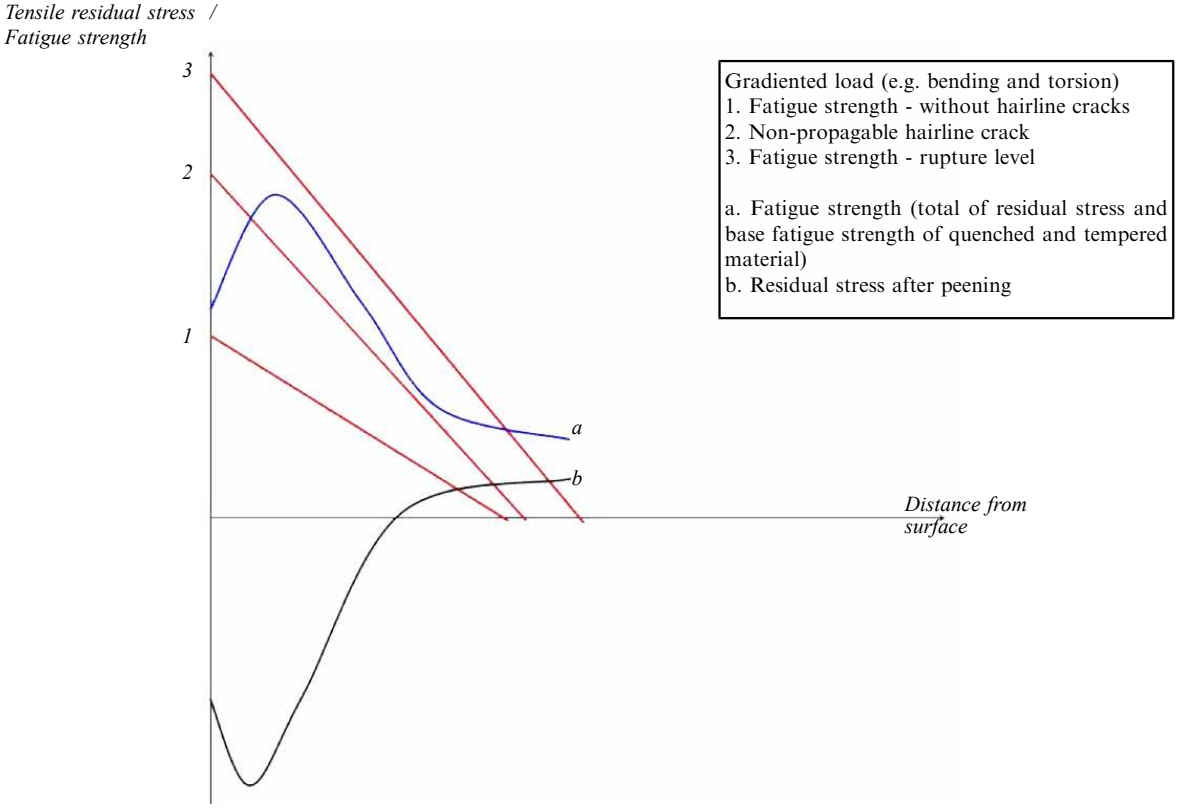

Fig. 6.1. Working and residual stresses below the stroke-peened surface. Straight lines 1 to 3 represent different possible load stress gradients

In fatigue testing of full-scale crankshafts, these small hairline cracks shall not be considered as cracks which can result in failure. The cracks caused by fatigue and capable of resulting in failure (stop of testing) only shall be considered in determining the failure load level. This also applies to peening of induction-hardened fillets.

In order to improve the fatigue strength of induction-hardened fillets, it is possible to apply the peening process to the crankshafts' fillets after they have been induction-hardened and tempered to the required surface hardness. If this is done, it might be necessary to adapt the peening force to the surface layer hardness and not to the base material strength limit. The effect of induction hardening followed by peening on the fillet fatigue strength shall be determined by full-scale crankshaft testing.

6.1.1 Use of available results for similar crankshafts

Data on change of fatigue strength resulted from surface layer peening may be utilized in calculation of other crankshafts if the following requirements are fulfilled:

ball size relative to fillet radius shall be within ±10 % of that for the tested crankshaft;

the shaft area subjected to surface hardening shall be equal to or exceed the similar area of the tested shaft;

the angular length of the fillet contour relative to the fillet radius shall differ by maximum of ±15 % from the tested crankshaft and be located to cover the stress concentration zone during engine operation;

the similar material, including amount of alloys and heat treatment, is used;

ball feed speed shall be of the same proportion to the radius;

force applied to a ball shall be proportional to base material hardness (if hardness values are different);

force applied to a ball shall proportional to square of ball radius.

6.2 Cold rolling

The fatigue strength can be determined by means of full-scale crankshaft tests or by empirical methods, if these provide a greater persistence. If both bending and torsion fatigue strengths have been investigated and their ration is found to differ from √3, the von Mises criterion shall be excluded.

If only bending fatigue strength is investigated, the torsional fatigue strength shall be evaluated conservatively. If the bending fatigue strength is found to be x % above the fatigue strength of the unhardened material, the torsional fatigue strength shall not be assumed to be more than 2/3 of x% above that of the unhardened material.

6.2.1 Use of available results for similar crankshafts

Data on change of fatigue strength resulted from cold rolling of surface layer may be utilized in calculation of other crankshafts if the following requirements are fulfilled:

the shaft area subjected to surface hardening shall be equal to or exceed the similar area of the tested shaft;

the angular length of the fillet contour relative to the fillet radius shall differ by maximum of ±15 % from the tested crankshaft and be located to cover the stress concentration zone during engine operation.

The similar material, including amount of alloys and heat treatment, is used;

force applied to a roller shall be calculated so as to achieve at least the same relative (to fillet radius) treatment depth.

APPENDIX VI

GUIDANCE FOR CALCULATION OF STRESS CONCENTRATION FACTORS IN OIL BORE OUTLETS OF CRANKSHAFTS USING FINITE ELEMENT METHOD (REFER TO IACS M53)

Contents

1. General
2. Model requirements
2.1 Element mesh recommendations
2.2 Material
2.3 Element mesh quality criteria
2.3.1 Principal stresses criterion
2.3.2 Averaged/unaveraged stresses criterion
3. Load cases and evaluation of stress level
3.1 Torsion
3.2 Bending

1. GENERAL

The objective of this analysis described in this document is to substitute the analytical calculation of the stress concentration factor (SCF) at the oil bore outlets with suitable finite element method (FEM) calculated figures. The analytical method is based on empirical formulae developed from strain gauge readings or photoelasticity measurements of various round bars. Since use of these formulae beyond any of the parameter validity ranges can result in errors in either direction, the FEM is highly recommended.

The SCF calculated according to the rules set forth in this document is defined as the ratio of FEM-calculated stresses to nominal stresses calculated analytically.

When the method is used to make calculations according to Chapter 2.4 of this Part, principal stresses shall be calculated.

The analysis is to be conducted as linear elastic FE analysis, and unit loads of appropriate magnitude are to be applied for all load cases.

It is recommended to check the element accuracy of the FE solver in use, e.g. by modelling a simple geometry and comparing the FEM-obtained stresses with the analytical solution.

The Boundary Element Method (BEM) may be used instead of FEM.

2. MODEL REQUIREMENTS

The basic recommendations and assumptions for building the FE-model are presented in 2.1. The final FE-model must meet one of the criteria presented in 2.3.

Element mesh recommendations

In order to fulfil the mesh quality criteria, the FE model for the evaluation of Stress Concentration Factors shall be built according to the following recommendations:

The model shall describe one complete crank, from the main bearing centreline to the adjacent main bearing centreline.

The following element types are used in the vicinity of the outlets:

10-node tetrahedral elements;

8-node hexahedral elements:

20-node hexahedral elements.

The following mesh properties are used in the vicinity of the oil bore outlets:

maximum element size $a = r/4$ through the entire outlet fillet and in the oil bore direction (if 8-node hexahedral elements are used, even smaller elements are required to meet the mesh quality criteria).

Recommended element sizes in fillet depth direction:

first layer thickness equal to element size of a;

second layer thickness equal to element size of $2a$;

third layer thickness is equal to element size of $3a$.

Generally the rest of the crank shall provide the numeric stability of the solver.

Drillings and holes for weight reduction have to be modelled.

Sub-modelling may be used as far as the software requirements are fulfilled.

2.2 Material

Chapter 2.4 of this Part does not cover material properties such as Young's modulus (E) and Poisson's ratio (v). In FE analysis, these material parameters are required, as elastic strains are primarily calculated and stresses are derived from elastic strains using the Young's Modulus and Poisson's ratio. Valid values for material parameters have to be used, either as quoted in literature or as measured on representative material samples.

The following values are recommended for steel: $E = 2.05 \cdot 10^5$ MPa and $v = 0.3$.

2.3 Element mesh quality criteria

If the actual element mesh does not fulfil any of the following criteria for SCF evaluation in the examined area, then a second calculation with a refined mesh is to be performed.

2.3.1 Principal stresses criterion

The mesh quality shall be assured by checking the stress component normal to the surface of the oil bore outlet radius. With principal stresses σ_1, σ_2 and σ_3, the following requirement shall be met:

$$\min(|\sigma_1|, |\sigma_2|, |\sigma_3|) < 0.03 \cdot \max(|\sigma_1|, |\sigma_2|, |\sigma_3|)$$

2.3.2 Averaged / unaveraged stresses criterion

The averaged / unaveraged stress criterion is based on observing the discontinuity of stress results over the fillet elements in calculation of SCFs:

unaveraged nodal stress results calculated from each element connected to a node shall differ by less than 5 % from 100 % of averaged nodal stress results at this node in the examined area.

3. LOAD CASES AND EVALUATION OF STRESS LEVEL

To substitute the analytically calculated SCFs as described in 2.4 of this Part, the following load cases have to be calculated.

3.1 Torsion

The structure is loaded in pure torsion. Model end face warp is suppressed.

Torque is applied to the central node located at the crankshaft axis. This node acts as the master node with 6 degrees of freedom and is rigidly connected to all nodes of the end face.

Such boundary and load conditions are valid for both in-line and V-type engines.

For all nodes at the oil bore outlet, the principal stresses are obtained and the maximum value of them is taken for subsequent calculation of SCF:

$$\gamma_T = \frac{\max(|\sigma_1|, |\sigma_2|, |\sigma_3|)}{\tau_N}$$

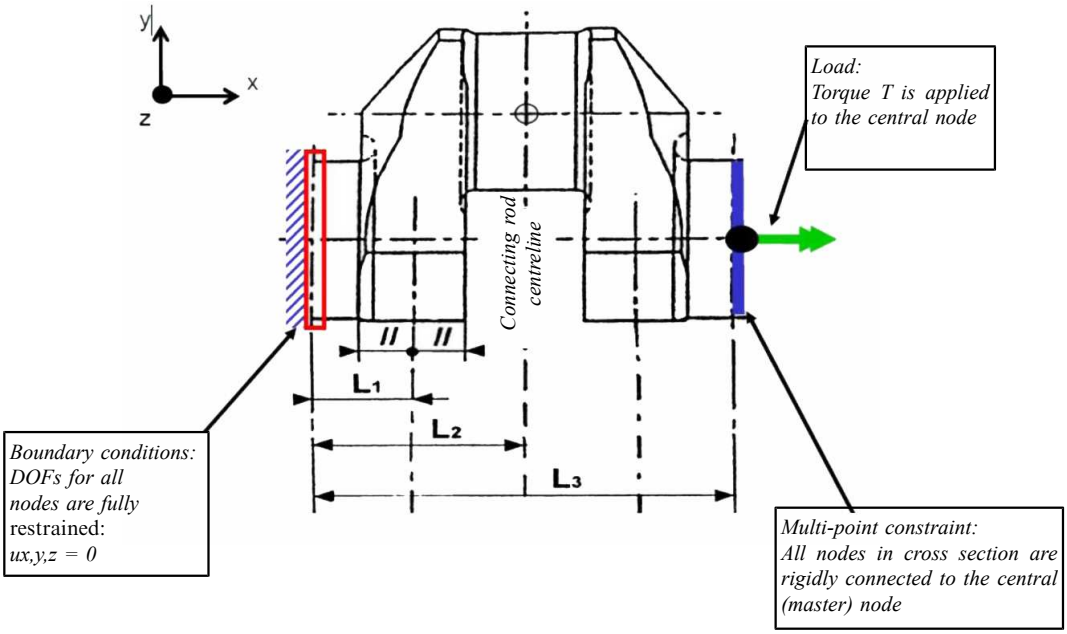

Fig. 3.1. Boundary and load conditions for torsion load case

where the nominal torsion stress τN at the crankpin is evaluated as per 2.4.5.1of this Part at torque *T*:

$$\tau_N = T/W_p$$

3.2 Bending

The structure is loaded with pure bending. Model end face warp is suppressed.

The bending moment is applied to the central node located at the crankshaft axis. This node acts as the master node with 6 degrees of freedom and is rigidly connected to all nodes of the end face.

Such boundary and load conditions are valid for both in-line and V-type engines.

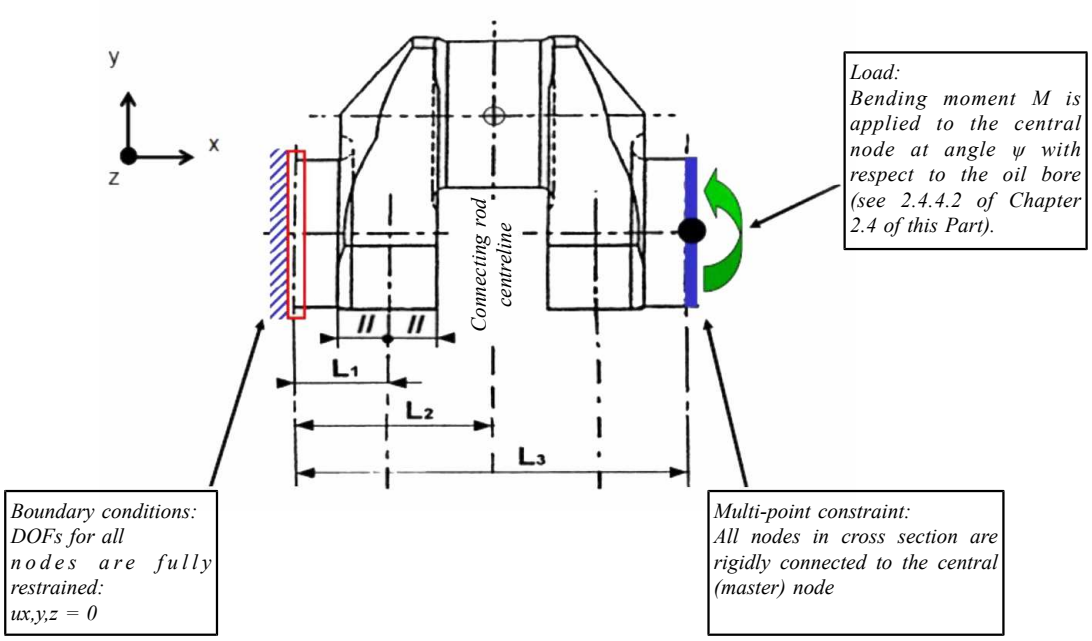

Fig. 3.2. Boundary and load conditions for pure bending load case

For all nodes at the oil bore outlet, the principal stresses are obtained and the maximum value of them is taken for subsequent calculation of SCF:

$$\gamma_B = \frac{\max(|\sigma_1|, |\sigma_2|, |\sigma_3|)}{\sigma_N}$$

where the nominal bending stress σ_N at the crankpin is evaluated as per 2.4.4.2 of this Part at bending moment *M*:

$$\sigma_N = M/W_e$$

3 STEAM TURBINES

3.1 GENERAL

3.1.1 The main geared turbine installation shall be capable of reversing from full speed ahead at the rated power to astern speed, and reversing in the opposite direction by using backsteam.

3.1.2 The turbine installation intended for propulsion shall comply also with the requirements of 2.1, Part VII "Machinery Installations".

In multi-screw ships with a fixed-pitch propeller a turbine installation of each shaft shall be provided with an astern turbine.

3.1.3 Auxiliary turbines shall be started without preheating.

3.1.4 In single screw ships fitted with cross compound steam turbines, the arrangement shall be such as to enable safe navigation when the steam supply to anyone of the turbines is required to be isolated. For this emergency operation purpose the steam may be led directly to the L.P. turbine, and either the H.P. or M.P. turbine can exhaust direct to the condenser.

Adequate arrangements and controls shall be provided for these operating conditions so that the pressure and temperature of the steam will not exceed those, which the turbine and condenser can safely withstand.

All piping and valves of these arrangements shall be readily available and properly marked. A fit up test of all combinations of pipes and valves shall be performed prior to the first sea trials.

The permissible power/speeds when deactivating one of the turbines; appropriate information shall be provided on board. The operation of the turbines under emergency conditions shall be assessed for potential influence on shaft alignment and gear teeth loading conditions.

3.2 ROTOR

3.2.1 The strength of rotor parts shall be calculated for maximum power, as well as for other possible loads at which stresses may rise to maximum values.

Moreover, a check calculation of stresses shall be made for the rotor and parts thereof at a speed exceeding the maximum values by 20 %.

3.2.2 The critical speed of the rotor shall be in excess of the rated speed corresponding to the rated power by not less than 20 %.

The critical speed of the rotor may be reduced, provided there is an ample proof of the reliability of the turbine under all operating conditions.

3.2.3 Each new design of blading requires a calculation of vibration with subsequent verification of vibration characteristics by experiments.

3.2.4 The construction of blade tenon with detachable part of the disc side and other similar constructions, which may cause considerable local loosening of the rim are not allowed.

3.2.5 Completely assembled turbine rotors shall be dynamically balanced in a machine of sensitivity appropriate to the size and the mass of the rotor.

3.3 CASING

3.3.1 In cast steel turbine casings it is permitted for some cast elements and branches for connecting receivers, pipes and valves to be joined by welding.

3.3.2 The connection of the astern turbine steam inlet branch with the turbine casing shall not be rigid.

3.3.3 Gaskets between the flanges of horizontal and vertical joints of turbines shall not be used. Planes of the joints are allowed to be coated with graphite paste for the purpose of sealing.

3.3.4 The diaphragms fixed in the turbine casing shall have a possibility of radial thermal expansion within permissible misalignment.

3.3.5 The diaphragms shall be designed for a load corresponding to the maximum pressure drop in the stage. The actual deflection of the diaphragms shall be less than that, which may cause touching of the discs or of the rotor shaft sealing.

3.3.6 The low pressure turbine casing shall be provided with openings for the inspection of blading in the last stages. The turbines with built-in condensers shall be provided with openings for the inspection of the upper rows of condenser tubes, and, where possible, for access inside the condenser.

3.3.7 The turbine shall be so designed as to allow lifting bearing caps without dismantling the turbine casing, ends of sealing arrangements and pipelines.

3.4 BEARINGS

3.4.1 In main turbines sleeve bearings shall be used. For turbines designed for quick starting when in cold condition, it is recommended to use bearings with self-aligning shells.

3.4.2 Thrust bearings of the main turbines shall, as a rule, be of a single-collar type. The use of bearings of other types shall be approved by the Register.

The bearings loaded with specific pressure of more than 2 MPa are recommended to be fitted with pivoted races or with devices for automatic equalization of pressure exerted on the pads.

3.4.3 The thickness of antifriction lining of thrust bearing pads shall be less than the minimum axial clearance in the turbine blading, but not less than 1 mm.

3.5 SUCTION, GLAND-SEALING AND BLOWING SYSTEMS

3.5.1 The main turbine installation shall be provided with a steam suction and gland-sealing system, with automatic control of pressure of the sealing steam.

In addition to automatic control, provision shall also be made for manual control of the steam suction and gland-sealing system.

3.5.2 Each turbine shall have a blowing system to ensure complete removal of condensate from all stages and spaces of the turbine.

The blowing system shall be so arranged as to prevent the condensate from entering the turbines being at standstill.

3.6 CONTROL, PROTECTION AND REGULATION

3.6.1 Each main turbine installation shall be provided with a manoeuvring gear designed for control and manoeuvring purposes.

Manoeuvring valves for turbine installation of 7500 kW and over shall be power-driven, emergency manual control of the valves shall be provided as well.

3.6.2 The time required for resetting the controls of the turbine installation manoeuvring gear from full ahead to full astern or vice versa shall not be in excess of 15 s.

The manoeuvring gear shall be so designed as to exclude the possibility of simultaneous steam supply both to the ahead and astern turbines.

3.6.3 The main and auxiliary turbines shall be provided with overspeed devices acting on an automatic safety device (quick-closing stop valve) automatically shutting off the admission of steam

into the turbine when the rotor speed is in excess of the speed corresponding to the maximum power by 15 %.

The quick-closing stop valve shall be actuated by the overspeed device directly connected with the turbine shaft. An oil actuator receiving impulse from an impeller directly driven by the turbine shaft may be used as an overspeed device.

In case of turbine installations with several cylinders each turbine shaft shall be fitted with an overspeed device.

The turbine installations intended for use in the plants incorporating reverse gear, controllable-pitch propeller or other arrangements disengaging the turbine from the shafting, in addition to the overspeed device, shall be fitted with a speed governor limiting the turbine speed when the load is changed before the overspeed device is put into operation.

The speed governors of auxiliary turbines intended for driving electric generators shall comply with the requirements of 2.11.3 to 2.11.7.

3.6.4 Each turbine shall be fitted with a hand-operated device to shut off the steam in emergency by closing the quick-acting stop valve.

In case of main turbine installation, this device shall be operated from two positions, one located on one of the turbines and the other in the control station.

In case of auxiliary turbine installation, this device shall be located adjacent to the overspeed device.

3.6.5 The steam pipelines between the manoeuv-ring gear and nozzle box shall be of the volume as small as practicable to eliminate impermissible overspeed of the turbine when the quick-closing stop valve is shut in emergency.

3.6.6 In extraction turbines, bleed pipelines shall be fitted with non-return stop valves to automatically close simultaneously with the quick-closing valve.

Where exhaust steam from auxiliary systems is led to the turbines of the main turbine installation, it shall be cut off in case of emergency operation of the quick-closing stop valve.

3.6.7 The main turbine installations and turbines for driving electric generators in addition to the overspeed device shall be fitted with devices capable of automatically actuating the quick-closing stop valve and shutting off the admission of steam into the turbine in the following cases:

.1 drop of the lubricating oil pressure in the system below the value specified by the manufacturer;

.2 rise of pressure in the condenser above the value specified by the manufacturer;

.3 maximum shifting of rotor in any turbine incorporated in the propulsion turbine set.

For main turbine installations shutting off the steam supply to the ahead turbines in case of lowering of pressure in lubricating oil system shall not prevent the admission of steam to the astern turbine.

3.6.8 To prevent inadmissible rise of the lubricating oil temperature in any of the main turbine bearings, provision shall be made for a warning alarm system.

3.6.9 Safety valve or an equivalent arrangement shall be provided at the exhaust end of all turbines.

The safety valve discharge outlets shall be visible and suitably guarded if necessary.

3.6.10 Efficient steam strainers shall be provided close to the inlets to ahead and astern high-pressure turbines or alternatively at the inlets to the manoeuvring valves.

3.6.11 For main turbine installations a slow-turning device, which operates automatically, shall be provided. Discontinuation of this automatic turning from the bridge shall be possible.

3.7 INSTRUMENTATION

3.7.1 The main turbine installation control stations shall be fitted with instruments for measuring:

.1 speed of the turbine shaft and shafting;

.2 steam pressure and temperature after the manoeuvring valve, in the nozzle boxes of ahead and astern turbines, in the governing stage chamber, bleed mains and the suction and gland-sealing system;

.3 outlet lubricating oil temperature in each bearing (the use of remote temperature indicators does not eliminate the necessity of fitting local thermometers);

.4 conditions of prestarting, reversing, stand-by keeping and bringing to prolonged inoperative state;

.5 lubricating oil pressure in the pressure pipelines after the oil cooler;

.6 vacuum in compliance with 19.4.1.2, Part VIII "Systems and Piping".

3.7.2 Apart from the instruments specified in 3.7.1, the main turbine installation shall be provided with:

.1 instruments for checking lubricating oil supply to each bearing;

.2 indicators for determining the axial position of the rotor;

.3 regular devices for measuring the wear of white metal of shells and segments of each journal and thrust bearing;

.4 bridge gauges or other instruments for checking vertical and horizontal positions of each rotor;

.5 instruments for checking the steam pressure and temperature under emergency conditions with any turbine cylinder being shut off.

3.7.3 The auxiliary turbines for driving generators shall be fitted with instruments in compliance with 3.7.1.

3.7.4 The turbine installation shall be fitted with the warning alarms for the following parameters:

.1 drop of the lubricating oil pressure in the lubricating oil system;

.2 rise of the lubricating oil temperature at each bearing outlet;

.3 rise of the lubricating oil pressure at the turbine installation inlet;

.4 rise of the pressure in the condenser;

.5 axial shift of rotors.

.6 on exceeded levels of vibration on bearings (considering the manufacturer's recommendations).

4 GEARS, DISENGAGING AND ELASTIC COUPLINGS

4.1 GENERAL

4.1.1 The reverse-reduction gearing intended for propulsion shall also comply with the requirements of 2.1, Part VII "Machinery Installations".

4.1.2 Parts rotating at speeds 5 to 20 m/s shall be statically balanced, while those rotating at speeds over 20 m/s shall be dynamically balanced. The accuracy of dynamic balancing shall be determined on the basis of the formulae:

$$v = 24000/n \quad \text{with } v > 300; \tag{4.1.2-1}$$

$$v = 63000/n \quad \text{with } v = 20 \tag{4.1.2-2}$$

where v = distance between the centre of gravity and the geo-metrical axis of rotation of the part concerned, μm;
n = rotational speed, min^{-1};
v = peripheral velocity, m/s.

For peripheral velocities between 20 and 300 m/s, shall be determined by interpolation.

The rigid elements of couplings shall be balanced together with the parts they rigidly adjoin.

4.1.3 The design of the main gearing shall provide an access to all bearings.

The gear cases shall have a sufficient number of sight openings with easily detachable covers for carrying out internal inspection.

The sight openings shall be so arranged as to allow an inspection of the teeth over their full length and of the bearings inside the gearing.

The application of this requirement to the planetary gear shall be performed as far as their design allows.

4.1.4 The gear cases shall be provided with venting arrangements.

The vent pipes shall be led to the upper weather deck or other positions where uptake is provided.

The ends of the vent pipes shall be fitted with flame-arresting devices and arranged so as to prevent water from getting into the gearing.

4.1.5 Where the main thrust bearing is housed in the gearing case, the lower part of the case shall have proper strengthening.

4.2 GEARING

4.2.1 General.

4.2.1.1 The requirements of the Chapter cover external and internal cylindrical involute spur, helical and double helical gears and bevel gears with straight, tangent and circular arc teeth, operating with lubrication and intended both as components of main propulsion plants (main gearing) and auxiliaries (auxiliary gearing) on board ships of various types.

The above requirements shall be satisfied in the case of units with parallel and intersecting shaft gears and multipliers of train and epicyclic type applied for one or more machine plants with any type of engine, and also for marine auxiliary drives.

These requirements apply to enclosed gears whose gear set is intended to transmit a maximum continuous power equal to, or greater than:

220 kW for gears intended for main propulsion;

110 kW for gears intended for essential auxiliary services.

These requirements, however, may be applied to the enclosed gears, whose gear set is intended to transmit a maximum continuous power less than those specified above at the request of the Register.

4.2.1.2 Epicyclic gear shall be fitted with equalizers. The rim of epicyclic wheel with more than 3 planetary pinions shall be flexible in the radial direction.

4.2.2 Gears.

4.2.2.1 The pinions of main gearing shall be manufactured from alloy steel with the ultimate tensile strength of 620 MPa and above. For auxiliary gears, both constructional steels with lower physical and chemical properties and cast iron, bronze and non-metallic materials may be used.

4.2.2.2 The hardness of pinion teeth shall be at least 15 % greater than that of wheel teeth. This requirement does not apply to surface hardened gears (carburized, nitrided, face-hardened, etc.).

4.2.2.3 Tooth fillet radius shall not be less than $0{,}3m_n$.

4.2.2.4 The strength of teeth and other pinion and wheel elements shall be proved by calculations. These calculations of steel gear teeth for the basic criteria of durability (contact surface endurance and bending endurance) and for depth strength (for gears with chemically and thermally hardened teeth and with a large module) shall be based on the requirements of the Chapter. In some cases, for high loads and speeds a calculation of the scuffing load capacity may be required.

For high power gearing, gears rotating at speeds higher than 30 m/s, epicyclic main propulsion gears and kinematically sophisticated gears specific calculation technique may be permitted, subject to agreement with the Register.

In cases of unique geometry, arrangement or manufacture of the gearing, the Register may permit a departure from the serviceability criteria determined by the formulae to be found in the Chapter on condition relevant calculations or experimental data are submitted as substantiation.

4.2.2.5 Technical documentation on gears to be submitted to the Register shall cover the following parameters:

type of gearing, engine and coupling;

a_p = number of engagements;

load spectrum;

T_1 = torque of pinion at the maximum long-acting load, N·m;

For gears, during the operation of which a possibility exists for an action of instantaneous maximum loads $T_{1\max} > K_A T_1$ with a number of stress reversal cycles not in excess of 10^3 throughout the service period, the maximum torque of pinion at the maximum load, $T_{1\max}$, in N·m, shall be additionally indicated;

n_1 = pinion rotational speed, min^{-1};

m_n = normal module, mm;

Z_1, Z_2 = number of teeth of pinion, wheel;

b_1, b_2 = face width of pinion, wheel, mm;

b_w = active face width, mm;

h_a^* = addendum ref. to module;

c^* = bottom clearance ref. to module;

β = helix angle at reference cylinder, deg.;

α_n = normal pressure angle at reference cylinder, deg.;

x_1, x_2 = addendum modification coefficient of pinion, wheel;

Q = grade of accuracy;

f_f = profile form error in accordance with current standards, μm;

f_{pb} = base pitch error in accordance with current standards, μm;

F_β = total tooth alignment deviation in accordance with current standards, μm;

ρ_{a0} = tip radius of tool, mm;

h_k = buckling height of protuberance profile, mm;

α_0 = protuberance angle, deg.;

d_{a0} = tip diameter of teeth of gear-shaper cutter for manufacturing internal gearing, mm;

Z_0 = number of teeth of gear-shaper cutter;

x_0 = addendum modification coefficient of cutter;

materials of pinion and wheel teeth;

σ_{B1}, σ_{B2} = ultimate tensile strength of tooth core, MPa;

σ_{T1}, σ_{T2} = yield strength of tooth core, MPa;
E_1, E_2 = modulus of elasticity of the pinion and wheel teeth materials, MPa;
ν_1, ν_2 = Poisson's ratio of the pinion and wheel teeth materials;
method of heat treatment of pinion and wheel teeth;
R_{a1}, R_{a2} = arithmetic average roughness of the pinion and wheel contact surface and root fillet, μm;
HV_1, HV_2 = Vickers hardness of the pinion and wheel contact surface;
HB_1, HB_2 = Brinell hardness of the pinion and wheel contact surface;
HB_{c1}, HB_{c2} = Brinell hardness of the pinion and wheel teeth core;
h_{t1}, h_{t2} = depth of core hardness of pinion, wheel, mm;
ν_{40}, ν_{50} = kinematic oil viscosity at 40 °C and 50 °C, mm^2/s.
Besides general parameters, the initial data for bevel gearing shall include:
tooth form in longitudinal section;
$\delta_1(\delta_{w1})$, $\delta_2(\delta_{w2})$ = pitch cone angle, deg.;
m_{te} = outer transverse module, mm;
R_{we} = outer pitch cone distance, mm;
β_m = middle helix angle, deg.

4.2.2.6 The nominal tangential load F_t, in N, is calculated by the equation

$$F_t = \frac{2000T_1}{d_1 a_p},$$

the maximum tangential load $F_{t\,\max}$, in N, is calculated by the equation

$$F_{t\,\max} = 2000T_{1\,\max}/d_1 a_p$$

where for spur and helical gears:

$$d_1 = Z_1 m_t, \quad m_t = m_n/\cos\beta; \qquad (4.2.2.6\text{-}1)$$

for bevel gears:

$$d_1 = d_{m1} = m_{te} Z_1 (1 - 0{,}5 b_1/R_{we}). \qquad (4.2.2.6\text{-}2)$$

4.2.2.7 The gear shall satisfy the conditions of contact tooth surface endurance

$$\sigma_H \leqslant \sigma_{Hp}$$

and tooth bending endurance

$$\sigma_F \leqslant \sigma_{Fp}$$

where for σ_H and σ_F, refer to 4.2.2.7.1, 4.2.2.7.3;
for σ_{Hp} and σ_{Fp}, refer to 4.2.2.7.2, 4.2.2.7.4.

The rated stresses for bevel gearing are determined by formulae for equivalent cylindrical gearing. The parameters of the equivalent gearing for midsection are given in 4.2.2.7.6.

For gears subjected to peak loads the following conditions shall be satisfied:
statical strength of contact tooth surface

$$\sigma_{H\max} \leqslant \sigma_{HP\max}$$

and statical tooth bending strength

$$\sigma_{F\max} \leqslant \sigma_{FP\max}$$

where for $\sigma_{H\max}$ and $\sigma_{F\max}$ refer to 4.2.2.7.1, 4.2.2.7.3;
for $\sigma_{HP\max}$ and $\sigma_{FP\max}$ refer to 4.2.2.7.2, 4.2.2.7.4.

4.2.2.7.1 The rated contact stresses, in MPa, for the pinion and wheel teeth are calculated by the following formula:

$$\sigma_H = \sigma_{H0}\sqrt{K_A K_\gamma K_v K_{H\beta} K_{H\alpha}} \qquad (4.2.2.7.1)$$

where for σ_{HO}, refer to 4.2.2.7.1.1;
for K_A, refer to 4.2.2.7.1.7;
for K_γ , refer to 4.2.2.7.1.8;
for K_v , refer to 4.2.2.7.1.9;
for $K_{H\beta}$, refer to 4.2.2.7.1.10;
for $K_{H\alpha}$, refer to 4.2.2.7.1.11.

The rated maximum contact stresses, in MPa, for the pinion and wheel teeth are calculated by the formula

$$\sigma_{H\max} = \sigma_{HO\max}\sqrt{K_\gamma K_{H\beta} K_{H\alpha}}$$

where $\sigma_{HO\max}$, refer to 4.2.2.7.1.1.

4.2.2.7.1.1 At nominal load, the contact stress for the pinion teeth is calculated by the equation

$$\sigma_{HO1} = Z_K Z_B Z_H Z_E Z_\varepsilon Z_\beta \sqrt{w_t(u \pm 1)/d_1 u} \qquad (4.2.2.7.1.1)$$

For wheel teeth

$$\sigma_{HO_2} = \frac{Z_D}{Z_B}\,\sigma_{HO_1}$$

where $w_t = \frac{F_t}{\tau b_w}$;

τ = 1 for spur gears;
τ = 0,85 for bevel gears;
$u = Z_2/Z_1$=gear ratio;
for Z_1, Z_2 and b_w, refer to 4.2.2.5;
for F_t and d_1, refer to 4.2.2.6;
for Z_B (Z_D), refer to 4.2.2.7.1.2;
for Z_H, refer to 4.2.2.7.1.3;
for Z_E, refer to 4.2.2.7.1.4;
for Z_ε, refer to 4.2.2.7.1.5;
for Z_β, refer to 4.2.2.7.1.6.
Z_K = 1 for spur gears,
Z_K = 0,85 for bevel gears.

In Formula (4.2.2.7.1.1) and later the above sign is for external meshing, the below sign — internal meshing.

The maximum contact stresses at $T_{1\max}$, in MPa, for the pinion teeth are calculated by the formula

$$\sigma_{HO\max 1} = Z_K Z_B Z_H Z_E Z_\varepsilon Z_\beta \sqrt{w_t(u \pm 1)/d_1 u}\ ,$$

for wheel teeth:

$$\sigma_{HO\max 2} = \frac{Z_D}{Z_B}\,\sigma_{HO\max 1}$$

where the parameters involved shall be calculated at $F_t = F_{t\max}$, K_A = 1,0 and K_V = 1,0.

4.2.2.7.1.2 The single-pair mesh factors **зб** АНД Z_D are used for converting contact stresses at the pitch point to contact stresses at the inner point of single-pair contact of a pinion (wheel) and they are determined as follows:

for spur gears,

$$Z_B = M_1 = \frac{\operatorname{tg}\alpha_{tw}}{\sqrt{\left[\sqrt{\left(\frac{d_{a1}}{d_{b1}}\right)^2 - 1} - \frac{2\pi}{Z_1}\right]\left[\sqrt{\left(\frac{d_{a2}}{d_{b2}}\right)^2 - 1} \pm (\varepsilon_\alpha - 1)\frac{2\pi}{Z_2}\right]}}$$

where for ε_α, refer to Formula (4.2.2.7.1.2-11);

if $Z_B < 1$, then $Z_B = 1$;

$$Z_D = M_2 = \frac{\operatorname{tg}\alpha_{tw}}{\sqrt{\left[\sqrt{\left(\frac{d_{a2}}{d_{b2}}\right)^2 - 1} \pm \frac{2\pi}{Z_2}\right]\left[\sqrt{\left(\frac{d_{a1}}{d_{b1}}\right)^2 - 1} - (\varepsilon_\alpha - 1)\frac{2\pi}{Z_1}\right]}}$$

if $Z_D < 1$, then $Z_D = 1$;

for helical gears with $\varepsilon_\beta \geqslant 1$,

$$Z_B = Z_D = 1;$$

if $\varepsilon_\beta < 1$,

$$Z_B = M_1 - \varepsilon_\beta(M_1 - 1) \geqslant 1;$$

$$Z_D = M_2 - \varepsilon_\beta(M_2 - 1) \geqslant 1$$

where for ε_β, refer to Formula (4.2.2.7.1.2-12).

The transverse pressure angle at working pitch cylinder α_{tw} is determined by the equation

$$\operatorname{inv}\alpha_{tw} = \operatorname{inv}\alpha_t + \frac{2(x_2 \pm x_1)\operatorname{tg}\alpha_n}{Z_2 \pm Z_1}$$

where $\operatorname{inv}\alpha = \operatorname{tg}\alpha - \alpha$;

$\alpha_t = \operatorname{arc\,tg}(\operatorname{tg}\alpha_n/\cos\beta)$. (4.2.2.7.1.2-1)

Tip diameters of the pinion and wheel are calculated by the equations:
for external gearing,

$$d_{a1} = d_1 + 2(h_a^* + x_1 - \Delta y)m_n; \quad (4.2.2.7.1.2\text{-}2)$$

$$d_{a2} = d_2 + 2(h_a^* + x_2 - \Delta y)m_n; \quad (4.2.2.7.1.2\text{-}3)$$

for internal gearing,

$$d_{a1} = d_1 + 2(h_a^* + x_1 + \Delta y - \Delta y_{02})m_n; \quad (4.2.2.7.1.2\text{-}4)$$

$$d_{a2} = d_2 - 2(h_a^* - x_2 + \Delta y - k_{x2})m_n. \quad (4.2.2.7.1.2\text{-}5)$$

In this case, for d_1, refer to Formula (4.2.2.6-1)

$d_2 = Z_2 m_t$ (4.2.2.7.1.2-6)

where for m_t, refer to Formula (4.2.2.6-1);

coefficients of displacement:

$$\Delta y = x_2 \pm x_1 - y;$$

$$y = (a_w - a)/m_n$$

where $a_w = a\cos\alpha_t/\cos\alpha_{tw}$; (4.2.2.7.1.2-7)

$$a = 0{,}5(Z_2 \pm Z_1)m_t;$$

coefficients of displacement for cutter and wheel meshing:

$$\Delta y_{02} = x_2 - x_0 - y_{02};$$

$$y_{02} = (a_{w02} - a_{02})/m_n$$

where $a_{w02} = a_{02} \cos \alpha_t / \cos \alpha_{tw02}$; (4.2.2.7.1.2-8)

$a_{02} = 0{,}5(Z_2 - Z_0)m_t$;

$\text{inv}\, \alpha_{tw02} = \text{inv}\, \alpha_t + \dfrac{2(x_2 - x_0)\, \text{tg}\, \alpha_n}{Z_2 - Z_0}$;

with $x_2 \geqslant 2$, $k_{x2} = 0$, and with $x_2 < 2$
$k_{x2} = 0{,}25 - 0{,}125x_2$.

Base diameters of the pinion and wheel:

$$d_{b1} = d_1 \cos \alpha_t; \quad (4.2.2.7.1.2\text{-}9)$$

$$d_{b2} = d_2 \cos \alpha_t. \quad (4.2.2.7.1.2\text{-}10)$$

Transverse contact ratio:

$$\varepsilon_\alpha = \frac{0{,}5\sqrt{d_{a1}^2 - d_{b1}^2} \pm 0{,}5\sqrt{d_{a2}^2 - d_{b2}^2} \pm a_w \sin \alpha_{tw}}{\pi m_t \cos \alpha_t} \quad (4.2.2.7.1.2\text{-}11)$$

and overlap ratio:

$$\varepsilon_\beta = \frac{b_w \sin \beta}{\pi m_n}. \quad (4.2.2.7.1.2\text{-}12)$$

4.2.2.7.1.3 The zone factor, which accounts for the tooth flank curvature, is determined by the following formula:

$$Z_H = \sqrt{\frac{2 \cos \beta_b}{\cos^2 \alpha_t\, \text{tg}\, \alpha_{tw}}}$$

where the helix angle at base cylinder is
$\beta_b = \arcsin(\sin \beta \cos \alpha_n)$.

4.2.2.7.1.4 The elasticity factor, which accounts for the material properties of the pinion and wheel material is, for all cases, equal to

$$Z_E = \sqrt{\frac{1}{\pi\left(\frac{1 - v_1^2}{E_1} + \frac{1 - v_2^2}{E_2}\right)}}.$$

For steel gears ($E_1 = E_2 = 2{,}06 \cdot 10^5$ MPa, $v_1 = v_2 = 0{,}3$)

$$Z_E = 189{,}8 \text{ MPa}^{0{,}5}.$$

4.2.2.7.1.5 The contact ratio factor, which accounts for the total contact line, is determined by the following formulae:

for spur gears,

$$Z_\varepsilon = \sqrt{\frac{4-\varepsilon_\alpha}{3}}; \qquad (4.2.2.7.1.5\text{-}1)$$

for helical gears with $\varepsilon_\beta < 1$,

$$Z_\varepsilon = \sqrt{\frac{4-\varepsilon_\alpha}{3}(1-\varepsilon_\beta) + \frac{\varepsilon_\beta}{\varepsilon_\alpha}}, \qquad (4.2.2.7.1.5\text{-}2)$$

with $\varepsilon_\beta \geqslant 1$,

$$Z_\varepsilon = \sqrt{\frac{1}{\varepsilon_\alpha}}. \qquad (4.2.2.7.1.5\text{-}3)$$

4.2.2.7.1.6 The helix angle factor is
for spur gears:

$$Z_b = \sqrt{\frac{1}{\cos\beta}};$$

for bevel gears:

$$Z_\beta = \sqrt{\cos\beta_m}.$$

4.2.2.7.1.7 The application factor K_A, which accounts for externally generated overloads on the gearing, is chosen from Table 4.2.2.7.1.7 in the absence of special procedures for its determination.

Table 4.2.2.7.1.7

Type of gearing	Engine	Type of coupling on input shaft	K_A	$K_{st\,\max}$
Main propulsion	Electric motor	Any type	1	1,1
	Turbine ICE	Any type	1	1,1
		Hydraulic or equivalent coupling	1	1,1
		High elastic (flexible) coupling	1,3	1,4
		Other types	1,5	1,6
		Any type	1	1,1
Auxiliary	Electric motor	Any type	1	1,1
	Turbine ICE	Hydraulic or equivalent coupling	1	1,1
		High elastic (flexible) coupling	1,2	1,3
		Other types	1,4	1,5

For ships strengthened for ice navigation, the factor K_A for main gearing is determined as a product of $K_A \cdot K'_A$ where K'_A is obtained from Table 4.2.3.2.

The maximum load $T_{1\max}$ shall be determined by one of the following methods:

experimentally;

by dynamic calculation having regard to elastic and dampening characteristics of the system elements, on agreement with the Register;

basing on technical documentation or testing data of devices restricting the limiting value of the torque to be transmitted.

In the absence of the listed data, $T_{1\max}$ value may be determined using the maximum load factor $K_{st\,\max}$ by the formula

$$T_{1\max} = K_{st\,\max} T_{1\max\ eff}$$

where $T_{1\max\ eff}$ = maximum effective torque delivered to the gearing from the engine or actuator (e.g. the maximum torque developed by a driving unit or the windlass shaft torque);
$K_{st\max}$ = maximum load factor obtained from Table 4.2.2.7.1.7.

4.2.2.7.1.8 For multiple-path transmissions, the load sharing factor $K\gamma = 1{,}15$, which accounts for the maldistribution of load among paths, is equal to 1,15. For double helical, high power main propulsion gearing the factor K_γ shall be specified with due regard to the maldistribution of load among helices of the gear. In other cases, $K_\gamma = 1$.

4.2.2.7.1.9 The dynamic factor K_v, shall be determined by the following formulae:

.1 for spur gears and for helical gears with overlap ratio $\varepsilon_\beta \geqslant 1$:

$$K_v = 1 + \left(\frac{K_1}{K_A F_t/b} + K_2\right)\frac{vz_1}{100} K_3 \sqrt{u^2/(1+u^2)}.$$

If $K_A F_t/b < 100$ N/mm, this value is assumed to be equal to 100 N/mm.

Numerical values for the factor K_1 shall be as specified in Table 4.2.2.7.1.9-1.

Table 4.2.2.7.1.9-1

Values of the factor K_1 for the calculation of the factor K_v

	K_1 According to GOST 1643-81 (ISO 1328)					
	3	4	5	6	7	8
Spur gears	2,1	3,9	7,5	14,9	26,8	39,1
Helical gears	1,9	3,5	6,7	13,3	23,9	34,8

For all accuracy grades, the values of the factor K_2 shall be in accordance with the following:
for spur gears, K_2 = 0,0193;
for helical gears, K_2 = 0,0087.
The values of the factor K_3 shall be determined as follows:

$$K_3 = 2{,}0 \text{ if } \frac{vz_1}{100}\sqrt{u^2/(1+u^2)} \leqslant 0{,}2;$$

$$K_3 = 2{,}071 - 0{,}357\frac{vz_1}{100}\sqrt{u^2/(1+u^2)} \text{ if } \frac{vz_1}{100}\sqrt{u^2/(1+u^2)} > 0{,}2;$$

.2 for helical gears with overlap ratio $\varepsilon_\beta < 1$ the value of the factor K_v shall be determined by linear interpolation between values determined for spur gears ($K_{v\alpha}$) and helical gears ($K_{v\beta}$) in accordance with:

$$K_v = K_{v\alpha} - \varepsilon_\beta(K_{v\alpha} - K_{v\beta}) \qquad (4.2.2.7.1.9.2\text{-}1)$$

where $K_{v\alpha} = K_v$ value for spur gears, in accordance with 4.2.2.7.1.9.1;
$K_{v\beta} = K_v$ value for helical gears, in accordance with 4.2.2.7.1.9.1.

This method may be applied only to cases where all the following conditions are satisfied:
running velocity in the subcritical range, i.e.:

$$\frac{vz_1}{100}\sqrt{u^2/(1+u^2)} < 10\text{m/s};$$

spur gears ($\beta = 0°$) and helical gears ($\beta \leqslant 30°$);
pinions with relatively low number of teeth $z_1 < 50$;
solid disc wheels or heavy steel gear rim, and to all types of gears if

$$\frac{vz_1}{100}\sqrt{u^2/(1+u^2)} < 3 \text{ m/s}$$

(as well as to helical gears where $\beta > 30°$).

The factor K_v accounting for the internally generated dynamic loads in case where the pinion speed exceeds 0,85 n_{E1} shall be determined from Table 4.2.2.7.1.9-2.

Table 4.2.2.7.1.9-2

Parameter	Nota-tion	Method of determination
1. Resonance speed of pinion (main resonance) min^{-1}	n_{E1}	$n_{E1}=\frac{30\cdot10^3}{\pi Z_1}\sqrt{\frac{C_\gamma}{m_{red}}}$
.1 tooth mesh stiffness of a gear pair per unit face width N/(mm·μm)	C_γ	from Formula (4.2.2.7.1.10-2)
.2 single tooth mesh stiffness per unit face width N/(mm·μm)	C'	$C'=C_\gamma/(0{,}75\varepsilon_\alpha+0{,}25)$
.3 reduced mass, kg/mm	m_{red}	$m_{red}=\frac{\frac{\theta_1}{(d_{b1}/2)^2}\frac{\theta_2}{(d_{b2}/2)^2}}{\frac{\theta_1}{(d_{b1}/2)^2}+\frac{\theta_2}{(d_{b2}/2)^2}}\cdot\frac{1}{b_w}$, where θ_1 and θ_2 = mass moments of inertia about axis of rotation of the pinion and gear, kg·mm^2. For approximate calculations, the reduced mass may be determined from the formula $m_{red}=3{,}25\cdot10^{-6}\frac{d_2^2}{u^2+1}$ If an additional mass is added to the pinion with a moment of inertia of γ times greater than that of the pinion: $m_{red}=3{,}25\cdot10^{-6}\frac{d_2^2(1+\gamma)}{u^2+1+\gamma}$
2. Relative proximity between actual speed and resonance speed	n_1/n_{E1}	Depending on the ratio n_1/n_{E1} four zones are identified, namely: a) $n_1/n_{E1}<0{,}85$ = subcritical zone determined according to 4.2.2.7.1.9; b) $0{,}85\leqslant n_1/n_{E1}\leqslant1{,}15$ = critical zone determined according to item 3 of this Table; c) $1{,}15<n_1/n_{E1}<1{,}5$ = intermediate zone determined according to item 5 of the Table; d) $n_1/n_{E1}\geqslant1{,}5$ = supercritical zone determined according to item 4 of the Table
3. Factor accounting for the dynamic loads generated in the critical zone	K_v	From the formula $K_v=1+C_{v1}B_p+C_{v2}B_f+C_{v4}B_k$ where C_{v1}, C_{v2} and C_{v4} are de-termined from Table 4.2.2.7.1.9-3
.1 factor accounting for pitch error, running-in and tooth loading influence	B_p	From the formula $B_p=\frac{C'(f_{pb}-y_\alpha)}{(F_t/b_w)K_AK_\gamma}$ where f_{pb} = pitch error (if not specified, the permissible value of f_{pbr} shall be taken), μm; y_α = reduction in pitch error due to runningin, μm, determined according to 4.2.2.7.1.11
.2 factor accounding for profile error, running-in and tooth loading influence	B_f	From the formula $B_f=\frac{C'(f_f-y_\alpha)}{(F_t/b_w)K_AK_\gamma}$ where f_f = profile error (if not specified, the permissible value of f_{fr} shall be taken), μm
.3 factor accounting for tip relief influence	B_k	From the formula $B_k=\left\lvert 1-\frac{C'C_a}{(F_t/b_w)K_AK_\gamma}\right\rvert$ where $C_a=1{,}5+\frac{(\sigma_{Hlim}/97-18{,}45)^2}{18}$ N o t e . If gears are made of different materials

Table 4.2.2.7.1.9-2 — continued

Parameter	Nota-tion	Method of determination
		$C_a = (C_{a_1} + C_{a_2})/2$
4. Factor accounting for dynamic loads generated in the supercritical zone	K_v	From the formula $K_v = C_{v_5}B_p + C_{v_6}B_f + C_{v_7}$ where C_{v_5}, C_{v_6} and C_{v_7} are determined from Tables 4.2.2.7.1.9-3, 4.2.2.7.1.9-4.
5. Factor accounting for dynamic loads generated in the intermediate zone	K_v	K_v is determined by linear interpolation between the values in the critical zone for $n_1 = 1{,}15n_{E1}$ according to item 3 of the Table and in the supercritical zone for $n_1 = 1{,}5n_{E1}$ according to item 5 of the Table. $K_v = K_{v(n_1=1{,}5n_{E1})} + \frac{K_{v(n_1=1{,}15n_{E1})}}{0{,}35}(1{,}5 - \frac{n_1}{n_{E1}}) - \frac{K_{v(n_1=1{,}5n_{E1})}}{0{,}35}(1{,}5 - \frac{n_1}{n_{E1}})$

Table 4.2.2.7.1.9-3

Factor	Total contact ratio	
	$1 < \varepsilon_\gamma \leqslant 2$	$\varepsilon_\gamma > 2$
C_{v1}	0,32	0,32
C_{v2}	0,34	$\frac{0{,}57}{\varepsilon_\gamma - 0{,}30}$
C_{v4}	0,90	$\frac{0{,}57 - 0{,}05\varepsilon_\gamma}{\varepsilon_\gamma - 1{,}44}$
C_{v5}	0,47	0,47
C_{v6}	0,47	$\frac{0{,}12}{\varepsilon_\gamma - 1{,}74}$

Table 4.2.2.7.1.9-4

Factor	Total contact ratio		
	$1 < \varepsilon_\gamma \leqslant 1{,}5$	$1{,}5 < \varepsilon_\gamma < 2{,}5$	$\varepsilon_\gamma \geqslant 2{,}5$
C_{v7}	0,75	$0{,}125\sin[\pi(\varepsilon_\gamma - 2)] + +0{,}875$	1,0

For bevel gears with tangent and circular arc teeth with $\varepsilon_{v\beta} \geqslant 1$ and with straight teeth if

$$v_{mt}\frac{Z_1}{100}\sqrt{u^2/(1 + u^2)} \leqslant 3 \text{ m/s},$$

as well as when the gears are made of steel and they have the width of toothing close to the width of disc, $Z_1 < 50$ and

$$v_{mt}\frac{Z_1}{100}\sqrt{u^2/(1 + u^2)} \leqslant 10 \text{ m/s}$$

where $v_{mt} = \frac{d_{m1}n_1}{19098}$, the values of the factor K_v are determined by the equation

$$K_v = 1 + \left(\frac{K_1K_2}{F_t/b_{eH}K_A} + K_3\right)v_{mt}\frac{Z_1}{100}\sqrt{u^2/(1 + u^2)}. \quad (4.2.2.7.1.9.2\text{-}2)$$

The values of κ_1, K_2 and K_3 shall be obtained from Table 4.2.2.7.1.9-5. Where $F_t/b_{eH}K_A < 100$ N/mm, the value 100 N/mm shall be used.

Table 4.2.2.7.1.9-5

Type of tooth	K_1							K_2	K_3
	Accuracy grade								
	3	4	5	6	7	8	9	3 — 9	
Straight	2,19	3,18	7,49	15,34	27,02	58,43	106,64	1,0645	0,0193
Tangent and circular								1,0000	0,0100

For bevel gears with $\varepsilon_{v\beta} < 1$, the factor K_v is calculated by Formula (4.2.2.7.1.9.2-1) where K_α and K_β are relevant values of K_v determined by Formula (4.2.2.7.1.9.2-2).

4.2.2.7.1.10 The face load distribution factor, which accounts for the effect of non-uniform distribution of load along the face width, is defined as follows

$$K_{H\beta} = 1 + \frac{F_{\beta y} C_\gamma}{2 w_t K_A K \gamma K_v} \qquad (4.2.2.7.10\text{-}1)$$

where $F_{\beta y}$ is in m and C_γ is in N/mm·μm.

$F_{\beta y}$ is estimated by means of the relationships:

$$F_{\beta y} = F_{\beta x} - y_\beta;$$

$$F_{\beta x} = 1{,}33 f_{sh} + f_{ma};$$

$$f_{sh} = f_{sho} w_t K_A K_\gamma K_v.$$

In all cases, f_{sho} accounts for the bending and torsion deformation of pinion and wheel and depends on many factors. If the wheel is placed symmetrically close between the seats,

f_{sho}=2,3$\gamma_H \cdot 10^{-2}$ μm·mm/N for the gearing without helix correction and without end relief;

f_{sho}=1,6$\gamma_H \cdot 10^{-2}$ μm·mm/N for the gearing without helix correction, but with end relief

where $\gamma_H = (bw/d_1)^2$ for the helical and spur gearing;

$\gamma_H = 3(bw/2d_1)^2$ for the double helical gearing (b_w is the total active face width).

For the gearings with helix correction, the following minimum values shall be applied:

f_{sho}=5·10^{-3} μm·mm/N for the spur gearing;

f_{sho}=1,3·10^{-2} μm·mm/N for the helical gearing;

the last values of f_{sho} are minimum design values for all cases.

For all the types of gearing without helix correction:

$$f_{ma} = 2F_\beta/3,$$

but for the gearing with helix correction:

$$f_{ma} = F_\beta/3$$

where F_β = the greatest value of $F_{\beta 1}$ and $F_{\beta 2}$ for pinion and wheel respectively.

In the case of contact of steel through-hardened teeth and the contact of surface hardened with through-hardened teeth:

$$y_\beta = \frac{320}{\sigma_{Hlim}} F_{\beta x}$$

(for σ_{Hlim}, refer to 4.2.2.7.2.1).

If $v \leqslant 5$ m/s, the maximum value of y_β is not limited.

With 5 m/s < $v \leqslant$ 10 m/s,

$$y_\beta \leqslant \frac{25800}{\sigma_{Hlim}} .$$

When v > 10 m/s,

$$y_\beta \leqslant \frac{12800}{\sigma_{Hlim}} .$$

For surface-hardened and nitrided teeth,

$$y_\beta = 0{,}15 F_{\beta x} .$$

At any speed y_β shall not exceed 6 μm.

If the pinion and wheel teeth are surface-hardened by different procedures,

$$y_\beta = 0{,}5(y_{\beta 1} + y_{\beta 2})$$

where $y\beta_1$ and $y\beta_2$ are the values for pinion and wheel, respectively.

The tooth mesh stiffness of a gear pair is calculated by the following formula:

$$C_\gamma = \frac{(1+3\varepsilon_\alpha)}{q'} C_{BS} \cos\beta$$

where

$$C_{BS} = [1 + 0{,}5(0{,}2 - c^*)][1 - 0{,}02(20 - \alpha_n)];$$

$$q' = 0{,}23615 + \frac{0{,}7755}{Z_{v1}} + \frac{1{,}28955}{Z_{v2}} - 0{,}03175x_1 - \frac{0{,}5827x_1}{Z_{v1}} - 0{,}00965x_2 - \frac{1{,}2094x_2}{Z_{v2}} + 0{,}02645x_1^2 + 0{,}0091x_2^2;$$

$$Z_{v1} = \frac{Z_1}{\cos^2\beta_b \cos\beta}; \; Z_{v2} = \frac{Z_2 Z_{v1}}{Z_1}. \qquad (4.2.2.7.1.10\text{-}2)$$

For the internal gearing, $Z_{v2} = \infty$.

If $(F_t/b_w)K_A < 100$ N/mm,

$$\text{then } C_\gamma = \frac{(1+3\varepsilon_\alpha)}{q'} C_{BS} \cos\beta \frac{(F_t/b_w)K_A}{100} .$$

For the cylindrical helical gears, by virtue of polar stress concentration (variability of stiffness along the contact line) $K_{H\beta} \geqslant 1{,}2$ shall apply.

For bevel gears, the factor $K_{H\beta}$ shall be determined by the following formula:

$$K_{H\beta} = 1{,}5 K_{H\beta be},$$

in view of high pressure upon the working surface of teeth

where for $K_{H\beta be}$, refer to Table 4.2.2.7.1.10.

Table 4.2.2.7.1.10

Neither pinion nor wheel overhung when mounted	One of the wheels overhung when mounted, other between seats	Both pinion and wheel overhung when mounted
1,1	1,2	1,5

4.2.2.7.1.11 The transverse load distribution factor $K_{H\alpha}$, for the simultaneously contacting teeth paris may be determined by one of the formulae:

with $\varepsilon_\gamma \leqslant 2$,

$$K_{H\alpha} = \varepsilon_\alpha(0{,}45 + K_4); \qquad (4.2.2.7.1.11\text{-}1)$$

with $\varepsilon_\gamma > 2$,

$$K_{H\alpha} = 0{,}9 + 2K_4\sqrt{\frac{2(\varepsilon_\gamma - 1)}{\varepsilon_\gamma}} \qquad (4.2.2.7.1.11\text{-}2)$$

where $K_4 = \dfrac{C_\gamma(f_{pb} - y_\alpha)}{5w_{tH}}$;

$w_{tH} = w_t K_A K_\gamma K_v K_{H\beta}$;

f_{pb} is equal to the maximum of f_{pb1} or f_{pb2} for the pinion and wheel, respectively; if $f_{pb} < f_f$, f_{pb} is substituted by the maximum value of f_{f1} or f_{f2}; for gears with tip relief, $0{,}5f_{pb}$ can be introduced,

$$\varepsilon_\gamma = \varepsilon_\alpha + \varepsilon_\beta \qquad (4.2.2.7.1.11\text{-}3)$$

where for ε_α, refer to Formula (4.2.2.7.1.2-11);
for ε_α, refer to Formula (4.2.2.7.1.2-12).

For through-hardened teeth,

$$y_\alpha = \frac{160}{\sigma_{Hlim}} f_{pb}.$$

With $v \leqslant 5$ m/s, the maximum value of y_α is not limited.

If 5 m/s$<v\leqslant 10$ m/s, the maximum value is limited by the condition

$$y_\alpha \leqslant \frac{12800}{\sigma_{Hlim}};$$

with $v > 10$ m/s,

$$y_\alpha \leqslant \frac{6400}{\sigma_{Hlim}}.$$

For surface-hardened or nitrided teeth,

$$y_\alpha = 0{,}075 f_{pb}.$$

At any speed y_α shall not exceed 3 μm.

If the pinion and wheel teeth are surface-hardened by different procedures:

$$y_\alpha = 0{,}5(y_{\alpha 1} + y_{\alpha 2})$$

where $y_{\alpha 1}$ is for the pinion and $y_{\alpha 2}$ — for the wheel.

The rated values of $\boldsymbol{\kappa}_{\mathbf{x}\alpha}$ are limited by the condition

$$1 \leqslant K_{H\alpha} \leqslant \frac{\varepsilon_\gamma}{\varepsilon_\alpha Z_\varepsilon^2}$$

where ε_γ is determined by Formula (4.2.2.7.1.11-3);
Z_ε is determined by one of Formulae (4.2.2.7.1.5-1 to 4.2.2.7.1.5-3).

4.2.2.7.2 The permissible contact stresses for pinion and wheel are determined by the following formula:

$$\sigma_{Hp} = \frac{\sigma_{Hlim} Z_N}{S_{H\min}} Z_L Z_v Z_R Z_W Z_X \qquad (4.2.2.7.2)$$

where for σ_{Hlim}, refer to 4.2.2.7.2.1;
for Z_N, refer to 4.2.2.7.2.2;
for $S_{H\min}$, refer to 4.2.2.7.2.3;
for Z_L, refer to 4.2.2.7.2.4;

for Z_v, refer to 4.2.2.7.2.5;
for Z_R, refer to 4.2.2.7.2.6;
for Z_W, refer to 4.2.2.7.2.7;
for Z_X, refer to 4.2.2.7.2.8.

The permissible contact stresses at maximum load are determined by the following formula:

$$\sigma_{HP\max} = \frac{\sigma_{Hlim} Z_N}{S_{HST}} Z_W$$

where for S_{HST}, refer to 4.2.2.7.2.3.

4.2.2.7.2.1 In the absence of test results, the endurance limits for contact stress σ_{Hlim} shall be taken from Table 4.2.2.7.2.1.

Table 4.2.2.7.2.1

Thermal or chemical and thermal treatment of teeth		σ_{Hlim}, MPa
Pinion	Wheel	
Through-hardened	Through-hardened	$0{,}46\sigma_{B2} + 255$
Surface-hardened		$0{,}42\sigma_{B2} + 415$
Carburized, induction-hardened or nitrided	Soft-bath nitrided	1000
	Induction-hardened	$0{,}88HV_2 + 675$
Carburized or nitrided	Nitrided	1300
Carburized		1500
Note. With the number of cycles of at least $5 \cdot 10^7$, the values of σ_{Hlim} correspond to a failure probability of 1 % or less. The criterion, which accounts for σ_{Hlim}, is the pitting damage of not less than 2 % for the total active flank area without surface-hardening and not less than 5 % for that with surface-hardening.		

4.2.2.7.2.2 For ahead running, the life factor $Z_N = 1$.

For astern running and in other cases of a limited life Z_N is recommended to take as 1,1.

At the maximum load $T_{1\max}$, the life factor Z_N is equal to:

1,6 — for through-hardened or surface-hardened steel;

1,3 — for gas-nitrided steel;

1,1 — for bath-nitrided steel.

4.2.2.7.2.3 The minimum safety factors for contact stress $S_{H\min}$, for bending stress $S_{F\min}$, for static strength of contact teeth surfaces S_{HST} and for bending teeth strength S_{FST} are taken from Table 4.2.2.7.2.3.

4.2.2.7.2.4 The lubricant factor, which accounts for the effect of lubricant viscosity, is determined by one of the formulae:

$$Z_L = C_{ZL} + \frac{1 - C_{ZL}}{\left(0{,}6 + \frac{40}{v_{50}}\right)^2}$$

or

$$Z_L = C_{ZL} + \frac{1 - C_{ZL}}{\left(0{,}6 + \frac{67}{v_{40}}\right)^2}.$$

With 850 MPa $\leqslant \sigma_{Hlim} \leqslant$ 1200 MPa,

$$C_{ZL} = 0{,}83 + 0{,}08\left(\frac{\sigma_{Hlim} - 850}{350}\right).$$

4.2.2.7.2.5 The speed factor, which accounts for the linear speed effect, is determined by the following formula:

Table 4.2.2.7.2.3

Type of gearing	Type of ship	$S_{H\min}$	$S_{F\min}$	S_{HST}[1]	S_{FST}[1]
Main propulsion	All ships except pleasure craft	1,35	1,7	1,35	1,7
	Single-screw pleasure craft	1,25	1,5	1,25	1,5
Auxiliary	Multiple-screw pleasure craft	1,2	1,45	1,2	1,45
	All ships	1,15	1,4	$1,1 \div 1,35$[2]	$1,4 \div 1,7$[2]

[1]For forged or hot rolled steel wheels. For rolled blanks these values shall be increased by 15 %, for castings — by 30 %.
[2]The maximum values for gearing, the failure of which could have grave consequences.
Note. By pleasure craft are meant ships up to 24 m in length not engaged in trade and passenger carriage or not intended for charter service.

$$Z_v = C_{Zv} + \frac{1 - C_{Zv}}{\sqrt{0,2 + 8/v}}.$$

Within the range 850 MPa $\leqslant \sigma_{Hlim} \leqslant$ 1200 MPa,

$$C_{Zv} = C_{ZL} + 0,02.$$

4.2.2.7.2.6 The roughness factor accounting for the effects of surface roughness is determined by the following formula:

$$Z_R = \left(\frac{3}{R_{Z100}}\right)^{C_{ZR}}.$$

The condition $Z_R \leqslant 1,15$ shall be considered.

R_{Z100} is determined by means of equations:

$$R_{Z100} = R_Z \sqrt[3]{100/a_w};$$

$$R_Z \simeq 6\ R_a;$$

$$R_a = 0,5(R_{a1} + R_{a2}).$$

If 850 MPa $\leqslant \sigma_{Hlim} \leqslant$ 1200 MPa,

$$C_{ZR} = 0,12 + \frac{1000 - \sigma_{Hlim}}{5000}.$$

If σ_{Hlim}<850 MPa, $C_{ZL} = 0,83$; $C_{ZV} = 0,85$; $C_{ZR} = 0,15$ and if $\sigma_{Hlim} >$ 1200 MPa, $C_{ZL} = 0,91$; $C_{ZV} = 0,93$; $C_{ZR} = 0,08$.

4.2.2.7.2.7 The hardness ratio factor, which accounts for the increase of surface durability of teeth of lower hardness when meshing with surface-hardened smooth teeth (R_Z < 6 μm), is determined by the following formula:

.1 surface-hardened pinions with through-hardened wheels:

$Z_w = 1,2(3/R_{zH})^{0,15}$ если $HB < 130$,

$$Z_w = (1,2 - \frac{HB - 130}{1700})(3/R_{zH})^{0,15} \text{ if } 130 \leqslant HB \leqslant 470$$

$Z_w = (3/R_{zH})^{0,15}$ if $HB > 470$

where HB = Brinell hardness of the tooth flanks of the softer gear of the pair;
R_{zH} = equivalent roughness, μm;

$$R_{zH} = \frac{R_{z1}(10/\rho_{red})^{0,33}(R_{z1}/R_{z2})^{0,66}}{(v\nu_{40}/1500)^{0,33}};$$

ρ_{red} = relative radius of curvature;
$\rho_{red} = \rho_1\rho_2/(\rho_1+\rho_2)$, $\rho_{1,2} = 0{,}5d_{b1,2}\text{tg}\alpha tw$;

.2 through-hardened pinions and wheels:

when the pinion is substantially harder than the wheel, the work hardening effect increases the load capacity of the wheel flanks. The factor Z_W applies to the wheel only:

$Z_W = 1$ if $HB_1/HB_2 < 1{,}2$;

$Z_W = 1+(0{,}00898HB_1/HB_2 - 0{,}00829)(u-1)$ if

$$1{,}2 \leqslant HB_1/HB_2 \leqslant 1{,}7;$$

$Z_W = 1+0{,}00698(u-1)$ if $HB_1/HB_2 > 1{,}7$.

If gear ratio $u > 20$, then the value $u = 20$ shall be used.

In any case, if calculated $Z_w < 1$ then the value $Z_w = 1$ shall be used.

4.2.2.7.2.8 The size factor Z_X, which accounts for the effect of tooth size, is chosen from Table 4.2.2.7.2.8.

Table 4.2.2.7.2.8

Thermal or chemical and thermal treatment of pinion teeth	Module m_n, mm	Z_X
Carburizing or surface-hardening	$m_n \leqslant 10$ $10 < m_n < 30$ $m_n \geqslant 30$	1 $1{,}05-0{,}005m_n$ 0,9
Nitriding	$m_n \leqslant 7{,}5$ $7{,}5 < m_n < 30$ $m_n \geqslant 30$	1 $1{,}08-0{,}011m_n$ 0,75
Through-hardening	—	1

4.2.2.7.3 The rated values of bending stress in the critical section, in MPa, are calculated separately for the pinion teeth and wheel teeth by the following formula:

$$\sigma_F = \sigma_{F0}K_AK_\gamma K_vK_{F\beta}K_{F\alpha} \qquad (4.2.2.7.3)$$

where for σ_{F0}, refer to 4.2.2.7.3.1;
for K_A, refer to 4.2.2.7.1.7;
for $K\gamma$, refer to 4.2.2.7.1.8;
for K_v, refer to 4.2.2.7.1.9;
for $K_{F\beta}$, refer to 4.2.2.7.3.5;
for $K_{F\alpha}$, refer to 4.2.2.7.3.6.

The rated values of maximum bending stresses $\sigma_{F\max}$, in MPa, are calculated separately for the pinion teeth and wheel teeth by the following formula:

$$\sigma_{F\max} = \sigma_{F0\max}K_\gamma K_{F\beta}H_{F\alpha}$$

where for $\sigma_{F0\max}$, refer to 4.2.2.7.3.1.

4.2.2.7.3.1 Bending stress under nominal loading:

$$\sigma_{F0} = \frac{F_t}{\tau b m_n} Y_F Y_S Y_\beta Y_B Y_{DT} \qquad (4.2.2.7.3.1)$$

where for b and m_n, refer to 4.2.2.5;
for F_t, refer to 4.2.2.6;
for τ, refer to 4.2.2.7.1.1;
for Y_F, refer to 4.2.2.7.3.2;
for Y_S, refer to 4.2.2.7.3.3;
for Y_β, refer to 4.2.2.7.3.4;

Y_B = rim thickness factor, refer to 4.2.2.7.3.8;
Y_{DT} = deep tooth factor, refer to 4.2.2.7.3.9.

The maximum bending stresses at $T_{1\max}$, in MPa, are calculated separately for the pinion teeth and wheel teeth by the following formula:

$$\sigma_{F0\max} = \frac{F_{t\max}}{\tau b m_n} Y_F Y_S Y_\beta.$$

The values of the parameters involved shall be determined at $F_t = F_{t\max}$, K_A=1,0 and K_V=1,0.

4.2.2.7.3.2 The tooth form factor applied to the external gears, for $\alpha_{\mathbf{H}} \leqslant 25^\circ$ and $\beta \leqslant 30^\circ$ is calculated by the formula

$$Y_F = \frac{6h_F^* \cos\alpha_{en}}{(S_{Fn}^*)^2 \cos\alpha_n}$$

where for $h_F^* = h_{Fe}/m_n$, $S_{Fn}^* = S_{Fn}/m_n$;
for h_{Fe}, S_{Fn}, α_{en}, refer to Fig. 4.2.2.7.3.2-1.

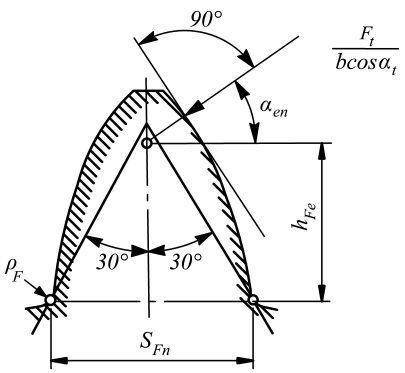

Fig. 4.2.2.7.3.2-1 Illustration to the definition of Y_F for external tooth

To determine h_F^* and S_{Fn}^* the following equation shall be used:

$$p_{bt} = \pi m_t \cos\alpha_t$$

where α_t is determined by Formula (4.2.2.7.1.2-1);

$$d_e = 2\sqrt{[p_{bt}(1-\varepsilon_\alpha) + 0{,}5\sqrt{d_a^2 - d_b^2}]^2 + (0{,}5 d_b)^2}$$

where ε_α is determined by Formula (4.2.2.7.1.2-11);
d_a and d_b for the pinion are determined by Formulae (4.2.2.7.1.2-2), (4.2.2.7.1.2-9) and for the wheel, from Formulae (4.2.2.7.1.2-3), (4.2.2.7.1.2-10);

$$\alpha_e = \arccos(d_b/d_e);$$

$$\gamma_e = \frac{1}{Z}\left(\frac{\pi}{2} + 2x\,\mathrm{tg}\,\alpha_n + 2x_{sm}\right) + \mathrm{inv}\,\alpha_t - \mathrm{inv}\,\alpha_e;$$

$$\alpha_{et} = \alpha_e - \gamma_e;$$

$$G = \rho_{a0}^* - h_{a0}^* + x$$

where $\rho_{a0}^* = \rho_{a0}/m_n$, $h_{a0}^* = h_{a0}/m_n = h_a^* + c^*$;

for ρ_{a0} and h_{a0}, refer to Figs. 4.2.2.7.3.2-2, 4.2.2.7.3.2-3;
x_{sm} is equal to zero for cylindrical gears, as to bevel gears, refer to 4.2.2.7.6;

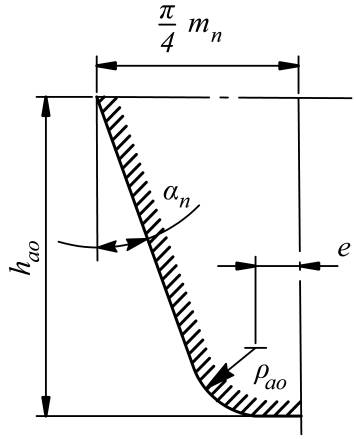

Fig. 4.2.2.7.3.2-2 Non-protuberance hob

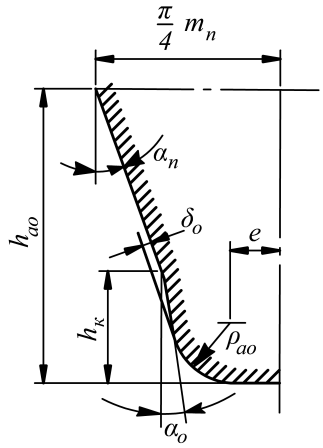

Fig. 4.2.2.7.3.2-3 Protuberance hob

$$e = \frac{\pi}{4} m_n - m_n x_{sm} - h_{a0} \operatorname{tg} \alpha_n + h_k (\operatorname{tg} \alpha_n - \operatorname{tg} \alpha_0) - \frac{(1 - \sin \alpha_0)}{\cos \alpha_0} \rho_{a0}$$

where for h_k and a_0, refer to Fig. 4.2.2.7.3.2-3;

when the tool has no protuberance,

$$h_k = 0, \ \alpha_0 = \alpha_n;$$

$$H = \frac{2}{Z_v} \left(\frac{\pi}{2} - \frac{e}{m_n} \right) - \frac{\pi}{3}$$

where Z_v is determined by Formula (4.2.2.7.1.10-2);

$$\psi = \frac{2G}{Z_v} \operatorname{tg} \psi - H;$$

when solving this equation as an approximation take $\psi = \pi/6$;

$$\beta_e = \operatorname{arctg} \left(\frac{d_b}{d \cos \alpha_{et}} \operatorname{tg} \beta \right)$$

where d for the pinion is determined by Formula (4.2.2.6-1)
and for the wheel, by Formula (4.2.2.7.1.2-6);

$$\alpha_{en} = \operatorname{arctg} (\operatorname{tg} \alpha_{et} \cos \beta_e);$$

$$S^*_{Fn} = Z_v \sin(\pi/3 - \psi) + \sqrt{3}(\frac{G}{\cos\psi} - \rho^*_{a0});$$

$$h^*_F = \frac{1}{2}\{\frac{Z}{\cos\beta}(\frac{\cos\alpha_t}{\cos\alpha_{et}} - 1) + Z_v[1 - \cos(\frac{\pi}{3} - \psi)] - \frac{G}{\cos\psi} + \rho^*_{a0}\}.$$

In the case of internal gearing,

$$Y_F = \frac{6h^*_{F_2}\cos\alpha_{en}}{(S^*_{Fn_2})^2\cos\alpha_n}.$$

To determine $h^*_{F_2} = h_{F_2}/m_n$ and $S^*_{Fn_2} = S_{Fn_2}/m_n$
(for h_{F_2} and S_{Fn_2}, refer to Fig. 4.2.2.7.3.2-4), the following equations are calculated:

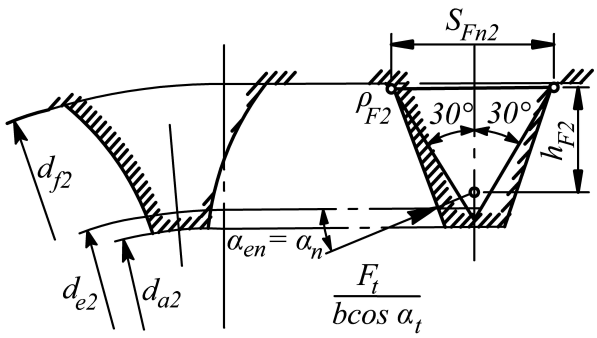

Fig. 4.2.2.7.3.2-4 Illustration to the definition of Y_F *for internal tooth*

$$d_{f_2} = 2a_{w02} + d_{a_0}$$

where a_{w02} is determined by Formula (4.2.2.7.1.2-8);

$$h^*_{a_{02}} = h_{a_{02}}/m_n = (d_{f_2} - d_2)/2m_n;$$

$$c = 0{,}5(d_{f_2} - d_{a_1}) - a_w$$

where d_{a1} is determined by Formula (4.2.2.7.1.2-4);
a_w is determined by Formula (4.2.2.7.1.2-7);

$$\rho^*_{a_{02}} = \frac{c}{m_n(1 - \sin\alpha_n)};$$

$$d_{e_2} = 2\sqrt{[-p_{bt}(1 - \varepsilon_\alpha) + 0{,}5\sqrt{d^2_{a_2} - d^2_{b_2}}]^2 + (0{,}5d_{b_2})^2}$$

where d_{a2} is determined by Formula (4.2.2.7.1.2-5);

$$h^*_{F_2} = \frac{d^*_{f_2} - d^*_{e_2}}{2\cos^2 a_n} - (\frac{\pi}{4} + h^*_{a_{02}}\operatorname{tg}\alpha_n)\operatorname{tg}\alpha_n - 0{,}5\rho^*_{a_{02}};$$

$$S^*_{Fn_2} = \frac{2(\rho^*_{a_{02}} - \delta^*_0)}{\cos\alpha_n} + 2(h^*_{a_{02}} - \rho^*_{a_{02}})\operatorname{tg}\alpha_n - \sqrt{3}\rho^*_{a_{02}} + 0{,}5\pi$$

where $d^*_{f_2} = d_{f_2}/m_n$, $d^*_{e_2} = d_{e_2}/m_n$, $\delta^*_0 = \delta_0/m_n$;

$$\delta_0 = [\frac{h_k - \rho_{a0}(1 - \sin\alpha_0)}{\cos\alpha_0}]\sin(\alpha_n - \alpha_0),$$

refer to Fig. 4.2.2.7.3.2-3.

If $\alpha_n = 20°$,

$$h^*_{F_2} = 0{,}56624(d^*_{f_2} - d^*_{e_2}) - 0{,}13247h^*_{a_{02}} - 0{,}5\rho^*_{a_{02}} - 0{,}28586;$$

$$S^*_{Fn_2} = 0{,}72794h^*_{a_{02}} - 0{,}33163\rho^*_{a_{02}} + 0{,}93969\delta^*_0 + 1{,}5708.$$

4.2.2.7.3.3 The stress correction factor, which accounts for stress concentration, is determined by the following formula:

$$Y_S = (1{,}2 + 0{,}13L)q_s^{\left(\frac{1}{1{,}21 + 2{,}3/L}\right)}.$$

In the case of external gearing,

$$L = \frac{S^*_{Fn}}{h^*_F};$$

$$q_s = \frac{S^*_{Fn}}{2\rho^*_F} \qquad (4.2.2.7.3.3\text{-}1)$$

where

$$\rho^*_F = \rho^*_{a_0} + \frac{2G^2}{(Z_v\cos^2\psi - 2G)\cos\psi}.$$

In the case of internal gearing,

$$L = \frac{S^*_{Fn_2}}{h^*_{F_2}};$$

$$q_s = \frac{S^*_{Fn_2}}{\rho^*_{a_{02}}}. \qquad (4.2.2.7.3.3\text{-}2)$$

In case of external and internal gearing the following condition shall be met:

$$1 \leqslant q_s < 8.$$

For equivalent cylindrical gears of bevel gearing, the expression $Y_{FA}Y_{SA}Y_\varepsilon$ shall be substituted for the product Y_FY_S in Formula (4.2.2.7.3.1) where Y_{FA} and Y_{SA} are determined on the basis of relationships valid for Y_F and Y_S, in which the index e at the parameters is replaced by the index a corresponding to the pressure angle in case of load application to the tooth tip; $Y_\varepsilon = 0{,}25 + 0{,}75/\varepsilon_{v\alpha}$. For standard basic racks, Y_{FA} and Y_{SA} may be determined on the basis of special diagrams.

4.2.2.7.3.4 The helix angle factor is determined as follows:

$$Y_\beta = 1 - \varepsilon_\beta \frac{\beta}{120}$$

where for ε_β, refer to Formula (4.2.2.7.1.2-12);
β is in degrees; if $\varepsilon_\beta > 1$, then $\varepsilon_\beta = 1$ shall be introduced.

The minimum value of Y_β is limited by the condition

$$Y_\beta = 1 - 0{,}25\varepsilon_\beta \geqslant 0{,}75.$$

4.2.2.7.3.5 The factor $K_{F\beta}$ is determined by the relationship

$$K_{F\beta} = (K_{H\beta})^N$$

where $K_{H\beta}$ is determined by Formula (4.2.2.7.1.10-1);

$$N = \frac{(b/h)^2}{1 + b/h + (b/h)^2}. \qquad (4.2.2.7.3.5)$$

The lowest value of b_1/h and b_2/h is taken when solving Formula (4.2.2.7.3.5), and in the case of double helical gears, $b/2$ shall be substituted for b;

$h=(2h_a^*+c^*)m_n-\Delta y m_n$ is the tooth depth. When $b/h<3$, the value b/h=3 shall be used.

For cylindrical gears with end relief and crowning and for bevel gears, N = 1 shall be used.

4.2.2.7.3.6 The design values of $K_{F\alpha}=K_{H\alpha}$ shall satisfy the condition

$$1 \leqslant K_{F\alpha} \leqslant \frac{\varepsilon_\gamma}{0{,}25\varepsilon_\alpha+0{,}75}\ .$$

$K_{H\alpha}$ shall be determined either by Formula (4.2.2.7.1.11-1) or (4.2.2.7.1.11-2).

4.2.2.7.3.7 Where gear-cutting tools other than standard tools are used, it is recommended that the parameters S_{Fn}, ρ_F and h_{Fe} be determined using the actual tooth profile.

4.2.2.7.3.8 The rim thickness factor, Y_B, is a simplified factor used to de-rate thin rimmed gears and shall be determined:

.1 for external gears:

$Y_B=1$ if $s_R/h \geqslant 1{,}2$,

$Y_B=1{,}6\cdot\ln(2{,}242h/s_R)$ if $0{,}5<s_R/h<1{,}2$

where s_R = rim thickness of external gears, in mm;
h = tooth height, in mm.

The case $s_R/h \leqslant 0{,}5$ shall be avoided.

.2 for internal gears:

$Y_B=1$ if $s_R/m_n \geqslant 3{,}5$

$Y_B=1{,}15\ln(8{,}324m_n/s_R)$ if $1{,}75<s_R/m_n<3{,}5$

where s_R= rim thickness of internal gears, in mm.

The case $s_R/m_n \leqslant 1{,}75$ shall be avoided.

For critically loaded applications, this method shall be replaced by a more comprehensive analysis.

4.2.2.7.3.9 The deep tooth factor Y_{DT} adjusts the tooth root stress to take into account high precision gears and contact ratios within the range of virtual contact ratio

$$2{,}05 \leqslant \varepsilon_{\alpha n} \leqslant 2{,}5$$

where $\varepsilon_{\alpha n}=\varepsilon_\alpha/\cos^2\beta_b$.

The factor Y_{DT} shall be determined:

.1 if accuracy grade $Q \leqslant 4$ and $\varepsilon_{\alpha n}>2{,}5$,

$$Y_{DT}=0{,}7;$$

.2 if accuracy grade $Q \leqslant 4$ and $2{,}05<\varepsilon_{\alpha n} \leqslant 2{,}5$,

$$Y_{DT}=2{,}366-0{,}66\varepsilon_{\alpha n};$$

.3 in all other cases $Y_{DT}=1{,}0$.

4.2.2.7.4 The permissible bending stresses for the pinion and wheel teeth are calculated separately by the formula

$$\sigma_{Fp}=\frac{\sigma_{Flim}Y_{ST}Y_N}{S_{F\min}Y_D}\ Y_{\delta relT}Y_{RrelT}Y_X \qquad (4.2.2.7.4)$$

where for σ_{Flim}, refer to 4.2.2.7.4.1;
for Y_{ST}, refer to 4.2.2.7.4.2;
for Y_N, refer to 4.2.2.7.4.3;
for Y_D, refer to 4.2.2.7.4.4;

for $Y_{\delta relT}$, refer to 4.2.2.7.4.5;
for Y_{RrelT}, refer to 4.2.2.7.4.6;
for Y_x, refer to 4.2.2.7.4.7;
for $S_{F\min}$, refer to 4.2.2.7.2.3.

The permissible bending stresses for the pinion and wheel teeth under the maximum load are calculated by the formula

$$\sigma_{FP\max} = \frac{\sigma_{Flim} Y_{ST} Y_N}{S_{FST} Y_D} Y_{\delta relT}.$$

4.2.2.7.4.1 In the absence of test data, the values of endurance limit of teeth in bending are taken from Table 4.2.2.7.4.1.

Table 4.2.2.7.4.1

Thermal or chemical and thermal treatment of teeth	σ_{Flim}, in MPa	Y_N
Through hardened carbon steel	$0{,}09\sigma_B + 150$	2,5
Through hardened alloy steel	$0{,}1\sigma_B + 185$	2,5
Soft-bath nitrided steel	330	1,2
Surface hardened steel	$0{,}35HV + 125$	2,5
Gas nitrided steel	390	1,6
Cr, Ni and Mo carburized steel	450	2,5
Other carburized steel	410	2,5

Note. The values of σ_{Flim} are determined during the bending endurance test of wheel teeth under unidirectional pulsating stress with a minimum stress of zero and they correspond to a failure probability of 1 % or less with the number of cycles 3×10^6.

4.2.2.7.4.2 The factor:

$$Y_{ST} = \sigma_{FE}/\sigma_{Flim} = 2$$

where σ_{FE} is the tooth material bending endurance limit under the unidirectional pulsating stress with a minimum stress of zero.

4.2.2.7.4.3 For basic ratings, the life factor $Y_N = 1$.

For limited life (when running astern, for instance), $Y_N > 1$ may be permitted on agreement with the Register.

For the maximum load $T_{1\max}$ condition, the values of Y_N are given in Table 4.2.2.7.4.1.

4.2.2.7.4.4 The values of the factor Y_D are adopted as follows:

for idler gears, Y_D=1,5;

for gears with occasional part load in the reverse direction, Y_D=1,1;

for gears (except idler gears) with shrink-fitted gear rings, Y_D=1,25,

or if the shrink diameter d_s and radial pressure p_r on the shrinkage surface are known,

$$Y_D = 1 + \frac{0{,}2 d_s^2 \; d p_r b}{F_t \sigma_{Flim} (d_f^2 - d_s^2)}$$

where d and d_f = reference diameter and root diameter of the wheel;

in other cases, Y_D = 1.

4.2.2.7.4.5 The relative notch sensitivity factor $Y_{\delta relT}$ taking into consideration the material sensitivity to stress concentrations is taken from Table 4.2.2.7.4.5.

4.2.2.7.4.6 The relative surface condition factor Y_{RrelT}, which considers the influence of the transition surface roughness of the tooth, is taken from Table 4.2.2.7.4.6.

4.2.2.7.4.7 The size factor Y_X, which considers the influence of teeth size, is taken from Table 4.2.2.7.4.7.

The minimum value of bending endurance margin factor is chosen from Table 4.2.2.7.2.3.

Table 4.2.2.7.4.5

Thermal or chemical and thermal treatment of transition tooth surfaces	$Y_{\delta rel T}$		$Y_{\delta rel T}$ at T_{1max}
	$Y_{\delta rel T}=\dfrac{1+\sqrt{0{,}2p'(1+2q_s)}}{1+\sqrt{1{,}2p'}}$		
	σ_T, MPa	p'	
Through-hardened carbon steel: forgings or rolled steelcasting	500 600	0,0281 0,0194	0,0030 0,1005 $1+(Y_S-2)\times(0{,}5-0{,}00015\sigma_T)$ $0{,}86+0{,}07Y_S$
Surface hardening	800	0,0064	$0{,}4+0{,}3Y_S$
Nitriding	1000	0,0014	$0{,}6+0{,}2Y_S$

Note. The value of q_s is determined either by Formula (4.2.2.7.3.3-1) or (4.2.2.7.3.3-2) depending on the type of gearing. For the range $1{,}5<q_s<4$, may be taken to be $Y_{\delta rel T}=1$.

Table 4.2.2.7.4.6

Thermal or chemical and thermal treatment of teeth	$Y_{R rel T}$	
	$R_Z<1$	$1\leqslant R_Z\leqslant 40$
Through- or surface- hardening, carburizing	1,12	$1{,}674-0{,}529(R_Z+1)^{0{,}1}$
Nitriding	1,025	$4{,}299-3{,}259(R_Z+1)^{0{,}0058}$

Table 4.2.2.7.4.7

Thermal or chemical and thermal treatment of teeth	Module m_n, mm	Y_X
Through-hardening	$5<m_n<30$ $m_n\geqslant 30$	$1{,}03-0{,}006m_n$ 0,85
Surface-hardening	$5<m_n<25$ $m_n\geqslant 25$	$1{,}05-0{,}01m_n$ 0,80

Note. With $m_n\leqslant 5$ and any kind of surface hardening, $Y_X=1$.

4.2.2.7.5 The rated values of safety factors for contact stress and tooth root bending stress of the pinion and wheel teeth shall satisfy the conditions:

$$S_H=\frac{\sigma_{Hlim}Z_N}{\sigma_H}Z_LZ_vZ_RZ_WZ_X\geqslant S_{H\min};$$

$$S_F=\frac{\sigma_{Flim}Y_{ST}Y_N}{\sigma_FY_D}Y_{\delta rel T}Y_{R rel T}Y_X\geqslant S_{F\min}.$$

4.2.2.7.6 Durability of bevel gears is determined on the basis of equivalent cylindrical gears using the geometry of the midsection.

4.2.2.7.6.1 The relevant formulae to determine the parameters of equivalent cylindrical gears in the edge section (index v) are given below:

number of teeth,

$$Z_{v_{1,2}}=Z_{1,2}/\cos\delta_{1,2};$$

reference (working) diameters,

$$d_{v_{1,2}}=d_{m_{1,2}}/\cos\delta_{1,2};$$

centre distance and equivalent gear ratio,

$$a_v = 0{,}5(d_{v_1} + d_{v_2}),$$

$$u_v = \frac{Z_{v_2}}{Z_{v_1}} = u\,\frac{\cos\delta_1}{\cos\delta_2};$$

tip diameter,

$$d_{va} = d_v + 2h_{am}$$

where h_{am} = addendum for bevel gears with constant addenda;

$$h_{am} = m_{mn}(1 + x_{hm});$$

$$m_{mn} = m_{te}\cos\beta_m \frac{R_{wm}}{R_{we}};$$

for bevel gears with variable addenda,

$$h_{am_{1,2}} = h_{ae_{1,2}} - 0{,}5b\,\mathrm{tg}(\delta_{a_{1,2}} - \delta_{1,2})$$

where h_{ae} = addendum at outer end;
δ_a = outer cone angle;

addendum modification coefficients (shall be known),

$$x_{hm_{1,2}} = \frac{h_{am1,2} - h_{am2,1}}{2m_{mn}};$$

tooth thickness modification coefficients (shall be known),

$$x_{sm_1} = -x_{sm_2};$$

base diameters of equivalent cylindrical gears,

$$d_{vb_{1,2}} = d_{v_{1,2}}\cos\alpha_{vt}$$

$$\text{where } \alpha_{vt} = \mathrm{arctg}\left(\frac{\mathrm{tg}\alpha_n}{\cos\beta_m}\right);$$

contact ratios of equivalent cylindrical gearing:
transverse contact ratio,

$$\varepsilon_{v\alpha} = \frac{g_{v\alpha}\cos\beta_m}{m_{mn}\pi\cos\alpha_{vt}}$$

$$\text{where } g_{v\alpha} = 0{,}5\left(\sqrt{d_{va_1}^2 - d_{vb_1}^2} + \sqrt{d_{va_2}^2 - d_{vb_2}^2}\right) - a_v\sin\alpha_{vt};$$

overlap contact ratio,

$$\varepsilon_{v\beta} = \frac{b\sin\beta_m}{m_{mn}\pi}\tau;$$

$$\tau = \frac{b_{eH}}{b} = 0{,}85;$$

total contact ratio,

$$\varepsilon_{v\gamma} = \varepsilon_{v\alpha} + \varepsilon_{v\beta};$$

equivalent revolutions per minute,

$$n_{v_1} = \frac{d_{m1}}{d_{v_1}}\,n_1.$$

4.2.2.7.6.2 The rated formulae determining the parameters of equivalent cylindrical gears in the normal section (index *vn) are:*
number of teeth,

$$Z_{vn_1} = \frac{Z_{v_1}}{\cos^2\beta_{vb}\cos\beta_m};$$

$$Z_{vn_2} = u_v Z_{vn_1}$$

where $\beta_{vb} = \arcsin(\sin\beta_m \cos\alpha_n)$.

Reference (working) diameters of equivalent cylindrical gears:

$$d_{vn_1} = \frac{d_{v_1}}{\cos^2\beta_{vb}} = Z_{vn_1} m_{mn};$$

$$d_{vn_2} = u_v d_{vn_1} = Z_{vn_2} m_{mn}.$$

Tip diameter

$$d_{van} = d_{vn} + d_{va} - d_v = d_{vn} + 2h_{am} = m_{mn} Z_{vn} + (d_{va} - d_v).$$

Base diameter

$$d_{vbn} = d_{vn}\cos\alpha_n = Z_{vn} m_{mn}\cos\alpha_n.$$

Transverse ratio

$$\varepsilon_{v\alpha n} = \varepsilon_{v\alpha}/\cos^2\beta_{vb}.$$

4.2.2.8 Gears with chemically and thermally hardened teeth of a large module ($m_n \geqslant 7{,}5$ mm) shall be additionally examined for depth strength. The rated safety factor for contact depth strength S_{Hd} shall be determined separately for pinion and wheel and shall satisfy the following condition:

$$S_{Hd} = \frac{\sigma_{Hdlim}}{\sigma_H} \geqslant S_{Hd\min}$$

where σ_H = determined by Formula (4.2.2.7.1);
σ_{Hdlim} = depth strength limit determined by the formulae:

$$\sigma_{Hdlim} = 5{,}5\ HBc \quad \text{if } \varphi > 0{,}6$$

and

$$\sigma_{Hdlim} = (4{,}58 + 1{,}57\varphi - 0{,}06\varphi^2) HBc\mu_T, \text{ if } \varphi > 0{,}6$$

where μ_T = a coefficient, which accounts for the probability of arising fatigue cracks not in the core, but in the hardened layer and which is determined from the diagrams in Fig. 4.2.2.8;

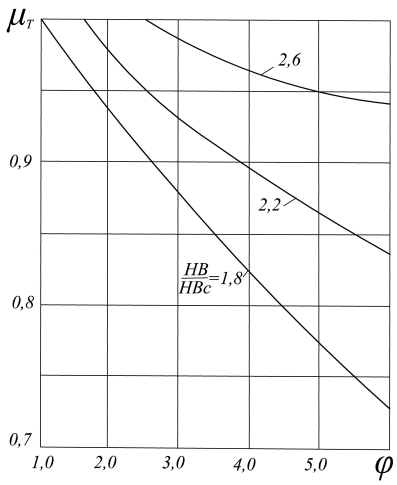

Fig. 4.2.2.8 Diagram for determining the factor μ_T versus φ and HB/HBc

parameter

$$\varphi = \frac{h_t \cdot 10^4}{\rho_c HBc}$$

where

$\rho_c = \frac{\alpha_\chi \sin \alpha_{tw}}{\cos \beta_b} \frac{u}{(u \pm 1)^2}$ — equivalent radius of curvature at the pitch point.

The minimum safety factor for depth strength $S_{Hd\,\min} = 1{,}4$.

4.2.3 Shafts.

4.2.3.1 The shaft diameter of a larger wheel shall not be less than 1,1 of the intermediate shaft diameter when the driving pinions are set at an angle of 120° and more and not less than 1,15 of the intermediate shaft diameter in all other cases, the mechanical properties of the wheel shaft and intermediate shaft being taken into consideration.

4.2.3.2 For ice class ships, the shafts, pinions and wheels of main gearing shall be calculated for a torque

$$T = K'_A T_1$$

where for K'_A, refer to Table 4.2.3.2 (refer also to 2.1.2, Part VII "Machinery Installations"; 1.3, Part XVII "Distinguishing Marks and Descriptive Notations in the Class Notation Specifying Structural and Operational Particulars of Ships").

Table 4.2.3.2

Factor	Ice class ships					
	Ice3	**Arc4**	**Arc5**	**Arc6**	**Arc7** to **Arc9** **Icebreaker6** to **Icebreaker7**	**Icebreaker8** to **Icebreaker9**
K'_A	1,15	1,25	1,5	1,75	2,0	2,5

To check the static strength of main propulsion gearing in **Arc6** to **Arc9** ice class ships and icebreakers the maximum load $T_{1\max}$ shall be taken on agreement with the Register, having regard to relative strength of the "propeller-shafting" system elements and availability of devices restricting the torque transmitted.

4.2.4 Lubrication.

4.2.4.1 Provision shall be made for forced lubrication of the toothing and sleeve bearings of main gears. The possibility of oil pressure regulation shall be provided. A safety device shall be fitted to exclude oil pressure rise above the permissible value.

4.2.4.2 Lubricating oil shall be delivered to the toothing through sprayers.

The sprayers shall provide an oil feed in the form of a fanned-out compact jet with the adjacent jets overlapping.

The sprayers shall be so arranged that, while running ahead or astern, oil is captured in the toothing.

Oil supply to and withdrawal from the bearings and sprayers shall be so arranged that there is no oil foaming or emulsification.

4.2.4.3 Lubricating oil system shall comply with the requirements of Section 14, Part VIII "Systems and Piping".

4.2.5 Control, protection and regulation.

4.2.5.1 Control stations shall comply with the requirements of 3.2, Part VII "Machinery Installations".

4.2.5.2 Provision shall be made for pressure meters at the inlet to the gearing lubrication systems and for temperature meters at inlet and outlet, as well as for a meter of oil level within the reduction gear casing.

4.2.5.3 Each sleeve and thrust bearing shall be provided with a temperature measuring device. For transferring power of less than 2250 kW, oil temperature measurement at outlet may be permitted for journal bearings. When required by the Register, the temperature measuring device may also be provided for rolling bearings.

4.2.5.4 To prevent an inadmissible rise of lubricating oil temperature in bearings or drop of the lubricating oil pressure, provision shall be made for a warning alarm system.

4.3 ELASTIC AND DISENGAGING COUPLINGS

4.3.1 General.

4.3.1.1 The requirements of the Chapter apply to the elastic and disengaging couplings of main and auxiliary machinery. As far as practical, these requirements apply to electromagnetic and hydraulic disengaging couplings as well.

4.3.1.2 As far as their material is concerned, the rigid components of shafting couplings shall satisfy the requirements of 2.4, Part VII "Machinery Installations".

4.3.1.3 Coupling bolts and coupling flanges shall satisfy the requirements of 5.2 and 5.3 and, keyless-fitted shaft couplings shall satisfy the requirements of 5.4, Part VII "Machinery Installations".

4.3.1.4 The elastic and disengaging couplings intended for ice class ships shall satisfy the requirements of 4.2.3.2.

4.3.1.5 In ships with one main engine, the shaft coupling design shall ensure, in case of coupling failure, the ship running at a speed sufficient for easy steering.

4.3.2 Elastic couplings.

4.3.2.1 Where 4.3.1.5 cannot be complied with, the ultimate static moment of the elastic component material, i.e. rubber or similar synthetic material, being in shear or tension shall be at least eight times the torque transmitted by the coupling.

4.3.2.2 For the purpose of main machinery and diesel generator sets analysis, additional loads due to torsional vibrations shall be considered (refer to Section 8, Part VII "Machinery Installations").

4.3.2.3 The elastic couplings of diesel generator sets shall withstand moments arising as a result of short-circuit. Where no such information is available, the maximum torque shall be at least 4,5 times the nominal torque transmitted by the coupling.

4.3.2.4 The possibility shall be provided of fully loading the elastic components, made of rubber or another similar synthetic material, of main machinery plant and diesel generator sets couplings within the temperature range 5 to 60 °C.

4.3.3 Disengaging couplings.

4.3.3.1 The disengaging couplings of main machinery shall be provided with devices to prevent slipping during appreciable periods of time.

4.3.3.2 It shall be possible to control the disengaging couplings of main machinery from the stations from which the main machinery is controlled.

Directly at the disengaging couplings, local emergency control arrangements shall be provided.

4.3.3.3 Where two or more engines devoted to a common propeller shaft are driving it through disengaging couplings, their control arrangement shall make a simultaneous engagement of the engines impossible when running in opposite directions.

4.4 TURNING GEAR

4.4.1 A power-driven turning gear shall be provided with an interlocking to preclude the possibility of the drives and couplings engagement when the turning gear is engaged (besides, refer to 3.1.6, Part VII "Machinery Installations" and 2.11.1.4 of the present Part).

5 AUXILIARY MACHINERY

5.1 POWER-DRIVEN AIR COMPRESSORS

5.1.1 General.

5.1.1.1 The air inlets of compressors shall be fitted with strainers.

5.1.1.2 The compressors shall be so designed that the air temperature at the outlet of the compressor last stage air cooler is not in excess of 90 °C and they shall be provided with a signalling device or warning alarm system for exceeding of the maximum temperature.

5.1.1.3 The compressor cooling water spaces shall be fitted with drain arrangements.

5.1.2 Safety devices.

5.1.2.1 Each compressor stage or directly after it shall be fitted with a safety valve preventing the pressure rise in the stage above 1,1 of the rated pressure when the delivery pipe valve is closed.

The safety valve design shall prevent any possibility of its adjustment or disconnection after being fitted on the compressor.

5.1.2.2 The compressor crankcases of more than 0,5 m^3 in volume shall be fitted with safety valves meeting the requirements of 2.3.5.

5.1.2.3 The casings of the coolers shall be fitted with safety devices providing for a free escape of air in case the pipes are broken.

5.1.3 Crankshaft.

5.1.3.1 The calculation method specified in 5.1.3.3 and 5.1.3.4 applies to the steel crankshafts of ship air compressors and refrigerant compressors with in-line, V- and W-shaped arrangements of cylinders and with single- and multi-stage compression.

Cast iron crankshafts, as well as departures from the dimensions of steel crankshafts calculated by Formulae (5.1.3.3) and (5.1.3.4) may be allowed on agreement with the Register, provided the confirming calculations or test data are submitted.

5.1.3.2 The crankshafts shall be made of steel having tensile strength 410 to 780 MPa.

During use of steel having a tensile strength over 780 MPa a technical justification shall be submitted to the Register for review confirming the structure reliability.

Cast iron crankshafts shall be manufactured of the spheroidal graphite cast iron of ferrite-perlite structure according to Table 3.9.3.1, Part XIII "Materials".

5.1.3.3 Crankpin diameter d_c, in mm, of the compressor shall not be less than that determined by the formula

$$d_c = 0{,}25k'\sqrt[3]{D_{cal}^2 \quad p_c\sqrt{0{,}3L_{cal}^2 \quad f + (s\varphi_1)^2}} \qquad (5.1.3.3)$$

where D_{cal} = calculated diameter of the cylinder, mm; for single-stage compression, $D_{cal} = D$;

D = diameter of the cylinder, mm; for two- and multi-stage compression in separate cylinders $D_{cal} = D_{h.p}$;

$D_{h.p}$ = diameter of high-pressure cylinder, mm; for two-stage compression by a tandem piston $D_{cal} = 1{,}4D_{h.p}$; for two-stage compression by a differential piston

$$D_{cal} = \sqrt{D_{l.p}^2 \quad - D_{h.p}^2} \;;$$

$D_{l.p}$ = diameter of low-pressure cylinder, mm;

p_c = delivery pressure of high-pressure cylinder for air compressors, MPa, for refrigerant compressors, the value p_c shall be taken in accordance with 2.2 of Part XII "Refrigerating Plants";

L_{cal} = calculated span between main bearings, mm, equal to:

$L_{cal} = L'$, when one crank is arranged between two main bearings;

$L_{cal} = 1{,}1\ L'$, when two cranks are arranged between two main bearings;

L' = actual span between centres of the main bearings, mm;

s = piston stroke, mm;

k', f, φ_1 = coefficients taken in accordance with Tables 5.1.3.3-1, 5.1.3.3-2 and 5.1.3.3-3.

Table 5.1.3.3-1

Values of coefficient k'

Tensile strength σ_B, MPa	390	490	590	690	780	900
k'	1,43	1,35	1,28	1,23	1,2	1,18

Table 5.1.3.3-2

Values of coefficient f

Angle between the cylinder axes	0° (in line)	45°	60°	90°
f	1,0	2,9	1,96	1,21

Table 5.1.3.3-3

Values of coefficient φ_1

Number of cylinders	1	2	4	6	8
φ_1	1,0	1,1	1,2	1,3	1,4

5.1.3.4 Thickness of crank web h, in mm, shall be not less than that determined by the formula

$$h = 0{,}105 k_1 D_{cal} \sqrt{(\psi_1 \psi_2 + 0{,}4) p_c c_1 f_1 / b} \qquad (5.1.3.4)$$

where $k_1 = a \sqrt[3]{R_m/(2\sigma_B - 430)}$;

R_m = tensile strength of material, MPa; where the tensile strength exceeds 780 MPa, σ_B equal to 780 MPa shall be adopted for calculation purposes;

a = 0,9 in the case of shafts, the surface of which is nitrided as a whole or hardened by another method approved by the Register;

a = 0,95 in the case of shafts forged by closed-die or continuous grain-flow method;

a =1,0 in the case of shafts not subjected to hardening;

ψ_1, ψ_2= coefficients taken in accordance with Tables 5.1.3.4-1 and 5.1.3.4-2;

Table 5.1.3.4-1

Values of coefficient ψ_1

r/h	ε/h						
	0	0,2	0,4	0,6	0,8	1,0	1,2
0,07	4,5	4,5	4,28	4,10	3,70	3,30	2,75
0,10	3,5	3,5	3,34	3,18	2,88	2,57	2,18
0,15	2,9	2,9	2,82	2,65	2,40	2,07	1,83
0,20	2,5	2,5	2,41	2,32	2,06	1,79	1,61
0,25	2,3	2,3	2,20	2,10	1,90	1,70	1,40

Note. r = fillet radius, mm; ε=absolute amount of overlapping, mm (Fig. 5.1.3.4); for crankshafts having the distance x between journals and pins the values of coefficient ψ_1 shall be taken valid for ratio ε/h = 0.

Table 5.1.3.4-2

Values of coefficient ψ_2

b/d	1,2	1,4	1,5	1,8	2,0	2,2
ψ_2	0,92	0,95	1,0	1,08	1,15	1,27

p_c= delivery pressure taken in accordance with 5.1.3.3;

c_1= distance from the centre of the main bearing to mid-plane of the web; for cranks arranged between two main bearings, the distance is taken to the mid-plane of the web remotest from the support, mm;

b = web thickness, mm;

f_1 = coefficient taken in accordance with Table 5.1.3.4-3.

b = web width, mm;

f_1 = factor taken from Table 5.1.3.4-3;

D_{cal}= calculated diameter of the cylinder taken according to 5.1.3.3.

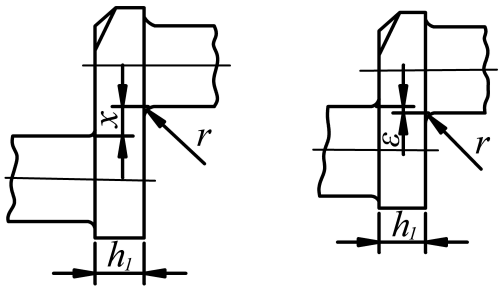

Fig. 5.1.3.4

Table 5.1.3.4-3

Values of coefficient f_1

Angle between the cylinder axes	0° (in line)	45°	60°	90°
f_1	1,0	1,7	1,4	1,1

Intermediate values of coefficients given in the tables are determined by linear interpolation.

5.1.3.5 Shaft designing and manufacturing shall comply with the requirements specified in 2.4.12 to 2.4.13.

5.1.4 Instruments.

5.1.4.1 A pressure gauge shall be fitted after each stage of the compressor.

5.1.4.2 Provision shall be made to measure the air temperature at the delivery pipe immediately after the compressor.

5.1.4.3 The instrumentation of the attached compressors shall comply with the requirements of 5.1.4.1 and 5.1.4.2 as far as their design allows.

5.2 PUMPS

5.2.1 General.

5.2.1.1 Provision shall be made to prevent the pumped fluid from penetration to the bearings. However, this does not apply to the pumps where the pumped fluid is employed for lubrication of bearings.

5.2.1.2 The pump glands arranged on the suction side are recommended to be fitted with hydraulic seals.

5.2.2 Safety devices.

5.2.2.1 If the design of the pump does not preclude the possibility of pressure rising above the rated value, a safety valve shall be fitted on the pump casing or on the pipe before the first stop valve.

5.2.2.2 In pumps intended for transferring flammable liquids, the by-pass from safety valves shall be effected into the suction side of the pump or to the suction portion of the pipe.

5.2.2.3 Provision shall be made to prevent hydraulic impacts; use of the by-pass valves for this purpose is not recommended.

5.2.3 Strength calculations.

5.2.3.1 The critical speed of the pump rotor shall not be less than 1,3 of the rated speed.

5.2.3.2 The pump elements shall be checked for strength under the stresses corresponding to the pump rated parameters. In this case, the reference stresses in the elements shall not exceed $0{,}4R_{eH}$ of the element material.

5.2.4 Self-priming pumps.

5.2.4.1 The pumps provided with self-priming devices shall ensure operation under "dry suction" conditions and shall be fitted generally with arrangements preventing the self-priming device from operating with contaminated water.

5.2.4.2 The self-priming pumps shall have the place for connecting a vacuum pressure gauge.

5.2.5 Additional requirements for the pumps transferring flammable liquids.

5.2.5.1 Sealing of the shaft shall be such that the leakages occurred will not cause the formation of vapours and gases in the amount sufficient to produce the flammable air/gas mixture.

5.2.5.2 The possibility of excessive heating and ignition in sealing of the rotating parts due to friction energy shall be excluded.

5.2.5.3 When the materials of low electrical conductivity (plastics, rubber, etc.) are used in the pump structure, provision shall be made for removal of the electrostatic charges by insertion of the conductive additives into them or use of the devices for removal of the charges and for their transfer to the body.

5.2.6 Additional requirements for cargo, stripping and ballast pumps of oil tankers.

The casings of pumps installed in the cargo pump rooms in accordance with 4.2.5, Part VII "Machinery Installations" shall be provided with temperature sensors.

5.3 FANS, BLOWERS AND TURBOCHARGERS

5.3.1 General.

5.3.1.1 The requirements of the present Chapter shall be complied with when designing and manufacturing fans intended to complete the systems specified in Part VIII "Systems and Piping", as well as boiler fans and internal combustion engine turboblowers.

5.3.1.2 The rotors of fans and air blowers with couplings as well as turbocharger rotor assemblies shall be dynamically balanced in accordance with 4.1.2.

5.3.1.3 The suction pipes of fans, blowers and turbochargers shall be protected against entry of foreign objects.

5.3.1.4 The lubricating oil system of the turbocharger bearings shall be so arranged as to prevent the oil from getting into the supercharging air.

5.3.2 Strength calculation.

The impellers of the turbines and blowers shall be so dimensioned that at a speed equal to 1,3 of the rated speed the reference stresses at any section are not in excess of $0{,}95R_{eH}$ of the element material.

The impellers of the turbines and blowers shall be also tested for strength during at least 3 min at a speed equal to 1,2 times of the designed speed.

Such testing of the prototype of the turbine and blower impellers is mandatory.

Series specimens may not be subjected to such testing, provided each impeller forging shall be tested by one of the approved non-destructive testing methods.

On agreement with the Register other safety factors for the turboblowers may also be permitted if the calculation procedures are used taking account of the stress concentrations and plasticity (finite element method).

5.3.3 Additional requirements for the ventilators of cargo pump rooms in oil tankers, spaces intended for the carriage of dangerous goods and spaces in which motor vehicles are carried with fuel in their tanks.

5.3.3.1 The air gap between the impeller and the casing shall not be less than 0,1 of the impeller shaft bearing diameter, but not less than 2 mm (it is permitted to be not more than 13 mm).

5.3.3.2 Protection screens of not more than 13 mm square mesh shall be fitted in the inlet and outlet of ventilation ducts at the open deck to prevent the entrance of objects into the fan housing.

5.3.3.3 To prevent electrostatic charges both in the rotating body and casing, they shall be made of antistatic materials. Furthermore, the installation on board of the ventilation units shall be such as

to ensure their safe bonding to the ship's hull according to requirements of Part XI "Electrical Equipment".

5.3.3.4 The impeller and the housing (in way of the impeller) shall be made of materials, which are recognized as being sparkproof.

The following combinations of materials of impeller and housing are considered sparkproof:

.1 non-metallic antistatic materials;

.2 non-ferrous-based alloys;

.3 austenitic stainless steel;

.4 impeller is made of aluminium alloy or magnesium alloy and housing is made of cast iron steel (austenitic stainless steel included), if a ring of suitable thickness of non-ferrous materials is fitted inside the housing in way of impeller;

.5 any combination of cast iron and steel impellers and housings (including the case when impeller or housing is made of austenitic stainless steel), provided the tip clearance is not less than 13 mm.

5.3.3.5 Other combinations of materials of impellers and housings, not specified in 5.3.3.4, may also be permitted if they are recognized as non-sparking by appropriate tests.

5.3.3.6 The following combinations of materials of impeller and housing are not permitted:

.1 impellers are made of aluminium alloy or magne-sium alloy and housings are made of ferrous-based alloys;

.2 impellers are made of ferrous-based alloys and housings are made of aluminium or magnesium alloys;

.3 impellers and housings are made of ferrous-based alloys with less than 13 mm tip clearance.

5.4 CENTRIFUGAL SEPARATORS

5.4.1 General.

5.4.1.1 The separator design shall preclude the leakage of oil products and vapours thereof under any conditions of the separation.

5.4.1.2 The separator bowls shall be dynamically balanced. The position of the removable parts shall be marked. The design of the disc holder and bowl shall preclude the possibility of misassembly thereof.

5.4.1.3 "Rotor-stator" systems shall be so designed that the critical speed exceeds the operating speed both in empty and in filled condition.

The critical speed less than the rated speed may be allowed only provided that proofs of continuous safe operation of the separator are submitted.

5.4.1.4 The design of coupling shall preclude the possibility of sparking and impermissible heating under all conditions of the separator operation.

5.4.2 Strength calculation.

5.4.2.1 Besides, the strength of rotating separator parts shall be checked under stresses arising at rotational speeds exceeding the design speed at least by 30 %; in this case, the total stresses in the parts shall not exceed $0{,}95R_{eH}$ of the material, of which they are made.

5.4.2.2 At the manufacturer's test bench, the strength of the rotating parts of the prototype separator shall be tested by a rotation speed exceeding the design speed by 30 % at least.

5.4.3 Instrumentation and protection.

5.4.3.1 A device for the control over the separation process shall be provided.

5.4.3.2 It is advisable that the separators be provided with a device automatically shutting off the drive and stopping the separator when inadmissible vibration occurs.

5.5 NATURAL GAS (METHANE) COMPRESSORS

5.5.1 Compressors installed on board the gas carriers carrying methane and used for supply of methane to dual-fuel internal combustion engines (refer to 9.1.1) shall be capable of rising pressure from the atmospheric pressure up to 25 to 30 MPa at the suction temperature not higher than -163 °C.

6 DECK MACHINERY

6.1 GENERAL

6.1.1 The brake straps and their fastenings shall be resistant to sea water and petroleum products. The brake straps shall be heat-resistant at temperatures up to 250 °C.

The permissible heat resistance of connections between the brake strap and the frame shall be above the temperature of heating of the connections for all possible operating conditions of the machinery.

6.1.2 The machinery having both manual and power drives shall be provided with interlocking arrangements preventing their simultaneous operation.

6.1.3 The deck machinery control arrangements shall be so made that heaving-in is performed when the handwheel is turned to the right or when the lever is shifted backwards while veering out is carried on when the handwheel is turned to the left or the lever is shifted forwards. Locking of brakes shall be carried out by turning the handwheels to the right while releasing is effected by turning to the left.

6.1.4 The control devices, as well as the instrumentation shall be so arranged as to provide the observation of them from the control place.

6.1.5 The machinery with the hydraulic drive or control shall additionally comply with the requirements of Section 7.

6.1.6 Winch drums having the multilayer rope winding with the ropes that can be subjected to the load in several layers shall have flanges protruding above the upper layer of winding by not less than 2,5 times the rope diameter.

6.1.7 If used for oil-recovery operations, cargo winches and topping of derricks, cargo-lifting appliances, luffing gear, slewing and travelling machinery of cranes and hoists, and other deck machinery installed in danger zones 0, 1 and 2 shall be intrinsically safe, and relevant safety certificates shall be issued for them by a competent body (for the definition of danger zones refer to 19.2, Part XI "Electrical Equipment").

6.2 STEERING GEAR

6.2.1 General.

6.2.1.1 Main and auxiliary steering gear (refer to 1.2.9, Part III "Equipment, Arrangements and Outfit") shall be so arranged that a single failure in one of them will not render the other one inoperative.

6.2.1.2 Main steering gear comprising two or more identical power units (refer to 2.9.4, Part III "Equipment, Arrangements and Outfit") shall be so arranged that a single failure in its piping or in one of the power units will not impair the integrity of the remaining part of the steering gear.

In oil tankers, oil tankers ($\geqslant$60 °C), chemical tankers or gas carriers of 10000 gross tonnage and upwards, hydraulic steering gear shall be provided with audible and visual alarms to give the indication of hydraulic fluid leakage in any part of the hydraulic system as well as with the arrangements of automatic isolation of the defective part of the system so that the steering capability shall be regained in not more than 45 s after the loss of the defective port of the hydraulic system.

6.2.1.3 The design of the gears shall provide in emergency for changing from the main steering gear to the auxiliary one during not more than 2 min.

6.2.1.4 Steering gears shall provide for a continuous operation under the most severe service conditions.

The design of the steering gear shall exclude the possibility of its failure with a ship running astern at maximum speed.

6.2.1.5 As a rated torque of the steering gear M_r the torque is taken corresponding to the rudder (steering nozzle) angle equal to 35° for the main steering gear and 15° for the auxiliary steering gear when operating under the nominal parameters (nominal pressure in the inner spaces of hydraulic and electrohydraulic gears, nominal current and voltage in the electric steering gear motors, etc.). In this case, the torque corresponding to the rudder angle 0° shall not be less than 0,82 M_r.

6.2.1.6 The requirements of equipping the ships with the steering gears are specified in 2.9, Part III "Equipment, Arrangements and Outfit".

6.2.1.7 In case of the hydraulic steering gear, provision shall be made for the fixed storage tank for hydraulic fluid with the capacity sufficient to fill at least one power actuating system, the equalizing tank included. This fixed tank shall be provided with a water level indicator and connected to the hydraulic gear by the piping so as its hydraulic systems can be filled directly from the tiller room.

Each equalizing tank shall be provided with a minimum water level alarm.

6.2.1.8 Every oil tanker, oil tanker (⩾60 °C), chemical tanker or gas carrier of 10000 gross tonnage and upwards shall comply with the following requirements (refer also to 6.2.1.9):

.1 the main steering gear shall be so arranged that in the event of loss of steering capability due to a single failure in any part of one of the power actuating systems of the main steering gear excluding the tiller, quadrant or components serving the same purpose as well as seizure of the rudder actuators, steering capability could be regained in not more than 45 s after the loss of one power actuating system;

.2 the main steering gear shall comprise either:

.2.1 two independent and separate power actuating systems each capable of meeting the requirements of 2.9.2, Part III "Equipment, Arrangements and Outfit"; or

.2.2 at least two identical power actuating systems which, acting simultaneously in normal operation, are capable of meeting the requirements of 2.9.2, Part III "Equipment, Arrangements and Outfit".

In this case the interconnection of hydraulic systems shall be provided. Loss of hydraulic fluid from any power actuating system shall be capable of being detected and the defective system automatically isolated so that the other actuating system (systems) is (are) to remain fully operative;

.3 steering gears other than of the hydraulic type shall achieve equivalent standards.

6.2.1.9 Hydraulic steering gear shall comply with the requirements of Section 7 of the present Part, Part III "Equipment, Arrangements and Outfit" and Part XI "Electrical Equipment".

6.2.1.10 The pipes of hydraulic steering gear systems shall comply with the requirements of Part VIII "Systems and Piping" for Class I piping system. The requirements for flexible joints used for the hydraulic steering gear systems are specified in 2.5, Part VIII "Systems and Piping".

6.2.1.11 For oil tankers, oil tankers (⩾60 °C), chemical carriers or gas carriers of 10000 gross tonnage and upwards but of less than 100000 tons deadweight, at the Register discretion, solutions other than those set out in 6.2.1.8, which need not apply the single failure criterion to the rudder actuator or actuators, may be permitted provided, that an equivalent safety standard is achieved and that:

.1 following loss of steering capability due to a single failure of any part of the piping system or of one of the power units, steering capability shall be regained within 45 s; and

.2 where a steering gear includes only a single rudder actuator, special consideration is given to stress analysis for the design including fatigue and fracture mechanics analysis, as appropriate, to the material used, the installation of sealing arrangements and testing and inspection as well as to the provision of effective maintenance.

6.2.1.12 Hydraulic system components in the power actuating or hydraulic servo systems controlling the power systems of the steering gear (e.g. solenoid valves, magnetic valves) shall be considered as part of the steering gear control system and shall be duplicated and separated.

Hydraulic system components in the steering gear control system that are part of a power unit may be regarded as being duplicated and separated when there are two or more separate power units provided and the piping to each power unit can be isolated.

6.2.1.13 Steering gear of passenger ships having length, as defined in 1.2.1 of the Load-Line Rules for Sea-Going Ships, of 120 m or more or having three or more main vertical zones, shall comply with the requirements of 2.2.6.7.2 and 2.2.6.8, Part VI "Fire Protection".

6.2.2 Power of steering gear.

6.2.2.1 The main steering gear shall be capable of putting the rudder (steering nozzle) over from 35° on one side to 30° on the other side in not more than 28 s when the rudder stock is affected by a rated torque of the steering engine at maximum operational draught and maximum operational speed of the ship.

6.2.2.2 The auxiliary steering gear shall be capable of putting the rudder (steering nozzle) over from 15° on one side to 15° on the other side in not more than 60 s under conditions stipulated by 2.9.3, Part III "Equipment, Arrangements and Outfit".

6.2.2.3 The steering gear power units shall permit a torque overload of at least 1,5 times the rated torque for a period of 1 min.

The steering gear electric motors shall comply with the requirements of 5.5, Part XI "Electrical Equipment".

6.2.3 Hand-operated steering gear.

6.2.3.1 The main hand-operated steering gear shall be of self-braking design.

The auxiliary hand-operated steering gear shall be either of self-braking design or shall have a locking device provided that it is reliably controlled from the control station.

6.2.3.2 The main hand-operated steering gear shall meet the requirements of 6.2.2.1 when handled by one man with a force of not over 120 N applied to the steering wheel handles and with the number of rotations, when shifting the rudder from hard over to hard over, not more than $9/R$ during shifting the rudder from hard over to hard over, where R is arm (radius) of the steering wheel handle up to the middle of its length, m.

6.2.3.3 The auxiliary hand-operated steering gear shall meet the requirements of 6.2.2.2 when handled by not more than four men with a force of not more than 160 N per helmsman applied to the steering wheel handles.

6.2.4 Protection against overload and reverse rotation.

6.2.4.1 The main and auxiliary steering gears shall have protection against overloads of the gear elements and assemblies when a rudder stock torque equal to 1,5 times the corresponding rated value arises. In case of hydraulic steering gear the safety valves may be used set to a pressure meeting the above-mentioned requirements, but not in excess of 1,25 times the corresponding maximum working pressure in the inner spaces of the hydraulic steering gear.

The design of the safety device shall permit its sealing.

The minimum capacity of the relief valves shall exceed the total pump capacity by 10 %; in this case, the pressure of the hydraulic steering gear cavities shall not exceed the pressure, to which the relief valves are adjusted.

6.2.4.2 For the main hand-operated steering gear it is sufficient to provide the gear with buffer springs instead of the protection against overload required by 6.2.4.1.

For the auxiliary hand-operated steering gear the fulfilment of the requirement for protection against overload is not compulsory.

6.2.4.3 The pumps of hydraulic steering engines shall be provided with protective devices preventing rotation of the inoperative pump in the opposite direction or with an automatic arrangement shutting out the flow of liquid through the inoperative pump.

6.2.5 Braking device.

6.2.5.1 The steering gear shall be fitted with a brake or some other device, which provides keeping the rudder (the steering nozzle) steady at any position when the latter exerts a rated torque without allowing for the efficiency of the rudder stock bearings.

6.2.5.2 Where the pistons or blades of the hydraulic steering gear can be locked by closing the oil pipeline valves, a special braking device may be omitted.

6.2.6 Limit switches.

Each power-operated steering gear shall be provided with a device discontinuing its operation before the rudder (the steering nozzle) reaches the rudder (the steering nozzle) stops.

6.2.7 Rudder (steering nozzle) indicators.

The steering gear segment rack or the hydraulic steering engine crosshead guide, or the element rigidly coupled with the rudder stock shall be fitted with a dial calibrated in not more than 1° to indicate the actual position of the rudder (the steering nozzle).

6.2.8 Strength calculation.

6.2.8.1 The main and auxiliary steering gear components to be used in flux of force lines shall be checked for strength under the stress corresponding to the rated torque, and the piping and other steering gear components subjected to internal hydraulic pressure — to the rated pressure.

The design pressure for calculations to determine the scantlings of piping and other steering gear components subjected to internal hydraulic pressure shall be at least 1,25 times the maximum working pressure to be expected under the operational conditions. In this case, at the discretion of the Register fatigue criterion shall be applied for the design of piping and components, taking account of pulsating pressures due to dynamic loads.

In all above cases the reference stresses in the components shall not exceed $0{,}4R_{eH}$ for the steel components and $0{,}18\sigma_B$ for the components of spheroidal cast iron.

6.2.8.2 The stresses in the elements common for both the main and auxiliary steering gears (viz., tiller, segment, reduction gear, etc.) shall not exceed 80 % of the stresses tolerable in compliance with 6.2.8.1.

6.2.8.3 The steering gear elements unprotected from overloads by safety devices specified in 6.2.4 shall have strength corresponding to the rudder stock strength.

6.2.9 Connection with rudder stock.

6.2.9.1 The connection of the steering engine or gear with the elements rigidly coupled with the rudder stock shall eliminate the possibility of breakdown on the steering gear when the rudder stock is shifted in the axial direction.

6.2.9.2 Connecting of the tiller hub or segment rack with the rudder stock shall be designed to transmit no less than double rated torque M_r stated in 6.2.1.5. The height of the hubs of loose segment racks and auxiliary tillers shall not be less than 0,8 of the diameter of the rudder stock head. In case of press keyless fitted solid hubs on the rudder stock the friction coefficient shall be taken not more than 0,13.

6.2.9.3 The split hubs shall be fastened with at least two bolts on each side and have two keys. The keys shall be arranged at an angle of 90° to the split joints plane.

6.2.9.4 Additional requirements for the AMSS turning or thrust angle changing mechanisms — refer to Section 7, Part VII "Machinery Installations".

6.3 ANCHOR MACHINERY

6.3.1 General

6.3.1.1 The design, construction and testing of windlasses shall conform to an acceptable standard, or code of practice. To be considered acceptable, the standard or code of practice shall specify criteria for stresses, performance and testing.

The following plans showing the design specifications, the standard of compliance, engineering analyses and details of construction, as applicable, shall be submitted for evaluation (refer to 1.2.3.2 of the Part):

windlass design specifications; anchor and chain cable particulars; anchorage depth;

performance criteria; standard of compliance;

windlass arrangement plan showing all of the components of the anchoring/mooring system such as the prime mover, shafting, cable lifter, anchors and chain cables;

mooring winches, wires and fairleads, if they form part of the windlass machinery;

brakes; controls; etc;

dimensions, materials, welding details, as applicable, of all torque-transmitting (shafts, gears, clutches, couplings, coupling bolts, etc.) and all load bearing (shaft bearings, cable lifter, sheaves, drums, bed-frames, etc.) components of the windlass and of the winch, where applicable, including brakes, chain stopper (if fitted) and foundation;

hydraulic system, to include:

i) piping diagram along with system design pressure;

ii) safety valves arrangement and settings;

iii) material specifications for pipes and equipment;

iv) typical pipe joints, as applicable, and;

v) technical data and details for hydraulic motors;

electric one line diagram along with cable specification and size; motor controller;

protective device rating or setting; as applicable;

control, monitoring and instrumentation arrangements;

engineering analyses for torque-transmitting and load-bearing components demonstrating their compliance with recognized standards or codes of practice.

Analyses for gears are to be in accordance with a recognized standard;

plans and data for windlass electric motors including associated gears rated 100 kW and over;

calculations demonstrating that the windlass prime mover is capable of attaining the hoisting speed, the required continuous duty pull, and the overload capacity are to be submitted if the “load testing” including “overload” capacity of the entire windlass unit is not carried out at the shop (refer to 5.10.3.7, Part IV "Technical Supervision during Manufacture of Products" of the Rules for Technical Supervision during Construction of Ships and Manufacture of Materials and Products for Ships);

operation and maintenance procedures for the anchor windlass are to be incorporated in the vessel operations manual.

6.3.2 Materials and Fabrication

6.3.2.1 Materials

Materials used in the construction of torque-transmitting and load-bearing parts of windlasses shall comply with Part XIII "Materials" or of a national or international material standard. The proposed materials shall be indicated in the construction plans and shall be approved in connection with the design. All such materials shall be certified by the material manufacturers and shall be traceable to the manufacturers’ certificates.

6.3.2.2 Welded Fabrication

Weld joint designs shall be shown in the construction plans and shall be approved in association with the approval of the windlass design. Welding procedures and welders shall be qualified in accordance with the requirements of Part XIV "Welding". Welding consumables shall be type-approved by the class society. The degree of non-destructive examination of welds and post-weld heat treatment, if any, shall be specified and submitted for consideration.

6.3.3 Design.

Along with and notwithstanding the requirements of the chosen standard of compliance, the following requirements are also to be complied with. In lieu of conducting engineering analyses and submitting them for review, approval of the windlass mechanical design may be based on a type test, in which case the testing procedure is to be submitted for consideration.

6.3.3.1 Mechanical Design.

6.3.3.1.1 Design Loads.

a) Holding Loads

Calculations shall be made to show that, in the holding condition (single anchor, brake fully applied and chain cable lifter declutched), and under a load equal to 80 % of the specified minimum breaking strength of the chain cable, the maximum stress in each load bearing component will not exceed yield strength (or 0,2 % proof stress) of the material. For installations fitted with a chain cable stopper, 45 % of the specified minimum breaking strength of the chain cable may instead be used for the calculation.

b) Inertia Loads

The design of the drive train, including prime mover, reduction gears, bearings, clutches, shafts, cable lifter and bolting is to consider the dynamic effects of sudden stopping and starting of the prime mover or chain cable so as to limit inertial load.

6.3.3.1.2 Continuous Duty Pull

The windlass prime mover shall be able to exert for at least 30 min a continuous duty pull (e.g., 30-minute short time rating), Z_{cont1}, corresponding to the grade and diameter, d, of the chain cables as follows:

Grade of Z_{cont1}	Z_{cont1}	
	N	kgf
1 2 3	$37{,}5d^2$ $42{,}5d^2$ $47{,}5d^2$	$3{,}82d^2$ $4{,}33d^2$ $4{,}84d^2$
Unit of d	mm	mm

For anchorage depth deeper than 82,5 m, a continuous duty pull pull Z_{cont2} is:

$Z_{cont2}[H] = Z_{cont1}[H] + (D - 82{,}5) \text{ x } 0{,}27d^2$

or

$Z_{cont2}[кгс] = Z_{cont1}[кгс] + (D - 82{,}5) \text{ x } 0{,}0275d^2$

where D is the anchor depth, in m.

The anchor masses shall be assumed to be the masses as given in Section 3 of Part III "Equipment, Arrangements and Outfit". Also, the value of Zcont shall be based on the hoisting of one anchor at a time, and that the effects of buoyancy and hawse pipe efficiency (assumed to be 70 %) have been accounted for. In general, stresses in each torque-transmitting component are not to exceed 40 % of yield strength (or 0,2 % proof stress) of the material under these loading conditions.

6.3.3.1.3 Overload Capability.

The windlass prime mover is to be able to provide the necessary temporary overload capacity for breaking out the anchor. This temporary overload capacity or “short term pull” shall be at least 1,5 times the continuous duty pull applied for at least 2 min. The speed in this period may be lower than normal.

6.3.3.1.4 Hoisting Speed

The mean speed of the chain cable during hoisting of the anchor and cable shall be at least

0,15 m/sec. For testing purposes, the speed shall be measured over two shots of chain cable and initially with at least three shots of chain (82,5 m or 45 fathoms in length) and the anchor submerged and hanging free.

6.3.3.1.5 Brake Capacity.

The capacity of the windlass brake is to be sufficient to stop the anchor and chain cable when paying out the chain cable. Where a chain cable stopper is not fitted, the brake shall produce a torque capable of withstanding a pull equal to 80 % of the specified minimum breaking strength of the chain cable without any permanent deformation of strength members and without brake slip. Where a chain cable stopper is fitted, 45 % of the breaking strength may instead be applied.

6.3.3.1.6 Chain Cable Stopper.

Chain cable stopper, if fitted, along with its attachments shall be designed to withstand,

without any permanent deformation, 80 % of the specified minimum breaking strength of the chain cable (refer to 3.6.1.3 of Part III "Equipment, Arrangements and Outfit").

6.3.3.1.7 Support Structure

For hull supporting structures of windlass and chain cable stoppers, refer to Sections 3 and 4 of Part III "Equipment, Arrangements and Outfit".

6.3.3.2 Hydraulic Systems.

Hydraulic systems where employed for driving windlasses shall comply with the provisions of Section 7 of the Part.

6.3.3.3 Electrical Systems.

6.3.3.3.1 Electric Motors.

Electric motors shall meet the requirements of 5.6, Part XI "Electrical Equipment" and shall be the RS certificated according to the form specified in the Nomenclature of Items of the Register Technical Supervision. Motors exposed to weather shall have enclosures suitable for their

Location and have minimum degree of protection as provided for in the requirements of 2.4.4.2 Part XI "Electrical Equipment". Where gears are fitted, they shall meet the requirements of 4.2, Part IX "Machinery", and those rated 100 kW and over shall be certified.

6.3.3.3.2 Electrical Circuits.

Motor branch circuits shall be protected in accordance with the provisions of 8.3, Part XI "Electrical Equipment" and cable sizing shall be in accordance with the requirements 16.8.2, Part XI "Electrical Equipment".

Electrical cables installed in locations subjected to the sea shall be provided with effective mechanical protection.

6.3.3.4 Protection of Mechanical Components

To protect mechanical parts including component housings, a suitable protection system shall be fitted to limit the speed and torque at the prime mover. Consideration shall be given to a means to contain debris consequent to a severe damage of the prime mover due to overspeed in the event of uncontrolled rendering of the cable, particularly when an axial piston type hydraulic motor forms the prime mover.

6.3.3.5 Couplings

Windlasses are to be fitted with couplings which are capable of disengaging between the cable lifter and the drive shaft. Hydraulically or electrically operated couplings shall be capable of being disengaged manually.

6.3.4 Testing and Marking,

Windlasses shall be surveyed during fabrication at the manufacturers' facilities by a

Surveyor for conformance with the approved plans and during acceptance tests, as specified in 5.10.3, Part IV "Technical Supervision during Manufacture of Products" of the Rules for Technical Supervision of Ships and Manufacture of Materials and Products for Ships

The windlass on-board testing and marking shall be carried out in compliance with 3.3.2 of the Guidelines on Technical Supervision of Ships under Construction.

6.3.5 Strength calculation.

6.3.5.1 The machinery elements shall be checked for strength when fastening to the ship's foundation, including protection against wave forces as specified in 1.4.6.1, Part VIII "Systems and Piping" (refer to 6.3.5.3 - 6.3.5.8). The requirement does not cover oil tankers and bulk carriers to suit the requirements of Part XVIII "Common Structural Rules for Bulk Carriers and Oil Tankers" and Part XIX "Additional Requirements for Structures of Container Ships and Ships Dedicated Primarily to carry their Load in Containers").

6.3.5.2 The anchor machinery elements situated in lines of force flow shall be checked for strength when affected by stresses corresponding to the rated pull on the sprocket P_1 or P_2. In this case, the reference stresses in the elements shall not exceed $0{,}4R_{eH}$ of the element material.

6.3.5.3 The following pressures and associated areas shall be applied (refer to Fig. 6.3.5.3):

200 kN/m^2 normal to the shaft axis and away from the forward perpendicular, over the projected area in this direction;

150 kN/m^2 parallel to the shaft axis and acting both inboard and outboard separately, over the multiple of f times the projected area where f is determined by the formula

$$f = 1 + B/H \qquad (6.3.5.3)$$

where B = width of machinery measured parallel to the shaft axis;
H = overall height of machinery

but not more than 2,5.

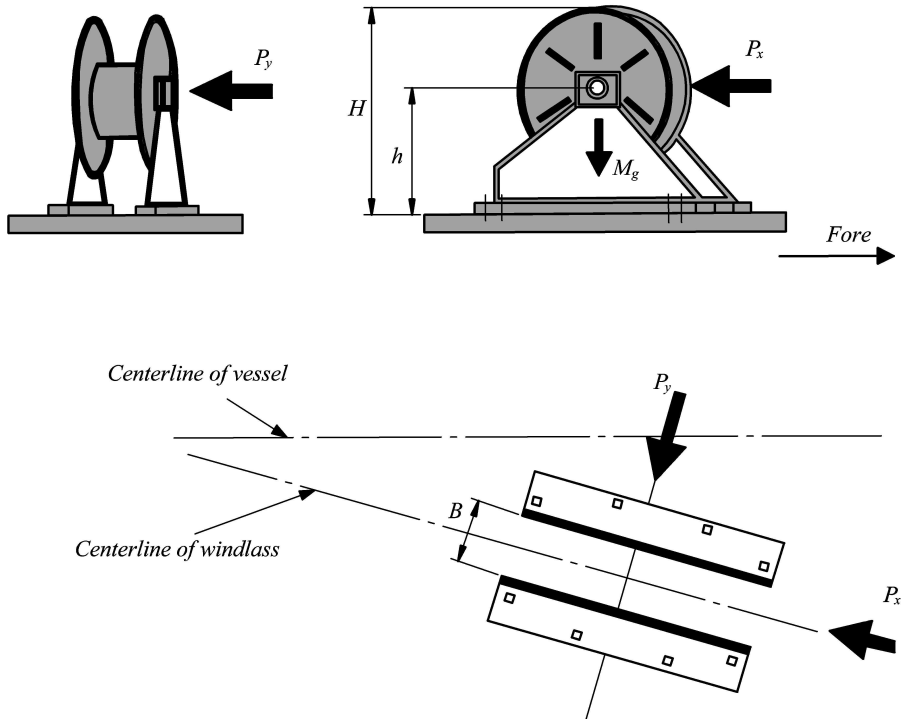

Fig. 6.3.5.3
Direction of forces
N o t e . P_y shall be examined from both inboard and outboard directions separately, refer to 6.3.5.3.
The sign convention for y_i is reversed when P_y is from the opposite direction as shown

6.3.5.4 Forces in bolts, chocks and stoppers securing the machinery to the deck shall be calculated. The machinery is supported by N bolt groups, each containing one or more bolts (refer to Fig. 6.3.5.4).

6.3.5.5 The axial force R_i in the bolt group or one bolt, positive in tension, may be determined by the formula

$$R_i = R_{xi} + R_{yi} - R_{si} \qquad (6.3.5.5)$$

where $R_{xi} = P_x h x_i A_i / I_x$;

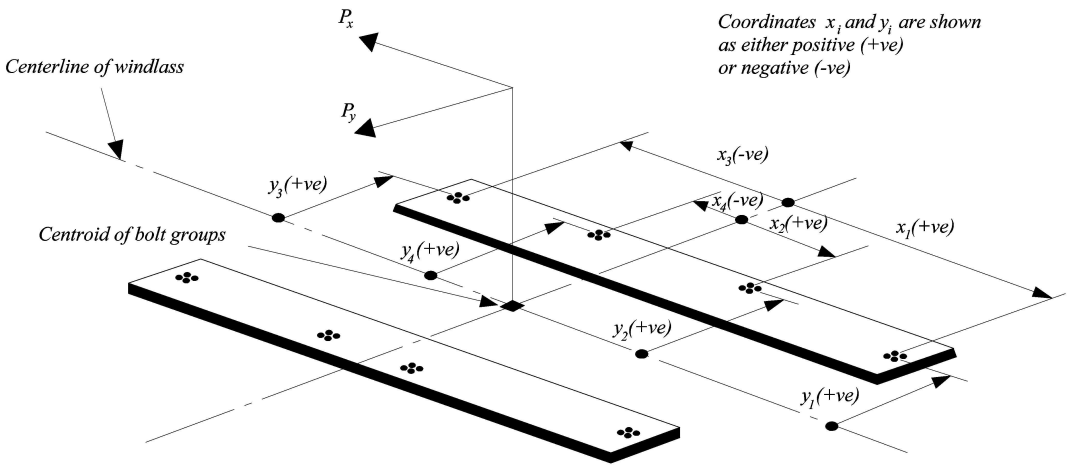

Fig. 6.3.5.4
Sign convention

$R_{yi} = P_y h y_i A_i / I_y$;
P_x = force acting normal to the shaft axis, kN;
P_y = force acting parallel to the shaft axis, either inboard or outboard, whichever gives the greater force in i bolt group, kN;
h = shaft height above the windlass mounting, cm;
x_i, y_i = x and y coordinates of i bolt group from the centroid of all N bolt groups, positive in the direction opposite to that of the applied force, cm;
A_i = cross sectional area of all bolts in i group, cm^2;
$I_x = \Sigma A_i x_i^2$ for N bolt groups;
$I_y = \Sigma A_i y_i^2$ for N bolt groups;
R_{si} = static reaction at i bolt group, due to weight of windlass.

6.3.5.6 Shear forces F_{xi} and F_{yi} applied to i bolt group, and the resultant combined force F_i may be determined by the formulae:

$$F_{xi} = (P_x - \alpha g M)/N; \quad (6.3.5.6\text{-}1)$$

$$F_{yi} = (P_y - \alpha g M)/N; \quad (6.3.5.6\text{-}2)$$

$$F_i = (F_{xi}^2 + F_{yi}^2)^{0,5} \quad (6.3.5.6\text{-}3)$$

where α = coefficient of friction equal to 0,5;
M = mass of windlass, t;
g = gravity acceleration, m/s^2;
N = number of bolt groups.

6.3.5.7 Axial tensile and compressive forces in 6.3.5.5 and lateral forces in 6.3.5.6 shall be considered in the design of supporting structure.

6.3.5.8 Tensile axial stresses in the individual bolts in each i bolt group shall be calculated. The horizontal forces F_{xi} and F_{yi} shall normally be reacted by shear chocks. Where "fitted" bolts are designed to support these shear forces in one or both directions, equivalent stresses in the individual bolts shall be calculated, and compared to the allowable stresses. Where synthetic compounds are incorporated in the holding down arrangements, due account shall be taken in the calculations. The safety factor against bolt proof strength shall not be less than 2,0.

6.3.6 Additional requirements.

6.3.6.1 The anchor machinery intended for handling with mooring operations shall comply with the requirements of 6.4, in addition to those of the Chapter.

6.3.6.2 The requirements of the Chapter apply to the remote-controlled anchor machinery chosen in accordance with 3.1.5, Part III "Equipment, Arrangements and Outfit".

6.3.6.3 If the provision is made for remote control of paying out the chain cable with the sprocket disconnected from the anchor machinery drive, a device shall be fitted ensuring an automatic braking by the band brake in order that the maximum speed of paying out will not exceed 3 m/s. In ships with Equipment Number of 400 and less it is permissible not to install a device for an automatic braking by the band brake.

6.3.6.4 The chain sprocket brake shall provide for smooth stopping of the chain cable when paying it out for a period of not more than 5 s and not less than 2 s from the moment of initiation of the signal from the control station.

6.3.6.5 Provision shall be made at the remote control station for an indicator of the length of the chain cable payed out and the indicator of the paying out speed of the cable with the mark of 3 m/s of the maximum permissible speed.

6.3.6.6 Machinery and machinery elements, for which the remote control is provided, shall be manually operated from the local position. The failure of any element or the whole remote control system shall not affect adversely the normal operation of the anchor machinery and equipment manually operated from the local position (refer also to 5.1.3, Part XI "Electrical Equipment").

6.4 MOORING MACHINERY

6.4.1 Drive.

6.4.1.1 The mooring machinery drive shall provide for an uninterrupted heaving-in of a mooring line at a rated pull with the rated speed for a period of not less than 30 min.

The speed, v, of heaving-in of a mooring line on the first rope winding layer on the drum with the nominal pulling force F shall not be less than stated in Table 6.4.1.1.

Table 6.4.1.1

v, in m/s	0,25	0,2	0,16	0,13
F, in kN	Up to 80	81 — 160	161 — 250	Above 250

The speed of heaving-in of a mooring line by the use of a warping drum at the rated pull shall not be over 0,3 m/s. Instructions on the choice of the rated pull are given in 4.4.2, Part III "Equipment, Arrangements and Outfit".

6.4.1.2 Under the rated conditions of the mooring machinery (refer to 6.4.1.1) its drive shall develop the pull on the first rope winding layer on the drum equal at least to 1,5 times the rated value in 2 min.

6.4.2 Overload protection.

If the maximum torque of the drive may bring about a larger load on the mooring machinery elements than that specified in 6.4.4, an overload protection shall be provided.

6.4.3 Brake.

6.4.3.1 The mooring machinery shall be provided with an automatic brake ensuring a hold, without a slip on the mooring line at a pull equal to 1,5 times the rated one when the driving energy disappears or the driving engine fails.

Winches with hydraulic and steam drives with no driving energy shall withstand a tension force of 1,25 times the design pull. Speed of cable paying out shall be checked within 1,0 m/min.

6.4.3.2 The mooring machinery drum shall be provided with a brake, a braking torque of which shall ensure keeping the mooring line from unreeling at a pull in the line equal to 0,8 times the breaking load of the line on the first rope winding layer on the drum.

The force applied to the brake drive handle shall not exceed 740 N.

If the drum is fitted with an arresting or other safety device, the possibility shall be provided for disengaging the drum by an approved means when the mooring cable is under the load.

6.4.4 Strength calculation.

6.4.4.1 The mooring machinery elements situated in lines of force flow shall be checked for strength under the rated pull on the mooring drum. In this case, the reference stresses in the elements shall not exceed $0{,}4R_{eH}$ of the element material.

6.4.4.2 The elements of the mooring machinery and the elements of its fastening to foundation shall be checked for strength under the effect of the maximum torque of the drive and when the drum is affected by an effort equal to breaking force of the mooring cable.

Besides, the strength of the warping drum shaft under the load applied in the middle of its length, equal to the breaking force of the mooring cable shall be checked.

In all above-mentioned cases, the stress in the elements shall not exceed $0{,}95R_{eH}$ of the element material.

The strength of the mooring machinery elements shall allow for all possible kinds and geometrical directions of the loads that may arise during operation.

The strength of the mooring rope intended for operation with the mooring machinery shall be indicated on the machinery.

6.4.5 Automatic mooring winches.

6.4.5.1 The performance characteristics and durability of the automatic mooring winches shall not be inferior to the similar-purpose non-automatic machinery.

6.4.5.2 Automatic winches shall be equipped with the manual control to provide the possibility of non-automatic operation.

6.4.5.3 The following shall be provided:

sound warning alarm operating with the maximum permissible length of the mooring rope veered out;

an indicator of the actual pull in the mooring rope under the automatic operation.

For pull measuring it is recommended to install sensors with electric output signal.

6.5 TOWING WINCHES

6.5.1 Where automatic devices are used for governing the tension of the towline, provision shall be made to enable checking the value of tension at every moment. The tension indicators shall be installed at the towing winch and on the bridge. For pull measuring it is recommended to install sensors with electric output signal.

6.5.2 Sound warning alarm operating when the maximum permissible length of the towline is veered out or visual monitoring shall be provided. It is recommended to install a towline counter.

6.5.3 The drums of the towing winches shall comply with the requirements of 6.1.6 and shall be provided with fairleads (apart from the cases of using a tow line of reduced length in accordance with 5.6.1 of Part III "Equipment, Arrangements and Outfit"). If two or more drums are provided, the fairleads shall be independent. Rope drum shall be fitted with a coupling to ensure its disconnection from the driving machinery.

Geometrical dimensions of the winch heads shall provide the possibility for paying out of the towline.

6.5.4 The design of the winch shall provide for quick releasing of the drum in order to ensure free paying-out of the towing line.

6.5.5 Brakes.

6.5.5.1 The towing winches shall be provided with an automatic brake ensuring holding of a line at a pull equal to at least 1,25 times the rated one when the driving energy disappears or is switched off.

6.5.5.2 The drum brake controlled by any type of energy shall be provided with manual control as well. The brake design shall ensure the possibility of quick releasing for the purpose of loosing paying out of the towline.

6.5.6 The towing winch elements situated in lines of force flow shall be checked for strength under the rated rope pull applied to the middle layer of winding. The reference stresses in the elements shall not exceed $0{,}4R_{eH}$ of the element material in this case.

6.5.7 The elements shall be checked for strength when the drum is affected by efforts corresponding to the maximum torque of the drive, as well as when the drum is affected by an effort equal to the towline breaking force on the upper layer of winding. The reference stresses in elements, which may be subjected to efforts caused by the above-mentioned loads, shall not exceed $0{,}95R_{eH}$ of the element material.

7 HYDRAULIC DRIVES

7.1 GENERAL

7.1.1 Connecting of hydraulic steering gear pipelines and those of the hydraulic power systems of CPP to other hydraulic systems is not permitted.

Connecting of pipelines of the engine-room trunk closures hydraulic drive systems to other hydraulic systems is not permitted.

In passenger ships and special purpose ships, the connection of the pipeline systems of power-operated sliding watertight doors to other hydraulic systems is not permitted.

7.1.2 Where the pipeline servicing hydraulic anchor machinery is connected to other hydraulic system pipelines, the latter shall be serviced by two separate pump units, each of which shall ensure the anchor gear operation with nominal pull and at nominal heaving-in speed.

7.1.3 The hydraulic system failure shall not cause the failure of machinery or arrangement.

7.1.4 Fluids to be used in the hydraulic systems shall be selected with regard to temperature conditions that may occur during operation (refer to Table 2.3.1-2, Part VII "Machinery Installations").

7.1.5 In passenger ships and special purpose ships, the hydraulic systems of power-operated sliding watertight doors may be centralized or independent for each door.

The centralized systems shall be provided with a low-level alarm for hydraulic fluid reservoirs serving the system and a low gas pressure alarm for hydraulic accumulators. Other effective means of monitoring loss of stored energy in hydraulic accumulators may be provided. These alarms shall be audible and visual and shall be situated on the operating console at the navigation bridge.

The centralized systems shall be designed to minimize the possibility of a failure in the operation of more than one door caused by damage to a single part of the system.

An independent hydraulic system for each sliding watertight door shall have a low gas pressure group alarm or other effective means of monitoring loss of stored energy in hydraulic accumulators, situated at the operating console on the navigation bridge. Loss of stored energy indication shall be provided at each local control station.

Besides, the hydraulic systems of power-operated sliding watertight doors in passenger ships and special purpose ships shall comply with the requirements of 7.12.5.7, Part III "Equipment, Arrangements and Outfit".

7.2 STRENGTH CALCULATION

7.2.1 The hydraulic machinery elements situated in lines of force flow shall be checked under the stresses corresponding to the working pressure. In this case, the reference stresses in elements shall not exceed $0{,}4R_{eH}$ of the element material.

7.2.2 In cases specified in 6.2.4.1, 6.3.4 and 6.4.2, the elements shall be checked for strength under the stresses corresponding to the opening pressure of the safety valves. In this case, the reference stresses in elements shall not exceed $0{,}95R_{eH}$ of element material.

7.2.3 The pipelines and valves of the hydraulic systems shall comply with the requirements specified in Sections 2, 4 and 5, Part VIII "Systems and Piping".

7.3 SAFETY AND OTHER ARRANGEMENTS

7.3.1 The hydraulic machinery shall be protected by safety valves, whice operating pressure shall not exceed 1,1 times the maximum rated pressure, except for the cases specified in 6.2.4.1, 6.3.4 and 6.4.2.

7.3.2 The working fluid from the safety valve shall be led to the drain pipeline or to the oil tank.

7.3.3 Arrangements for complete air expulsion when filling the machinery and the pipeline with the working fluid, as well as for leakage replenishment and drainage shall be provided.

7.3.4 The hydraulic systems shall be provided with the filters of appropriate capacity and filtration purity of the working fluid.

For continuously operating hydraulic systems (hydraulic steering gear, hydraulic couplings, etc.) provision shall be made for filter cleaning without interruption of the system operation.

7.3.5 Oil seals between fixed parts forming a part of external pressure limit shall be of "metal on metal" type.

Oil seals between moving parts forming a part of external pressure limit shall be doubled in such a way that the failure of one seal would not disable the executive actuator.

The alternative arrangements providing the equivalent leakage protection shall be agreed upon with the Register.

7.3.6 Hydraulic working cylinder rods that are heavity affected by dust and subject to icing shall be protected against such effects.

7.3.7 The hydraulic machinery shall be provided with a sufficient amount of the instruments to monitor its operation.

8 GAS TURBINES

8.1 GENERAL

8.1.1 Requirements of the Section apply to main and auxiliary marine gas turbines of 100 kW power and above. Application of these requirements to gas turbines of less than 100 kW power shall be performed in the scope agreed with the Register with due regard to the gas turbines purpose.

The present requirements cover converted aircraft, marine and stationary gas turbines, if installed aboard sea-going ships.

The field of applying the gas turbines covered by the present requirements is as follows:

displacement ships, high-speed craft;

dynamically supported ships;

mobile offshore drilling units (MODU) and fixed offshore platforms (FOP).

8.1.2 Design output refers to design conditions, i.e. specified values of ambient air and water temperatures, air humidity, atmospheric pressure and exhaust and suction resistance adopted for gas turbine design.

It is recommended that the following parameters shall be adopted as design conditions (in accordance with the requirements of ISO 2314):

air temperature, in °C, at gas turbine inlet — +15;

relative air humidity, in % — 60;

air pressure, in kPa — 100.

8.1.3 In ships of unrestricted service, at least two main gas turbines shall be used, while a possibility shall exist of the ship movement with one gas turbine in operation.

When a single gas turbine is employed, the necessity of application of the emergency device to ensure ship propulsion shall be agreed with the Register regarding ship′s structural features and purpose.

8.1.4 When water supply to the air cooler is completely shut off, the gas turbine with air intercooling shall develop an output not less than 20 % of the design value.

8.1.5 The gas turbine installation with a reversing device shall provide reversing from full ahead to full astern and vice versa (refer to 2.1.4, Part VII "Machinery Installations").

The gas turbine installation without a reversing device may be installed, if the ship is equipped with other means and devices to ensure astern running.

When the astern turbine is employed, the requirements of 3.1.2 and 3.6.2 shall be followed, for reverse-reduction gear, the requirements of 4.1.1 of the Part shall be complied with and in the case of CPP application, the requirements of 6.5.5, Part VII "Machinery Installations" shall be met.

When using the compressed air for the reverse systems, its store shall provide at least 25 resettings of the reverse. Refuelling of the compressed air store shall be performed automatically from at least two sources.

Connection of other consumers to the high pressure compressed air systems providing the operation of the reverse systems, protection of gas turbines, bridge control is prohibited.

8.1.6 The steady operation of the gas turbines without stalling and surging under all possible operating conditions, manoeuvring included, as well as the permissible deposits on gas turbines and under tropical conditions (air temperature not less than 45 °C, relative air humidity of 95 % at 35 °C and sea water temperature of 35 °C) shall be proved by calculations and tests.

Increases and drops of load shall be performed at the speed to ensure steady operation of gas turbine compressors throughout the operating range.

The program for testing the steady operation of the gas turbines shall be agreed with the Register in each case, and the control shall be performed both at the manufacturer's bench and after installation of the gas turbine on board.

8.1.7 Throughout the operating starting, there shall be no zones restricting the gas turbine operation due to vibrations. Normal vibrations shall not exceed the permissible values given in Section 9, Part VII "Machinery Installations".

8.1.8 For the gas turbines of **Arc6** to **Arc9** ice class ships, the requirements of 2.1.2, Part VII "Machinery Installations" shall be met, and where these requirements cannot be fulfilled, the loads on units transmitting the power from the gas turbine to the propeller shall be approved by the Register.

8.1.9 As starting devices, a.c. motors shall be used. The application of a.c. motors and starting devices of other types shall be agreed upon with the Register.

An opportunity shall be ensured of starting each gas turbine from at least two sources of power. The change-over from one source of power to the other for starting up the turbine shall be performed in not more than 60 s. For high-speed and dynamically supported craft, power supply from one source of power is permitted.

At least four successive starts of the gas turbine shall be possible. An opportunity shall be ensured for starting up the turbine before the rotor driven by the starting device has fully stopped.

8.1.10 When doped fuels leaving deposits of combustion products on gas turbine blades are used, provision shall be made for systems and means of cleaning the blading without stopping the turbine. A system for washing the stopped turbine to clean the turbine blades from deposits and the compressor blades from salt deposits shall be also provided.

The gas turbines of high-speed and dynamically supported craft may be cleaned and washed in port by means of shore appliances.

A cleaning or washing of the blading shall result in the restoration of the gas turbine parameters. The cleaning (washing) media shall not have a corrosive effect on the turbine blading and the surface of the exhaust gas boiler installed behind the turbine. The washing waste shall be discharged to special tanks.

The gas turbine washing medium shall be issued with a sanitary approval permitting its application aboard sea-going ships.

8.1.11 The air suction inlets of the gas turbines shall be fitted with filters to preclude speeds of depositing on the compressor blading dangerous for the normal operation of the gas turbines. The filter efficiency shall be tested at the same time as the ship delivery takes place.

The air inlets shall be so located as to prevent the entry of water, exhaust gas vapours and blowout from the fan into the compressor. Provisions shall be made for preventing the suction duct from icing, if the risk of icing exists under the ship operating conditions.

The reserve intake of 60 % of air volume shall be provided in case of icing of the suction.

For high-speed and dynamically supported craft, measures against icing and the reserve air intake need not be taken on agreement with the Register.

The air inlets shall not produce eddies at compressor intakes, which would make the compressor operation less stable under any operating conditions.

Drainage systems of air inlets shall be provided with hydroseals.

Quick-operating devices shall be provided for closing the air inlets.

8.1.12 Gas exhaust systems shall be provided with the remote-controlled arrangements to prevent air circulation through the gas turbine both in case of fire and when in port.

If one air duct or exhaust manifold is intended for two or more engines, gas and air recirculation through non-operating engines shall be prevented.

8.1.13 Air suction and gas exhaust trunks, fuel, refrigeration and other piping shall be connected to the engine so that no expansion stresses are transmitted to the place of connection.

Piping shall withstand vibration on levels generated during the gas turbine operation.

8.1.14 All the internal components of air ducts and trunks for air supply to compressors shall be manufactured from corrosion-resistant materials. The dimensions of the components and fastenings shall exclude the possibility of their penetration through the protective grating before the compressor. All inner mountings shall be fixed. The trunks and ducts shall provide the possibility of periodical checking of the condition of inner surfaces.

8.1.15 All turbochargers and gas turbines shall be fitted with a turning arrangement. Provision shall be made for interlocking the shaft-turning gear with the gas-turbine starting device or for an automatic disconnection of the shaft-turning gear.

Quick-disconnecting couplings shall be provided with interlocking excluding the starting up of the gas turbine with the reduction gear being disconnected.

8.1.16 Gas turbines for driving the emergency generator and fire pump shall be fitted with independent fuel, lubricating oil and cooling systems. In addition to automatic starting, manual starting from the local control station shall be provided.

8.1.17 To discharge the liquid fuel (or gas, if gas-operated) remaining in the gas turbine after failed starting or due to fuel leakage in the combustion chamber during standby condition, provision shall be made for "a cold start" (false starting without fuel supply) before each turbine starting.

The duration and number of the "cold starts" shall be sufficient for a complete discharge of unburnt fuel (gas) from the turbine.

8.1.18 To prevent lubricating oil vapour emission to the atmosphere, lubricating oil tanks shall be equipped with special separators discharging air into the exhaust gas duct (to gas vent section).

8.1.19 Each gas turbine shall be covered with a noise- and warmth-insulating case with the inner space aired by a special ventilator or as a result of exhaust gas ejection. The temperature of the outer surface of the case shall be in agreement with the sanitary norms. Shall be also ensured access to principal units and components for maintenance and examination of blading, compressors and combustion chambers with endoscopes.

To comply with sanitary norms for noise level in the machinery space, provision shall be made for noise muffling at air inlet and gas outlet of the turbine.

8.1.20 Each gas turbine shall have a fire extinguishing system independent of the other systems of the kind installed in the machinery space. Where several gas turbines are installed on board, provision shall be made for the transfer of the fire-extinguishing medium from the fire-extinguishing system of one gas turbine to those of the others. The amount of fire-extinguishing medium in the fire-extinguishing system shall be determined on the assumption of the inner volume of each gas turbine and the waste-heat boiler installed thereafter (if any) being filled. The gas turbine shall be equipped with two detectors pertinent to the fire-extinguishing system, one for the temperature of the environment beneath the noise - and warmth-insulating case and the other for the temperature of exhaust gases behind the turbine.

8.1.21 Fuel and lubricating oil piping shall be so arranged or equipped that in case of their rupture the leakage could not get on the hot surfaces of the gas turbine.

8.1.22 The spares available on board shall be in accordance with the requirements of Table 10.2.8, Part VII "Machinery Installations". The gas turbine manufacturer is entitled to furnish his own lists of spare parts proceeding from the operation record of the particular type of unit.

8.1.23 Where the turbines are converted for marine service, checks on service life shall be carried out on agreement with the Register.

8.2 GAS TURBINE ROTORS

8.2.1 The strength analysis of the gas turbine rotors shall be performed for the rated output condition and for conditions when the stresses can reach their maximum values. The check calculation of a turbine with overcapacity shall be made for a rotational speed by 20 per cent higher than the nominal one, and for the other rotors, the check calculation shall be made for a rotational speed exceeding the nominal speed by 10 %.

8.2.2 For the rotating parts of the gas turbine, the enlarged torque shall be analysed corresponding to the turbine operation at an ambient air temperature reduced by 20 °C lower as compared to the design temperature.

8.2.3 The strength calculation of rotating parts of the astern gas turbines shall be performed to the maximum torque corresponding to the crush stop from full ahead to full astern at the maximum capacity output of the astern turbine.

8.2.4 The strength calculation of the units transmitting power from the gas turbine to the electric generator drives shall be made on the basis of torque corresponding to the short-circuit condition, unless special sliding couplings are used in the "engine-generator" system.

8.2.5 The critical rotor speed shall be determined with regard to brackets and shall meet the requirements of 3.2.2. For overhanging rotors, precession calculation and additional loads from the gyroscopic moment shall be carried out.

8.2.6 The requirements of 3.2.3 to 3.2.5 shall be also complied with.

8.2.7 The dynamic stresses in the blades of compressors operating in the corrosive medium shall be experimentally determined by the manufacturer throughout operating ranges, including starting ranges, and the blading shall be so set that dangerous vibrations do not occur. The factor of fatigue strength of the blades shall not be less than 3 for the operating ranges or less than 2,5 for transient ranges. This requirement may be waived, if the gas turbine manufacturer supplies data on the reliability of the compressor blades in a corrosive medium with lower fatigue safety factors.

8.3 GAS TURBINE CASINGS

8.3.1 Special sight holes for inspection of the blading shall be provided in the casings of gas turbines and compressors, and the gas turbines shall be equipped with special instruments for inspection (endoscopes).

8.3.2 Where sleeve bearings are applied in the gas turbine, its casing shall be in accordance with the requirements of 3.3.7.

8.3.3 When the internal lagging of the gas turbine casing is applied, it shall be safely fastened and covered with a sheath in order to prevent local stripping of the casing surface and the contacts between the lagging and the blading.

8.3.4 The oil seal design shall be such as to prevent the lubricating oil and oil vapours from entering into the blading of the turbines and compressors, and the blow-out of oil and vapours outside.

8.3.5 Each gas turbine shall have drain holes in the lower point of the casing, which shall have spouts connected to leakage collecting tanks via open funnels so the turbine would not be flooded in case of the leakage collecting tank overfilling.

8.3.6 The casings shall ensure impenetrability for the case of rotor blade break.

8.4 GAS TURBINE BEARINGS

8.4.1 The sleeve bearings of the gas turbines shall comply with the requirements of 3.4.

8.4.2 For marine gas turbines irrespective of type, roller bearings may be used.

8.4.3 Each lubricating oil spout of the gas turbine supports shall be equipped with alarms for the presence of chips and with lubricating oil temperature sensors.

8.4.4 The application of inner bearings for three-bearing shafts shall be technically substantiated and agreed upon with the Register.

8.4.5 In any case, the gas turbine stop shall not damage the bearings. To this end, provision shall be made for lubricating oil supply in case of the turbine stop and for automatic activation of the rotor turning system.

8.5 COMBUSTION CHAMBERS

8.5.1 The arrangement of the combustion chamber design of the gas turbines shall provide the convenience of servicing and the possibility of replacement of burners and flame tubes at sea. The burners shall be inter-changeable without the necessity of a substantial adjustment of the fuel oil supply system.

8.5.2 The possibility of inspection shall be provided for the flame tubes of the combustion chambers with endoscopes without disassembling.

8.5.3 The entering of the fuel into the combustion chambers of the gas turbine, while the engine is out of action, shall be excluded.

8.5.4 High-pressure fuel oil piping and main burners shall be made clean of fuel after the turbine or burner shutdown.

Starting fuel oil piping and starting burners shall be made clean of fuel after the end of the starting condition.

Making clean of fuel shall be achieved by automatic opening of discharge valves on the relevant pipe.

8.5.5 The gas turbine shall be equipped with two igniters at least.

8.6 HEAT EXCHANGERS

8.6.1 The possibility of detection of leakages and the location of the damaged member by means of a pressure test shall be provided in the heat exchangers of the gas turbines (regenerators and gas coolers).

The regenerators shall be tested for tightness both on the gas and the air side. The method and procedure for detecting the leakages and damaged components, as well as disconnection thereof shall be set forth in special instructions.

8.6.2 Dangerous resonance vibrations and self-excited vibrations of the heat exchanger components shall be excluded.

8.6.3 The regenerator shall be provided with a fire extinguishing system in compliance with the requirements of item 11 of Table 3.1.2.1, Part VI "Fire Protection".

8.6.4 The air coolers of the gas turbines shall comply with the requirements of 1.5.6.

8.6.5 The air coolers shall provide for the possibility of the inspection and cleaning of the tube plates and muffling without removing the covers.

8.6.6 The air coolers shall be provided with arrangements for continuous removal of moisture falling out of the air during the gas turbine operation.

8.6.7 Besides, the heat exchangers shall be in accordance with the requirements of Sections 1, 2 and 6, Part X "Boilers, Heat Exchangers and Pressure Vessels" except for 6.3.1 to 6.3.4, 6.3.6.

8.7 CONTROL, PROTECTION AND REGULATION

8.7.1 The main gas turbine shall be provided with the automatic regulation and remote control systems ensuring the following:

.1 setting the necessary rates and steady maintaining thereof throughout the whole range of operating speeds so that thermal shocks are avoided;

.2 starting and stopping under any operating conditions;

.3 maintaining of steady operation of the compressors and combustion chambers under any transient service conditions and under load;

.4 preventing a sudden increase of gas temperature;

.5 unified control of the gas turbine and propeller by the single lever or hand wheel, preserving the possibility of separate control;

.6 restriction of torque at the power take-off shaft, where necessary;

.7 purging the combustion chambers of turbines and the offtake pipe from liquid or gaseous fuel oil accumulated there before ignition at start or after unsuccessful start (refer to 8.1.17).

The starting devices shall be designed so that the ignition process stops and the main fuel valve is closed at the ignition failure, protection being activated or gas turbine stop.

8.7.2 Each power turbine shall be provided with an overspeed device (on rotation speed) directly connected to the turbine shaft. The oil switch receiving the impulse from the propeller directly driven by

the turbine shaft may be used as an overspeed device, but it shall operate so that racing the turbine above the specified "maximum permissible" speed is not allowed.

The maximum permissible speed shall not exceed the rated speed by more than 15 %.

8.7.3 Main gas turbines transmitting power directly to the propeller shall have a speed governor besides the overspeed device, which shall limit the speed of the power turbine in case of load fluctuations before the overspeed device is actuated.

The speed governor shall be so adjusted that the power turbine rotation speed would not exceed the rated rotation speed by more than 8 %.

If fuel supply is reduced by the governor, stopping of the gas turbine is not permitted.

Generator-driving gas turbines shall have their speed governors in compliance with the requirements of 2.11.3 to 2.11.5.

8.7.4 The main gas turbine shall provide the standby "crush stop" condition ready for immediate use for at least 60 min ensuring beginning of ship's movement immediately after receiving the command. In a "crush stop" condition the speed of the propeller shaft shall not exceed 3 min^{-1}.

Unlimited readiness of the gas turbine for immediate use for at least 20 min shall ensure within this period the possibility for heating of the gas turbine, its starting, as well as beginning of ship's movement.

8.7.5 The requirements of 2.4, Part XV "Automation" shall be met.

8.7.6 Main and auxiliary gas turbines shall be fitted with an arrangement for emergency stopping under any operating conditions by at least two independent means.

When operating from the bridge control at the wheelhouse, provision shall be made for an emergency stopping of the gas turbine from the control station in the engine room in close proximity to the turbine.

8.7.7 The manoeuvring arrangement of the gas turbine installation with an astern turbine shall comply with the requirements of 3.6.1 and 3.6.2. The manoeuvring ahead and astern valves shall be interlocked. Irrespective of the position of manoeuvring valves, the operation of the gas turbine compressors shall be sufficiently stable.

The gas turbine installation shall be provided with a local control station for the astern turbine.

8.7.8 In addition to the overspeed device operation, the gas turbine protection system shall provide full interruption of fuel supply in case of alarm for the following parameters:

.1 lubricating oil pressure drop in the system below the permissible level;

.2 gas temperature rise above the permissible level before or after the turbine;

.3 limit level of vibration;

.4 flame-out;

.5 excess of revolutions of a low pressure compressor exceeding permissible value (for three-shaft gas turbines with a free-propeller turbine and gas reverse);

.6 limiting axial rotor shift;

.7 dangerous air pollution of the machinery and boiler room, if gas-operated.

In case of emergency, the provision shall be made for the manual interruption of fuel supply from the local control station in the vicinity of the gas turbine.

Proceeding from the gas turbine design, the manufacturer may introduce additional types of protection.

8.7.9 Automated main gas turbines shall comply with the requirements of Part XV "Automation".

8.7.10 The gas turbine control system shall also comply with the requirements of 2.5, 3.1 to 3.3, Part VII "Machinery Installations".

8.7.11 The working medium of the control system shall not become viscous at low temperatures or be readily flammable.

The filter and heat exchanger system shall provide the necessary temperature and purity of the working medium.

8.7.12 For main gas turbines, provision shall be made for monitoring the readings of permanent tachometers.

8.7.13 The control systems of gas turbines intended for driving generators shall be in compliance with the requirements of 2.11.3 to 2.11.7.

8.8 INSTRUMENTATION

8.8.1 The control station of the main gas turbine shall be provided with instruments for measuring parameters in accordance with 8.7.9, with devices specified in 3.7.2.2 to 3.7.2.4, as well as instruments to carry out thermal check of the gas turbine operation.

8.8.2 The control stations of the auxiliary gas turbines shall be provided with instruments to measure the following parameters:

.1 rotor rotation speed;

.2 lubricating oil pressure at the gas turbine inlet;

.3 fuel oil pressure at the gas turbine inlet;

.4 lubricating oil temperature at the gas turbine inlet;

.5 gas temperature at turbine inlet or outlet.

8.8.3 Where the main gas turbine is provided with a system for monitoring and preventive diagnostics, the number of parameters within such a system shall be agreed upon with the Register.

8.9 WASTE-HEAT CIRCUIT OF GAS TURBINE

8.9.1 Where the gas turbine units are provided with waste-heat circuits, the steam turbine shall be in compliance with the requirements of Section 3 of the present Part and the waster heat boiler shall comply with the requirements of Part X "Boilers, Heat Exchangers and Pressure Vessels".

8.9.2 The waster-heat circuits shall be provided with systems to ensure evacuation in condensers before or during the gas turbine start.

Condensers shall be provided with protection against pressure rising above permissible values.

8.9.3 At the beginning of the rotor rotation, provision shall be made for an automatic disconnection of the shaft-turning gear of the steam turbine.

8.9.4 In case two gas turbines with wasteheat circuits are installed in a twin-shaft ship, an operating mode is permitted with the shaft on one side being driven by the gas turbine and the shaft on the other side being driven by the steam turbine.

In this case, quick disconnecting clutches shall be used, which serviceability shall be tested by the special program approved by the Register.

8.9.5 Steam turbine plants working on waste steam shall comply with the requirements of Sections 17 to 19, Part VIII "Systems and Piping".

8.10 NATURAL GAS FIRED TURBINES

8.10.1 Requirements of the Chapter cover the gas turbines installed on board gas carriers and using the vapours of the natural gas (methane) carried as fuel. For this purpose, the gas carrier shall be provided with an installation to prepare the gas vapours for using in the gas turbine.

8.10.2 Natural gas fired turbines are subject to the requirements of 8.1 to 8.9.

8.10.3 Natural gas is used to start the turbine and operate it in all modes.

8.10.4 The gas fuel supplied to the turbine shall not include any liquid fraction.

8.10.5 Gas fuel supply piping shall comply with the requirements of 13.12, Part VIII "Systems and Piping".

8.10.6 For gas-fired operation, the requirements of 2.4, Part XV "Automation" shall be met.

8.10.7 In case of stop of gas fuel supply, the gas turbine shall be shut down automatically by means of a quick shut-off valve fitted as near to the gas turbine as possible.

8.10.8 A manual gas fuel shut-off device shall be provided directly at the gas turbine. Besides, manual shutdown shall be possible from several locations in the engine room, from a space other than the engine room and from the navigation bridge.

8.10.9 In the engine room, an alarm shall be provided for the maximum permissible gas concentration corresponding to 30 % of the lower flammability limit, with an alarm to be installed at the main machinery control room.

The gas supply to the turbine shall be shut off automatically with the gas concentration in the machinery space reaching 60 % of the lower flammability limit. The requirement of 8.4.5 shall also be met.

8.10.10 Gas turbine operation using two types of fuel (liquid and gas fuel) requiring special fuel equipment to be installed shall be RS approved.

9 DUAL-FUEL INTERNAL COMBUSTION ENGINES

9.1 GENERAL

9.1.1 The requirements of the present Section are applicable to dual-fuel internal combustion engines (DF-engines) with ignition from compression, operated on liquid fuel and natural gas (methane). The requirements of 9.2.2, 9.2.3 are applicable to engines operating on gas with a maximum working gas pressure of more than 1,0 MPa. The requirements of 9.2.2, 9.2.3 are applicable to engines operating on gas with a maximum working gas pressure of more than 1,0 MPa.

9.1.2 Individual requirements relevant to the application of the DF-engines are given in 4.2.10, Part VII "Machinery Installations" and in 5.5.1 of the present Part.

9.2 CONDITIONS OF OPERATION ON TWO KINDS OF FUEL

9.2.1 When operated on two kinds of fuel DF-engines shall be equipped with the arrangement for supply of starting fuel with further supply of gas fuel. The possibility of quick change-over from gas fuel to liquid fuel shall be provided.

Starting fuel shall be supplied to each cylinder in all operation modes of the DF-engines.

9.2.2 Start of DF-engines, astern operation shall be carried out on liquid fuel only.

9.2.3 When DF-engine is run on variable modes, ships maneuvering, mooring operations, only liquid fuel shall be used.

9.2.4 In case of unexpected gas fuel cut off DF-engine shall continue operation on liquid fuel without stop.

9.2.5 DF-engines shall be provided with sensors for blocking simultaneous feed of gas fuel and complete supply of liquid fuel.

9.3 CRANKCASE PROTECTION

9.3.1 Crankcases of DF-engines shall be fitted with safety valves in way of each crankshaft crank. Design and actuating pressure of the safety valves shall be specified with due regard to the possible explosion of gas fuel leakage accumulated in the crankcase.

9.3.2 When a trunk-piston engine is used as the DF-engine, the crankcase shall be protected as follows:

.1 to prevent accumulation of gas fuel leakage, the ventilation of crankcases shall be provided. Air pipe ends shall be led to safety place and fitted with flame arresters;

.2 detectors of gas fuel leakage or any other equivalent equipment shall be installed. Device for automatic admission of inert gas is recommended for installation;

.3 mounting of oil mist concentration sensor in the crankcase shall be provided.

9.3.3 When a cross-head type engine is used as the DF-engine, the engine crankcase shall be equipped with oil mist concentration sensor or temperature control system of the engine bea-rings.

9.4 PROTECTION OF SUB-BEARING SPACES OF THE CROSS-HEAD TYPE DF-ENGINES

9.4.1 Sub-bearing spaces shall be provided with gas fuel leakage detectors or any other equivalent devices.

9.5 INTAKE AND EXHAUST GAS SYSTEMS

9.5.1 Intake piping and supercharging air receivers as well as exhaust gas collectors shall be fitted with safety valves or other protective devices. For engines operating on gas with a maximum working gas pressure of not more than 1,0 MPa, the use of other design solutions is allowed provided that proving calculations or experimental data are provided. For engines operating on gas with a maximum working gas pressure of not more than 1,0 MPa, the use of other design solutions is allowed provided that proving calculations or experimental data are provided.

9.5.2 Exhaust gas pipelines from DF-engines shall not be combined with exhaust gas piping from other engines, boilers or incinerators.

9.5.3 The exhaust gas piping shall be provided with effective means of blowing off.

9.6 STARTING AIR PIPING

9.6.1 Branch pipes of starting air piping laid to each cylinder shall be equipped in compliance with the requirements of 2.9.2.

9.7 COMBUSTION CONTROL

9.7.1 The range of combustion control shall be determined and presented for approval with due regard to the analysis of the origin of failures and their consequences for all the elements of DF-engines affecting the combustion process.

The minimum range of control, types of automatic protection and parameter limit values are given in Table 9.7.1.

Table 9.7.1

No.	Controlled parameter or DF-engine component	Measurement point or monitoring conditions	Parameter limit values (alarm) or fault symptoms	Automatic shut-off of the gas fuel supply valves	Indication in main machinery control room
1	Gas fuel injection valves and starting oil fuel injectors	Each cylinder	Seizing of gas fuel injection valve in open condition	X	Constantly
		At each cylinder outlet	Ignition failure		
2	Exhaust gas temperature	Deviation from average	max	X	Constantly
		In each cylinder	max	X	Constantly
3	Combustion pressure	Deviation from average	max	X	On call
4	Gas fuel supply pressure	At engine inlet	min	X	Constantly

9.8 GAS FUEL SUPPLY

9.8.1 At the inlet of gas fuel supply collector to the DF-engine cylinders the flame arrester shall be fitted.

9.8.2 An arrangement for manual cut-off the gas fuel supply to the DF-engine from the local control station shall be provided.

9.8.3 Gas fuel supply piping shall meet the requirements of 13.12, Part VIII "Systems and Piping".

9.8.4 The connection of the engine gas collector with the ship gas piping shall provide the necessary flexibility.

9.8.5 The connection of the gas fuel supply collector to the gas fuel injection valves shall provide complete coverage by the protection pipes or ducts.

9.9 GAS FUEL SUPPLY CUT-OFF

9.9.1 Gas fuel supply cut-off to DF-engines by means of automatic closing of valves on the engine shall be performed when the DF-engine has stopped due for any unknown reason or in cases stated in 9.3.2.2, 9.3.2.3, 9.3.3, 9.4.1, 9.7.1 of the present Part, and 13.12.2 or 13.12.3, Part VIII "Systems and Piping".

9.9.2 It is advisable that the main cut-off valve for gas fuel supply to the collector could be automatically closed at the failure of gas fuel feed valves to DF-engine combustion chambers (refer to 9.7.1 of the present Part and 13.12.6, Part VIII "Systems and Piping").

9.9.3 Gas fuel supply to DF-engines shall be auto-matically terminated when the concentration of gas in the engine room reaches 60 % of the lower inflammability level. The requirements of 9.2.4 shall be met.

Российский морской регистр судоходства

Правила классификации и постройки морских судов
Часть IX
Механизмы

Russian Maritime Register of Shipping

Rules for the Classification and Construction of Sea-Going Ships
Part IX
Machinery

The edition is prepared
by Russian Maritime Register of Shipping
8, Dvortsovaya Naberezhnaya,
191186, St. Petersburg,
Russian Federation
www.rs-class.org/en/